DELTA OPEL ISUZU SUZUKI

Accessories
Clutch
Propshaft
Electrical
Cab
Steering
Axle
Brakes
Wheels
Frame
Aircon
Fuel
Cooling

INDEX

ISUZU KB TF 140 Workshop Manual

Engine
F Suspension
R Suspension
Gearbox - MSG
Gearbox - MUA
Eng. Electrical

INDEX

General Information
Maintenance and Lubrication

Heating and Airconditioning

Frame and Bumper
Sheetmetal

Body Electrical

Front Alignment
Steering (Manual&Power)
Front Suspension
Rear Suspension
Wheels and Tyres

Engine - Diesel
Diagnosis
Mechanical
Cooling
Fuel
Electrical
Exhaust

Engine - Petrol
Diagnosis
Mechanical
Cooling
Fuel
Electrical
Exhaust

Transmission
MUA
MSG
Clutch

Accessories

Cab

Axle
Propshaft
Rear Axle
Diff Lock

ISUZU

KB - SERIES

WORKSHOP MANUAL

SECTION 0A

GENERAL INFORMATION

SECTION 0A
GENERAL INFORMATION

TABLE OF CONTENTS

PAGE

General Repair Instructions ..... 0A— 2
Notes on The Format of This Manual ..... 0A— 3
Identification ..... 0A— 6
Lifting Instructions ..... 0A— 7
Conversion Table ..... 0A— 9

GENERAL REPAIR INSTRUCTIONS

1. Park the vehicle on level ground and chock the front or rear wheels before lifting the vehicle.
2. Raise the vehicle with a jack set against the axle or the frame.
3. Support the vehicle on chassis stands.
4. Use covers on the vehicle body, seats, and floor to prevent damage and/or contamination.
5. Disconnect the grounding cable from the battery before performing service operations.
   This will prevent cable damage or burning due to shortcircuiting.
6. Handle brake fluid and antifreeze solution with great care.
   Spilling these liquids on painted surfaces will damage the paint.
7. The use of the proper tool(s) and special tools where specified is essential to efficient, reliable, and safe service operations.
8. Always use genuine ISUZU replacement parts.
9. Discard used cotter pins, gaskets, O-rings, oil seals, lock washers, and self-locking nuts at disassembly.
   Normal function of these parts cannot be guaranteed if they are reused.
10. Prepare new cotter pins, gaskets, O-rings, oil seals, lock washers, and self-locking nuts for installation.
11. Keep the disassembled parts neatly in groups.
    This will facilitate smooth and correct reassembly.
12. Keep fixing nuts and bolts separate.
    Fixing nuts and bolts vary in hardness and design according to installation position.
13. Clean all parts before inspection or reassembly.
14. Clean the oil ports and other openings with compressed air to make certain that they are free from dirt and obstructions.
15. Lubricate the rotating and sliding faces of all moving parts with oil or grease before installation.
16. Use the recommended liquid gasket to prevent leakage.
17. Carefully observe all nut and bolt torque specifications.
18. When removing or replacing parts that require refrigerant to the discharged Air conditioning system, be sure to use the Vehicle Refrigerant Recovery and Recycling Equipment (VRRRE) to recover and recycle Refrigerant-12, to promote the movement for the protection of the ozone layer covering the earth.
19. Check and recheck your work. No service operation is completed until you have done this.

NOTES ON THE FORMAT OF THIS MANUAL

1. Find the applicable Section by referring to the index at the front of the Workshop Manual binder.
2. The following technical service information is included in this Section:
   - Identification
   - Maintenance schedules
   - Recommended lubricants
   - Recommended fuels
   - Oil viscosity charts
3. Individual Sections of this Workshop Manual are divided into the following categories:
   - Main data and specifications
   - Torque specifications
   - Recommended liquid gasket
   - Loctite application procedure
   - Servicing
   - Removal and installation
   - Disassembly
   - Inspection and repair
   - Reassembly
   - Troubleshooting
4. Each "Major Components" page of this Workshop Manual has an exploded view of the applicable area A brief explanation of the notation used follows:

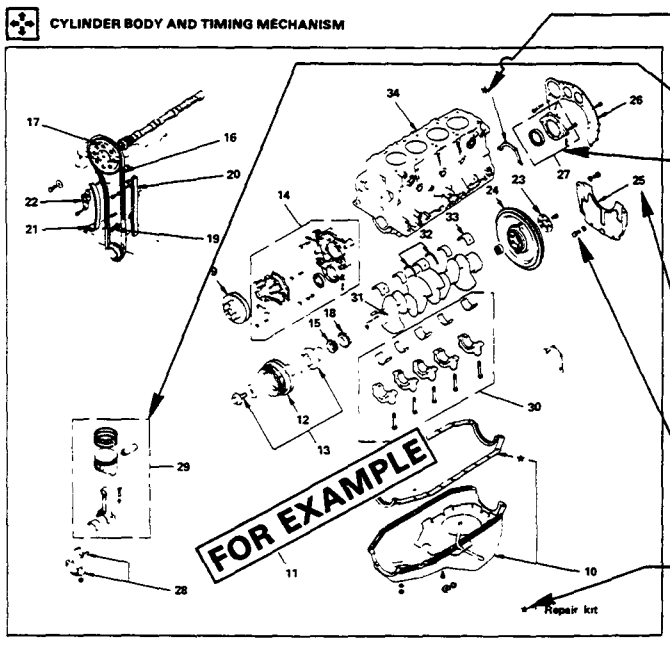

Disassembly steps-2

9	Fan pulley	22	Automatic adjuster
10	Oil pan and gasket	23	Washer, flywheel
▲11	Oil pipe	24	Flywheel
12	Crank pulley	25	Belt housing cover
13	Boss, and bolt	26	Rear plate
14	Front cover assembly with water pump and oil pump	27	Rear oil seal retainer
15	Pinion, oil pump	28	Caps, connecting rod with bearings
16	Timing chain	29	Piston and connecting rod with bearings
17	Camshaft sprocket	▲30	Caps, crankshaft with bearings
18	Timing wheel, crankshaft	31	Crankshaft assembly
19	Oil jet	32	Thrust washer
20	Timing chain guide	33	Bearings crankshaft
21	Timing chain tensioner	34	Cylinder body assembly

Parts marked with an asterisk (★) are included in the Repair Kit.

Parts within a square frame are to be removed and installed as a single unit. Unit disassembly and reassembly steps, where required, are provided in the Manual.

This number represents the service operation sequence.

The removal of unnumbered parts is unnecessary unless replacement is required.

★ Indicates repair kit availability.

The parts listed under "Disassembly Steps" and "Reassembly Steps" are in sequence. Steps marked with a triangle (▲) are important operations. Detailed information appears in the text.

5. Below is a sample of the Workshop Manual text following the "Major Components" page.
   A brief explanation of the notation used follows:

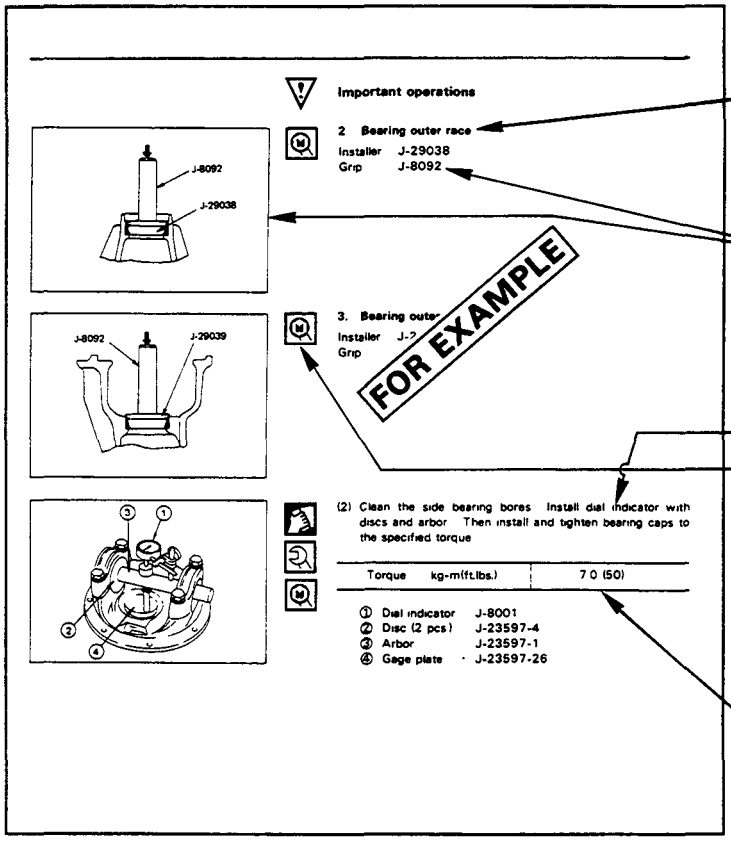

This is the item shown in the illustration. It is marked with a triangle (▲) on the "Major Components" page.

Special or recommended tools are identified by the tool name and/or number.
The illustration shows how the tool is to be used.

Letters and numbers within a circle refer to identically labeled parts or measurements in the illustraion.

This symbol indicates the type of service operation to be performed.
A more detailed explanation of the various symbols follows.

This table gives important service specifications and data.

6. The following symbols appear throughout the Workshop Manual.
   They tell you at a glance the type of service operation to perform.

. . . Removal

. . . Installation

. . . Disassembly

. . . Reassembly

. . . Alignment

. . . Directional indication

. . . Inspection

. . . Measurement

. . . Adjustment

. . . Cleaning

. . . Important operation requiring extra care

. . . Specified torque

. . . ISUZU special tool(s) required or recommended

. . . Other special tool(s) required or recommended

. . . Lubrication (Oil)

. . . Lubrication (Grease)

. . . Liquid gasket application

7. Measurement criteria are defined by the terms "standard" and "limit".
   A measurement falling within the "standard" range indicates that the applicable part or parts are serviceable.
   "Limit" is an absolute value.
   A measurement falling outside the "limit" indicates that the applicable part or parts must be repaired or replaced.

8. Components and parts are listed in the singular form throughout the Workshop Manual.

9. The following directional criteria are used throughout the Workshop Manual:

   Front:
   The cooling fan side of the engine.
   Right:
   The right-hand side of the engine viewed from the flywheel.
   Left:
   The left-hand side of the engine viewed from the flywheel.
   Rear:
   The flywheel side of the engine.

   Cylinder numbers are counted from the front of the engine towards the rear.
   The engine's rotation is clockwise viewed from the front of the engine.

IDENTIFICATION

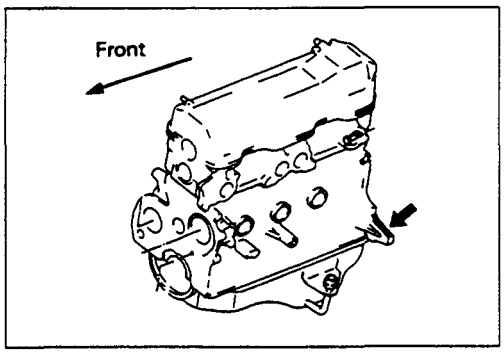

ENGINE NUMBER (PETROL ENGINE, 4Z SERIES)

The engine number stamped on the rear left-hand side of the cylinder body.

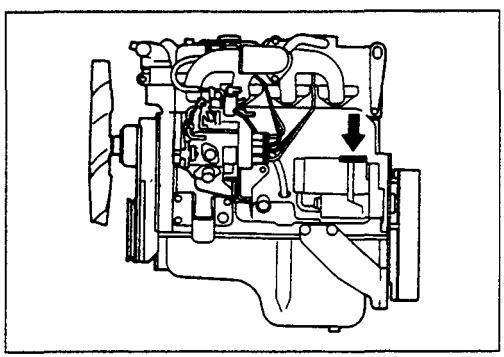

ENGINE NUMBER (DIESEL ENGINE, 4J & C SERIES)

The engine number is stamped on the rear left-hand side of the cylinder body.

VEHICLE IDENTIFICATION PLATE

The vehicle identification plate is attached to the left hand firewall upper in the engine compartment.

LIFTING INSTRUCTIONS

If a lifting device other than the original jack is used, it is most important that the device be applied only to the correct lifting points. (See the illustration.) Raising the vehicle from any other point may result in serious damage.

Lifting Points and Supportable Point-Locations

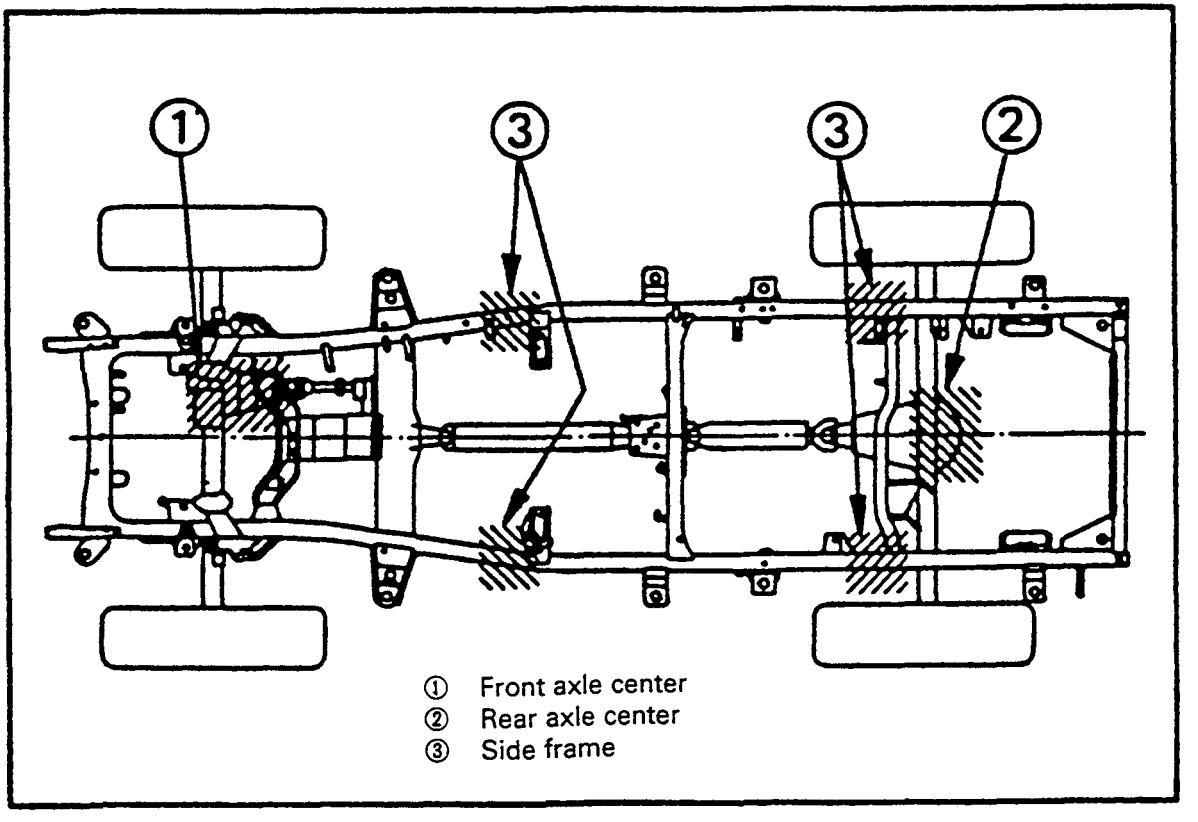

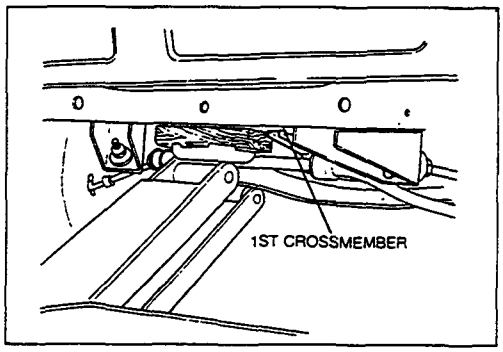

LIFTING POINT; FRONT

4×2 model

- When using floor jack, lift on the center of the 1st crosmember.

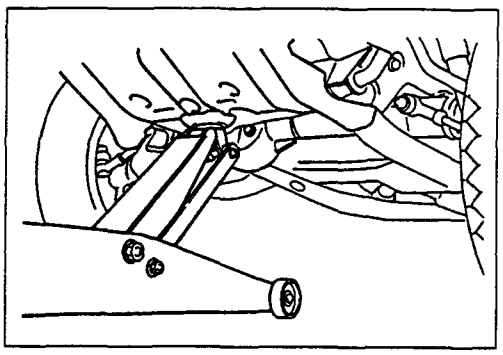

4×4 model

- When using floor jack, lift on the center of the skid plate.

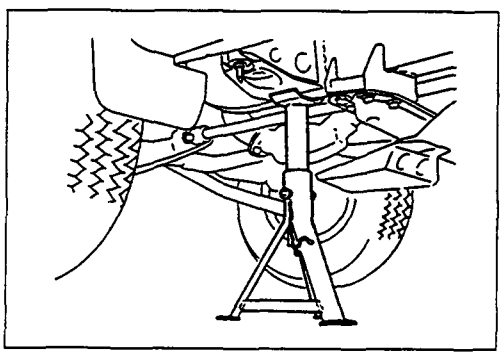

SUPPORTABLE POINT; FRONT

- Position the chassis stands at the bottom of the frame sidemember, backward of front wheel.

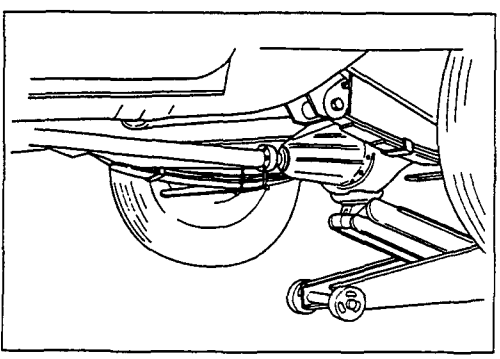

LIFTING POINT; REAR

- Position the floor jack at the center of the rear axle case when lifting the vehicle.

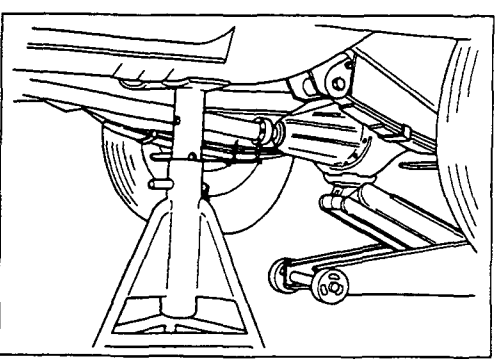

SUPPORTABLE POINT; REAR

- Position the chassis stands at the bottom of the frame sidemember, forward of the rear wheel.

CONVERSION TABLE

TABLE OF CONTENTS

	PAGE
Length	0A— 9
Area	0A—11
Volume	0A—11
Mass	0A—13
Pressure	0A—14
Torque	0A—15
Temperature	0A—16

LENGTH

MILLIMETERS TO INCHES

mm	in	mm	in.	mm	in	mm	in
1	0.0394	26	1.0236	51	2.0079	76	2.9921
2	0.0787	27	1.0630	52	2.0472	77	3.0315
3	0.1181	28	1 1024	53	2 0866	78	3.0709
4	0 1575	29	1.1417	54	2.1260	79	3.1102
5	0.1969	30	1.1811	55	2.1654	80	3.1496
6	0.2362	31	1.2205	56	2.2047	81	3.1890
7	0.2756	32	1.2598	57	2.2441	82	3.2283
8	0 3150	33	1.2992	58	2.2835	83	3.2677
9	0.3543	34	1.3386	59	2.3228	84	3.3071
10	0.3937	35	1.3780	60	2.3622	85	3.3465
11	0.4331	36	1.4173	61	2.4016	86	3.3858
12	0.4724	37	1.4567	62	2.4409	87	3.4252
13	0.5118	38	1 4961	63	2.4803	88	3.4646
14	0.5512	39	1.5354	64	2.5197	89	3.5039
15	0.5906	40	1.5748	65	2.5591	90	3.5433
16	0.6299	41	1.6142	66	2.5984	91	3.5827
17	0.6693	42	1.6535	67	2.6378	92	3.6220
18	0.7087	43	1.6929	68	2.6772	93	3.6614
19	0.7480	44	1 7323	69	2 7165	94	3.7008
20	0.7874	45	1 7717	70	2 7559	95	3.7402
21	0.8268	46	1.8110	71	2.7953	96	3.7795
22	0.8661	47	1.8504	72	2.8346	97	3.8189
23	0.9055	48	1.8898	73	2.8740	98	3.8583
24	0.9449	49	1 9291	74	2.9134	99	3.8976
25	0 9843	50	1.9685	75	2.9528	100	3 9370
101	3.9764	111	4.3701	121	4.7638	131	5 1575
102	4.0157	112	4.4094	122	4.8031	132	5.1968
103	4.0551	113	4.4488	123	4.8425	133	5.2362
104	4.0945	114	4.4882	124	4.8819	134	5.2756
105	4.1339	115	4.5276	125	4.9213	135	5.3150
106	4.1732	116	4.5669	126	4.9606	136	5.3543
107	4.2126	117	4.6063	127	5.0000	137	5 3937
108	4.2520	118	4.6457	128	5.0394	138	5 4331
109	4.2913	119	4.6850	129	5 0787	139	5.4724

INCHES TO MILLIMETERS

in	mm	in.	mm
1/64	0 3969	33/64	13.0969
1/32	0 7938	17/32	13.4938
3/64	1.1906	35/64	13.8906
1/16	1 5875	9/16	14.2875
5/64	1.9844	37/64	14.6844
3/32	2.3813	19/32	15.0813
7/64	2.7781	39/64	15 4781
1/8	3 1750	5/8	15 8750
9/64	3.5719	41/64	16 2719
5/32	3.9688	21/32	16.6688
11/64	4 3656	43/64	17.0656
3/16	4 7625	11/16	17.4625
13/64	5.1594	45/64	17.8594
7/32	5.5563	23/32	18.2563
15/64	5.9531	47/64	18 6531
1/4	6 3500	3/4	19 0500
17/64	6.7469	49/64	19 4469
9/32	7.1438	25/32	19.8438
19/64	7 5406	51/64	20.2406
5/16	7.9375	13/16	20.6375
21/64	8.3344	53/64	21 0344
11/32	8.7313	27/32	21.4313
23/64	9 1281	55/64	21.8281
3/8	9.5250	7/8	22 2250
25/64	9.9219	57/64	22.6219
13/32	10.3188	29/32	23.0188
27/64	10.7156	59/64	23.4156
7/16	11.1125	15/16	23 8125
29/64	11.5094	61/64	24 2094
15/32	11.9063	31/32	24 6063
31/64	12 3031	63/64	25 0031
1/2	12 7000	1	25.4000

LENGTH

FEET TO METERS

ft.	0	1	2	3	4	5	6	7	8	9	ft.
	m	m	m	m	m	m	m	m	m	m	
—		0.305	0.610	0.914	1.219	1.524	1.829	2.134	2.438	2.743	—
10	3.048	3.353	3.658	3.962	4.267	4.572	4.877	5.182	5.486	5.791	10
20	6.096	6.401	6.706	7.010	7.315	7.620	7.925	8.230	8.534	8.839	20
30	9.144	9.449	9.754	10.058	10.363	10.668	10.973	11.278	11.582	11.887	30
40	12.192	12.497	12.802	13.106	13.411	13.716	14.021	14.326	14.630	14.935	40
50	15.240	15.545	15.850	16.154	16.459	16.764	17.069	17.374	17.678	17.983	50
60	18.288	18.593	18.898	19.202	19.507	19.812	20.117	20.422	20.726	21.031	60
70	21.336	21.641	21.946	22.250	22.555	22.860	23.165	23.470	23 774	24.079	70
80	24.384	24.689	24.994	25.298	25.603	25.908	26.213	26.518	26.822	27.127	80
90	27.432	27.737	28.042	28.346	28.651	28.956	29.261	29.566	29.870	30.175	90
100	30 480	30.785	31.090	31.394	31.699	32.004	32.309	32.614	32.918	33.223	100

METERS TO FEET

m	0	1	2	3	4	5	6	7	8	9	m
	ft.	ft.	ft.	ft.	ft.	ft.	ft.	ft.	ft.	ft.	
—		3.2808	6.5617	9.8425	13.1234	16.4042	19.6850	22.9659	26.2467	29.5276	—
10	32.8084	36.0892	39.3701	42.6509	45.9318	49.2126	52.4934	55.7743	59.0551	62.3360	10
20	65.6168	68.8976	72.1785	75.4593	78.7402	82.0210	85.3018	88.5827	91.8635	95.1444	20
30	98.4252	101.7060	104.9869	108.2677	111.5486	114.8294	118.1102	121.3911	124.6719	127.9528	30
40	131.2336	134.5144	137.7953	141.0761	144.3570	147.6378	150.9186	154.1995	175.4803	160.7612	40
50	164.0420	167.3228	170.6037	173.8845	177.1654	180.4462	183.7270	187.0079	190.2887	193.5696	50
60	196.8504	200.1312	203.4121	206.6929	209.9738	213.2546	216.5354	219.8163	223.0971	226.3780	60
70	229.6588	232.9396	236.2205	239.5013	242.7822	246.0630	249 3438	252.6247	255.9055	259.1864	70
80	262.4672	265.7480	269.0289	272.3097	275.5906	278.8714	282.1522	285.4331	288.7139	291.9948	80
90	295.2756	298.5564	301.8373	305.1181	308.3990	311.6798	314.9606	318.2415	321.5223	324.8032	90
100	328.0840	331.3648	334.6457	337.9265	341.2074	344.4882	347.7690	351.0499	354.3307	357.6116	100

MILES TO KILOMETERS

miles	0	1	2	3	4	5	6	7	8	9	miles
	km	km	km	km	km	km	km	km	km	km	
—		1.609	3.219	4.828	6.437	8.047	9.656	11.265	12.875	14.484	—
10	16.093	17.703	19.312	20.921	22.531	24.140	25.750	27.359	28.968	30.578	10
20	32.187	33.796	35.406	37.015	38.624	40.234	41.843	43.452	45.062	46.671	20
30	48.280	49.890	51.499	53.108	54.718	56.327	57.936	59.546	61.155	62.764	30
40	64.374	65.983	67.592	69.202	70.811	72.420	74.030	75.639	77.249	78.858	40
50	80.467	82.077	83.686	85.295	86.905	88.514	90.123	91.733	93.342	94.951	50
60	96.561	98.170	99.779	101.389	103.000	104.607	106.217	107.826	109.435	111.045	60
70	112.654	114.263	115.873	117.482	119.091	120.700	122.310	123.919	125.529	127.138	70
80	128.748	130.357	131.966	133.576	135.185	136.794	138.404	140.013	141.622	143.232	80
90	144.841	146.450	148.060	149.669	151.278	152.888	154.497	156.106	157.716	159.325	90
100	160.934	162.544	164.153	165.762	167.372	168.981	170.590	172.200	173.809	175.418	100

KILOMETERS TO MILES

km	0	1	2	3	4	5	6	7	8	9	km
	miles	miles	miles	miles	miles	miles	miles	miles	miles	miles	
—		0.621	1.243	1.864	2.485	3.107	3.728	4.350	4.971	5.592	—
10	6.214	6.835	7.456	8.078	8.699	9.321	9.942	10.563	11.185	11.806	10
20	12.427	13.049	13.670	14.292	14.913	15.534	16.156	16.777	17.398	18.020	20
30	18.641	19.262	19.884	20.505	21.127	21.748	22.370	22.990	23.612	24.233	30
40	24.855	25.476	26.098	26.719	27.340	27.962	28.583	29.204	29.826	30.447	40
50	31.065	31.690	32.311	32.933	33.554	34.175	34.797	35.418	36.039	36.661	50
60	37.282	37.904	38.525	39.146	39.768	40.389	41.010	41.632	42.253	42.875	60
70	43.496	44.117	44.739	45.360	45.981	46.603	47.224	47.845	48.467	49.088	70
80	49.711	50.331	50.952	51.574	52.195	52.816	53.438	54.059	54.681	55.302	80
90	55.923	56.545	57.166	57.187	58.409	59.030	59.652	60.273	60.894	61.516	90
100	62.137	62.758	63.380	64.001	64.622	65.244	65.865	66.487	67.108	67.729	100

AREA

SQUARE INCHES TO SQUARE CENTIMETERS

in²	0	1	2	3	4	5	6	7	8	9	in²
	cm²	cm²	cm²	cm²	cm²	cm²	cm²	cm²	cm²	cm²	
—		6.452	12.903	19 355	25.806	32.258	38.710	45.161	51.613	58.064	—
10	64.516	70.968	77.419	83.871	90.322	96.774	103.226	109.677	116.129	122.580	10
20	129.032	135.484	141.935	148.387	154.838	161.290	167.742	174.193	180.645	187.096	20
30	193.548	200.000	206.451	212.903	219.354	225.806	232.258	238.709	245.161	251.612	30
40	258.064	264.516	270.967	277.419	283.870	290.322	296.774	303.225	309.677	316.128	40
50	322.580	329.032	335.483	341.935	348.386	354.838	361.290	367.741	374.193	380.644	50
60	387.096	393.548	399.999	406.451	412.902	419.354	425.806	432.257	438.709	445.160	60
70	451.612	458.064	464.515	470.967	477.418	483.870	490.322	496 773	503.225	509.676	70
80	516.128	522.580	529.031	535.483	541.934	548.386	554.838	561.289	567.741	574.192	80
90	580.644	587.096	593.547	599.999	606.450	612.902	619 354	625.805	632.257	638.708	90
100	645.160	651.612	658.063	664.515	670.966	677.418	683.870	690.312	696.773	703.224	100

SQUARE CENTIMETERS TO SQUARE INCHES

cm²	0	1	2	3	4	5	6	7	8	9	cm²
	in²	in²	in²	in²	in²	in²	in²	in²	in²	in²	
—		0.155	0.310	0.465	0.620	0.775	0.930	1.085	1.240	1.395	—
10	1.550	1.705	1.860	2.015	2.170	2.325	2.480	2.635	2.790	2.945	10
20	3.100	3.255	3.410	3.565	3.720	3.875	4.030	4.185	4.340	4.495	20
30	4.650	4.805	4.960	5.115	5.270	5.425	5.580	5.735	5.890	6.045	30
40	6.200	6.355	6.510	6.665	6.820	6.975	7.130	7.285	7.440	7.595	40
50	7.750	7.905	8.060	8.215	8.370	8.525	8.680	8.835	8.990	9.145	50
60	9.300	9.455	9.610	9.765	9.920	10.075	10.230	10.385	10.540	10.695	60
70	10.850	11.005	11.160	11.315	11.470	11.625	11.780	11.935	12.090	12.245	70
80	12.400	12.555	12.710	12.865	13.020	13.175	13.330	13.485	13.640	13.795	80
90	13.950	14.105	14.260	14.415	14 570	14.725	14.880	15.035	15.190	15 345	90
100	15.500	15.655	15.810	15.965	16.120	16.275	16.430	16.583	16.740	16.895	100

VOLUME

CUBIC INCHES TO CUBIC CENTIMETERS

in³	0	1	2	3	4	5	6	7	8	9	in³
	cm³(cc)	cm³(cc)	cm³(cc)	cm³(cc)	cm³(cc)	cm³(cc)	cm³(cc)	cm³(cc)	cm³(cc)	cm³(cc)	
		16.387	32.774	49.161	65.548	81.935	98.322	114.709	131.097	147.484	—
10	163.871	180.258	196.645	213.032	229.419	245.806	262.193	278.580	294.967	311.354	10
20	327.741	344.128	360.515	376.902	393.290	209.677	426.064	442.451	458.838	475.225	20
30	491.612	507.999	524.386	540.773	557.160	573.547	589.934	606.321	622.708	639.095	30
40	655.483	671.870	688.257	704.644	721.031	737.418	753.805	770.192	786.579	802.966	40
50	819.353	835.740	852.127	868.514	884.901	901.289	917.676	934.063	950.450	966.837	50
60	983.224	999.611	1015.998	1032.385	1048.772	1065.159	1081.546	1097.933	1114.320	1130.707	60
70	1147.094	1163.482	1179.869	1196.256	1212.643	1229.030	1245.417	1261.804	1278.191	1294.578	70
80	1310.965	1327.352	1343.739	1360.126	1376.513	1392.900	1409.288	1425.675	1442.062	1458.449	80
90	1474.836	1491.223	1507.610	1523.997	1540.384	1556.771	1573.158	1589 545	1605.932	1622.319	90
100	1638.706	1655.093	1671 481	1687.868	1704.255	1720.642	1737.029	1753.416	1769.803	1786.190	100

CUBIC CENTIMETERS TO CUBIC INCHES

cm³(cc)	0	1	2	3	4	5	6	7	8	9	cm³(cc)
	in³	in³	in³	in³	in³	in³	in³	in³	in³	in³	
—		0.0610	0.1220	0.1831	0.2441	0.3051	0.3661	0.4272	0.4882	0.5492	—
10	0.6102	0.6713	0.7323	0.7933	0.8543	0.9153	0.9764	1.0374	1.0984	1.1594	10
20	1.2205	1.2815	1.3425	1.4035	1.4646	1.5256	1.5866	1.6476	1.7086	1 7697	20
30	1.8307	1.8917	1.9527	2.0138	2.0748	2.1358	2.1968	2.2579	2.1389	2.3799	30
40	2.4409	2.5020	2.5630	2.6240	2.6850	2.7460	2.8071	2.8681	2.9291	2.9901	40
50	3.0512	3.1122	3.1732	3.2342	3.2952	3.3563	3.4173	3.4783	3.5393	3.6004	50
60	3.6614	3.7224	3.7834	3.8444	3.9055	3.9665	4.0275	4.0885	4.1496	4.2106	60
70	4.2716	4.3326	4.3937	4.4547	4.5157	4.5767	4.6377	4.6988	4.7598	4.8208	70
80	4.8818	4.9429	5.0039	5.0649	5.1259	5.1870	5.2480	5.3090	5.3700	5.4310	80
90	5.4921	5.5531	5.6141	5.6751	5.7362	5.7972	5.8582	5.9192	5.9803	6.0413	90
100	6.1023	6.1633	6.2243	6.2854	6.3464	6 4074	6.4684	6.5295	6.5905	6.6515	100

VOLUME

GALLONS (U.S.) TO LITERS

U.S. gal.	0	1	2	3	4	5	6	7	8	9	U.S. gal.
	liters	liters	liters	liters	liters	liters	liters	liters	liters	liters	
—		3.7854	7.5709	11.3563	15.1417	18.9271	22.7126	26.4980	30.2834	34.0633	—
10	37.8543	41 6397	45.4251	49.2105	52.9960	56.7814	60.5668	64.3523	68.1377	71.9231	10
20	75 7085	79.4940	83.2794	87.0648	90.8502	94.6357	98.4211	102.2065	105.9920	109.7774	20
30	113.5629	117.3482	121.1337	124.9191	128.7045	132.4901	136.2754	140.0608	143.8462	147.6316	30
40	151 4171	155.2025	158.9879	162.7734	166.5588	170.3442	174.1296	177.9151	181.7005	185.4859	40
50	189.2713	193.0568	196.8422	200.6276	204.4131	208.1985	211.9839	215.7693	219.5548	223.3402	50
60	227 1256	230 9110	234.6965	238.4819	242.2673	246.0527	249.8382	253.6236	257.4090	261.1945	60
70	264.9799	268.7653	272.5507	276.3362	280.1216	283.9070	287.6924	291.4779	295.2633	299.0487	70
80	302 8342	306.6196	310.4050	314.1904	317.9759	321.7613	325.5467	329.3321	333.1176	336.9030	80
90	340.6884	344.4738	348.2593	352.0447	355.8301	359.6156	363.4010	367.1864	370.9718	374.7573	90
100	378.5427	382.3281	386.1135	389.8990	393.6844	397.4698	401.2553	405.0407	408.8261	412.6115	100

LITERS TO GALLONS (U.S.)

liters	0	1	2	3	4	5	6	7	8	9	liters
	gal	gal.	gal.	gal.	gal.	gal.	gal.	gal.	gal.	gal.	
—		0.2642	0.5283	0.7925	1.0567	1.3209	1.5850	1.8492	2.1134	2.3775	—
10	2.6417	2 9059	3.1701	3.4342	3.6984	3.9626	4.2268	4.4909	4.7551	5.0193	10
20	5.2834	5.5476	5.8118	6.0760	6.3401	6.6043	6.8685	7.1326	7.3968	7.6610	20
30	7.9252	8.1893	8.4535	8.7177	8.9818	9.2460	9.5102	9.7743	10.0385	10.3027	30
40	10.5669	10.8311	11.0952	11.3594	11.6236	11.8877	12.1519	12.4161	12.6803	12.9444	40
50	13.2086	13.4728	13.7369	14.0011	14.2653	14.5295	14.7936	15.0578	15.3220	15.5861	50
60	15.8503	16 1145	16.3787	16.6428	16.9070	17.1711	17.4354	17.6995	17.9637	18.2279	60
70	18 4920	18 7562	19.0204	19.2846	19.5487	19.8129	20.0771	20.3412	20.6054	20.8696	70
80	21.1338	21.3979	21.6621	21.9263	22.1904	22.4546	22.7188	22.9830	23.2471	23.5113	80
90	23.7755	24.0397	24.3038	24.5680	24.8322	25.0963	25.3605	25.6247	25.8889	26.1530	90
100	26.4172	26.6814	26.9455	27.2097	27.4739	27.7381	28.0022	28.2664	28.5306	28.7947	100

GALLONS (IMP.) TO LITERS

Imp gal.	0	1	2	3	4	5	6	7	8	9	Imp gal.
	liters	liters	liters	liters	liters	liters	liters	liters	liters	liters	
—		4 5459	9.0918	13.6377	18.1836	22.7295	27.2754	31.8213	36.3672	40.9131	—
10	45.4590	50.0049	54.5508	59.0967	63.6426	68.1885	72.7344	77.2803	81.8262	86.3721	10
20	90.9180	95.4639	100.0098	104.5557	109.1016	113.6475	118.1934	122.7393	127.2852	131.8311	20
30	136.3770	140.9229	145.4688	150.0147	154.5606	159.1065	163.6524	168.1983	172.7442	177.2901	30
40	181.8360	186.3819	190.9278	195.4737	200.0196	204.5655	209.1114	213.6573	218.2032	222.7491	40
50	227.2950	231.8409	236.3868	240.9327	245.4786	250.0245	254.5704	259.1163	263.6622	268.2081	50
60	272.7540	277.2999	281.8458	286.3917	290.9376	295.4835	300.0294	304.5753	309.1212	313.6671	60
70	318.2130	322.7589	327.3048	331.8507	336.8966	340.9425	345.4884	350.0343	354.5802	359.1261	70
80	363.6720	368.2179	372.7638	377.3097	381.8556	386.4015	390.9474	395.4933	400.0392	404.5851	80
90	409.1310	413.6769	418.2228	422.7687	427.3146	431.8605	436.4064	440.9523	445.4982	450.0441	90
100	454.5900	459.1359	463.6818	468.2277	472.7736	477.3195	481.8654	486.4113	490.9572	495.5031	100

LITERS TO GALLONS (IMP.)

liters	0	1	2	3	4	5	6	7	8	9	liter
	gal.	gal.	gal.	gal.	gal.	gal.	gal.	gal.	gal.	gal.	
—		0.2200	0.4400	0.6599	0.8799	1.0999	1.3199	1.5399	1.7598	1.9798	—
10	2.1998	2.4198	2.6398	2.8597	3.0797	3.2997	3.5197	3.7397	3.9596	4.1796	10
20	4.3996	4.6196	4.8396	5.0595	5.2795	5.4995	5.7195	5.9395	6.1594	6.3794	20
30	6.5994	6.8194	7.0394	7.2593	7.4793	7.6993	7.9193	8.1393	8.3592	8.5792	30
40	8.7992	9 0192	9.2392	9.4591	9.6791	9.8991	10.1191	10.3391	10.5590	10.7790	40
50	10.9990	11.2190	11.4390	11.6590	11.8789	12.0989	12.3189	12.5389	12.7588	12.9788	50
60	13.1988	13.4188	13.6388	13.8587	14.0787	14.2987	14.5187	14.7387	14.9586	15.1786	60
70	15.3986	15.6186	15.8386	16.0585	16.2785	16.4985	16.7185	16.9385	17.1584	17.3784	70
80	17.5984	17.8184	18.0384	18.2583	18.4783	18.6983	18.9183	19.1383	19.3582	19.5782	80
90	19.7982	20.0182	20.2382	20.4581	20.6781	20.8981	21.1181	21.3381	21.5580	21.7780	90
100	21.9980	22 2180	22.4380	22.6579	22.8779	23.0979	23.3179	23.5379	23.7578	23.9778	100

MASS

POUNDS TO KILOGRAMS

lbs.	0	1	2	3	4	5	6	7	8	9	lbs.
	kg	kg	kg	kg	kg	kg	kg	kg	kg	kg	
—		0.454	0.907	1.361	1.814	2.268	2.722	3.175	3.629	4.082	—
10	4.536	4.990	5.443	5.897	6.350	6.804	7.257	7.711	8.165	8.618	10
20	9.072	9.525	9.979	10.433	10.886	11.340	11.793	12.247	12.701	13.154	20
30	13.608	14.061	14.515	14.969	15.422	15.876	16.329	16.783	17.237	17.690	30
40	18.144	18.597	19.051	19.504	19.958	20.412	20.865	21.319	21.772	22.226	40
50	22.680	23.133	23.587	24.040	24.494	24.948	25.401	25.855	26.308	26.762	50
60	27.216	27.669	28.123	28.576	29.030	29.484	29.937	30.391	30.844	31.298	60
70	31.751	32.205	32.659	33.112	33.566	34.019	34.473	34.927	35.380	35.834	70
80	36.287	36.741	37.195	37.648	38.102	38.555	39.009	39.463	39.916	40.370	80
90	40.823	41.277	41.731	42.184	42.638	43.091	43.545	43.998	44.452	44.906	90
100	45.359	45.813	46.266	46.720	47.174	47.627	47.081	48.534	48.988	49.442	100

KILOGRAMS TO POUNDS

kg	0	1	2	3	4	5	6	7	8	9	kg
	lbs.	lbs.	lbs.	lbs.	lbs.	lbs.	lbs.	lbs.	lbs	lbs.	
—		2.205	4.409	6.614	8.818	11.023	13.228	15.432	17.637	19.842	—
10	22.046	24.251	26.455	28.660	30.865	33.069	35.274	37.479	39.683	41.888	10
20	44.092	46.297	48.502	50.706	52.911	55.116	57.320	59.525	61.729	63.934	20
30	66.139	68.343	70.548	72.753	74.957	77.162	79.366	81.571	83.776	85.980	30
40	88.185	90.390	92.594	94.799	97.003	99.208	101.413	103.617	105.822	108.026	40
50	110.231	112.436	114.640	116.845	119.050	121.254	123.459	125.633	127.868	130.073	50
60	132.277	134.482	136.687	138.891	141.096	143.300	145.505	147.710	149.914	152.119	60
70	154.324	156.528	158.732	160.937	163.142	165.347	167.551	169.756	171.961	174.165	70
80	176.370	178.574	180.780	182.984	185.188	187.393	189.597	191.802	194.007	196.211	80
90	198.416	200.621	202.825	205.030	207.234	209.439	211.644	213.848	216.053	218.258	90
100	220.462	222.667	224.871	227.076	229.281	231.485	233.690	235.895	238.099	240.304	100

KILOGRAMS TO NEWTON

kg	0	1	2	3	4	5	6	7	8	9	kg
	N	N	N	N	N	N	N	N	N	N	
—	—	9.81	19.61	29.42	39.23	49.03	58.84	68.65	78.45	88.26	—
10	98.07	107.87	117.68	127.49	137.29	147.10	156.91	166.71	176.52	186.33	10
20	196.13	205.94	215.75	225.55	235.36	245.17	254.97	264.78	274.59	284.39	20
30	294.20	304.01	313.81	323.62	333.43	343.23	353.04	362.85	372.65	382.46	30
40	392.27	402.07	411.88	421.69	431.49	441.30	451.11	460.91	470.72	480.53	40
50	490.33	500.14	509.95	519.75	529.56	539.37	549.17	558.98	568.79	578.59	50
60	558.40	598.21	608.01	617.82	627.63	637.43	647.24	657.05	666.85	676.66	60
70	686.47	696.27	706.08	715.89	725.69	735.50	745.31	755.11	764.92	774.73	70
80	784.53	794.34	804.15	813.95	823.76	833.57	843.37	853.18	862.99	872.79	80
90	882.60	892.41	902.21	912.02	921.83	931.63	941.44	951.25	961.05	970.86	90
100	980.67	990.47	1000.28	1010.08	1019.89	1029.70	1039.50	1049.31	1059.12	1068.92	100

NEWTON TO KILOGRAMS

N	0	10	20	30	40	50	60	70	80	90	N
	kg	kg	kg	kg	kg	kg	kg	kg	kg	kg	
—	—	1.020	2.039	3.059	4.079	5.099	6.118	7.138	8.158	9.177	—
100	10.197	11.217	12.237	13.256	14.276	15.296	16.316	17.335	18.355	19.375	100
200	20.394	21.414	22.434	23.453	24.473	25.493	26.513	27.532	28.552	29.572	200
300	30.592	31.611	32.631	33.651	34.670	35.690	36.710	37.730	38.749	39.769	300
400	40.789	41.809	42.828	43.848	44.868	45.887	46.907	47.927	48.947	49.966	400
500	50.986	52.006	53.025	54.045	55.065	56.085	57.104	58.124	59.144	60.163	500
600	61.183	62.203	63.223	64.242	65.262	66.282	67.302	68.321	69.341	70.361	600
700	71.380	72.400	73.420	74.440	75.459	76.479	77.499	78.518	79.538	80.558	700
800	81.578	82.597	83.617	84.637	85.656	86.676	87.696	88.716	89.735	90.755	800
900	91.775	92.795	93.814	94.834	95.854	96.873	97.893	98.913	99.933	100.952	900
1000	101.972	102.992	104.011	105.031	106.051	107.071	108.090	109.110	110.130	111.149	1000

PRESSURE

POUNDS PER SQUARE INCHES TO KILOGRAMS PER SQUARE CENTIMETERS

lb/in²	0	1	2	3	4	5	6	7	8	9	lb/in²
(psi)	kg/cm²	kg/cm²	kg/cm²	kg/cm²	kg/cm²	kg/cm²	kg/cm²	kg/cm²	kg/cm²	kg/cm²	(psi)
—		0.0703	0.1406	0.2109	0.2812	0.3515	0 4218	0.4921	0.5625	0.6328	—
10	0.7031	0.7734	0.8437	0.9140	0.9843	1.0546	1.1249	1.1952	1.2655	1.3358	10
20	1.4061	1.4764	1.5468	1.6171	1.6874	1.7577	1.8280	1.8983	1.9686	2.0389	20
30	2.1092	2.1795	2.2498	2.3201	2.3904	2.4607	2.5311	2.6014	2.6717	2.7420	30
40	2.8123	2.8826	2.9529	3.0232	3.0935	3.1638	3.2341	3.3044	3.3747	3.4450	40
50	3.5154	3.5857	3.6560	3.7263	3.7966	3.8669	3.9372	4.0075	4.0778	4.1481	50
60	4.2184	4.2887	4.3590	4.4293	4.4996	4 5700	4.6403	4.7106	4.7809	4.8512	60
70	4.9215	4.9918	5.0621	5.1324	5.2027	5.2730	5.3433	5.4136	5.4839	5.5543	70
80	5.6246	5.6947	5.7652	5.8355	5.9058	5.9761	6.0464	6 1167	6.1870	6.2573	80
90	6.3276	6.3979	6.4682	6.5386	6.6089	6.6792	6.7495	6.8198	6.8901	6.9604	90
100	7.0307	7.1010	7.1713	7.2416	7.3119	7.3822	7 4525	7.5228	7.5932	7 6635	100

KILOGRAMS PER SQUARE CENTIMETERS TO POUNDS PER SQUARE INCHES

kg/cm²	0	1	2	3	4	5	6	7	8	9	kg/cm²
	lb/in²(psi)	lb/in²(psi)	lb/in²(psi)	lb/in²(psi)	lb/in²(psi)	lb/in²(psi)	lb/in²(psi)	lb/in²(psi)	lb/in²(psi)	lb/in²(psi)	
—		14.22	28.45	42.67	56.89	71.12	85.34	99.56	113.78	128.01	—
10	142.23	156.45	170.68	184.90	199.12	213.35	227.57	241.79	256.01	270.24	10
20	284.46	298.68	312.91	327.13	341.35	355.58	369.80	384.02	398.24	412.47	20
30	426.69	440.91	455.14	469.36	483.58	497.81	512.03	526.25	540.47	554.70	30
40	568.92	583.14	597.37	611.59	625.81	640.04	654.26	668.48	682.70	696.93	40
50	711.16	725.37	739.60	753.82	768.04	782.27	795.49	810.71	824.93	839.16	50
60	853.38	867.60	881.83	896.05	910.27	924.50	938.72	952.94	967.16	981.39	60
70	995.61	1009.83	1024.06	1038.28	1052.50	1066.73	1080.95	1095.17	1109.39	1123.62	70
80	1137.84	1152.06	1166.27	1180.51	1194.73	1208.96	1223.18	1237.40	1251.62	1265.85	80
90	1280.07	1294.20	1308.52	1322.74	1336.96	1351.19	1365.41	1379.63	1393.85	1408.08	90
100	1422.30	1436.52	1450.75	1464.97	1479.19	1493.42	1507.64	1521 86	1536.08	1550.31	100

KILOGRAMS PER SQUARE CENTIMETERS TO KILO PASCAL

kg/cm²	0	1	2	3	4	5	6	7	8	9	kg/cm²
	KPa	KPa	KPa	KPa	KPa	KPa	KPa	KPa	KPa	KPa	
—	—	98.1	196.1	294.2	392.3	490.3	588.4	686.5	784.5	882.6	—
10	980.7	1078.7	1176.8	1274.9	1372.9	1471.0	1569.1	1667.1	1765.2	1863.3	10
20	1961.3	2059.4	2157.5	2255.5	2353.6	2451.7	2549.7	2647.8	2745.9	2843.9	20
30	2942.0	3040.1	3138.1	3236.2	3334.3	3432.3	3530.4	3628.5	3726.5	3824.6	30
40	3922.7	4020.7	4118.8	4216.9	4314.9	4413.0	4511.1	4609.1	4707.2	4805.3	40
50	4903.3	5001.4	5099.5	5197.5	5295.6	5393.7	5491.7	5589.8	5687.9	5785.9	50
60	5584.0	5982.1	6080.1	6178.2	6276.3	6374.3	6472.4	6570.5	6668.5	6766.6	60
70	6864.7	6962.7	7060.8	7158.9	7256.9	7355.0	7453.1	7551.1	7649.2	7747.3	70
80	7845.3	7943.4	8041.5	8139.5	8237.6	8335.7	8433.7	8531.8	8629.9	8727.9	80
90	8826.0	8924.1	9022.1	9120.2	9218.3	9316.3	9414.4	9512.5	9610.5	9708.6	90
100	9806.7	9904.7	10002.8	10100.8	10198.9	10297.0	10395.0	10493.1	10591.2	10689.2	100

KILO PASCAL TO KILOGRAMS PER SQUARE CENTIMETERS

KPa	0	100	200	300	400	500	600	700	800	900	KPa
	kg/cm²	kg/cm²	kg/cm²	kg/cm²	kg/cm²	kg/cm²	kg/cm²	kg/cm²	kg/cm²	kg/cm²	
—	—	1.020	2.039	3.059	4.079	5.099	6.118	7.138	8.158	9.177	—
1000	10.197	11.217	12.237	13.256	14.276	15.296	16.316	17.335	18.355	19.375	1000
2000	20.394	21.414	22.434	23.453	24.473	25.493	26.513	27.532	28.552	29.572	2000
3000	30.592	31.611	32.631	33.651	34.670	35.690	36.710	37.730	38.749	39.769	3000
4000	40.789	41.809	42.828	43.848	44.868	45.887	46.907	47.927	48.947	49.966	4000
5000	50.986	52.006	53.025	54.045	55.065	56.085	57.104	58.124	59.144	60.163	5000
6000	61.183	62.203	63.223	64.242	65.262	66.282	67.302	68.321	69.341	70.361	6000
7000	71.380	72.400	73.420	74.440	75.459	76.479	77.499	78.518	79.538	80.558	7000
8000	81.578	82.597	83.617	84.637	85.656	86.676	87.696	88.716	89.735	90.755	8000
9000	91.775	92.794	93.814	94.834	95 854	96.873	97.893	98.913	99.933	100.952	9000
10000	101.972	102.992	104.011	105.031	106.051	107.071	108.090	109.110	110.130	111 149	10000

TORQUE

FOOT POUNDS TO KILOGRAMMETERS

ft. lbs.	0	1	2	3	4	5	6	7	8	9	ft. lbs.
	kg-m	kg-m	kg-m	kg-m	kg-m	kg-m	kg-m	kg-m	kg-m	kg-m	
—		0.138	0.277	0 415	0.553	0.691	0.830	0.968	1.106	1.244	—
10	1.383	1.521	1.659	1.797	1.936	2.074	2.212	2.350	2 489	2.627	10
20	2.765	2.903	3.042	3 180	3.318	3.456	3.595	3.733	3.871	4.009	20
30	4.148	4.286	4.424	4.562	4.700	4.839	4.977	5.115	5.253	5.392	30
40	5.530	5.668	5.807	5.945	6.083	6.221	6.360	6.498	6.636	6.774	40
50	6.913	7.051	7.189	7.328	7.466	7.604	7.742	7.881	8.019	8.157	50
60	8.295	8.434	8.572	8.710	8.848	8.987	9.125	9.263	9.401	9.540	60
70	9.678	9.816	9.954	10.093	10.231	10 369	10 507	10.646	10.784	10 922	70
80	11.060	11.199	11.337	11.475	11.613	11.752	11.890	12.028	12.166	12.305	80
90	12.442	12.581	12.719	12.858	12.996	13.134	13.272	13.410	13.549	13.687	90
100	13.826	13.964	14.102	14.240	14.379	14.517	14.655	14.793	14.932	15.070	100

KILOGRAMMETERS TO FOOT POUNDS

kg-m	0	1	2	3	4	5	6	7	8	9	kg-m
	ft. lbs.	ft. lbs.	ft. lbs.	ft. lbs.	ft. lbs.	ft. lbs	ft. lbs.	ft. lbs.	ft. lbs.	ft. lbs.	
—		7.23	14.47	21.70	28.93	36 17	43.40	50.63	57.86	65.10	—
10	72.33	79.56	86.80	94.03	101.26	108.50	115.73	122.96	130.19	137.43	10
20	144.66	151.89	159.13	166.36	173.59	180.83	188.06	195.29	202.52	209.76	20
30	217.00	224.22	231.46	238.69	245.92	253.16	260.39	267.62	274.85	282.09	30
40	289.32	296.55	303.79	311.02	318.25	325.49	332.72	339.95	347.18	354.42	40
50	361.65	368.88	376.12	383.35	390.58	397.82	405.05	412.28	419.51	426.75	50
60	433.98	441.21	448.45	455.68	462.91	470.15	477.38	484.61	491.84	499.08	60
70	506.31	513.54	520.78	528.01	535.24	542.48	549.71	556.94	564.17	571.41	70
80	578.64	585.87	593.11	600.34	607.57	614.81	622.04	629.27	636.50	643.74	80
90	650.97	658.20	665.44	672.67	679.90	687.14	694.37	701.60	708.83	716.07	90
100	723.30	730.53	737.77	745.00	752.23	759.47	766.70	773.93	781.16	788.40	100

KILOGRAMMETERS TO NEWTONMETERS

kg-m	0	1	2	3	4	5	6	7	8	9	kg-m
	N-m	N-m	N-m	N-m	N-m	N-m	N-m	N-m	N-m	N-m	
—	—	9.81	19.61	29.42	39.23	49.03	58.84	68.65	78.45	88.26	—
10	98.07	107.87	117.68	127.49	137.29	147.10	156 91	166.71	176.52	186.33	10
20	196.13	205.94	215.75	225.55	235.36	245.17	254.97	264.78	274.59	284.39	20
30	294.20	304.01	313.81	323.62	333.43	343.23	353.04	362.85	372.65	382.46	30
40	392.27	402.07	411.88	421.69	431.49	441.30	451.11	460.91	470.72	480.53	40
50	490.33	500.14	509.95	519.75	529.56	539.37	549.17	558.98	568.79	578.59	50
60	588.40	598.21	608.01	617.82	627.63	637.43	647.24	657.05	666.85	676.66	60
70	686.47	696.27	706.08	715.89	725.69	735.50	745.31	755.11	764.92	774.73	70
80	784.53	794.34	804.15	813.95	823.76	833.57	843.37	853.18	862.99	872.79	80
90	882.60	892.41	902.21	912.02	921.83	931.63	941.44	951.25	961.05	970.86	90
100	980.67	990.47	1000.28	1010.08	1019.89	1029.70	1039.50	1049.31	1059.12	1068.92	100

NEWTONMETERS TO KILOGRAMMETERS

N-m	0	10	20	30	40	50	60	70	80	90	N-m
	kg-m	kg-m	kg-m	kg-m	kg-m	kg-m	kg-m	kg-m	kg-m	kg-m	
—	—	1.020	2.039	3.059	4.079	5.099	6 118	7.138	8.158	9.177	—
100	10.197	11.217	12.236	13.256	14.276	15.296	16.315	17.335	18.355	19.374	100
200	20.394	21.414	22.433	23.453	24.473	25.493	26.512	27.532	28.552	29.571	200
300	30.591	31.611	32.630	33.650	34.670	35.690	36.710	37.729	38.749	39.768	300
400	40.789	41.808	42.827	43.847	44.867	45.887	46.906	47.926	48.946	49.965	400
500	50.986	52.005	53.024	54.044	55.064	56.084	57.103	58.123	59.143	60.162	500
600	61.183	62.202	63.221	64.241	65.261	66.281	67.300	68.320	69.340	70.359	600
700	71.380	72.399	73.418	74.438	75.458	76.478	77.497	78.517	79.537	80.556	700
800	81.577	82.596	83.615	84.635	85.655	86.675	87.694	88.714	89.734	90.753	800
900	91.774	92.793	93.812	94.832	95.852	96.872	97.891	98.911	99.931	100.950	900
1000	101.972	102.990	104.009	105.029	106.049	107.069	108 088	109.108	110.128	111.147	1000

TEMPERATURE

FAHRENHEIT TO CENTIGRADE

°F	°C	°F	°C	°F	°C	°F	°C	°F	°C	°F	°C	°F	°C	°F	°C
-60	-51.1	-2	-18.9	56	13.3	114	45.6	172	77.8	230	110.0	288	142.2	346	174.4
-58	-50	0	-17.8	58	14.4	116	46.7	174	78.9	232	111.1	290	143.3	348	175.6
-56	-48.9	2	-16.7	60	15.6	118	47.8	176	80.0	234	112.2	292	144.4	350	176.7
-54	-47.8	4	-15.6	62	16.7	120	48.9	178	81.1	236	113.3	294	145.6	352	177.8
-52	-46.7	6	-14.4	64	17.8	122	50.0	180	82.2	238	114.4	296	146.7	354	178.9
-50	-45.6	8	-13.3	66	18.9	124	51.1	182	83.3	240	115.6	298	147.8	356	180.0
-48	-44.4	10	-12.2	68	20.0	126	52.2	184	84.4	242	116.7	300	148.9	358	181.1
-46	-43.3	12	-11.1	70	21.1	128	53.3	186	85.6	244	117.8	302	150.0	360	182.2
-44	-42.2	14	-10.0	72	22.2	130	54.4	188	86.7	246	118.9	304	151.1	362	183.3
-42	-41.1	16	-8.9	74	23.3	132	55.6	190	87.8	248	120.0	306	152.2	364	184.4
-40	-40.0	18	-7.8	76	24.9	134	56.7	192	88.9	250	121.1	308	153.3	366	185.6
-38	-38.9	20	-6.7	78	25.6	136	57.8	194	90.0	252	122.2	310	154.4	368	186.7
-36	-37.8	22	-5.6	80	26.7	138	58.9	196	91.1	254	123.3	312	155.6	370	187.8
-34	-36.7	24	-4.4	82	27.8	140	60.0	198	92.2	256	124.4	314	156.7	372	188.9
-32	-35.6	26	-3.3	84	28.9	142	61.1	200	93.3	258	125.6	316	157.8	374	190.0
-30	-34.4	28	-2.2	86	30.0	144	62.2	202	94.4	260	126.7	318	158.9	376	191.1
-28	-33.3	30	-1.1	88	31.1	146	63.3	204	95.6	262	127.8	320	160.0	378	192.2
-26	-32.2	32	-0	90	32.2	148	64.4	206	96.7	264	128.9	322	161.1	380	193.3
-24	-31.1	34	1.1	92	33.3	150	65.6	208	97.8	266	130.0	324	162.2	382	194.4
-22	-30.0	36	2.2	94	34.4	152	66.7	210	98.9	268	131.1	326	163.3	384	195.6
-20	-28.9	38	3.3	96	35.6	154	67.8	212	100.0	270	132.2	328	164.4	386	196.7
-18	-27.8	40	4.4	98	36.7	156	68.9	214	101.1	272	133.3	330	165.6	388	197.8
-16	-26.7	42	5.6	100	37.8	158	70.0	216	102.2	274	134.4	332	166.7	390	198.9
-14	-25.6	44	6.7	102	38.9	160	71.1	218	103.3	276	135.6	334	167.8	392	200.0
-12	-24.4	46	7.8	104	40.0	162	72.2	220	104.4	278	136.7	336	168.9	400	204.4
-10	-23.3	48	8.9	106	41.1	164	73.3	222	105.6	280	137.8	338	170.0	410	210.0
-8	-22.2	50	10.0	108	42.2	166	74.4	224	106.7	282	138.9	340	171.1	420	215.6
-6	-21.1	52	11.1	110	43.3	168	75.6	226	107.8	284	140.0	342	172.2	430	221.1
-4	-20.0	54	12.2	112	44.4	170	76.7	228	108.9	286	141.1	344	173.3	440	226.7

CENTIGRADE TO FAHRENHEIT

°C	°F	°C	°F	°C	°F	°C	°F	°C	°F	°C	°F	°C	°F	°C	°F
-50	-58.0	-18	- 0.4	14	57.2	46	114.8	78	172.4	110	230.0	142	287.6	174	345.2
-49	-56.2	-17	1.4	15	59.0	47	116.6	79	174.2	111	231.8	143	289.4	175	347.0
-48	-54.4	-16	3.2	16	60.8	48	118.4	80	176.0	112	233.6	144	291.2	176	348.8
-47	-52.6	-15	5.0	17	62.6	49	120.2	81	177.8	113	235.4	145	293.0	177	350.6
-46	-50.8	-14	6.8	18	64.4	50	122.0	82	179.6	114	237.2	146	294.8	178	352.4
-45	-49.0	-13	8.6	19	66.2	51	123.8	83	181.4	115	239.0	147	296.6	179	354.2
-44	-47.2	-12	10.4	20	68.0	52	125.6	84	183.2	116	240.8	148	298.4	180	356.0
-43	-45.4	-11	12.2	21	69.8	53	127.4	85	185.0	117	242.6	149	300.2	181	357.8
-42	-43.6	-10	14.0	22	71.6	54	129.2	86	186.8	118	244.4	150	302.0	182	359.6
-41	-41.8	-9	15.8	23	73.4	55	131.0	87	188.6	119	246.2	151	303.8	183	361.4
-40	-40.0	-8	17.6	24	75.2	56	132.8	88	190.4	120	248.0	152	305.6	184	363.2
-39	-38.2	-7	19.4	25	77.0	57	134.6	89	192.2	121	249.8	153	307.4	185	365.0
-38	-36.4	-6	21.2	26	78.8	58	136.4	90	194.0	122	251.6	154	309.2	186	366.8
-37	-34.6	-5	23.0	27	80.6	59	138.2	91	195.8	123	253.4	155	311.0	187	368.6
-36	-32.8	-4	24.8	28	82.4	60	140.0	92	197.6	124	255.2	156	312.8	188	370.4
-35	-31.0	-3	26.6	29	84.2	61	141.8	93	199.4	125	257.0	157	314.6	189	372.2
-34	-29.2	-2	28.4	30	86.0	62	143.6	94	201.2	126	258.8	158	316.4	190	374.0
-33	-27.4	-1	30.2	31	87.8	63	145.4	95	203.0	127	260.6	159	318.2	191	375.8
-32	-25.6	0	32.0	32	89.6	64	147.2	96	204.8	128	262.4	160	320.0	192	377.6
-31	-23.8	1	33.8	33	91.4	65	149.0	97	206.6	129	264.2	161	321.8	193	379.4
-30	-22.0	2	35.6	34	93.2	66	150.8	98	208.4	130	266.0	162	323.6	194	381.2
-29	-20.2	3	37.4	35	95.0	67	152.6	99	210.2	131	267.8	163	325.4	195	383.0
-28	-18.4	4	39.2	36	96.8	68	154.4	100	212.0	132	269.6	164	327.2	196	384.8
-27	-16.6	5	41.0	37	98.6	69	156.2	101	213.8	133	271.4	165	329.0	197	386.6
-26	-14.8	6	42.8	38	100.4	70	158.0	102	215.6	134	273.2	166	330.8	198	388.4
-25	-13.0	7	44.6	39	102.2	71	159.8	103	217.4	135	275.0	167	332.6	199	390.2
-24	-11.2	8	46.4	40	104.0	72	161.6	104	219.2	136	276.8	168	334.4	200	392.0
-23	-9.4	9	48.2	41	105.8	73	163.4	105	221.0	137	278.6	169	336.4	210	410.0
-22	-7.6	10	50.0	42	107.6	74	165.2	106	222.8	138	280.4	170	338.0	220	428.0
-21	-5.8	11	51.8	43	109.4	75	167.0	107	224.6	139	282.2	171	339.8	230	446.0
-20	-4.4	12	53.6	44	111.2	76	168.8	108	226.4	140	284.0	172	341.6	240	464.0

ISUZU

KB - SERIES

WORKSHOP MANUAL

SECTION 0B

MAINTENANCE AND LUBRICATION

SECTION 0B

MAINTENANCE AND LUBRICATION

TABLE OF CONTENTS

PAGE

Maintenance Schedule ..... 0B— 2
Severe Conditions Maintenance Schedule ..... 0B— 6
Recommended Lubricants and Diesel Fuels ..... 0B— 7
Oil Viscosity Chart ..... 0B— 9

MAINTENANCE SCHEDULE

MAINTENANCE SCHEDULE ABBREVIATIONS

- **V** Variation (Optional equipment on some model).
- **G** For gasoline engine models only.
- **D** For diesel engine models only.
- **MT** For manual transmission.
- **AT** For Automatic transmission.
- **4JA** For 4JA1 engine model
- **4JT** For turbocharged 4JB1 engine model

Items followed by an asterisk (*) require more frequent maintenance if the vehicle is driven under severe conditions.
Refer to "SEVERE CONDITIONS MAINTENANCE SCHEDULE."

MAINTENANCE SCHEDULE (THIS SCHEDULE IS NOT APPLIED FOR EUROPE)

I : Inspect and correct or replace as necessary A: Adjust
R: Replace or change T: Tighten to specified torque L: Lubricate

SERVICE INTERVAL:	× 1,000 km.	1	5	10	15	20	25	30	35	40	45	50	55	60	65	70	75	80	85	90	95	100
(Use odometer reading or months whichever comes first)	× 1,000 miles.	0.6	3	6	9	12	15	18	21	24	27	30	33	36	39	42	45	48	51	54	57	60
	or months	—	3	6	9	12	15	18	21	24	27	30	33	36	39	42	45	48	51	54	57	60
ENGINE																						
Idling speed and acceleration		-	I	I	I	I	I	I	I	I	I	I	I	I	I	I	I	I	I	I	I	I
*Air cleaner element		-	-	I	-	I	-	I	-	R	-	I	-	I	-	I	R	I	-	I	-	I
[V] Dry air cleaner element		-	I	I	I	I	I	I	I	R	I	I	I	I	I	I	I	R	I	I	I	I
[V] [G] Pre air clearner		-	-	I	-	I	-	I	-	I	-	I	-	I	-	I	-	I	-	I	-	I
*Engine oil		-	R	R	R	R	R	R	R	R	R	R	R	R	R	R	R	R	R	R	R	R
Oil leakage and contamination		-	I	I	I	I	I	I	I	I	I	I	I	I	I	I	I	I	I	I	I	I
* [G] [4JT] Oil filter		-	R	R	-	R	-	R	-	R	-	R	-	R	-	R	-	R	-	R	-	R
* [4JA] Oil filter		-	R	-	R	-	-	R	-	-	R	-	-	R	-	-	R	-	-	R	-	-
Fuel leakage		-	I	I	I	I	I	I	I	I	I	I	I	I	I	I	I	I	I	I	I	I
[G] Cylinder head bolts																						
Valve clearances		-	A	-	-	A	-	-	-	A	-	-	-	A	-	-	-	A	-	-	-	A
[G] Fuel filter		-	-	-	-	R	-	-	-	R	-	-	-	R	-	-	-	R	-	-	-	R
[D] Fuel filter		-	-	-	R	-	-	R	-	-	R	-	-	R	-	-	R	-	-	R	-	-
[G] Fuel pump function		-	-	-	-	I	-	-	-	I	-	-	-	I	-	-	-	I	-	-	-	I
Fuel tank		-	-	-	-	I	-	-	-	I	-	-	-	I	-	-	-	I	-	-	-	I
[D] Injection nozzle pressure and spraying condition		-	-	I	-	I	-	I	-	I	-	I	-	I	-	I	-	I	-	I	-	I
[D] Injection timing		-	-	I	-	I	-	I	-	I	-	I	-	I	-	I	-	I	-	I	-	I
Compression pressure		-	-	-	-	I	-	-	-	I	-	-	-	I	-	-	-	I	-	-	-	I
[G] Carburetor function		-	I	I	I	I	I	I	I	I	I	I	I	I	I	I	I	I	I	I	I	I
[G] Distributor cam and shaft		-	-	-	-	L	-	-	-	L	-	-	-	L	-	-	-	L	-	-	-	L
[G] Distributor cap and rotor		-	I	I	I	I	I	I	I	I	I	I	I	I	I	I	I	I	I	I	I	I
[G] Distributor vacuum advance function		-	-	I	-	I	-	I	-	I	-	I	-	I	-	I	-	I	-	I	-	I
[G] Spark plugs		-	I	I	I	I	I	I	I	I	I	I	I	I	I	I	I	I	I	I	I	I
[G] Ignition timing		-	I	I	I	I	I	I	I	I	I	I	I	I	I	I	I	I	I	I	I	I
Cooling system for water leakage		-	I	I	I	I	I	I	I	I	I	I	I	I	I	I	I	I	I	I	I	I
Fan belt tension and damage		-	I	I	I	I	I	I	I	I	I	I	I	I	I	I	I	I	I	I	I	I
*Exhaust pipes and mountings damage or looseness		-	-	-	-	I	-	-	-	I	-	-	-	I	-	-	-	I	-	-	-	I
Radiator coolant		-	-	-	-	R	-	-	-	R	-	-	-	R	-	-	-	R	-	-	-	R
All hoses and pipes in engine compartment for clogs or damage		-	-	I	-	I	-	I	-	I	-	I	-	I	-	I	-	I	-	I	-	I
Timing belt		-	-	-	-	-	-	-	-	-	-	-	-	-	-	-	-	-	-	-	-	R
CLUTCH																						
Clutch fluid		-	-	-	-	I	-	-	-	I	-	-	-	I	-	-	-	I	-	-	-	I
Clutch function		-	I	I	I	I	I	I	I	I	I	I	I	I	I	I	I	I	I	I	I	I
Clutch pedal travel and free play		-	I	I	I	I	I	I	I	I	I	I	I	I	I	I	I	I	I	I	I	I

I : Inspect and correct or replace as necessary A: Adjust
R: Replace or change T: Tighten to specified torque L: Lubricate

SERVICE INTERVAL:	× 1,000 km.	1	5	10	15	20	25	30	35	40	45	50	55	60	65	70	75	80	85	90	95	100
(Use odometer reading or months whichever comes first)	× 1,000 miles.	0.6	3	6	9	12	15	18	21	24	27	30	33	36	39	42	45	48	51	54	57	60
	or months	—	3	6	9	12	15	18	21	24	27	30	33	36	39	42	45	48	51	54	57	60
TRANSMISSION OR TRANSMISSION WITH TRANSFER CASE																						
*Transmission or transmission with transfer case oil		-	-	R	-	-	-	-	-	R	-	-	-	-	-	-	-	R	-	-	-	-
Automatic transmission fluid		-	-	-	-	-	-	-	-	I	-	-	-	-	-	-	-	I	-	-	-	R
Oil leakage		I	I	I	I	I	I	I	I	I	I	I	I	I	I	I	I	I	I	I	I	I
Gear control mechanism for looseness		-	-	-	-	I	-	-	-	I	-	-	-	I	-	-	-	I	-	-	-	I
PROPELLER SHAFT																						
Loose connections		-	-	I	-	I	-	I	-	I	-	I	-	I	-	I	-	I	-	I	-	I
*Universal joints and splines for wear		-	-	-	-	I	-	-	-	I	-	-	-	I	-	-	-	I	-	-	-	I
Universal joints and splines		-	L	L	L	L	L	L	L	L	L	L	L	L	L	L	L	L	L	L	L	L
FRONT AND REAR AXLE																						
*Differential gear oil (Front and rear)		-	-	R	-	-	-	-	-	R	-	-	-	-	-	-	-	R	-	-	-	-
Oil leakage		I	I	I	I	I	I	I	I	I	I	I	I	I	I	I	I	I	I	I	I	I
Axle shafts for distortion or damage		-	-	-	-	I	-	-	-	I	-	-	-	I	-	-	-	I	-	-	-	I
Axle case for distortion or damage		-	-	-	-	I	-	-	-	I	-	-	-	I	-	-	-	I	-	-	-	I
STEERING																						
Steering gear oil		-	-	-	-	-	-	-	-	-	-	-	-	I	-	-	-	-	-	-	-	-
Power steering fluid		-	-	-	-	-	-	-	-	-	-	R	-	-	-	-	-	-	-	-	-	R
Oil leakage		-	I	I	I	I	I	I	I	I	I	I	I	I	I	I	I	I	I	I	I	I
*Steering system for looseness or damage		-	-	I	-	I	-	I	-	I	-	I	-	I	-	I	-	I	-	I	-	I
Power steering hose		-	-	-	-	-	-	-	-	-	-	-	-	-	-	R	-	-	-	-	-	-
Steering wheel play		-	I	I	I	I	I	I	I	I	I	I	I	I	I	I	I	I	I	I	I	I
Steering function		-	I	I	I	I	I	I	I	I	I	I	I	I	I	I	I	I	I	I	I	I
Right and left turning radius		-	-	-	-	I	-	-	-	I	-	-	-	I	-	-	-	I	-	-	-	I
Wheel alignment		-	-	-	-	I	-	-	-	I	-	-	-	I	-	-	-	I	-	-	-	I
Joint ball		-	-	I	-	I	-	I	-	I	-	I	-	I	-	I	-	I	-	I	-	I
SERVICE BRAKES																						
Brake fluid		-	-	-	-	I	-	-	-	I	-	-	-	I	-	-	-	I	-	-	-	I
Brake system for fluid leakage		-	I	I	I	I	I	I	I	I	I	I	I	I	I	I	I	I	I	I	I	I
Brake function		-	I	I	I	I	I	I	I	I	I	I	I	I	I	I	I	I	I	I	I	I
*Rear brake lining and durm wear		-	-	I	-	I	-	I	-	I	-	I	-	I	-	I	-	I	-	I	-	I
*Front disc brake pads and discs		-	-	I	-	I	-	I	-	I	-	I	-	I	-	I	-	I	-	I	-	I
Brake pedal travel and free play		I	I	I	I	I	I	I	I	I	I	I	I	I	I	I	I	I	I	I	I	I
Pipes and hoses for loose connections or damage		-	I	I	I	I	I	I	I	I	I	I	I	I	I	I	I	I	I	I	I	I

I : Inspect and correct or replace as necessary A: Adjust
R: Replace or change T: Tighten to specified torque L: Lubricate

SERVICE INTERVAL:	× 1,000 km.	1	5	10	15	20	25	30	35	40	45	50	55	60	65	70	75	80	85	90	95	100
(Use odometer reading	× 1,000 miles.	0.6	3	6	9	12	15	18	21	24	27	30	33	36	39	42	45	48	51	54	57	60
or months whichever comes first)	or months	—	3	6	9	12	15	18	21	24	27	30	33	36	39	42	45	48	51	54	57	60
PARKING BRAKE																						
Parking brake function		-	I	I	I	I	I	I	I	I	I	I	I	I	I	I	I	I	I	I	I	I
Parking brake lever travel		-	I	I	I	I	I	I	I	I	I	I	I	I	I	I	I	I	I	I	I	I
Cables for looseness or damage and guide for damage		-	I	I	I	I	I	I	I	I	I	I	I	I	I	I	I	I	I	I	I	I
Ratchet for wear or damage		-	-	-	-	I	-	-	-	I	-	-	-	I	-	-	-	I	-	-	-	I
SUSPENSION																						
Spring leaves for damage		-	I	I	I	I	I	I	I	I	I	I	I	I	I	I	I	I	I	I	I	I
Mount for looseness or damage		-	I	I	I	I	I	I	I	I	I	I	I	I	I	I	I	I	I	I	I	I
Shock absorbers for oil leakage		-	-	I	-	I	-	I	-	I	-	I	-	I	-	I	-	I	-	I	-	I
Shock absorbers mount for looseness		-	I	-	I	-	I	-	I	-	I	-	I	-	I	-	I	-	I	-	I	-
Rubber bushes of suspension wear or damage		-	-	I	-	I	-	I	-	I	-	I	-	I	-	I	-	I	-	I	-	I
Spring action for loss of balance due to weakening		-	-	-	-	I	-	-	-	I	-	-	-	I	-	-	-	I	-	-	-	I
WHEELS																						
Wheel pins		T	T	T	T	T	T	T	T	T	T	T	T	T	T	T	T	T	T	T	T	T
Wheel disc for damage		-	I	I	I	I	I	I	I	I	I	I	I	I	I	I	I	I	I	I	I	I
Hub bearing grease		-	-	-	-	R	-	-	-	R	-	-	-	R	-	-	-	R	-	-	-	R
Front and rear hub bearings for looseness		-	-	I	-	I	-	I	-	I	-	I	-	I	-	I	-	I	-	I	-	I
Tire pressure and damage		-	I	I	I	I	I	I	I	I	I	I	I	I	I	I	I	I	I	I	I	I
Tire rotation		-	-	R	-	R	-	R	-	R	-	R	-	R	-	R	-	R	-	R	-	R
ELECTRICAL EQUIPMENT																						
Starter function		-	-	-	-	I	-	-	-	I	-	-	-	I	-	-	-	I	-	-	-	I
Specific gravity of battery electrolyte		-	-	I	-	I	-	I	-	I	-	I	-	I	-	I	-	I	-	I	-	I
Wiring harness and terminal for looseness or damage		-	I	I	I	I	I	I	I	I	I	I	I	I	I	I	I	I	I	I	I	I
Starter brushes for wear		-	-	-	-	I	-	-	-	I	-	-	-	I	-	-	-	I	-	-	-	I
Alternator brushes for wear		-	-	-	-	I	-	-	-	I	-	-	-	I	-	-	-	I	-	-	-	I
OTHERS																						
Vehicle height		-	-	-	-	I	-	-	-	I	-	-	-	I	-	-	-	I	-	-	-	I
Bolts and nuts on chassis and body		-	-	I	-	I	-	I	-	I	-	I	-	I	-	I	-	I	-	I	-	I

SEVERE CONDITIONS MAINTENANCE SCHEDULE

(THIS SCHEDULE IS NOT APPLIED FOR EUROPE)

Severe driving conditions
- A: Repeated short trips
- B: Driving on rough roads
- C: Driving on dusty roads
- D: Driving in extremely cold weather and/or on salted roads

Item	Interval	Condition				
		A	B	C	D	A+D
Engine oil	Change every 2,500 km (1,500 miles)			●		●
Engine oil filter	G 4JT Replace every 5,000 km (3,000 miles) 4JA Replace every 7,500 km (4,500 miles)			●		●
Exhaust pipes and mounting	Inspect every 10,000 km (6,000 miles)	●	●		●	
Air cleaner element	Replace every 20,000 km (12,000 miles)			●		
Steering system for looseness or damage	Inspect every 5,000 km (3,000 miles)		●			
Universal joints and sleeve for wear	Inspect every 10,000 km (6,000 miles)		●			
Transmission or transmission with tranfer case	Change every 20,000 km (12,000 miles) after changing at the initial 10,000 km (60,000 miles)		●			
Differential oil	Change every 20,000 km (12,000 miles) after changing at the initial 10,000 km (6,000 miles)		●			
Rear brake lining and drum	Inspect every 5,000 km (3,000 miles)	●	●	●		
Front brake pads and disc	Inspect every 5,000 km (3,000 miles)	●	●	●		

RECOMMENDED FLUIDS, LUBRICANTS AND FUELS

In order to obtain maximum performance and longest service life from your ISUZU vehicles, it is very important to select and use correctly best lubricants and diesel fuels.

When lubricating, be sure to use ISUZU genuine lubricants or recommended lubricants listed below, according to the maintenance schedule for each vehicle model.

The lubrication intervals in the maintenance schedule and the coverage and period of new vehicle warranty are based on the use of ISUZU genuine lubricants or recommended lubricants as given in the chart which will serve as a guide for selecting lubricants of proper brand name.

LUBRICATION	MAKE	BRAND / TYPE	GRADE
Diesel engine crankcase	**ISUZU GENUINE**	**BESCO MULTI – Z TYPE CE (10W-30)**	**CE**
	ISUZU GENUINE	**BESCO MULTI – Z (10W-30)**	**CD**
	ISUZU GENUINE	**BESCO S – 3 (10W, 20W, 30, 40)**	**CD**
	EXXON / ESSO	ESSOLUBE XD-3+ (15W-40)	CF-4 / CF
	MOBIL	MOBIL DELVAC XHP (10W-30, 15W-40)	CF / CE
	CALTEX / CHEVRON	DELO CXJ (15W-40, 30, 40)	CF
	SHELL	SHELL RIMULA D OIL (30)	CD
Gasoline engine crankcase	**ISUZU GENUINE**	**BESCO RACING ACE (7.5W-30)**	**SG**
	ISUZU GENUINE	**BESCO MULTI ACE (7.5W-30)**	**SF**
	ISUZU GENUINE	**BESCO ACE (10W-30)**	**SE**
	EXXON / ESSO	ESSO SUPER FLO XT (15W-40, 20W-50)	SH
	EXXON / ESSO	ESSO MAXXOIL (15W-40, 20W-50)	SH
	MOBIL	MOBIL SUPER XHP (15W-40, 15W-50, 20W-50)	SH
	CALTEX / TEXACO	HAVOLINE FORMULA-3 (15W-40, 20W-50)	SH
	SHELL	SHELL HELIX ULTRA (5W-40)	SH
Manual transmission Transfer case	**ISUZU GENUINE**	**BESCO GEAR OIL TRANSAXLE (5W-30)**	
	EXXON / ESSO	ESSOLUBE XD-3+ (15W-40)	CF-4 / CF
	MOBIL	MOBIL SUPER (10W-30)	SH
	CALTEX / TEXACO	HAVOLINE FORMULA-3 (15W-40, 20W-50)	SH
	SHELL	SHELL MYRINA (15W-40)	CD
Differential Shift on the fly system (GL-5 only)	**ISUZU GENUINE**	**BESCO GEAR OIL SH (80W-90, 90, 140)**	**GL-5**
	EXXON / ESSO	ESSO GEAR OIL GX (85W-90)	GL-5
	MOBIL	MOBILUBE HD (80W-90, 85W-140)	GL-5
	CALTEX	THUBAN GL-5 EP (80W-90, 85W-140)	GL-5
	SHELL	SHELL SPIRAX HD (90, 140)	GL-5
Differential (Limited Slip Differential)	**ISUZU GENUINE**	**BESCO GEAR OIL LSD (140)**	**GL-5**
	EXXON / ESSO	ESSO GEAR OIL LSA (90)	GL-5
	MOBIL	MOBILUBE HD LS (80W-90)	GL-5
	CALTEX	GEAR OIL LSD (90)	GL-5
Automatic transmission Power steering	**ISUZU GENUINE**	**BESCO ATF**	
	EXXON / ESSO	ESSO ATF D (DEXRON® II-D)	
	MOBIL	MOBIL ATF (DEXRON® II-E)	
	CALTEX	ATF HD (DEXRON® II)	
	SHELL	SHELL DONAX TA (DEXRON® II-D)	
Propeller shaft sliding yoke, Universal joint Clutch shift block Grease fitting	**ISUZU GENUINE**	**BESCO L-2 GREASE (No.2), L-3 GREASE (No.3)**	
	EXXON / ESSO	BEACON 2 (No.2), 3 (No.3)	
	MOBIL	MOBIL GREASE HP (No.2, No.3)	
	CALTEX / TEXACO	STARPLEX-2 (No.2)	
	SHELL	SHELL RETINAX A (No.2)	

FLUID	TYPE
Clutch and brake fluid reservior	Hydraulic brake fluid SAE J1703 FMVSS 116 DOT.3 grade
Engine cooling system	Good quality ethylene glycol antifreeze

NOTE:

When the recommended lubricants are specified in the workshop manual, follow them.

DIESEL FUEL/APPLICABLE STANDARD	RECOMMENDATION
JIS (JAPANESE INDUSTRIAL STANDARD)	No. 2
DIN (DEUTSCHE INDUSTRIE NORMEN)	DIN 51601
SAE (SOCIETY OF AUTOMOTIVE ENGINEERS)	
Based on SAE J-313C	No. 2-D
BS (BRITISH STANDARD)	
Based on BS/2869-1970	Class A-1

OIL VISCOSITY CHART

Lubricants should be carefully selected according to the lubrication chart. It is also important to select viscosity of lubricants according to the ambient temperature by referring to the following table.

OIL VISCOSITY CHART FOR DIESEL ENGINE

APPLY DIESEL ENGINE OIL

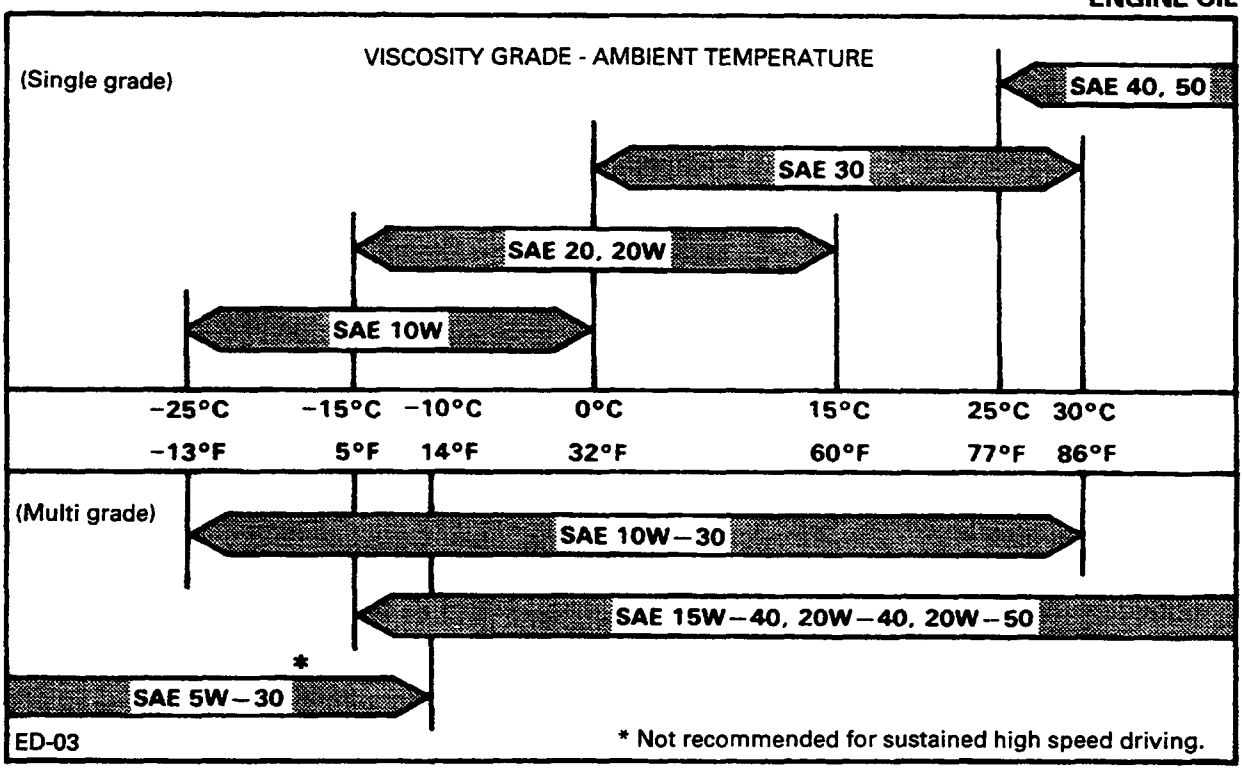

OIL VISCOSITY CHART FOR GASOLINE ENGINE

APPLY GASOLINE ENGINE OIL

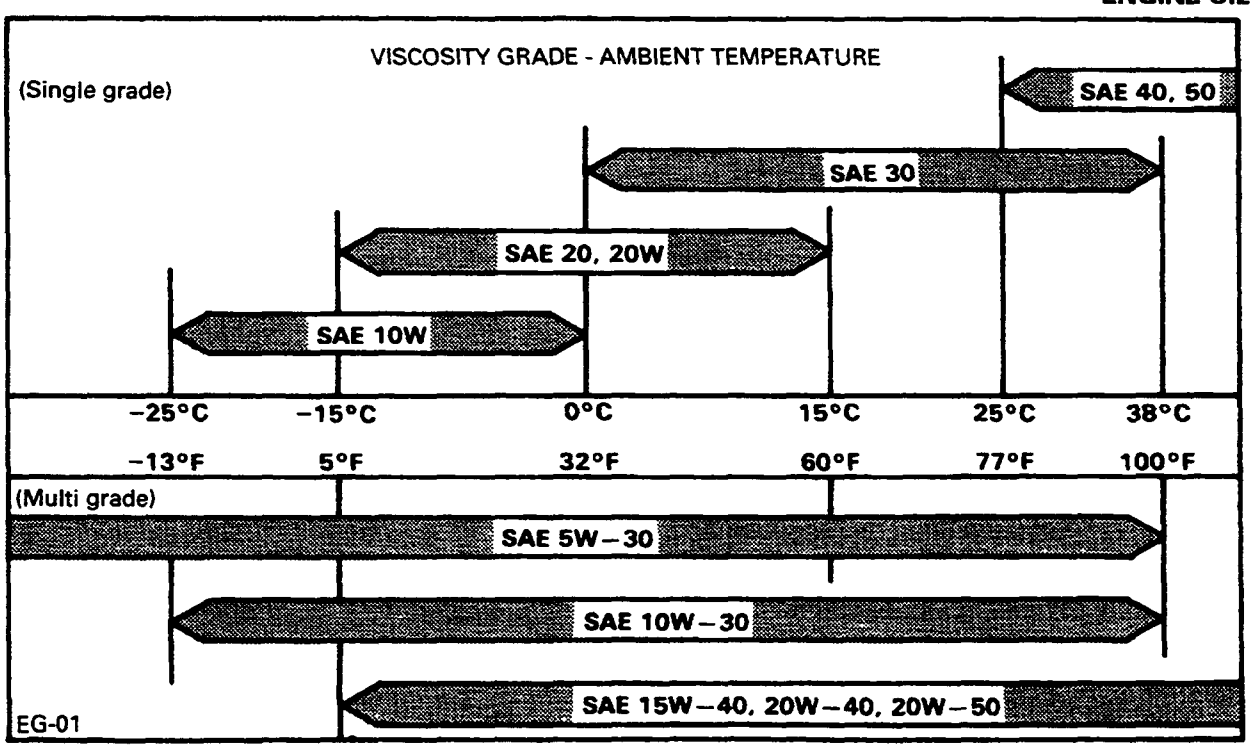

OIL VISCOSITY CHART FOR TRANSMISSION CASE

APPLY ENGINE OIL

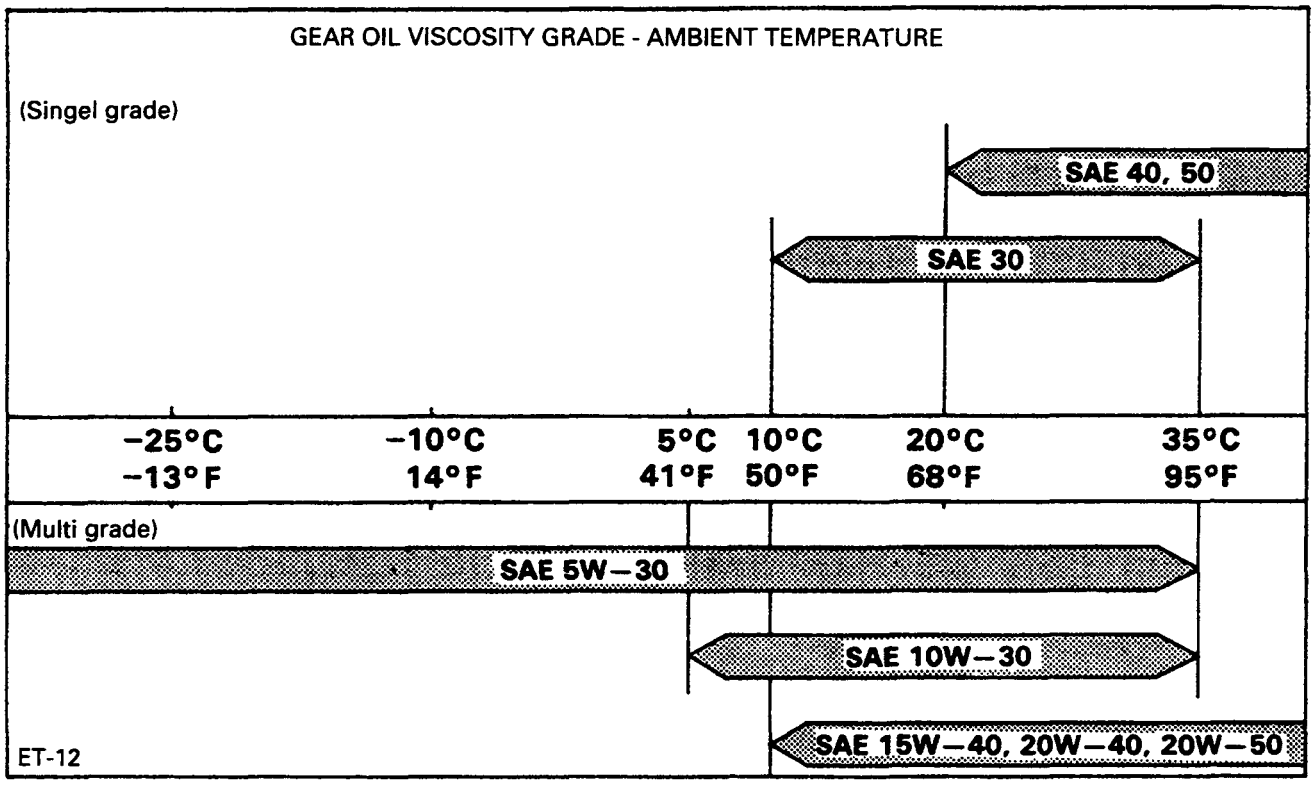

OIL VISCOSITY CHART FOR FRONT AXLE AND REAR AXLE

APPLY GEAR OIL

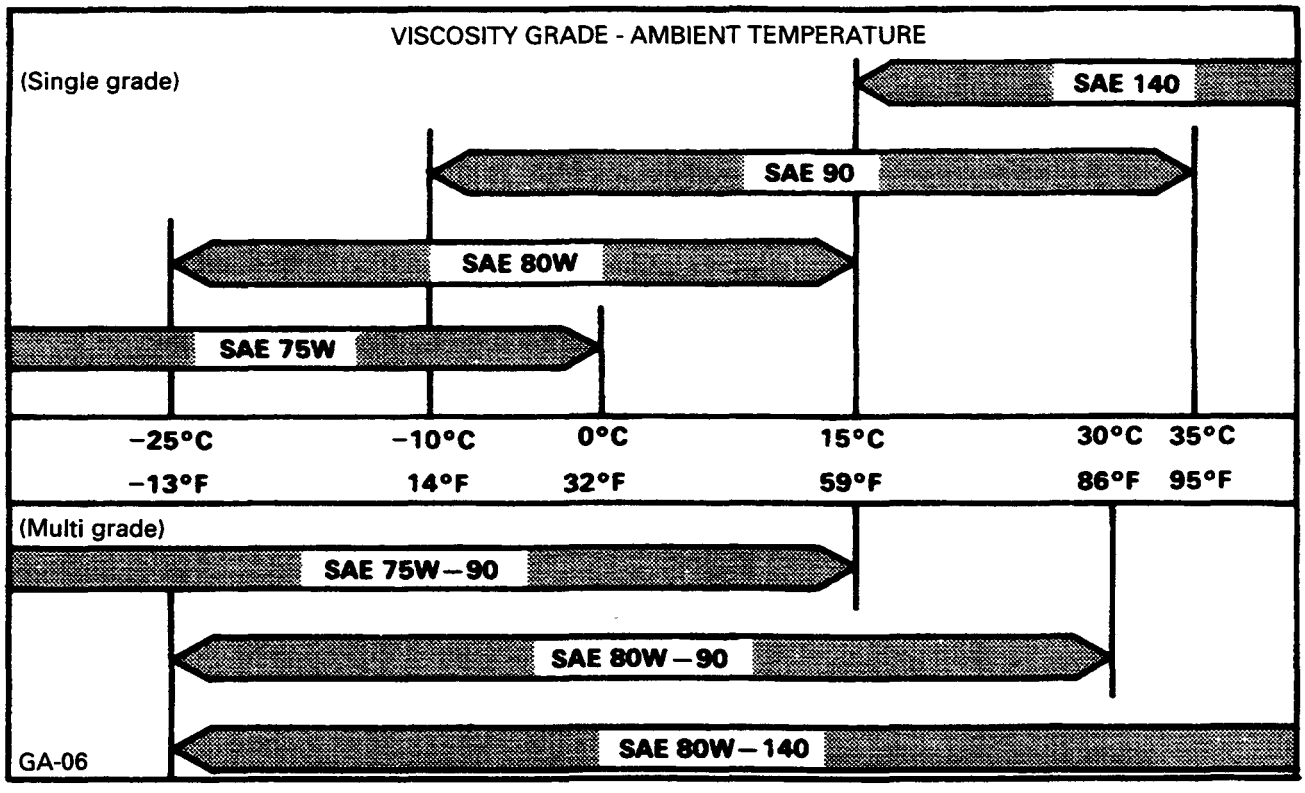

Index
Description
Servicing
Compressor
Condenser
Receiver
Evaporator
Blower
Heater

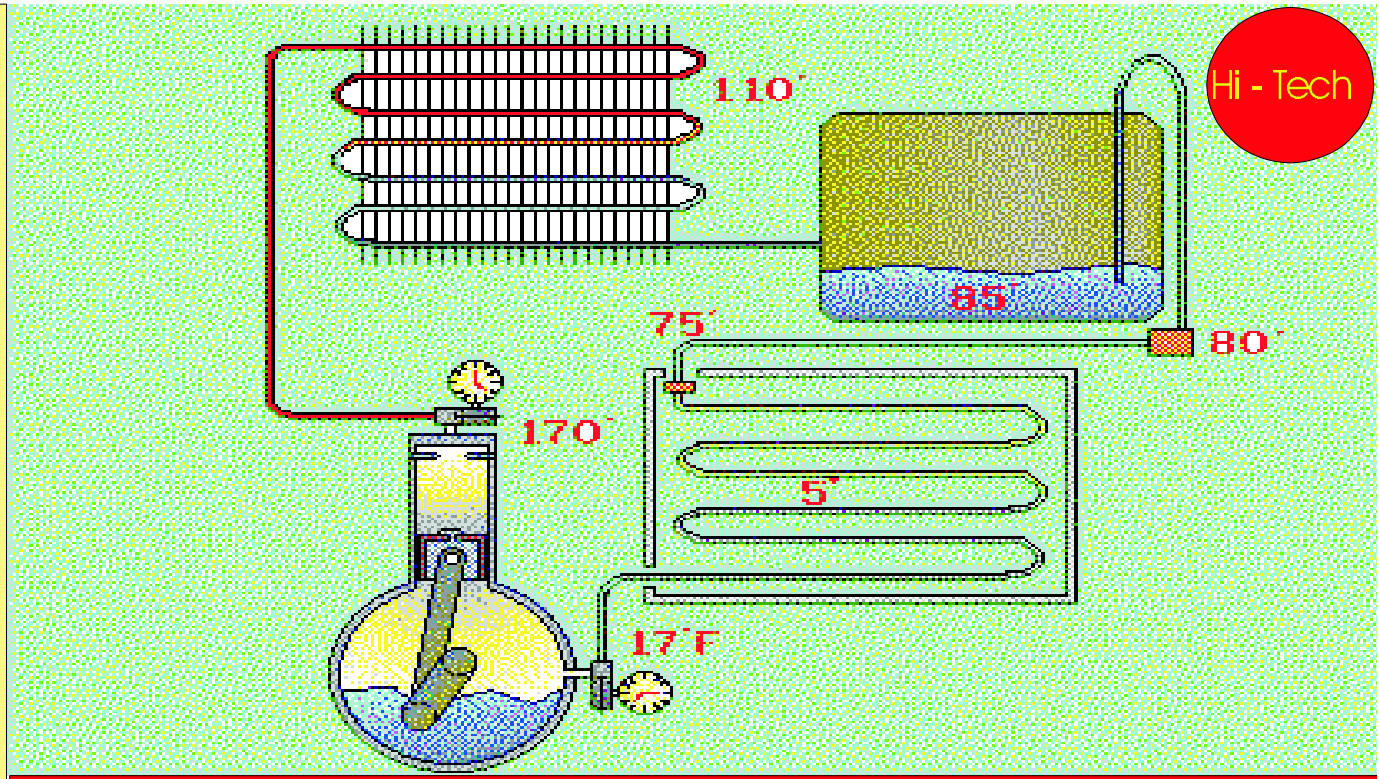

KB TF 140
Heating & Aircon

ISUZU

SECTION 1
HEATING AND AIR CONDITIONING

TABLE OF CONTENTS

PAGE

General Information 1– 2
Main Data and Specifications 1– 7
Special Parts Fixing Nuts and Bolts 1– 8
Servicing 1– 10
    Precautions for Refrigerant - 134a (R-134a) Air Conditioning System 1– 10
Condenser 1– 28
    Removal and Installation 1– 28
Receiver Dehydrator 1– 29
    Removal and Installation 1– 29
Compressor 1– 30
    Removal and Installation 1– 30
    Service Procedure 1– 39
    Inspection Procedures 1– 40
    Repair Procedures 1– 44
    General Information 1– 52
Heater Unit, Blower Unit and Evaporator Assembly 1– 53
    Removal and Installation 1– 53
    Disassembly and Reassembly 1– 58
Control Lever Assembly 1– 62
    Removal and Installation 1– 62
    Inspection and Repair 1– 65
Troubleshooting 1– 66

GENERAL DESCRIPTION

SYSTEM COMPONENTS

These illustraions are based on the LHD model

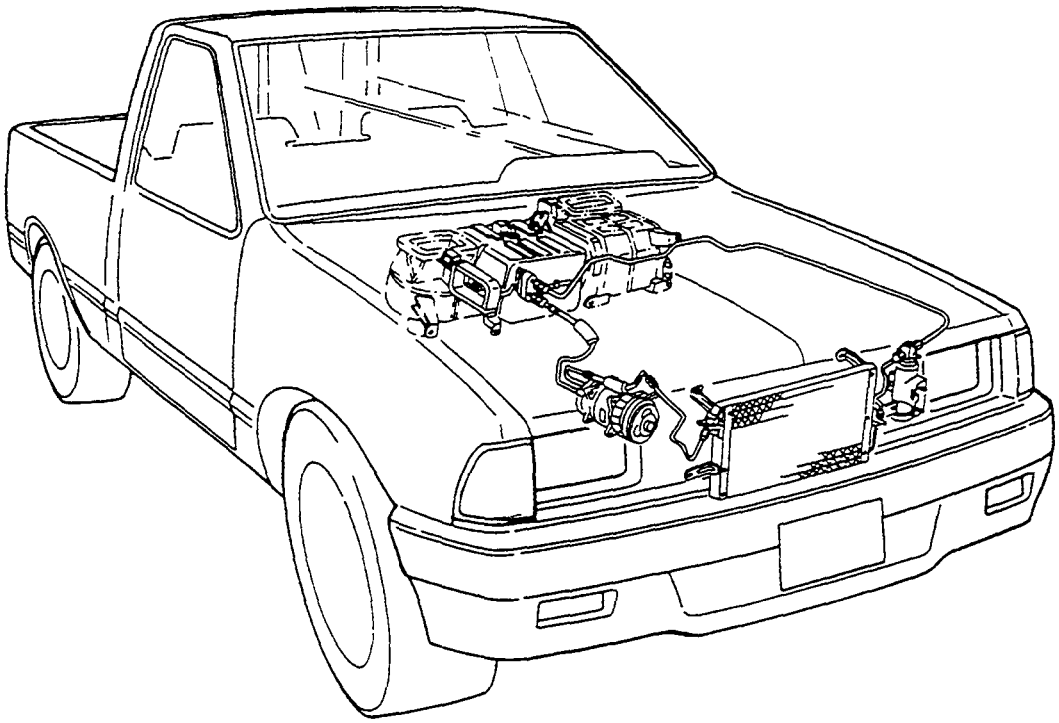

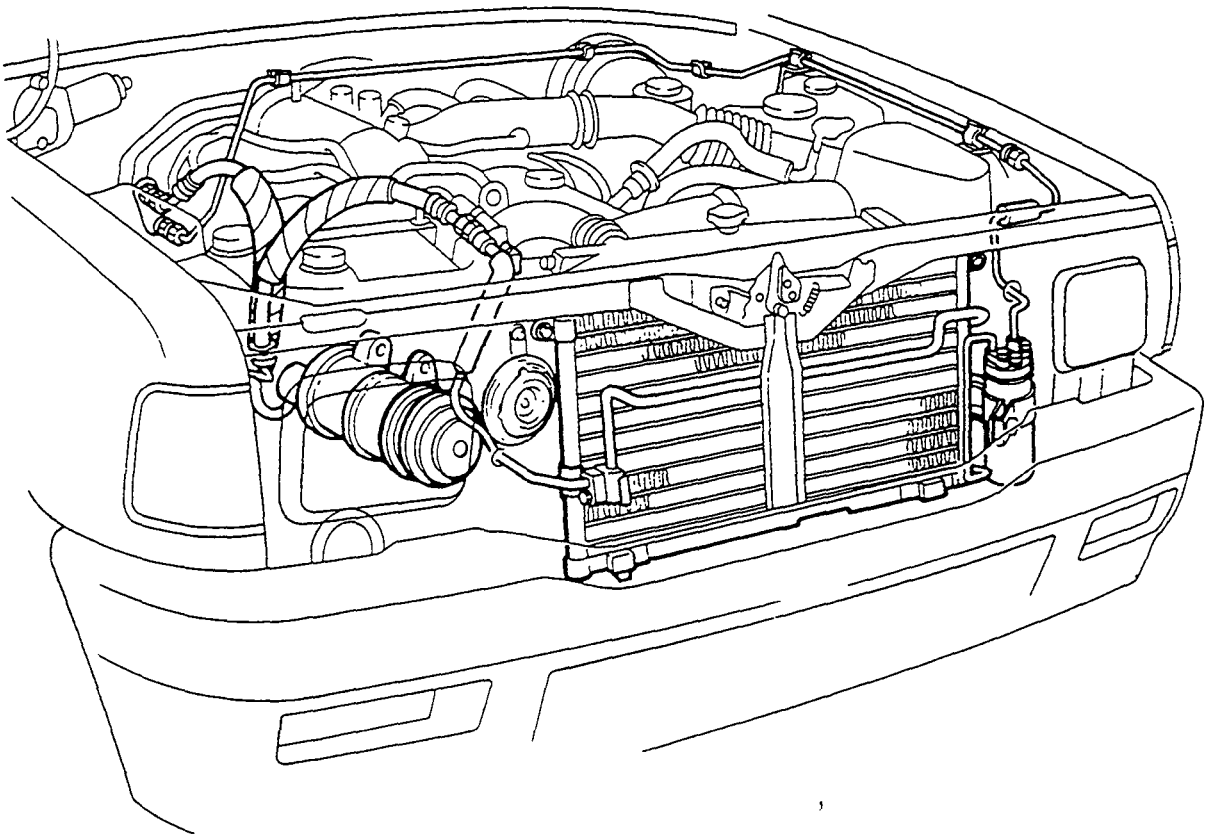

SYSTEM COOLING LINE

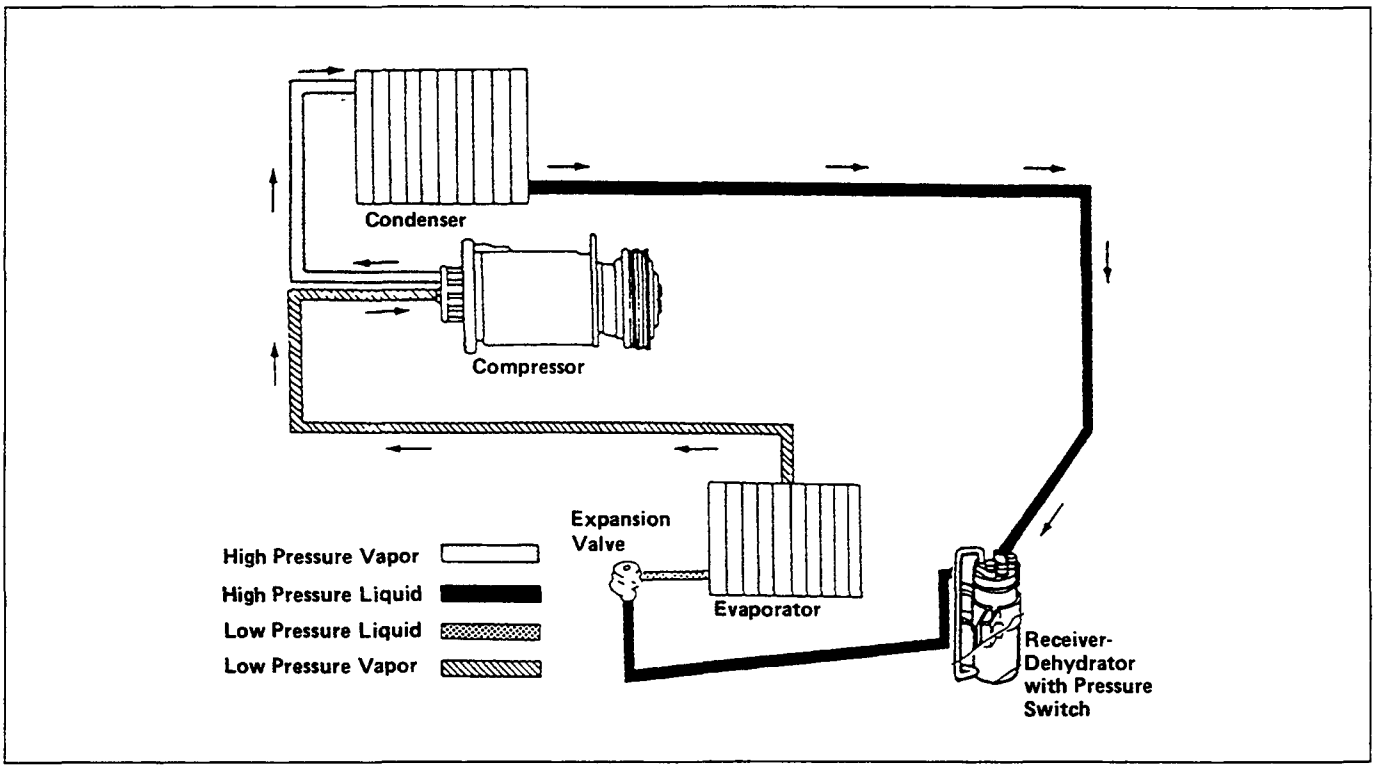

UNIT

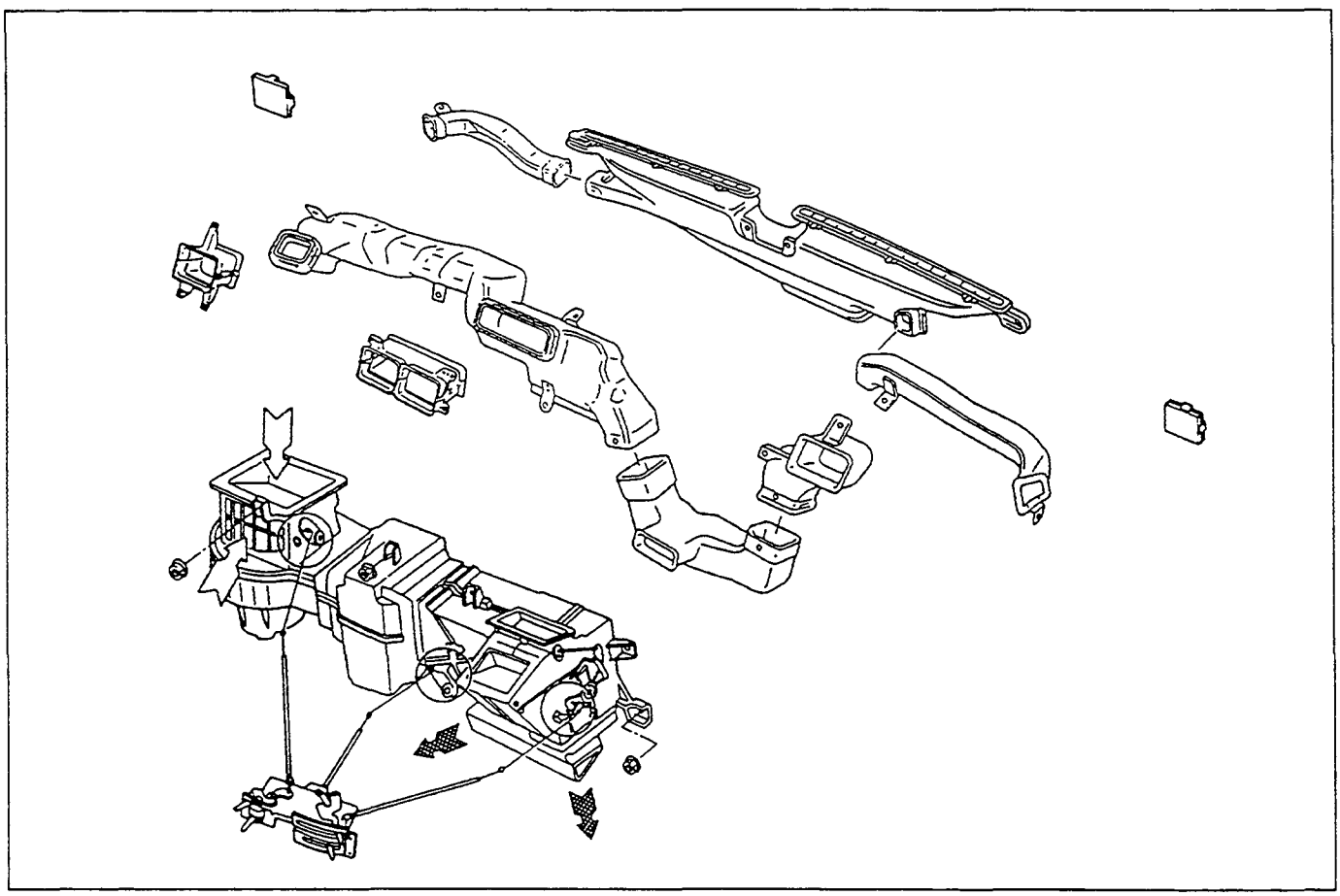

WIRING DIAGRAM

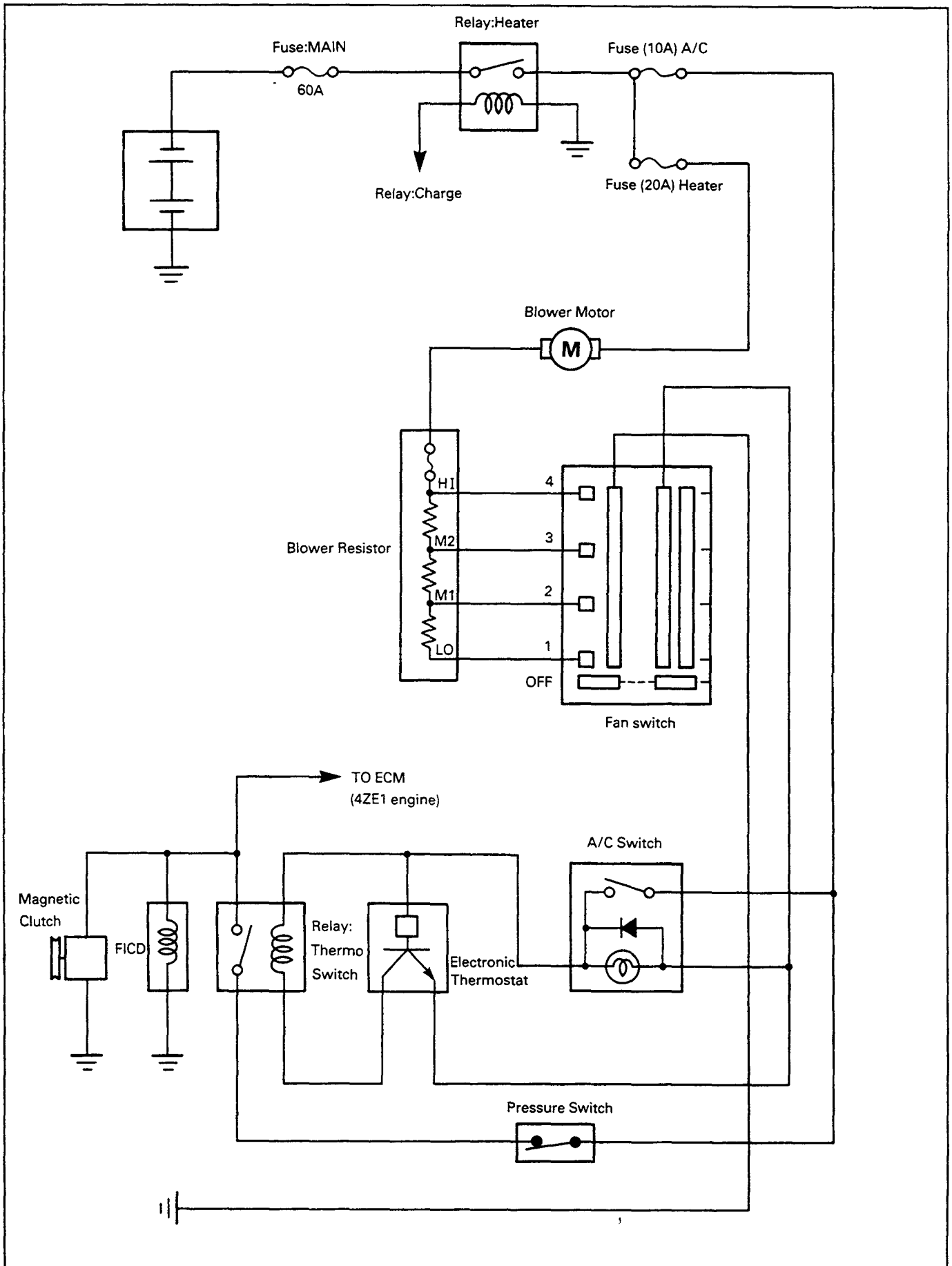

WIRING HARNESS TERMINAL POSITIONS

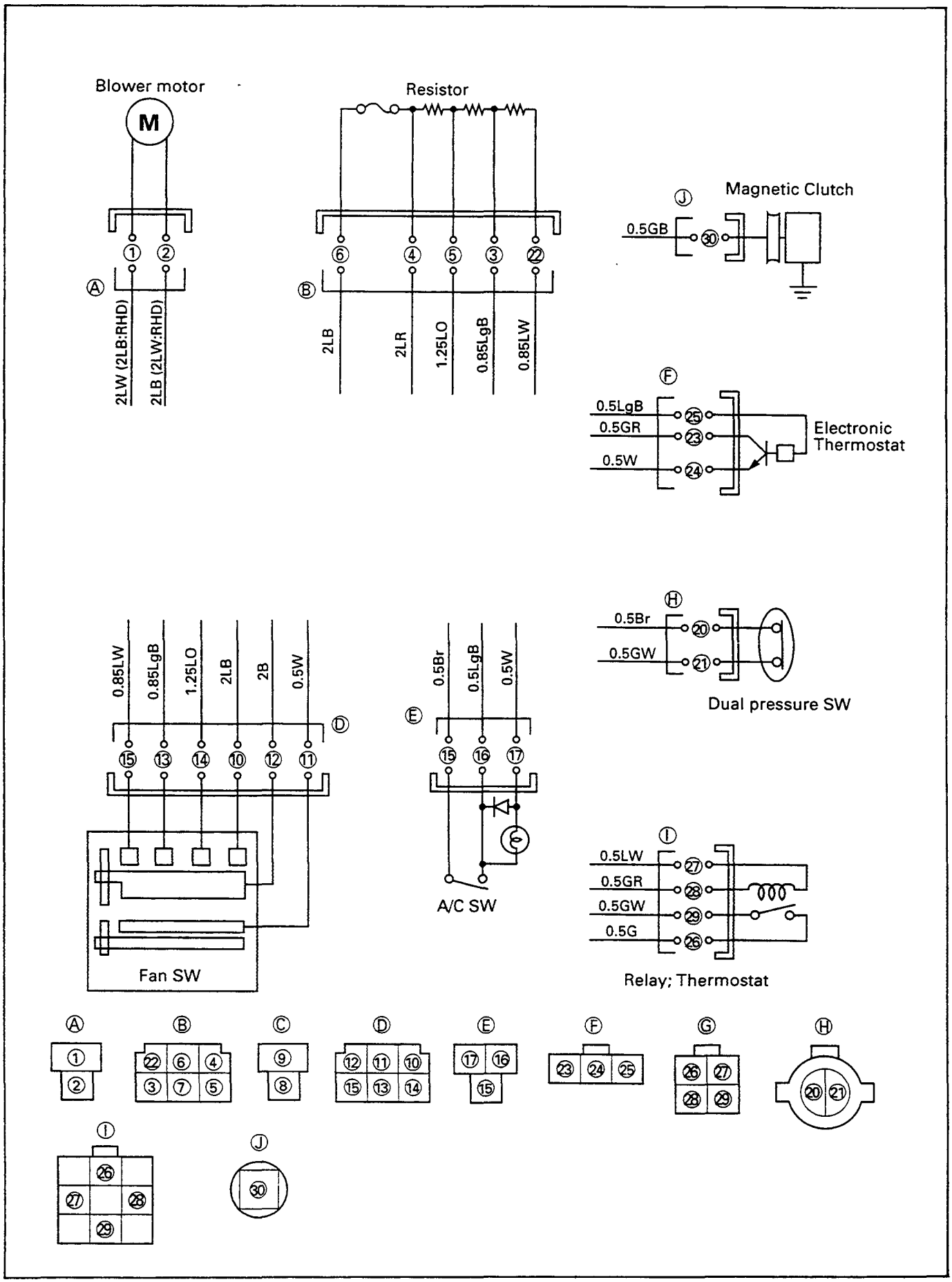

VENTILATION

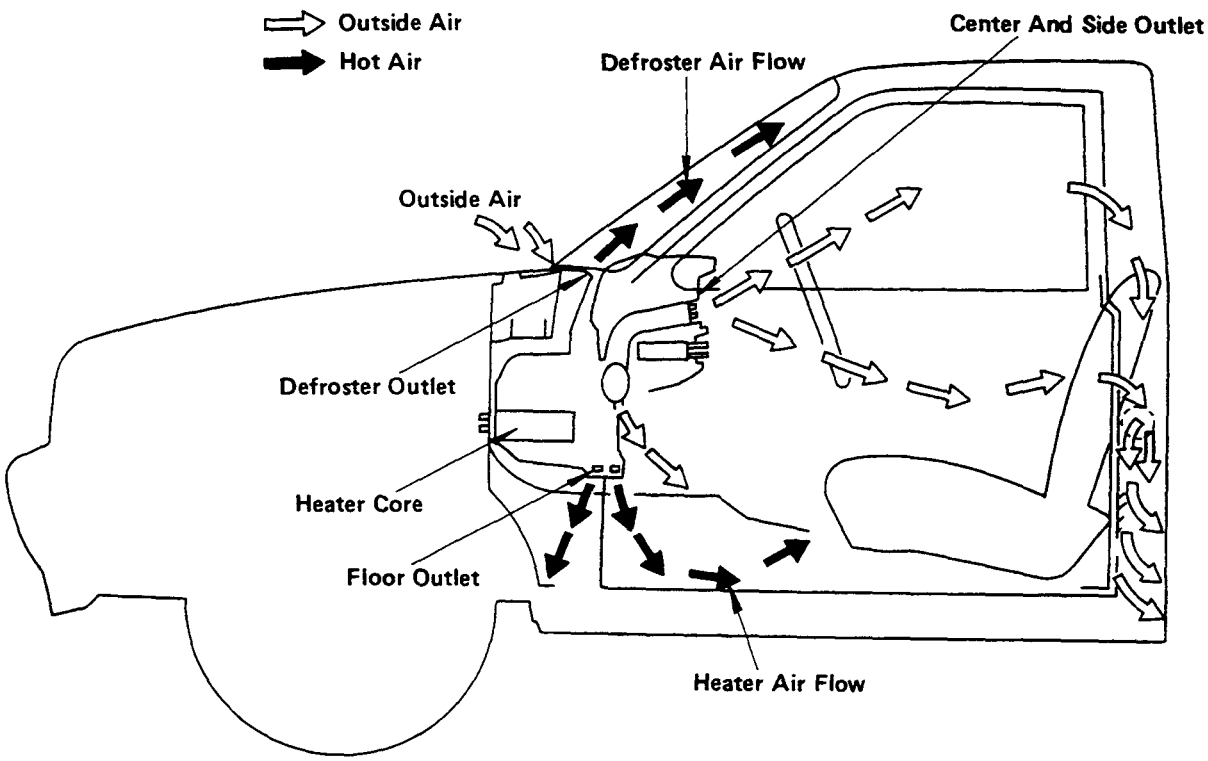

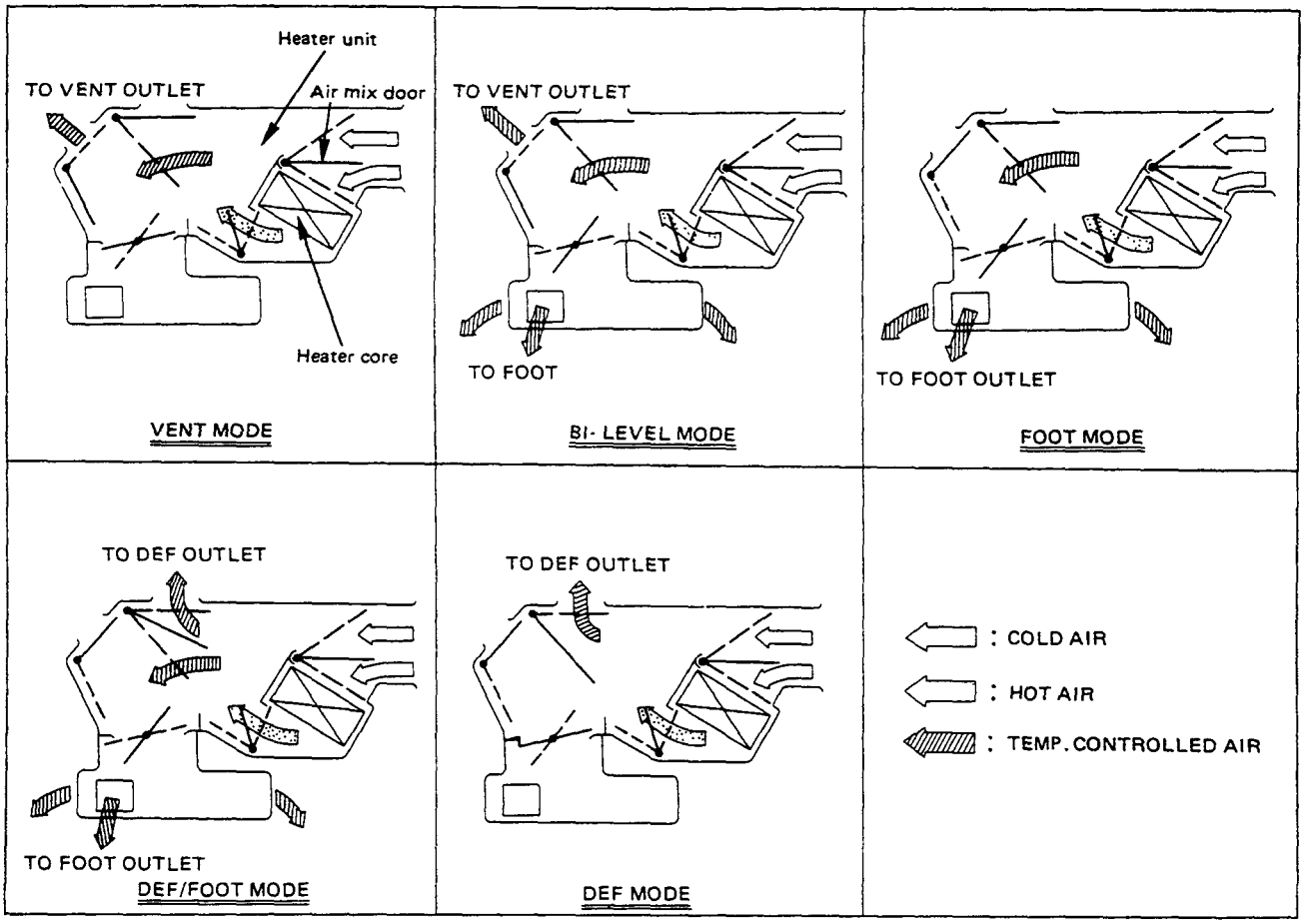

MAIN DATA AND SPECIFICATION

COMPRESSOR (SD7H13)			
Fitting type			Tube- "O"
Fitting location			Cylinder head
Number of cylinders			7
Bore			ø29.3mm
Stroke			27.4 mm
Displacement per revolution			129.2cc/rev
Maximum speed (absolute)			700rpm
Maximum speed (continuous)			6000rpm
Refrigerant			R-134a
Oil type			Sanden PAG SP-20
Oil amount			135cc ± 15cc
Clutch voltage			12V DC
Weight			6.9 kgs
Direction of rotation			Clockwise
HEATING UNIT			
Type			Air mix type
Core dimension	mm (in.)	(L x H x W)	161 (6.34) x 163 (6.42) x 45 (1.77)
Capacity	(kcal./hr.)		3700 kcal./hr. (280 m³/hr.)
BLOWER UNIT			
Type			Sirocco fan type
COOLING UNIT			
Type			Fin and tube evaporator
Evaporator element dimensions	mm (in.)	(L x H x W)	235 (9.25) x 224 (8.82) x 74 (2.91)
Evaporator capacity	(kcsl./hr.)		4200 kcal./hr. (470 m³/hr.)
CONDENSER			
Type			Aluminium louvered fins
Capacity	(kcal./hr.)		9400 kcal./hr.
REFRIGERANT			Type: R-134a Capacity: 0,75 kg ± 50 gramms
IDLE SPEED-UP CONTROL			Idle speed controlled by solenoid switch (Petrol models only)

SPECIAL PARTS AND FIXING NUTS AND BOLTS

COMPRESSOR ASSEMBLY

kg•m(lb.ft/N.m)

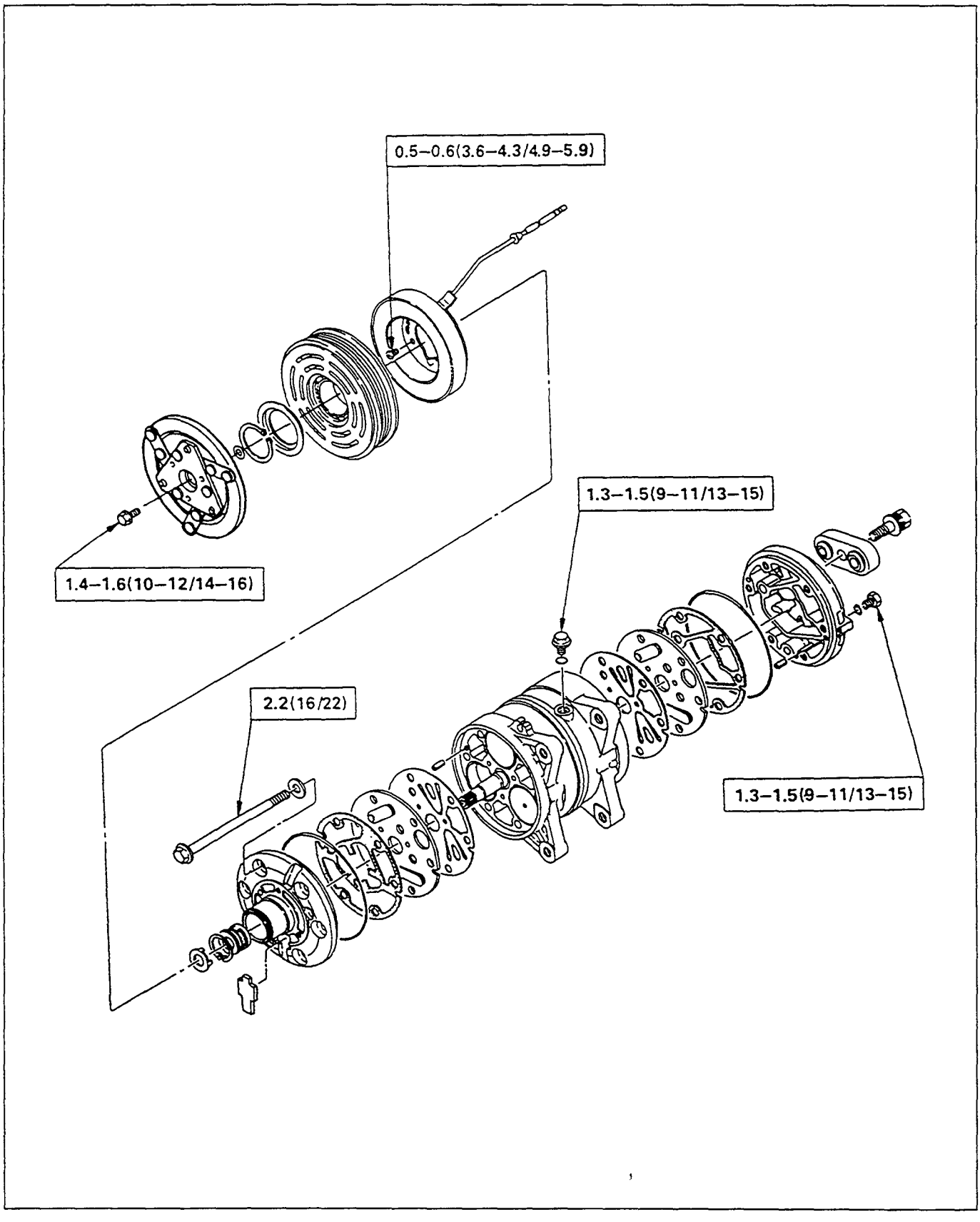

REFRIGERATION SYSTEM

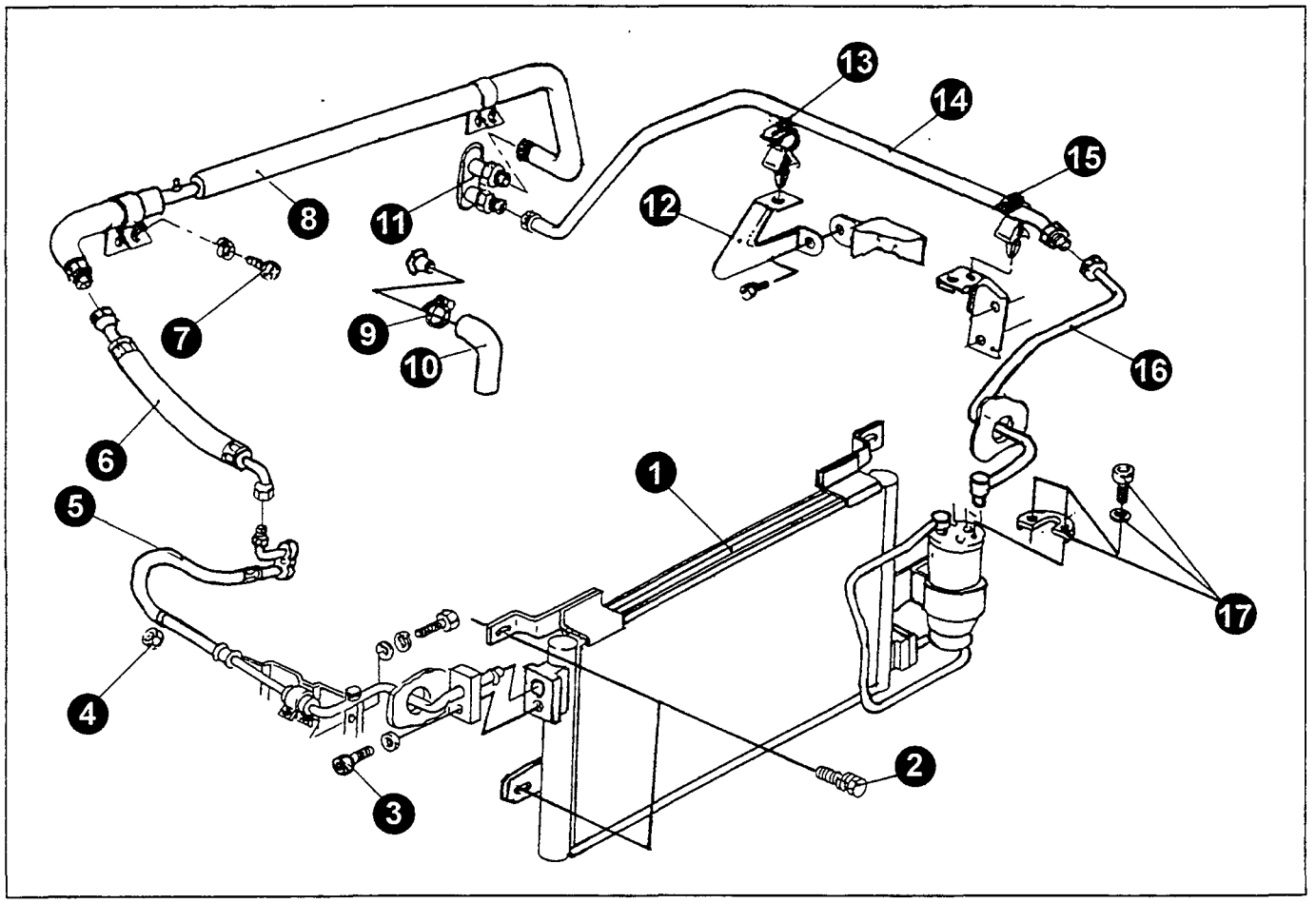

Parts List

1. Condensor
▲ 2. Bolt - condensor to body
▲ 3. Bolt - pipe assembly to condensor
▲ 4. Nut
5. Hose assembly - compressor to condensor
▲ 6. Hose assembly - compressor to joint
7. Screw
▲ 8. Pipe assembly - evaporator to joint
9. Clamp
10. Evaporator drain hose
11. Evaporator in/outlet
12. Bracket
13. Clip
▲ 14. Pipe assembly - evaporator to receiver/drier joint
15. Clip
▲ 16. Pipe assembly - receiver to joint
▲ 17. Bracket and bolt - pipe to receiver/drier fix

Important Operations - Installation

Tightening Torque:

2. Bolt - condensor to body 8 - 17 N.m
3. Bolt - pipe assembly to condensor 12 - 17 N.m
4. Nut 4 - 8 N.m
6. Hose assembly - compressor to joint 15 - 25 N.m
8. Pipe assembly - evaporator to joint 20 - 29 N.m
14. Pipe assembly - evaporator to receiver/drier joint 10 -20 N.m
16. Pipe assembly - receiver to joint 10 - 20 N.m
17. Bracket and bolt - pipe to receiver/drier fix 4 - 8 N.m

SERVICING

PRECAUTION FOR REFRIGERANT - 134a (R-134a) AIR CONDITIONING SYSTEM

R-12 and R134a systems require different types of lubricating oil. Components designed solely for use with one refrigerant and oil type must never be interchanged with components designed solely for use with another refrigerant and oil type.

R-134a Refrigerant:

- R-134a differs entirely from R-12 in its composition and, therefore, the two should never be mixed. Always change the specified amount of R-134a.
- The pressure characteristics of R-134a differ from those of R-12. The low pressure is lower, and the high pressure is higher.

R-134a Compressor oil:

- The R-134a system requires a synthetic (PAG) compressor oil whereas the R-12 system requires a mineral compressor oil. The two oils must never be mixed.
- Compressor (PAG) oil varies according to compressor model. Be sure to use oil specified for the model of compressor.

Oil Specification	RL 100S

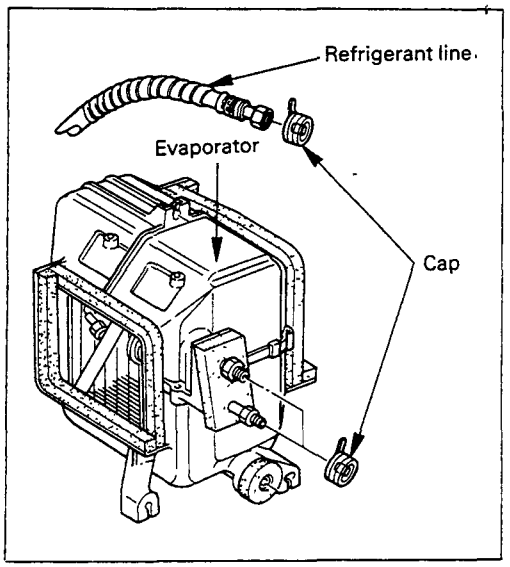

- The PAG compressor oil for the R-134a system tends to absorb moisture more quickly than mineral oil. When air conditioning parts are removed for servicing, all the open ends of parts and components must be sealed with caps to keep out contaminants.
- The PAG compressor oil must be stored in metal containers, not in plastic containers.

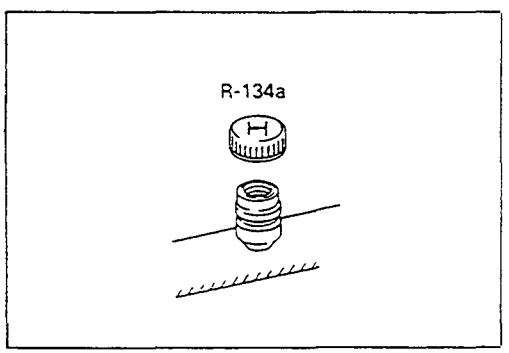

Service charge valve:

- The diameter of the service charge valve for the R-134a system is made larger than that for the R-12 system to prevent cross-contamination. In addition, the screw-in type joint of the R-12 system is replaced with a quick joint type in the R-134a system.

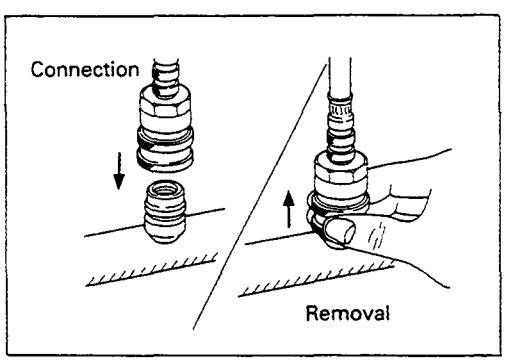

- To prevent refrigerant from escaping during installation and removal of charging hoses from the service charge valves, quick-joint type fittings are used.
  Connection: Push on firmly until locked (a "click" will be heard).
  Removal: Hold the grip-ring and pull to remove.

- Air conditioning manifold gauges, charging hoses and other service tools designed exclusively for the R-134a system must be used with this vehicle.

No.	R-134a
1	M12 × 1.75
2	M10 × 1.5
3	M14 × 1.25
4	Quick joint type

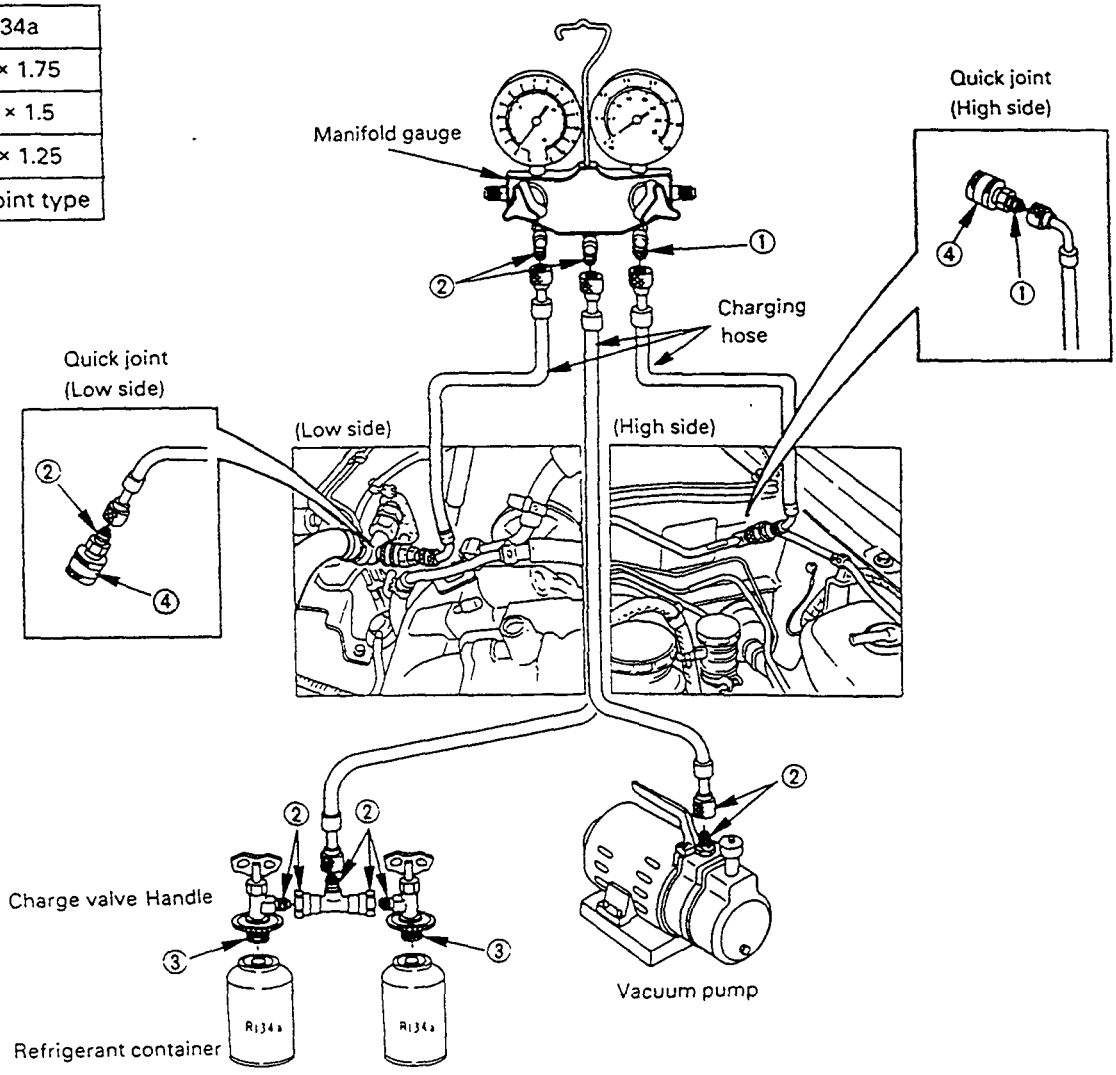

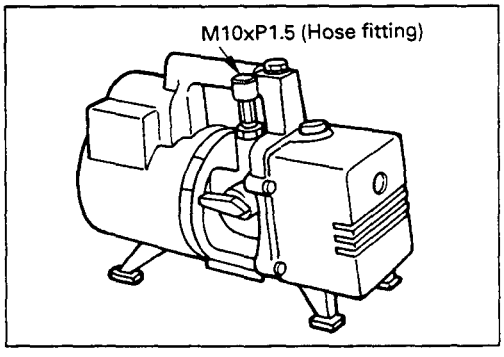

- Do not use the same vacuum pump for evacuating the R-134a and R-12 systems interchangeable (The vacuum pump hose fitting is a M10 x 1.5).
- R-134a vacuum pumps must have a positive shutoff valve.

CAUTION:
Never use the same vacuum pump for both R-134a and R-12 systems, as cross contamination of compressor oil may occur.

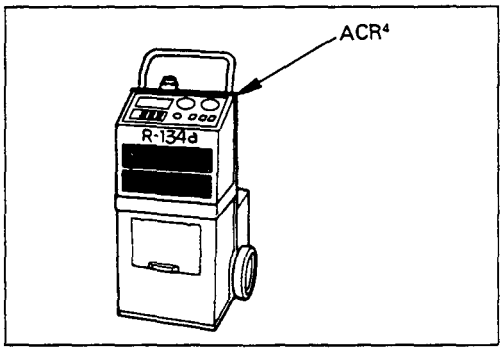

Refrigerant Recovery, Recycling and Charging

- Avoid releasing the R-134a into the atmosphere. Use the R-134a Refrigerant Recovery/Recycling/ Recharging System or equivalent to recover and recycle R-134a. Note that this system is not interchangeable between the R-134a and R-12 systems.

Refrigerant Leak Inspection

- The flame type gas leak detector for the R-12 system cannot be used with the R-134a system.
- The electric leak detector for the R-12 cannot be used with the R-134a system as the R-134a particles are far smaller than the R-12 molecules and, therefore, may not be always detected. Use leak detectors designed exclusively for the R-134a system.

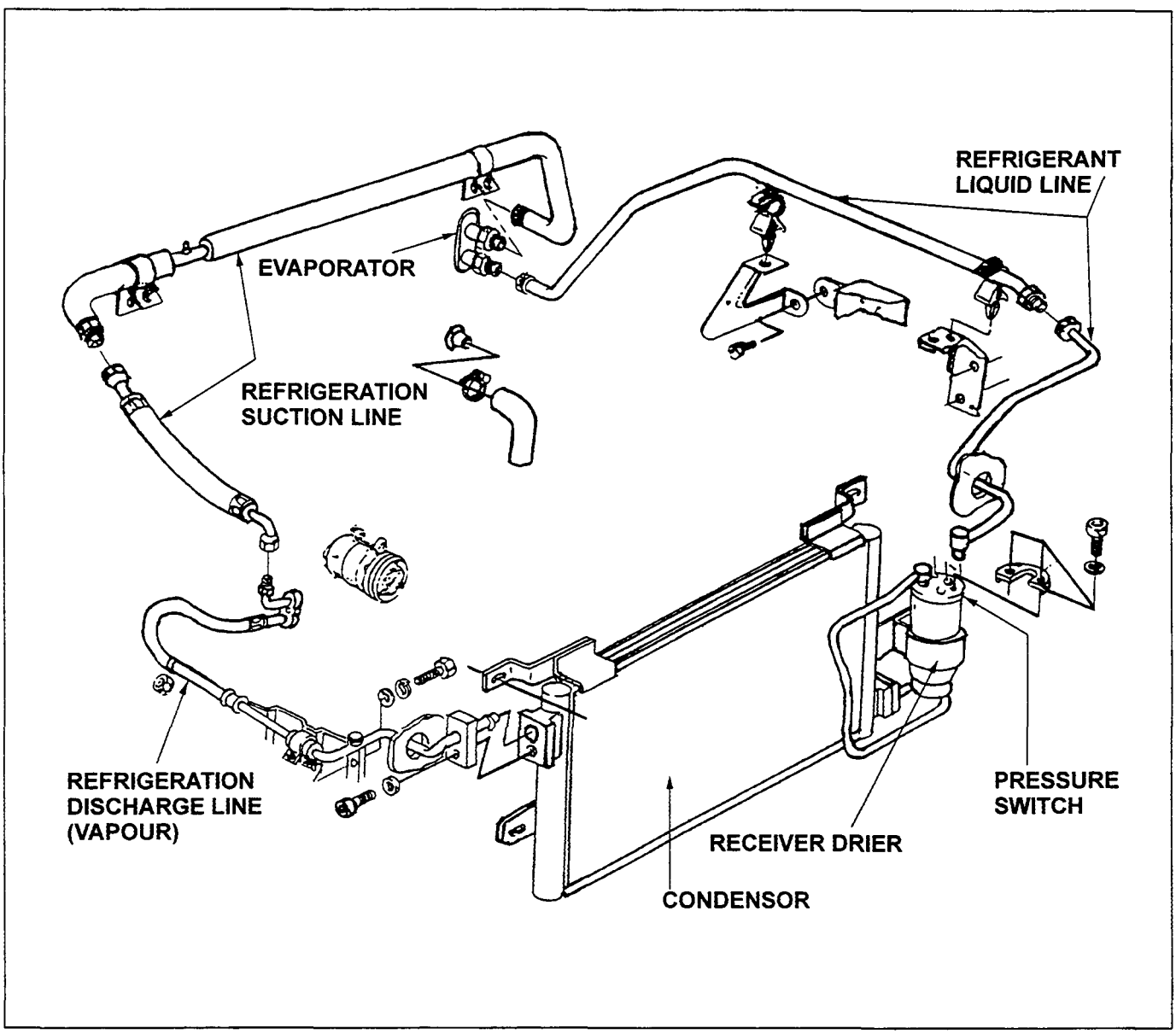

PRECAUTIONS FOR REPLACEMENT OT REPAIR OF R-134a AIR CONDITIONING PARTS

There are certain procedures, practices and precautions that should be followed when servicing air conditioning systems:

- Keep your work area clean.
- Always wear safety goggle and protective gloves when working on refrigerant systems.
- Beware of the danger of carbon monoxide fumes caused by running the engine.
- Beware of discharged refrigerant in enclosed or improperly ventilated garages.
- Always disconnect the negative battery cable and discharge and recover the refrigerant whenever repairing the air conditioner system.
- When discharging and recovering the refrigerant, do not allow refrigerant to discharge too fast; it will draw compressor oil out of the system.
- Keep moisture and contaminants out of the system. When disconnecting or removing any lines or parts, use plugs or caps to close the fittings immediately. Never remove the caps or plugs until the lines or parts are reconnected or installed.
- When disconnecting or reconnecting the lines, use to wrenches to support the line fitting, to prevent from twisting or other damage.
- Always install new O-rings whenever a connection is disassembled.
- Before connecting any hoses or lines, apply new specified compressor oil to the O-rings.
- When removing and replacing any parts which require discharging the refrigerant circuit, the operations described in this section must be performed in the following sequence:

FOREIGN MATERIAL IN THE SYSTEM

Whenever foreign material is sound in the system, it must be removed before restoring the system
to operation. In the event of compressor mechanical failure, must perform the following
operations:

NOTE:
Fasteners must be removed carefully to prevent the spillage of refrigerant oil.

1. Remove the compressor.
2. Remove the receiver-dryer and discard the unit.
3. Flush the condensor to remove any foreign material which has been pumped into it.
4. Disconnect the refrigerant line from the condensor at the inlet connection of the expansion valve.
5. Inspect the refrigerant line for the presence of metal chips or other foreign material.
6. Flush any foreign material from the refrigerant line.
7. Reconnect the refrigerant line to the expansion tube.
8. Install the replacement compressor and the receiver dehydrator.
9. Add the necessary quantity of refrigerant oil to the system.
10. Evacuate, charge, and check the system.

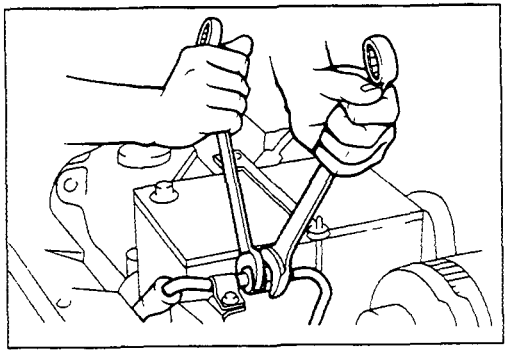

REPAIR OF REFRIGERANT LEAKS

Refrigerant Line Connections

Install new O-rings, if required. When disconnecting or connecting new lines, use two wrenches to prevent the connecting portion from twisting or becoming damaged.

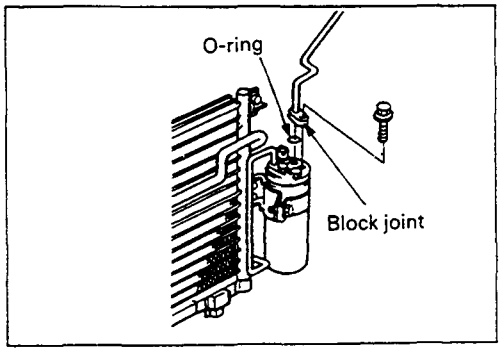

When connecting the refrigerant line at the block joint, securely insert the projecting portion of the joint portion into the connecting hole on the unit side and secure with a bolt.

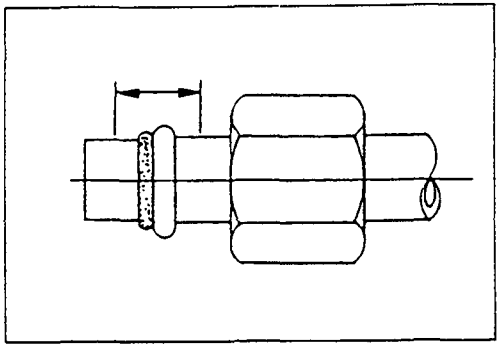

Apply specified compressor oil to the O-rings prior to connecting.

CAUTION:
Compressor (PAG) oil to be used varies according to compressor model. Be sure to apply oil specified for the model of compressor.

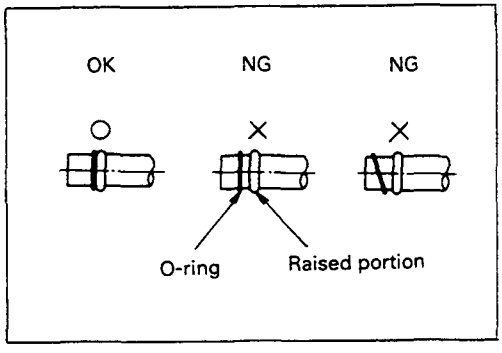

O-rings must be closely aligned with raised portion of refrigerant line.

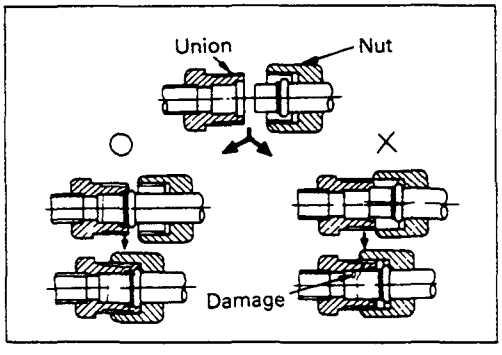

Insert nut into union. First tighten nut by hand as much as possible. Then, tighten nut to specified torque.

(Refer to "Refrigeration System" on page 9 of this section).

LEAK AT REFRIGERANT LINE CONNECTIONS

1. Check the torque on the refrigerant line fitting and, if too loose, tighten to the specified torque.
   - Use two wrenches to prevent twisting and damage to the line.
   - Do not over tighten.
2. Perform a leak test on the refrigerant line fitting.
3. If the leak is still present, discharge and recover the refrigerant from the system.
4. Replace the O-rings.
   - O-rings cannot be reused. Always replace with new ones.
   - Be sure to apply to specified compressor oil to the new O-rings.

5. Retighten the refrigerant line fitting to the specified torque.
   - Use two wrenches to prevent twisting and damage to the line.

6. Evacuate, charge and retest the system.

LEAK IN THE HOSE

If the compressor inlet or outlet hose is leaking, the entire hose must be replaced. Refrigerant hose must not be cut or spliced for repair:

1. Locate the leak.
2. Discharge and recover the refrigerant.
3. Remove the hose assembly.
   - Cap the open connections at once.
4. Connect the new hose assembly.
   - Use two wrenches to prevent twisting or damage to the hose fitting.
   - Tighten the hose fitting to the specified torque.

5. Evacuate, charge and test the system.

COMPRESSOR LEAKS

If the leaks are located around the compressor shaft seal or shell, replace the compressor.

REPLACEMENT OF COMPONENT PARTS

When replacing system component parts, supply the following amount of oil to the component parts to be installed.

Component parts to be installed	Amount of oil (cc)
Evaporator	50
Condenser	30
Receiver/drier	30
Refrigerant line (one piece)	10

RECOVERY, RECYCLING, EVACUATION AND CHARGING

Handling Refrigerant-134a

Air conditioning systems contain R-134a.
This is a chemical mixture which requires special handling procedures to avoid personal injury.

- Always wear safety goggles and protective gloves.
- Always work in a well-ventilated area. Do not weld or steam clean on or near any vehicle-installed air conditioning lines or components.
- If R-134a should come in contact with any part of the body, flush the exposed area with cold water and immediately seek medical help.
- If it is necessary to transport or carry any container of R-134a in a vehicle, do not carry it in the passenger compartment.
- If it is necessary to fill a small R-134a container from a large one, never fill the container completely. Space should always be allowed above the liquid for expansion.
- R-134a and R-12 should never be mixed as their compositions are not the same.
- R-134a PAG oil tends to absorb moisture more quickly than R-12 mineral oil and, therefore, should be handled more carefully.
- Keep R-134a containers stored below 40°C (100°F).

WARNING

- **Should R-134a contact your eye(s), consult a doctor immediately.**
- **Do not rub the affected eye(s). Instead, splash quantities of fresh cold water over the affected area to gradually raise the temperature of the refrigerant above the freezing point.**
- **Obtain proper medical treatment as soon as possible. Should the R-134a touch the skin, the injury must be treated the same as skin which has been frostbitten or frozen.**

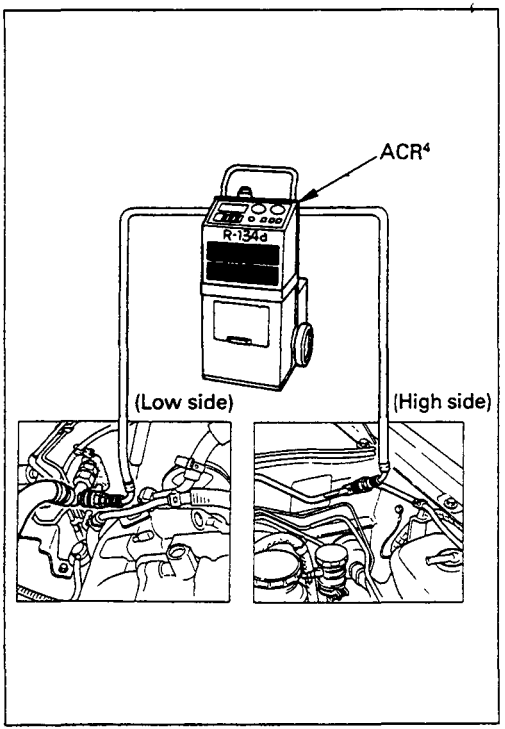

REFRIGERANT RECOVERY

The refrigerant must be discharged and recovered by using the ACR4 (R-134a Refrigerant Recovery/ Recycling/ Recharging System) or equivalent before removing or installing air conditioning parts.

1. Connect the high and low charging hoses of the ACR4 (or equivalent) as shown.
2. Recover the refrigerant by following the ACR4 Manufacturer's Instructions.
3. When a part is removed, put a cap or a plug on the connecting position so that dust, dirt or moisture cannot get into it.

REFRIGERANT RECYCLING

Recycle the refrigerant recovered by the ACR4 or equivalent. For the details of the actual operation, follow the steps in the ACR4 Manufacturer's Instructions.

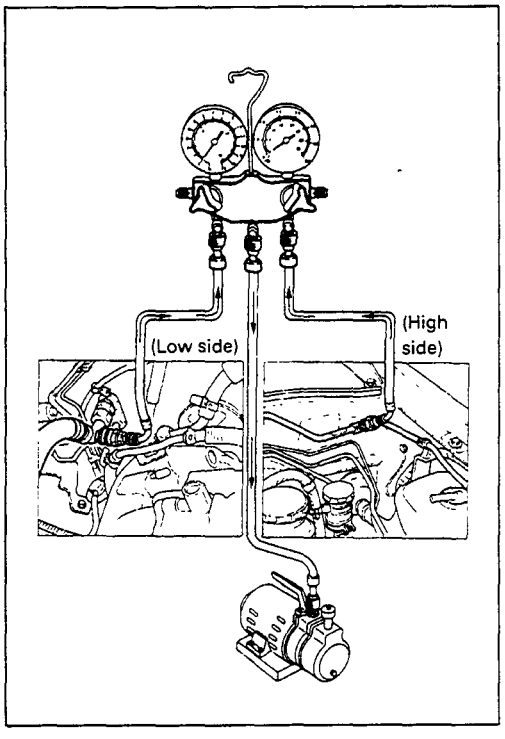

EVACUATING (DRAW VACUUM) THE AIR-CON SYSTEM AND RECYCLING REFRIGERANT

Open both blue (liquid) and red (vapour) valves on tank and switch machine on. Programme the vacuum time to 30 mins, press enter. Open both red (high side) and blue (low side) valves on the control panel. Press button marked "Vacuum" to start evacuating the A/C system. The digital display counts down the remaining evacuation time in minutes and seconds.

NOTE:
If "Oil" flashes on the display, maintenance must be called to change the vacuum pump oil.

NOTE:
If code U-H1 is on digital display, there is high pressure to the vacuum pump. Remove charging hoses from the vehicle and press "Recover" to recover all the gas in the hoses. Draw vacuum for 5 mins and press "Hold/ Continue". Both gauges should hold the vacuum for at least 2-5mins.

NOTE:
If gauges rise there is a leak. Refer to Leak Test Proceed.

PRESSURE TEST THE SYSTEM BY USING NITROGEN AND REPAIR THE LEAK

If both gauges hold vacuum for the 2-5mins, press "Hold/ Continue" to continue to draw vacuum on the system. The vacuum sequence continues for the remaining programmed length of time. (the display counts the time down to zero mins). The digital display shows the message "CPL" to indicate that evacuation is complete.

Whilst the vacuum pump is running, the recycling process begins automatically, 5 secs after the vacuum pump starts. The "Recycle" message illuminates to indicate the unit is recycling the refrigerant to the tank.

NOTE:
If the moisture indicator is green, you may use the refrigerant. If the moisture indicator is yellow on completion of recycling, the filter-drier is saturated. Maintenance must be called to replace the filter.

CHARGING THE REFRIGERANT SYSTEM

There are various methods of charging refrigerant into the air conditioning system. These include using the ACR4 (R-134a Refrigerant Recovery/Recycling/Recharging/System) or equivalent and direct charging with a manifold gauge charging system.

ACR⁴ (115V 60Hz):
5-8840-0629-0 (J-39500-A)

ACR⁴ (220-240V 50/60Hz):
5-8840-0630-0 (J-39500-220A)

ACR⁴ (220-240V 50/60Hz Australian model):
5-8840-0631-0 (J-39500-220ANZ)

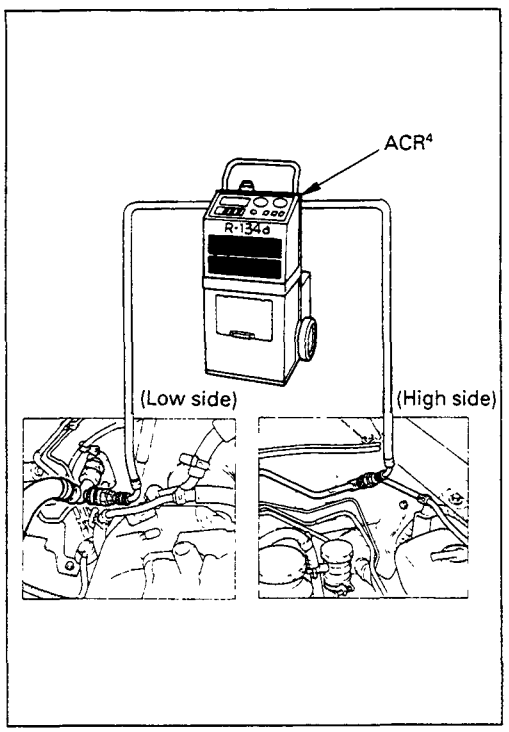

Charging procedure

- **ACR⁴ (or equivalent) method**

1. Open both blue (liquid) and red (vapour) valves on tank and switch machine on.

2. Unscrew suction caps on compressor: connect red (high pressure) hose to discharge valve (marked D) and blue (low pressure) hose to suction valve (marked S).

3. At vacuum time amount, press "Shift/Reset" and set charge amount to 0.75 kg. Press "Enter".

4. Open both valves on the units control panel.

5. Press the "Chg" key on the key pad. The digital display shows the message "Automatic" and the amount of refrigerant programmed.

NOTE:
You will hear the solenoid open & the display will count down to zero.
The message "Cpl" displays when charging is completed.

6. If the refrigerant transfer is too slow, the unit will beep. If the display does not show the message "Check Refrigerant", close the high side valve and start the A/C system to pull the remainder of the charge onto the system.

7. If the charge will not completely transfer and the display shows the message "Check Refrigerant", press the "Hold/Cont" key to interrupt the cycle then press "Reset".

8. The refrigerant in the air con. system must then be recovered using the Recover Refrigerant instructions.

9. New refrigerant must be added to the tank using the "Adding Refrigerant to the Tank". Once tank is filled, return to step 1of the "Charge the System".

10. Close both high and low side gauges on the control panel.

11. Start the vehicle. Switch on the air con. Ensure that the air control levers are on "Recirculate": Fan speed on maximum and the centre vents are open.

12. Le the system run until the gauge pressure readings stabilise (compare the readings to the system operating specifications).

13. Switch off the vehicle. Check all connections with a refrigerant leak detector.

14. If a leak is present, recover the refrigerant in the system and repair the leak.

NOTE:
The amount of oil recovered in the oil catch bottle (during the evacuation process) has to be returned into the system before charging.

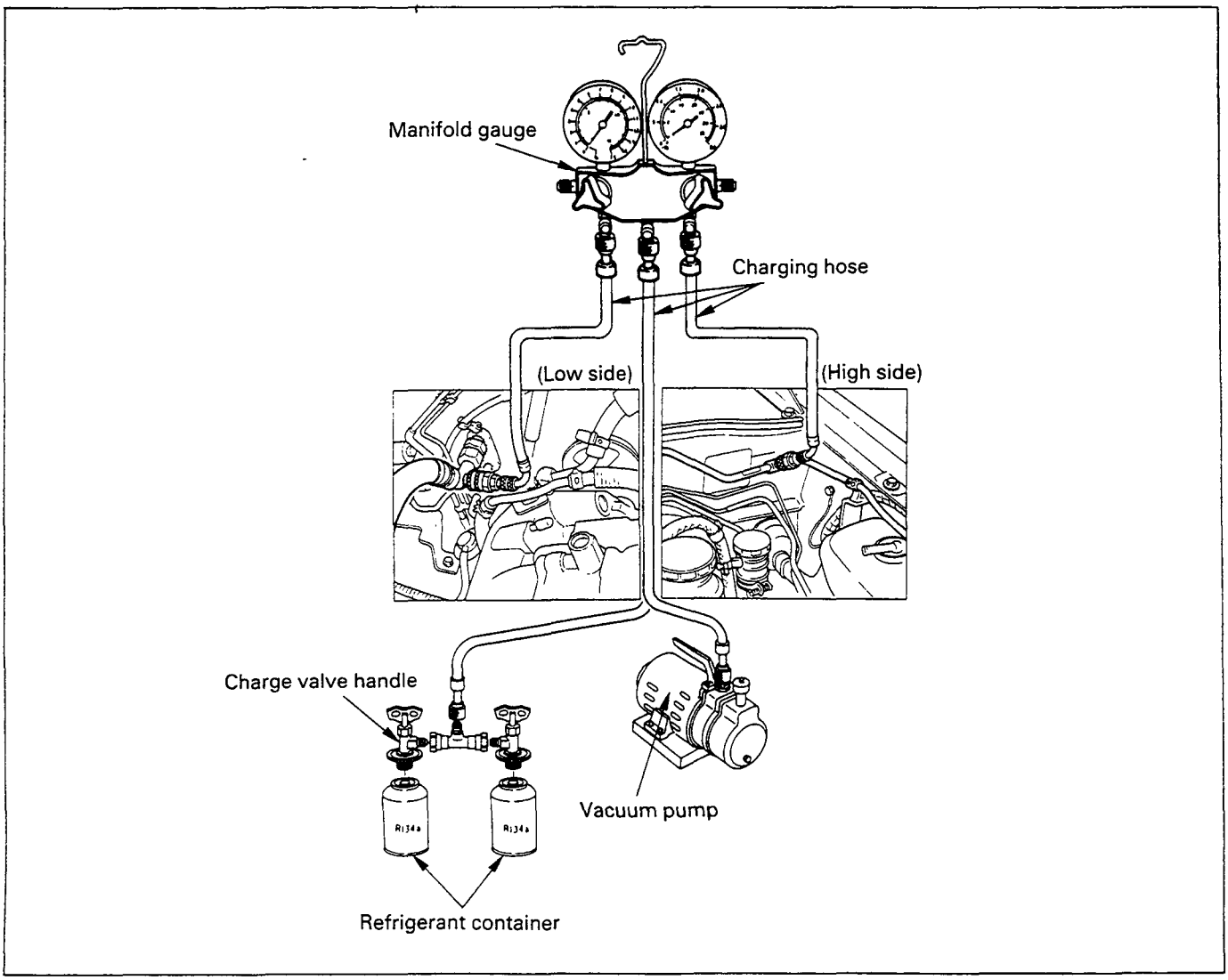

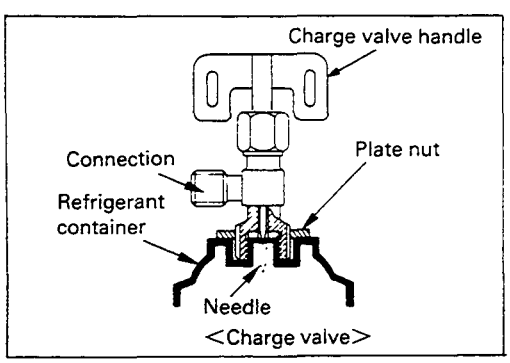

- **Direct charging with a manifold gauge charging station method**

Handling the charge valve handle when installing refrigerant container.

1) Before attaching the charge valve to the refrigerant container, turn the charge valve handle counterclockwise until the needle is fully retracted.
2) Turn the plate nut counterclockwise until it reaches its highest position relative to the charge valve.
3) Install the charge valve onto the refrigerant container.
4) Turn the plate nut clockwise and connect the center hose of the manifold gauge to the charge valve.
5) Tighten the plate nut sufficiently by hand. Then turn the charge valve handle clockwise to lower the needle and bore a hole in the refrigerant container.
6) Turn the charge valve handle counterclockwise to raise the needle. The refrigerant in the refrigerant container is charged into the air conditioning system by the operation of the manifold gauge.
   - Be absolutely sure not to reuse the emptied refrigerant container.

1. Make sure the evacuation process is correctly completed.

2. Connect the centre-hose of the manifold gauge to the refrigerant container.
   - Turn the charge valve handle counterclockwise to purge the charging line and purge any air exiting in the centre-hose of the manifold gauge.

3. Open the low-pressure hand valve and charge the refrigerant about 200g (0.44 lbs).
   - Make sure the high-pressure hand valve is closed.
   - Avoid charging the refrigerant by turning the refrigerant container upside down.

4. Close the low-pressure hand valve of the manifold gauge.
   - Check to ensure that the degree of pressure does not change.

5. Check the refrigerant leaks by using a R-134a leak detector.
   - If a leak occurs, repair the leak connection, and start all over again from the first step of evacuation.

6. If no leaks are found, open the low-pressure hand valve of the manifold gauge. Then continue charging refrigerant of the system.
   - When charging the system becomes difficult:
   1. Run the engine at 1,300~1,500 rpm and open all the vehicle doors.
   2. A/C switch is "ON".
   3. Set the fan control knob (fan switch) to its highest position.

WARNING:
Be absolutely sure not to open the high-pressure hand valve. Should the high-pressure hand valve be opened, the high-pressured refrigerant gas would flow backward, and this may cause the refrigerant container to burst.

7. When the refrigerant container is emptied, use the following procedure to replace it with a new refrigerant container.
   1. Close the low-pressure hand valve.
   2. Raise the needle upward and remove the charge valve.
   3. Reinstall the charge valve to the new refrigerant container.
   4. Purge any air existing in the centre hose of the manifold gauge.

8. Charge the system to the specified amount and then close the low-pressure hand valve.

Refrigerant Specified Amount	g
750	

- Check the high and low pressure valve of the manifold gauge.
- Check for refrigerant leaks by using a R-134a leak detector.

Immediately after charging refrigerant, both high and low pressures are slightly high and to the left of the gauge, but they settle down to the guide pressure valves as shown below:

- Ambient temperature; 30~35˚C (86~95˚F)
- Guide pressure

High pressure side;
Approx. 1373~1667 kPa (14~17 kg•cm²/199~242 PSI)
Low pressure side;
Approx. 127~245 kPa (1.3~2.5 kg•cm²/18~36 PSI)

9. Close the low pressure hand valve and charge valve of the refrigerant container.

10. Stop the air conditioning and the engine.

11. Disconnect the high and low pressure hoses from the manifold gauge fittings.

Pipe diameter	Screw size	Pipe material	Closing torque; N.m)
8 mm (0.31 in)	M16 x 1.5	Aluminium tube	(0-20)
12 mm(0.47 in)	M20 x 1.5	Aluminium tube	(5-25)
16 mm (0.63 in)	M22 x 1.5	Aluminium tube	(20-29)

NOTE:
If steel to aliminimum connections are being made, use the torque values for aluminimum.

REFRIGERANT HOSE FAILURE

After a leak or rupture has occurred in a refrigerant hose, or if a fitting has loosened and caused a considerable loss of refrigerant and oil, the entire system should be flushed and recharged after repairs have been made.

If the system has been opened to atmosphere for any prolonged period of time, the receiver-dryer should be replaced.

GENERAL NOTES

1. A small amount of refrigerant oil must be applied to all "O" rings and fittings.

2. Cleanliness in storage and handling of all aircon components is vital to good aircon performance.

3. Sealing caps on the various components should not be removed until immediately before fitment.

4. Torques on all hose fittings are extremely important. Over or under tightening will cause leaks, if not immediately, then later in the field.

The PAG compressor oil for the R-134a system needs to absorb moisture more quickly than mineral oil. When air conditioning parts are removed for servicing, all the open end of parts and components must be sealed with caps to keep out contaminants.

The PAG compressor oil must be stored in metal containers, not in plastic containers.

CONDENSER

REMOVAL AND INSTALLATION

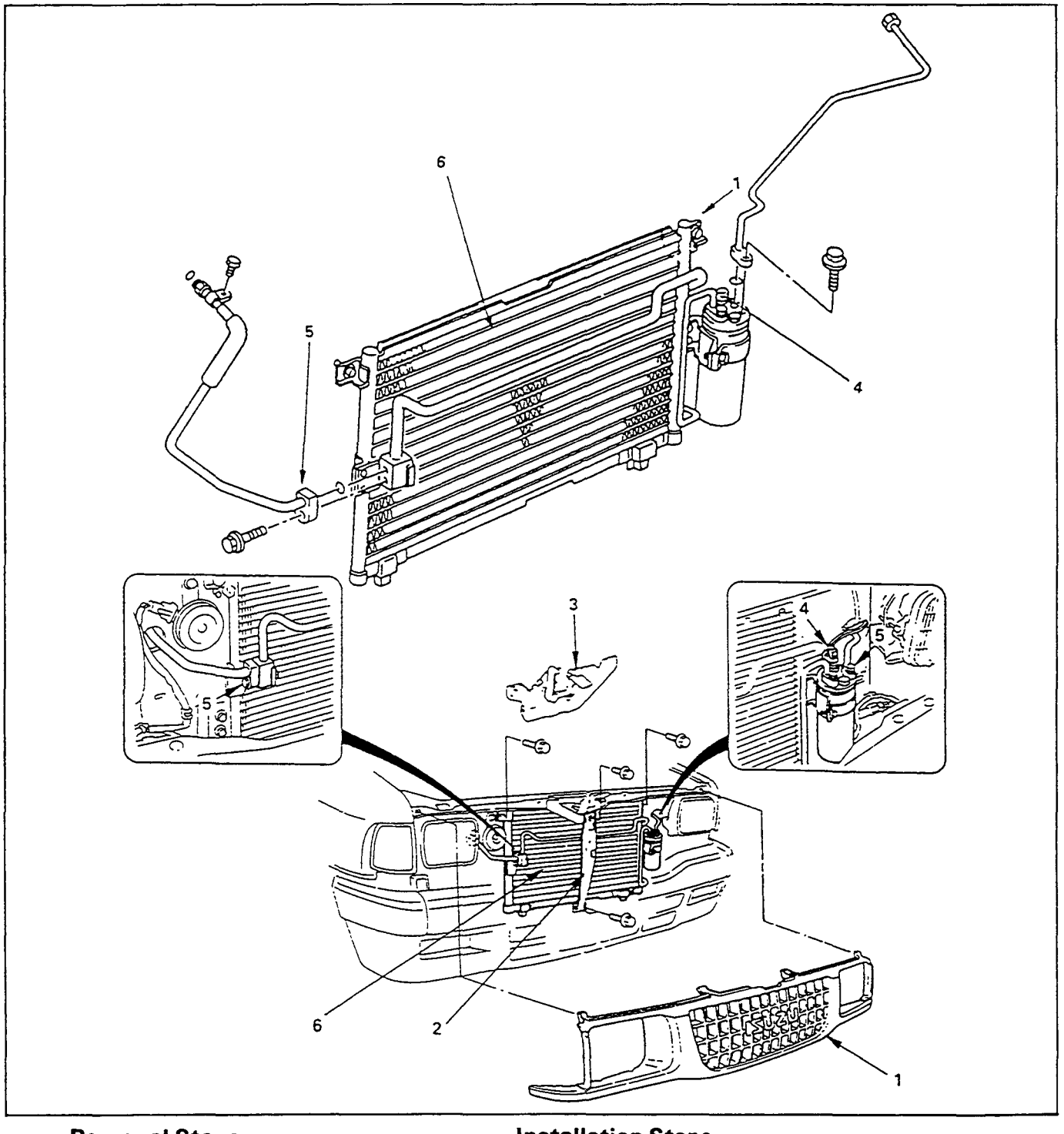

Removal Steps

1. Radiator grille
2. Engine hood front end stay
3. Engine hood lock
4. Pressure switch connector
5. Refrigerant line
6. Condenser

Installation Steps

To install, follow the removal procedure in reverse order.

RECEIVER DEHYDRATOR

REMOVAL AND INSTALLATION

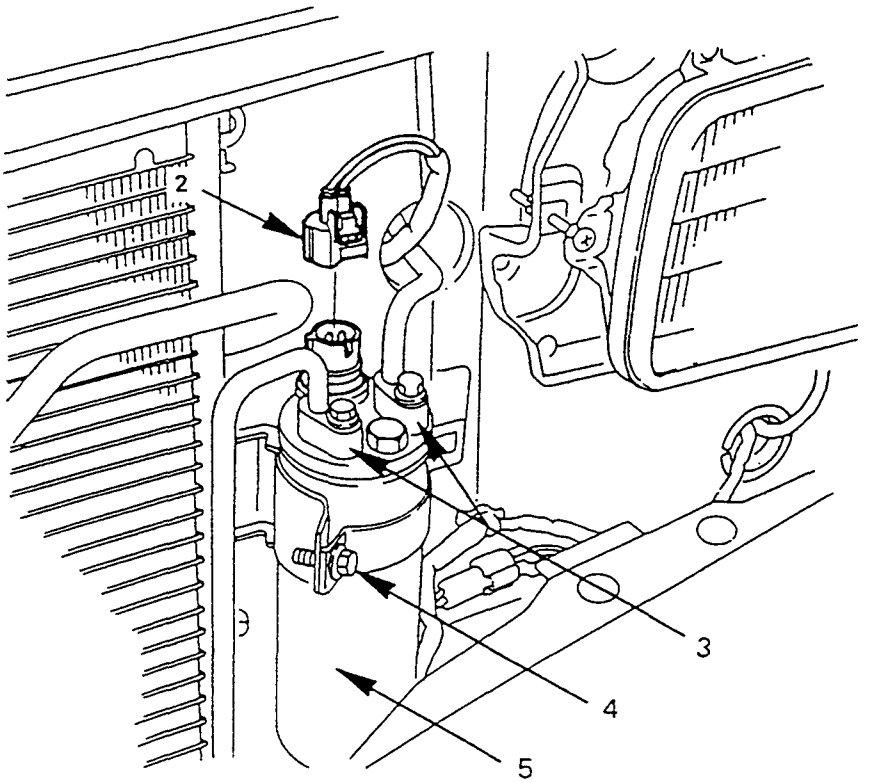

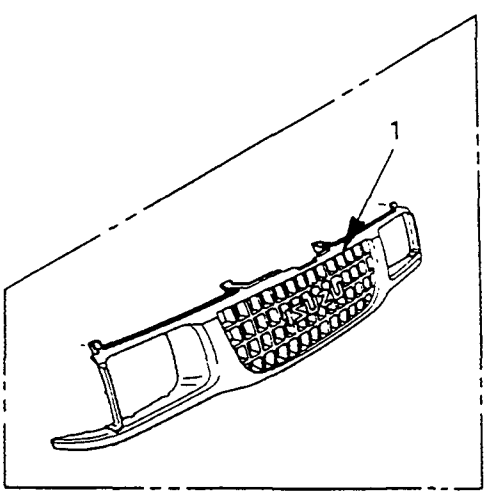

Removal Steps

1. Radiator grille
2. Dual pressure switch connector
3. Refrigerant line
4. Bracket bolt
5. Receiver dehydrator

Installation Steps

To install, follow the removal procedure in reverse order.

COMPRESSOR

REMOVAL AND INSTALLATION

Petrol Engines

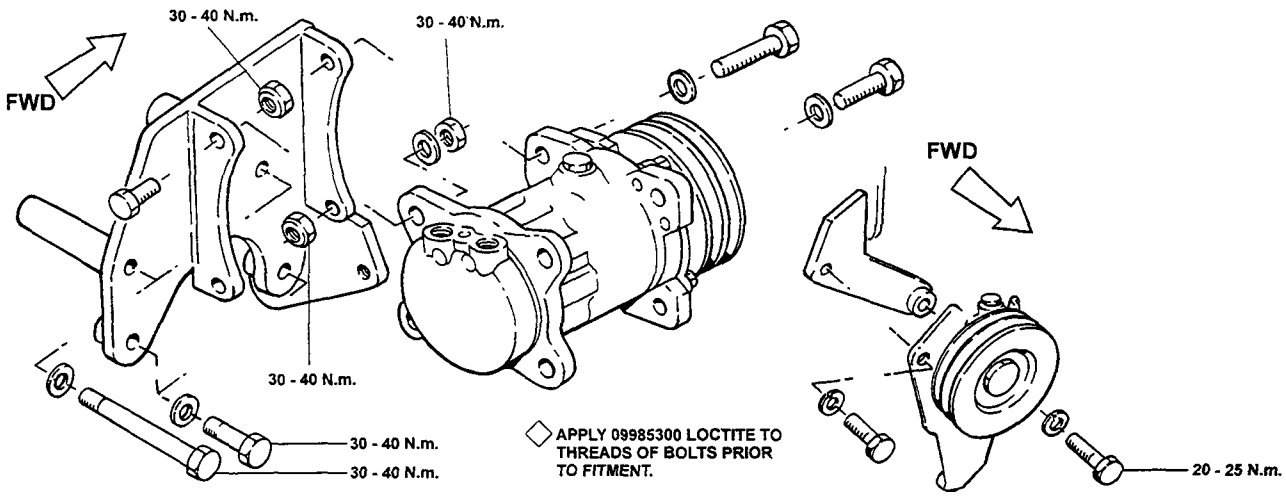

Diesel Engines

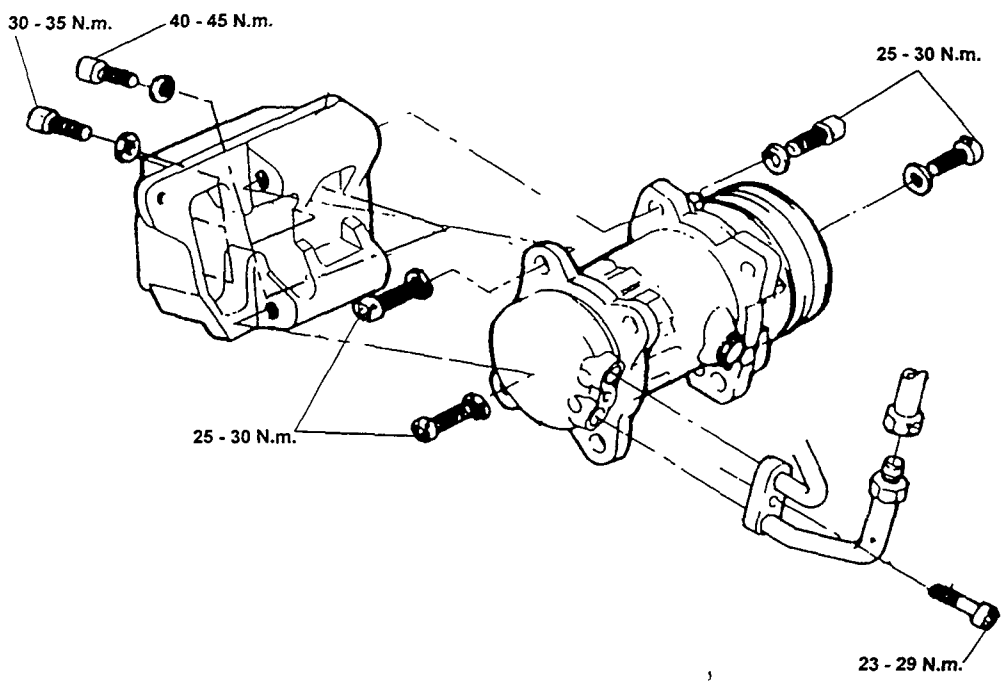

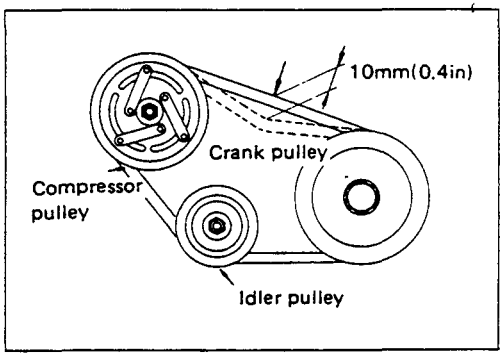

Petrol Engine

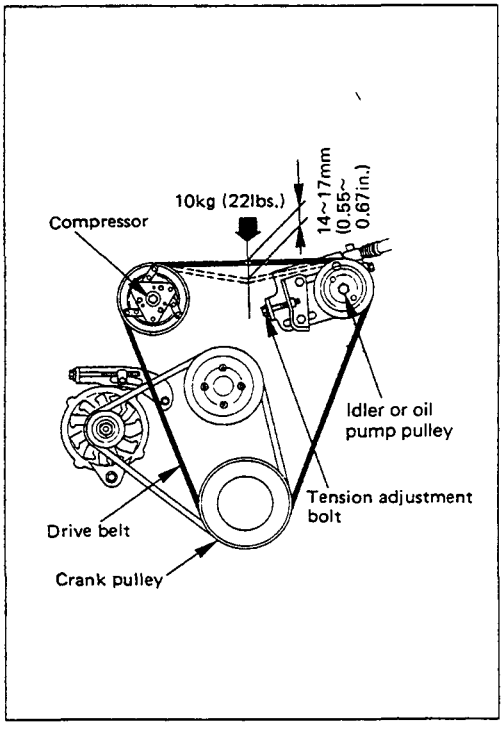

Diesel Engine

3. Compressor Belt

Check the drive belt tension.

Depress the drive belt mid-portion with a 10 kg (22 lb/98 N) force.

Petrol Engine

Standard deflection mm(in.)	10 (0.4)

4J Engine

Standard deflection mm(in.)	14 - 17 (0.55 - 0.67)

GENERAL REPAIR PROCEDURE

Oil Specification:

- The R-134a system requires a synthetic (PAG) compressor oil whereas the R-12 system requires mineral compressor oil. The two oils must never be mixed.
- Compressor (PAG) oil varies according to compressor model. Be sure to use oil specified for the model of compressor.

Specified Compressor Oil
RL 100S

Contamination of Compressor Oil:
Unlike engine oil, no cleaning agent is added to the compressor oil. Even if the compressor runs for a long period of time (approximately 1 season), the oil never becomes contaminated as long is there is nothing wrong with the compressor or its method of use.

Inspect the extracted oil for any of the following conditions:

* The capacity of the oil has increased.
* The oil has changed colour to red.
* Foreign substances, metal powder, etc., are present in the oil.

If any of these conditions exist, compressor oil is contaminated. Whenever contaminated compressor oil is discovered, the receiver/drier must be replaced.

Handling of Oil:

- The oil should be free of moisture, dust, metal powder, etc.
- Do not mix with other oil.
- The water content in the oil increases when exposed to the air. After use, seal oil from air immediately. (R-134a PAG Compressor Oil absorbs moisture much easier than R-12)
- The compressor oil must be stored in steel containers, not in plastic containers.

Compressor Oil Check:

The Oil used to lubricate the compressor is circulating with the refrigerant.

Whenever replacing any component of the system or a large amount of gas leakage occurs, add oil to maintain the original amount of oil.

Oil capacity
Sanden SD 7H13 135cc (± 15cc)

Oil Return Operation:

There is a close affinity between the oil and the refrigerant. During normal operation, part of the oil recirculates with the refrigerant in the system. When checking the amount of oil in the system, or replacing any component of the system, the compressor must be run in advance for oil return operation. The procedure is as follows:

1. Open the doors and engine hood.
2. Start the engine and A/C switch is "ON" and set the fan control knob at its highest position.
3. Run the compressor for more than 20 minutes between 800 and 1,000 rpm in order to operate the system.
4. Stop the engine.

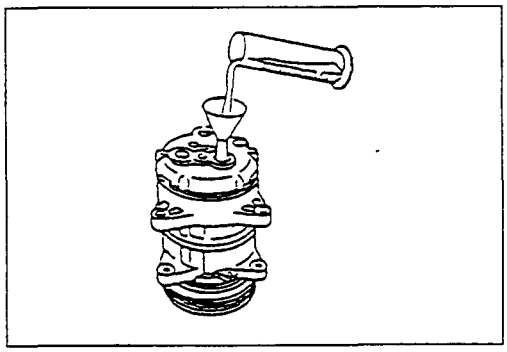

Replacement of Component Parts:
When replacing system component parts, supply the following amount of oil to the component parts to be installed.

Component parts to be installed	Amount of oil
Evaporator	50 cc
Condenser	30 cc
Receiver/drier	30 cc
Refrigerant line (One piece)	10 cc

Refrigeration oil must be replenished if more than two parts are removed at the same time. After installing these components, check compressor oil.

COMPRESSOR PARTS

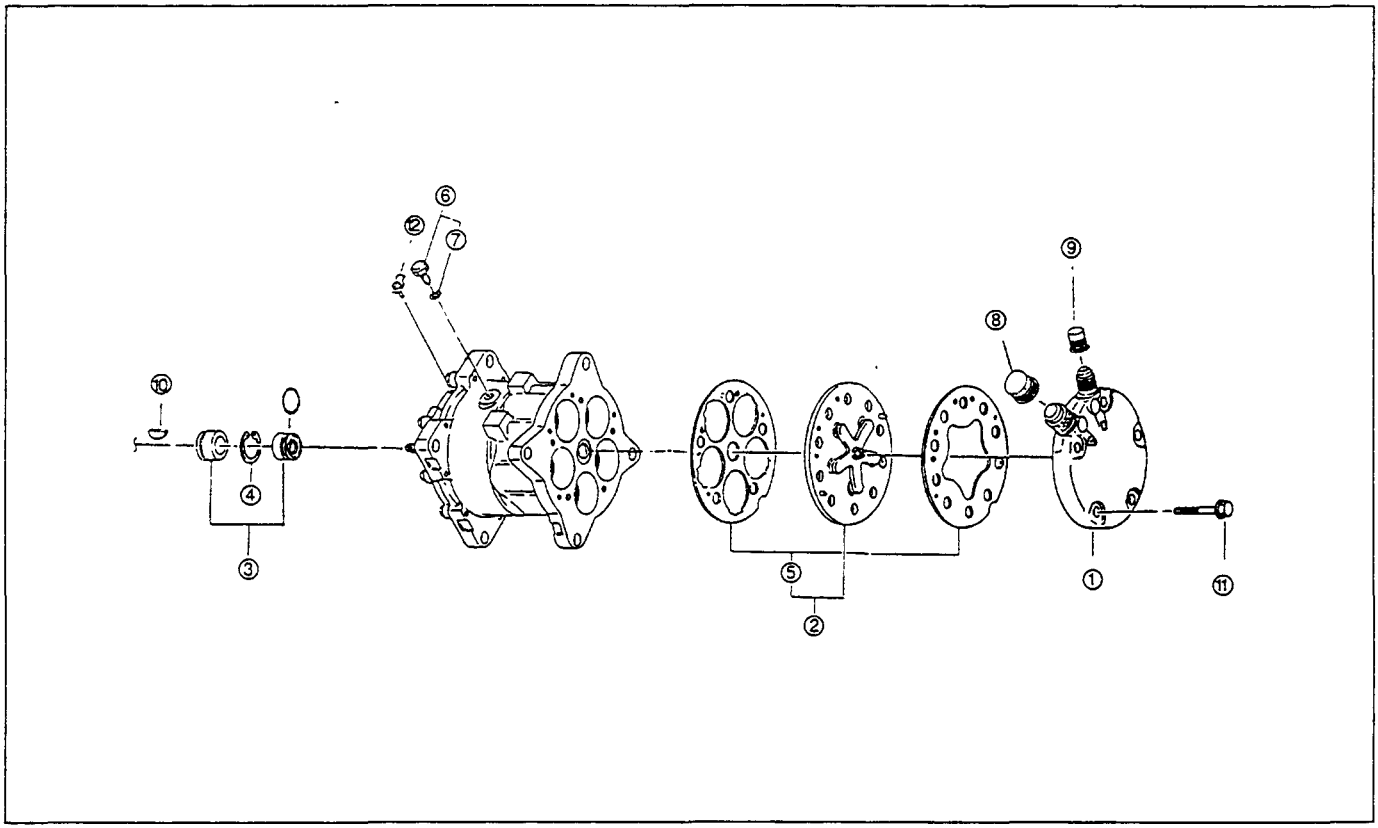

Description

1. Cylinder Head
2. Valve Plate Assembly
3. Seal Kit with Felt Ring Assembly
4. Seal Snap Ring
5. Cylinder Block and Head Gasket
6. Oil Plug with "O" Ring
7. Sealing "O" Ring
8. Suction Port Cap
9. Discharge Port Cap
10. Shaft Key
11. Cylinder Head Bolt
12. Lead Wire Screw Clamp

CLUTCH PARTS

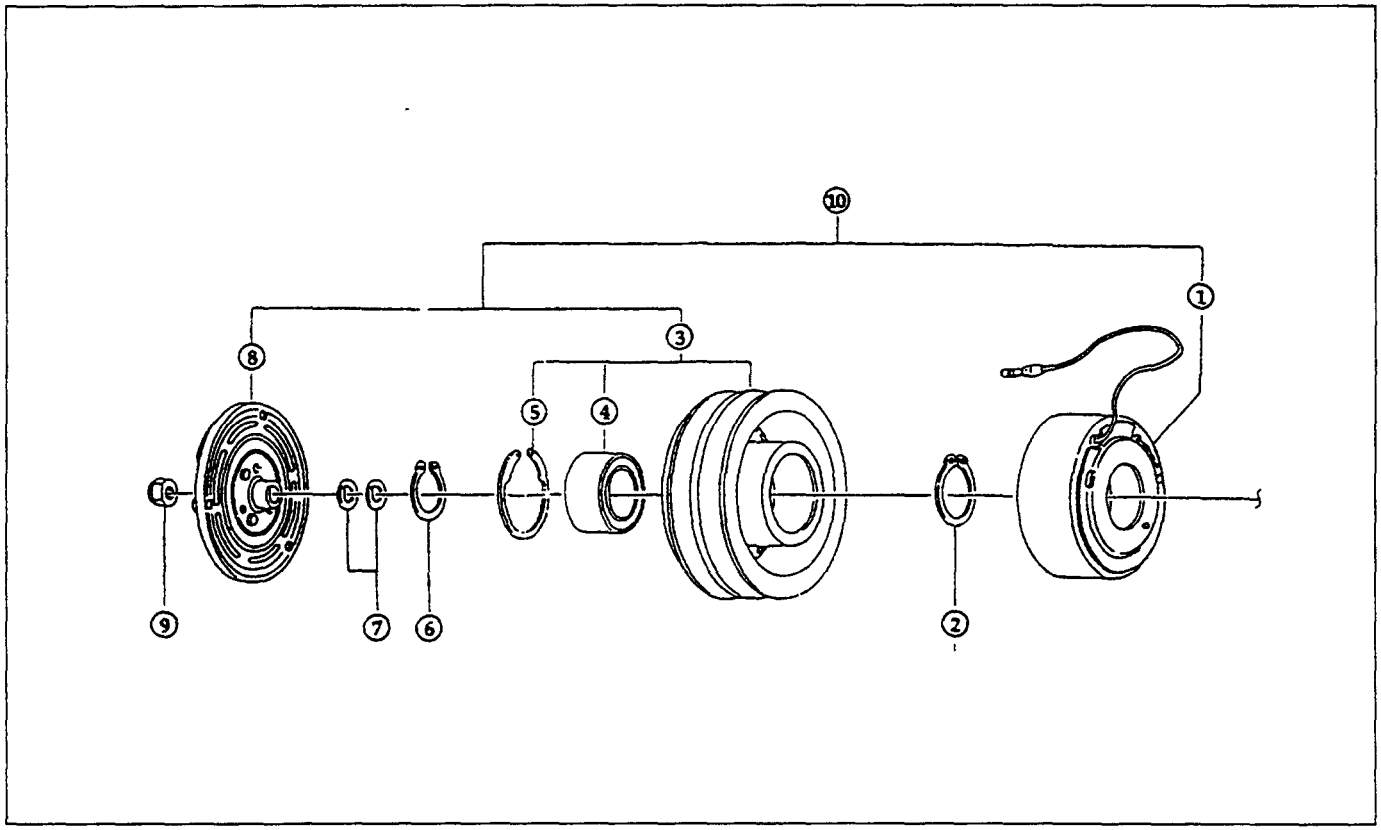

Description

1. Core Assembly
2. Core Snap Ring
3. Rotor Assembly
4. Clutch Bearing
5. Rotor Snap Ring
6. Front Housing Hub Snap Ring
7. Shims
8. Armature Assembly
9. U-nut
10. Clutch Assembly

Torque Specifications	Do not exceed upper limits
Item	**N.m**
U-nut	15-21
Oil filler Plug	13-15
Cylinder Head Bolt	33-35
Discharge Hose 3/4	25-29
- 16 UNF inch Flare Nut	
Suction Hose 7/8	34-44
- 14 UNF inch Flare Nut	
Drive Belt (New)	135
Drive Belt (Run-in)	108-123
Clutch Wire Clamp Screw	2-2.4

COMPRESSOR IDENTIFICATION

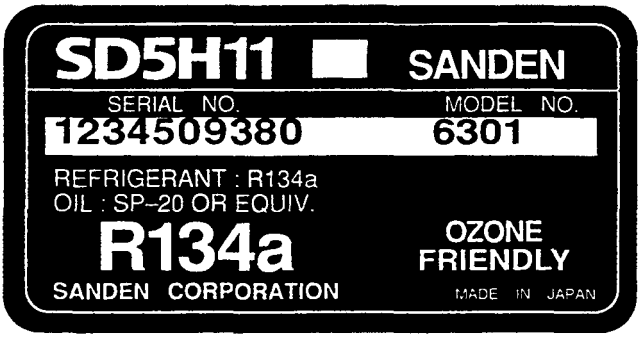

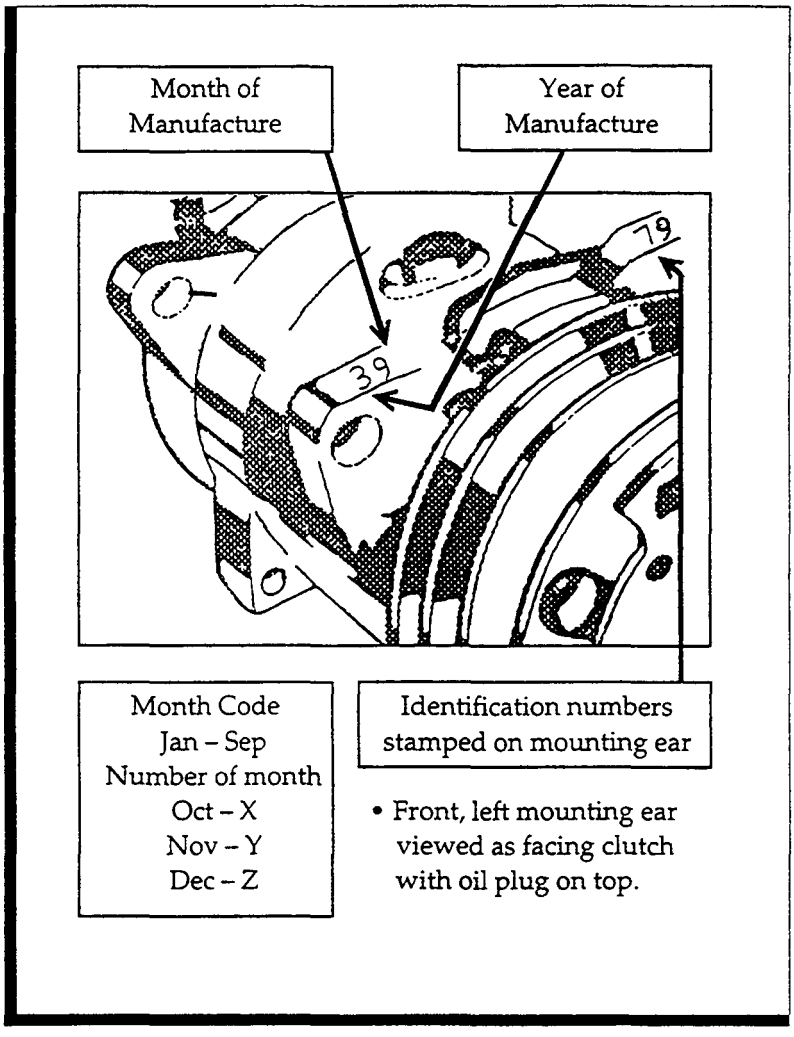

SERVICE PROCEDURES

TROUBLE SHOOTING CHART

This chart refers specifically to the SANDEN compressor. During diagnosis follow the inspection procedures in the sequence shown until a defect is found. Then perform the repair in the Cause and Remedy Section. If this repair does not fully solve the problem, proceed to the next inspection step.

	Symptom	Problem Diagnosis & Inspection		Cause and Remedy
LACK OF COOLING	• Abnormal high suction pressure with abnormal low discharge pressure	1. Valve plate assembly test	11	REPLACE OR REPAIR • Broken head or block gasket • Broken or deformed reed valve • Foreign substance under Reed valve or gasket
SMOOTH RUNNING COMPRESSOR	• Abnormal low suction and discharge pressure	1 Check for low refrigerant charge		
		2. Leak check compressor	10	REPLACE OR REPAIR • Lip seal leak • Cylinder head leak • Gasket leak • Oil plug leak • Cracked cylinder block • Front housing "O"-ring leak
		3. Leak check and diagnose system		
ROUGH RUNNING OR INTERMITTENT OR INOPERATIVE	• Intermittent or inoperative	1. Check belt tension	13	
		2. Check clutch air gap		ADJUST AIR GAP
		3. Check clutch volts, amps, coil lead wire	10	REPLACE OR REPAIR • Broken lead wire • Clutch coil defect - internal System ground
	• Rough running	4. Shaft turning smoothness test		• Compressor failure - internal
UNUSUAL NOISE	• Clutch engaged	1. Check compressor mounting components	11	
		2. Check engine components		
		3 Check for intermittent or slipping clutch		• Adjust air gap - defective coil
		4. Check for proper refrigerant charge		• Recharge and re-check
		5 Check clutch bearing	11	• Replace bearing
		6. Shaft turning smoothness test	10	• Compressor failure - internal
		7. Remove valve plate assembly and inspect	16	REPLACE OR REPAIR • Broken discharge valve reed or retainer • Broken suction valve reed • Broken gasket
	• Clutch disengaged 'chattering'	1 Check air gap	13	REPLACE OR REPAIR • Adjust air gap • Defective clutch pulley or front plate

INSPECTION PROCEDURES

Listed below are the various inspection procedures which are very useful for easy systematic tracing of faults.

LEAK CHECK

Visual:
Seeping of oil does not necessarily indicate leakage of refrigerant. You can look at the following problems:-

Repairable:
- Oil at lip seal area (feel at seal cavity).
- Oil around cylinder head (feel at gasket, fittings).
- Oil around oil plug (oil plug "O"-ring is damaged).

Non Repairable:
- Oil at cracks in cylinder block, front housing.
- Oil around oil plug (where cylinder block thread is damaged).

GENERAL

Always clean away all oil, grease and dirt, etc. and blow away residual refrigerant before commencing any inspection.

There are many ways of detecting leakage.

The most commonly use is the "Soap Bubble" method. Pressurise the compressor and apply soap solution on all parts of the compressor - any bubble evolves out indicates a leak.

Shaft Turning Smoothness Test
Brand New Compressor:
1. Place the compressor with the oil plug facing upwards.
2. Uncap suction and discharge port cover cap.
3. With a 14 mm socket and a torque wrench (10-150 kg cm), rotate the compressor shaft nut. If severe resistance or 'catches' are felt during rotation, replace the compressor.
4. Compressor is ready for installation into vehicle.

Installed Compressor:

1. Release gas.

2. Disconnect the suction and discharge hoses.

3. Disengage the clutch.

4. Rotate compressor shaft with a 14 mm socket and a torque wrench on the shaft nut.

5. If severe resistance or 'catches' are felt during rotation, replace the compressor.

CLUTCH TEST

1. Replace the core assembly if the coil wire is broken (see Clutch Service Section).

2. Check on amperage and voltage, the current range is from 3.2A to 4.2A at 12V.

   (i) A very high current reading indicates a short circuit within the core wire.

   (ii) No current reading indicates an open circuit.

   (iii) An intermittent or poor system ground will result in a lower voltage at clutch (check for proper sitting of core snap ring or loosen lead wire clamp screw).

   (iv) Replace the core assembly if there is open or short circuit.

3. Check on air gap (0.4 mm - 0.8 mm) with a feeler gauge. Incorrect air gap may result in malfunction during engagement and disengagement on clutch (see Clutch Service Section).

4. If there is suspected bearing noise, remove belt and disengage clutch, listen for bearing noise by rotating rotor assembly with hand. The rotor assembly must be replaced if there is excessive noise.

UNUSUAL NOISE

Compressor Mounting Components:
Check for:-

- Loose belt
  (Torque up to specifications).

- Broken bracket and/or compressor mounting ear.
  (Replace broken components).

- Missing, broken or loose bolts at compressor and engine fixing points.

- Flush fit at all points.
  (Replace any bracket component not fitting properly. Torque bolts to engine using manufacturer's specifications).

- Loose or wobbling crankshaft pulley, incorrect centre bolt torque or centre bolt 'bottoming'.
  (repair to manufacturer's specifications).

- Rough idle pulley bearing.
  (Replace if necessary).

Engine Components Noise:
Check for noise in:-

- Alternator bearing.

- Air pump (if any).

- Water pump bearing.

- Engine valves.

- Timing mechanism.

- Loose engine mounting bolts.

Regrigerant Charge:
A 0 - 35 bar or lower suction pressure due to a low refrigerant charge can cause unusual noise (Restore refrigerant to proper level).

Re-test by applying heat to evaporator for higher suction pressure.

Clutch Bearing:
(see Clutch Test)

Valve Noise:
Check for a broken or distorted reed valve or broken gasket.

VALVE PLATE ASSEMBLY TEST

Valve plate assembly failures (suction or discharge valve or gasket) may be determined with the compressor installed on the car.

Discharge or Suction Valve Breakage:
- when compressor is operated at idle speed, compressor makes a 'clacking' sound.

Head Gasket Breakage:
- at idle speed, discharge pressure does not increase to normal condition and suction pressure is high.

Checking the discharge valve and head gasket by pressure balancing test:-

- Connect manifold gauge set to suction and discharge ports.
- Run compressor for five minutes at idling speed and stop.
- Measure elapsed time for discharge and suction pressure to equalise. If less than two minutes, discharge valve or head gasket is broken.

REPAIR PROCEDURES

CLUTCH SERVICE

The clutches for all models include a visible counterweight on the front plate to improve dynamic balance.

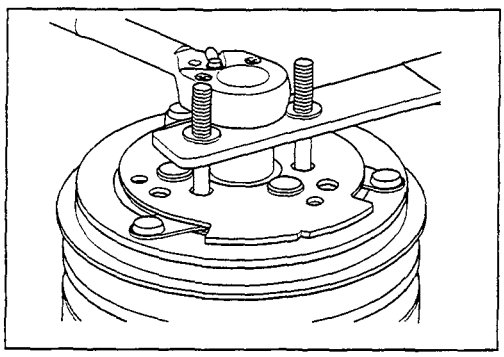

Steps for Clutch Removal:

1. Place the three pins front plate holder into the holes of the front plate and remove the U-nut with a 14 mm socket. The U-nut cannot be re-used.

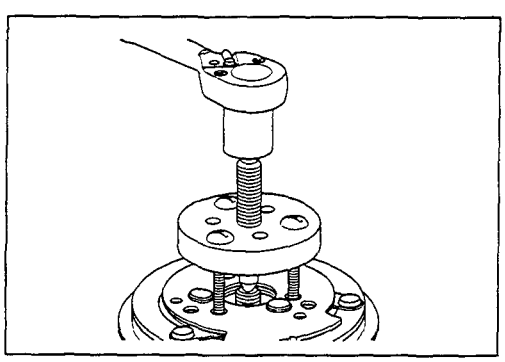

2. Remove the armature assembly by using the armature extractor. Fix the bolts into the threaded holes and while holding the extractor plate still, rotate the handle clockwise until the armature assembly is taken out.

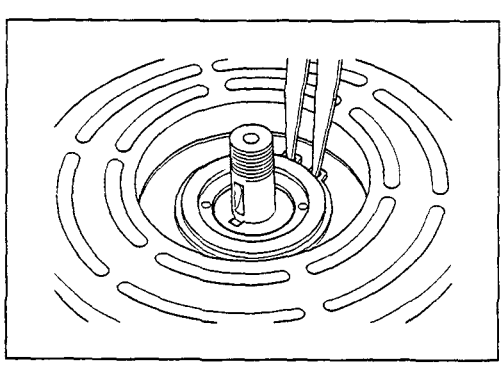

3. Remove the front housing hub snap ring with an external snap ring plier.

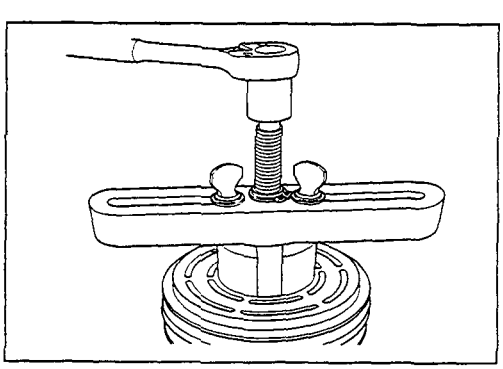

4. Insert the lip of the rotor extractor into the rotor snap ring groove and tighten the 2 wing nuts. Turn the centre bolt until the rotor assembly is free.

5. Loosen the lead wire clamp screw with a cross screw driver and with an external plier, remove the core snap ring and take out the core assembly.

Steps for Clutch Installation:

Clutch installation procedure is the reverse of clutch removal.

1. Install core assembly. Insert core assembly onto front housing hub with the core protrusion sitting corresponding into the hole of the front housing. With an external plier, fix back the core snap ring.
2. Tighten lead wire clamp screw to the specification given.

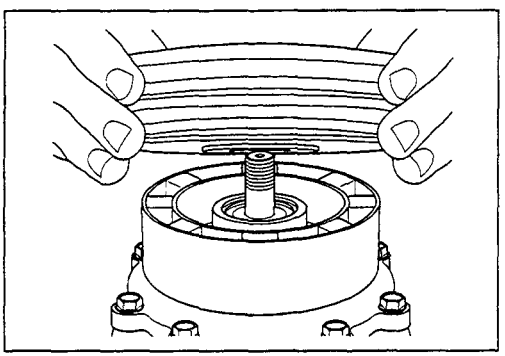

3. Install rotor assembly. Fix rotor assembly back with a rotor installer by using a press.
   Another alternative is to use a hammer and tap lightly on the rotor installer until the rotor assembly sits into the front housing hub. Listen for a distinct change of sound when the rotor rests fully onto the hub.
4. Re-install the front housing hub snap ring (flat side facing down) with an external snap ring plier.
5. Install armature assembly. With an armature press-in jig and ensuring the front plate keyway is aligned with the compressor shaft key, fix in the armature assembly by a hammer or with a hand press.
6. With a new U-nut, torque up according to specification by using a front plate holder and a torque wrench with a 14 mm socket.

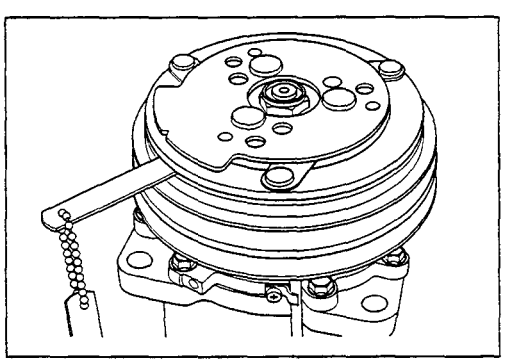

7. Check for air cap. With a feeler gauge of 0.4 mm and 0.8 mm, insert gauge into gap. Feeler gauge of 0.4 mm must be able to be inserted into the whole circumference whereas feeler gauge of 0.8 mm must not be inserted at any point. If gap is too big, lightly tap with a mallet on the front plate at the high spots. If gap is too small, use a flat screw to raise up the front plate of the low spots.

NB:
The air gap is determined by the spacer shims. When installing the clutch assembly, try the original shims first. If the air gap does not meet the specifications in Step 7, add or subtract shims (from accessory pack) by repeating Step 5 & 6.

LIP SEAL SERVICE

Step for Lip Seal Removal:

1. Repeat Step 1 – 5 in Clutch Removal Section.
2. Remove the shims by hand.
3. Remove shaft key by lightly tapping it loose with a flat screw driver and hammer.

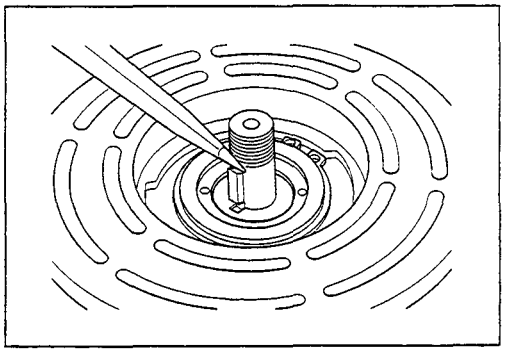

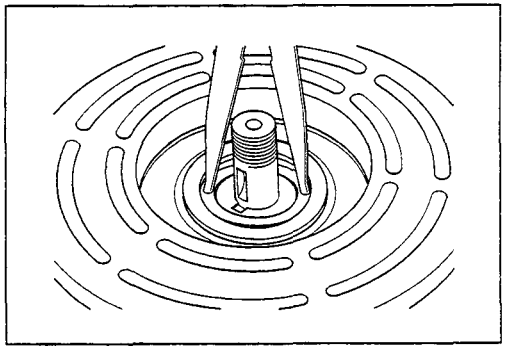

4. Removal of felt ring assembly. Lift up the felt ring assembly with an external snap ring plier.

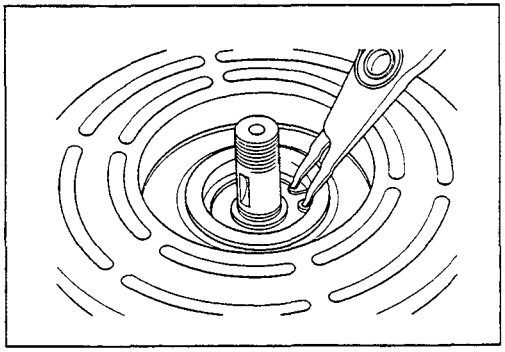

5. Remove seal snap ring with an internal snap ring plier.

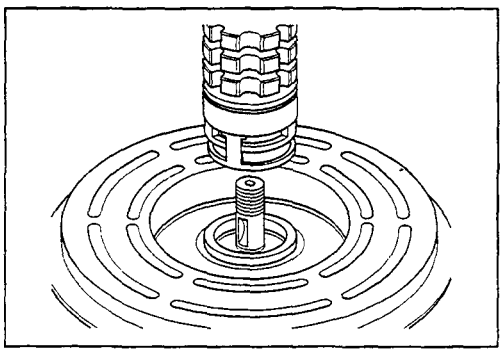

6. Remove lip seal with a seal extractor.

Steps for Lip Seal Installation:

1. Clean the sealing cavity thoroughly with an air gun.
2. Coat new lip seal with refrigerant oil. Never re-use the lip seal after removal.
3. Insert seal protector onto compressor shaft.

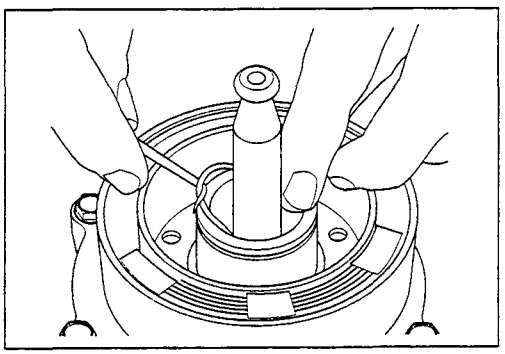

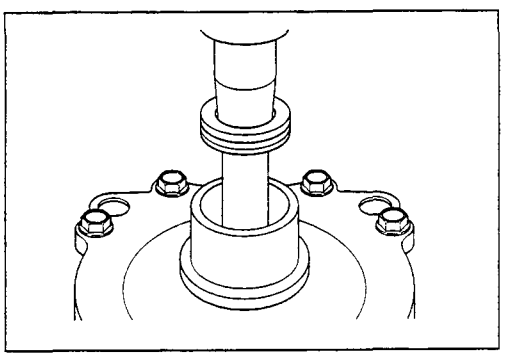

4. With the lip seal attached to the lip seal installer, place the seal installer over the seal protector.
   Press in gradually until you can feel that the lip seal sits onto the base firmly.

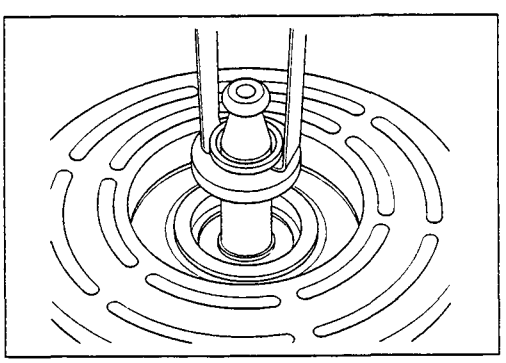

5. With an internal snap ring plier, install the seal ring with the flat side facing downwards. Press in the snap ring with the snap ring installer. Another alternative is to lightly tap it with a flat screw driver.

6. Fix in the new felt ring assembly with the felt ring installer.

7. Install the shaft key with a flat plier. Ensure that it sits properly inside the shaft keyway. Install the shims onto the shaft. Reassemble the clutch onto compressor following the procedures in “Steps for Clutch Installation”.

CYLINDER HEAD SERVICE

Steps for Cylinder Head and Valve Plate Assembly Removal:

1. Visually inspect the cylinder head for fitting or thread damage.
2. Remove the 5 cylinder head bolts with a 13 mm socket.
3. With a hammer and scraper, tap on the joint between cylinder head and valve plate assembly at the outer edge to remove the cylinder head.

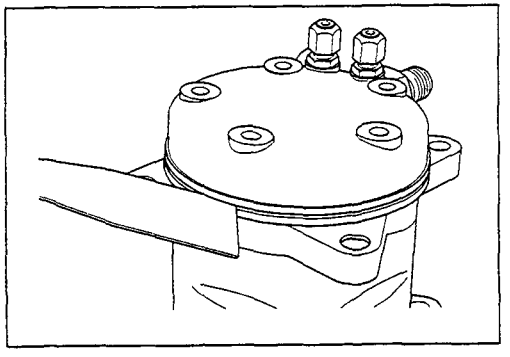

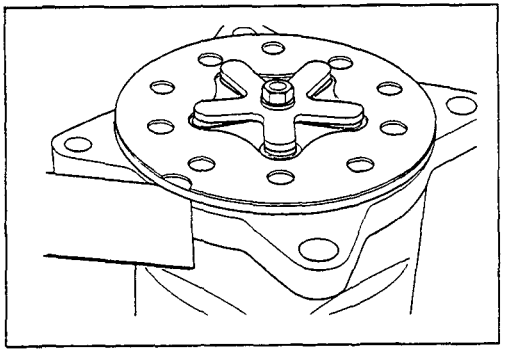

4. Tap on the joint between valve plate assembly and cylinder block to remove valve plate assembly.

Steps for Installation of Cylinder Head and Valve Plate Assembly:

1. Install new/old valve plate assembly and cylinder block. Never re-use the old gaskets.

   The 2 locating pins on valve plate ensure a foolproof installation.

2. Install cylinder head and hand tighten bolts.

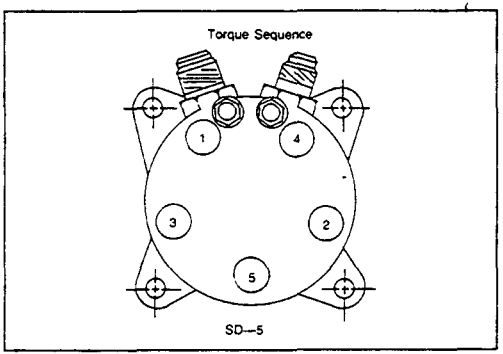

3. Torque up to the specification using the “star” configuration.

GENERAL INFORMATION

REPLACING COMPRESSOR

When replacing the old compressor with a new one, follow this procedure closely:-

1. Drain oil from old compressor and measure the amount.

2. Drain oil from new compressor and refill in the correct amount to that of the old compressor. Never expose the oil to the atmosphere for too long.

In order to achieve high performance of compressor, sufficient amount of refrigerant oil is necessary. Excessive oil decrease cooling efficiency.

INSTALLATION TIPS

Trouble-free operation of SANDEN compressor depends on the below factors:-

1. Correct pulley alignment and belt size.

2. Correct torque of the drive belt.

3. Correct torque of all securing bolts and nuts.

4. Accurate and firm fitting of the compressor mounting bracket to compressor mounting and engine.

5. Sufficient refrigerant.

6. Never operate the compressor with insufficient refrigerant oil at a high speed or prolonged period.

SPECIAL APPLICATIONS

For discharge refrigerant hose which extends 4.5 m in length, an additional oil amount of 30 cc is to be added for every additional 2.0 m of hose length.

HEATER UNIT, BLOWER UNIT AND EVAPORATOR ASSEMBLY

REMOVAL AND INSTALLATION

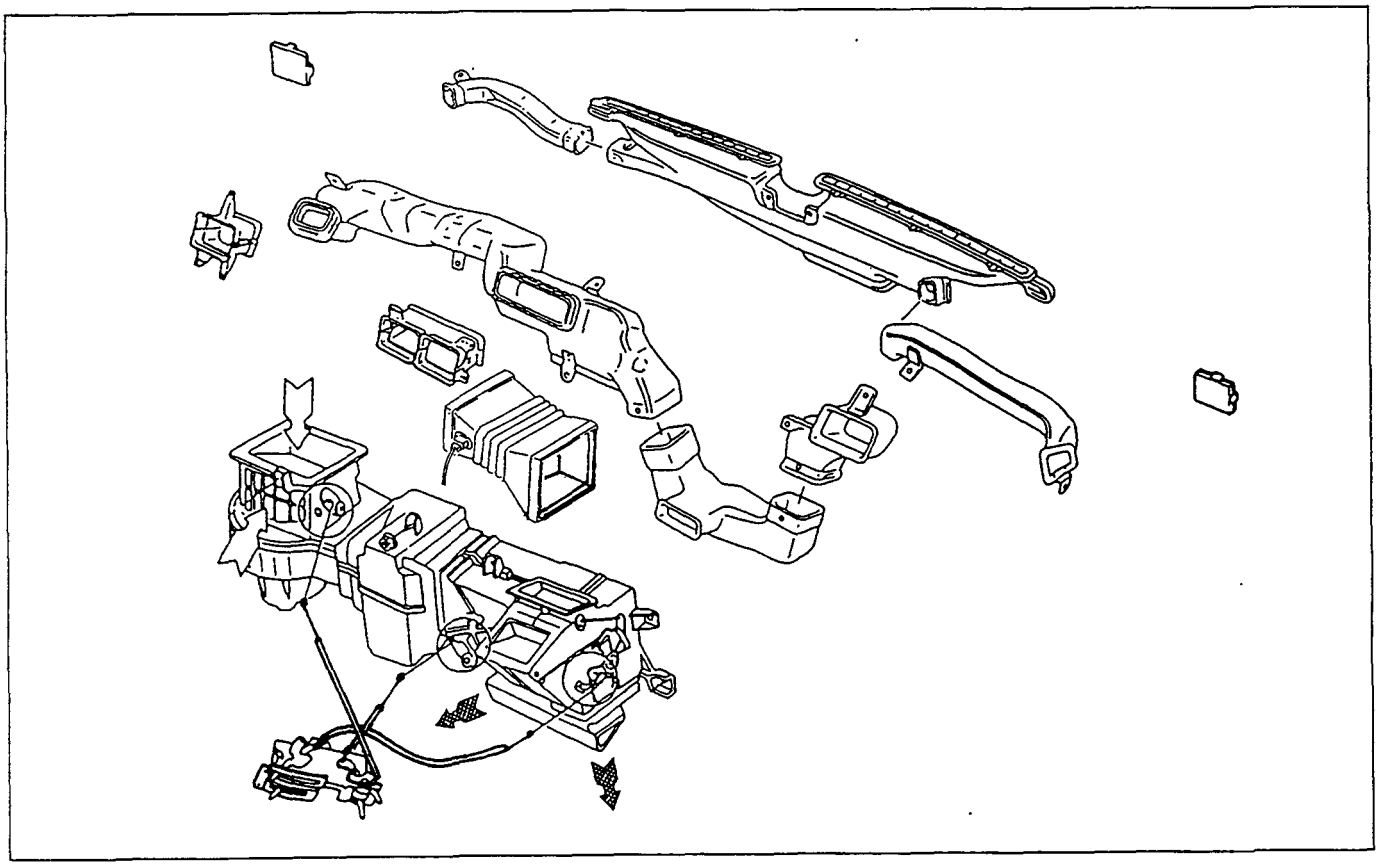

Removal Steps

* Before evaporator assembly and heater unit removal, refer to section 2D "BODY" for instrument panel removal procedure.

▲ 1. Flare nut, evaporator to compressor and receiver tank
▲ 2. Connectors
3. 3 nuts, evaporator
4. Evaporator assembly (if so equipped)
4a. Duct, blower unit to heater unit (without evaporator model)
▲ 5. Hose, heater
▲ 6. Hose, heater
7. Duct, side ventilator
8. 4 nuts, heater unit
9. Heater unit assembly
10. Nuts and bolts, blower unit
▲ 11. Blower unit assembly

Installation Steps

To install, follow the removal procedure in reverse order.

▲ 11. Blower unit assembly
10. Nuts and bolts, blower unit
▲ 9. Heater unit assembly
8. 4 nuts, heater unit
7. Duct, side ventilator
▲ 6. Hose, heater
▲ 5. Hose, heater
4a. Duct, blower unit to heater unit (without evaporator model)
4. Evaporator assembly (if so equipped)
3. 3 nut, evaporator
2. Connectors
▲ 1. Flare nut, evaporator to compressor and receiver tank

* After evaporator assembly and heater unit installation, refer to section 2D "BODY" for instrument panel installation procedure.

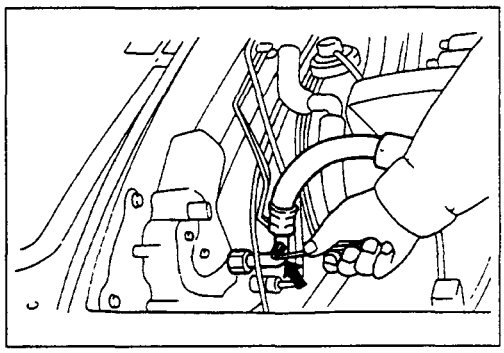

Important Operations - Removal

1. Flare Nut

Before unscrewing the flare nut, leak out the refrigerant gas by depressing the expansion valve with screwdriver.

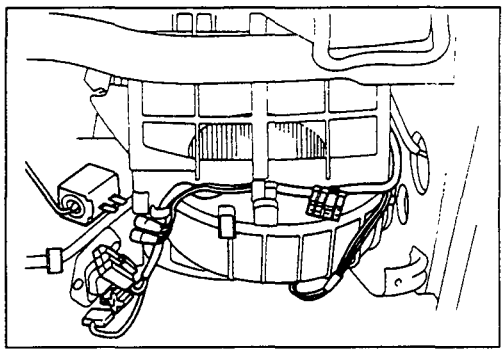

2. Connectors

Write down the harness connection positions before disconnecting.

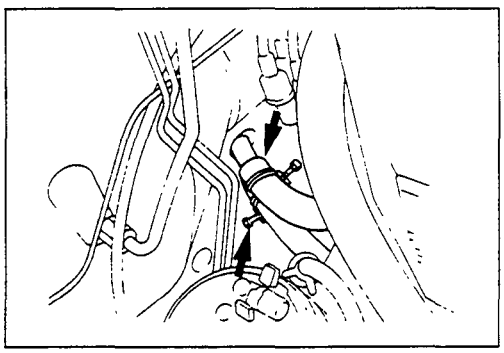

5. and 6. Hose, heater

Since the coolant water flows out from hoses, place a drain pan under the vehicle before disconnecting hoses.

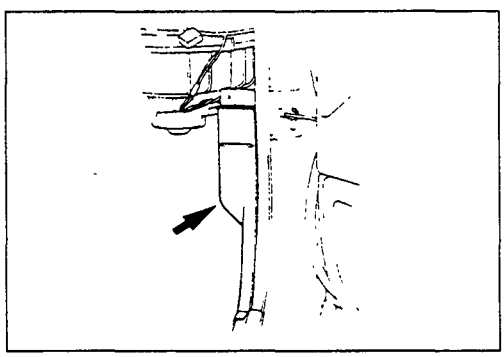

11. Blower unit assembly

Remove the cover of seat belt warning buzzer first.

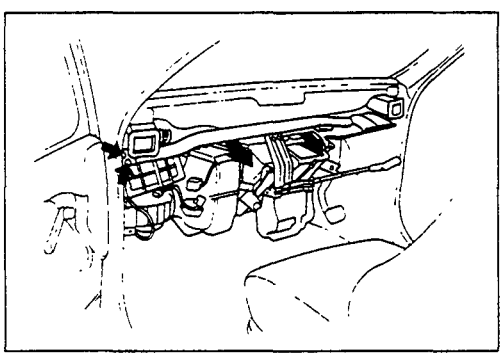

Unscrew the arrowed bolts and remove the blower unit with pulling the cross beam horizontally.

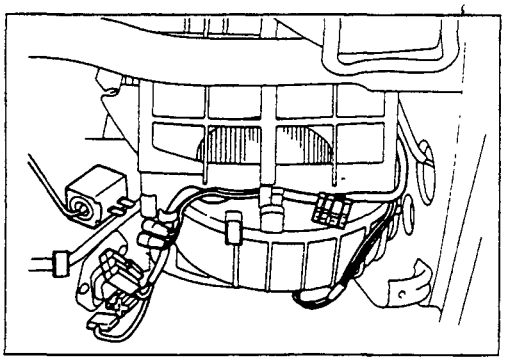

Important Operations - Installation

11. Blower unit assembly

Pull out the harness fully before installation of blower unit assembly.

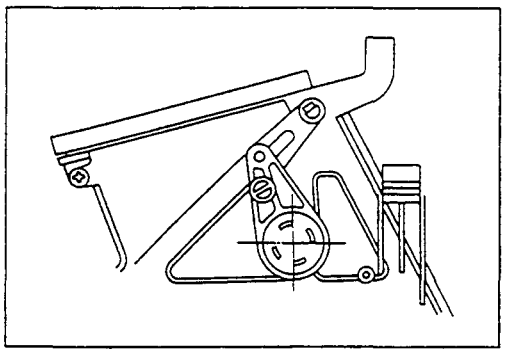

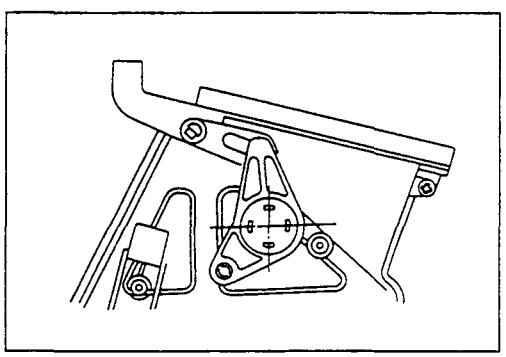

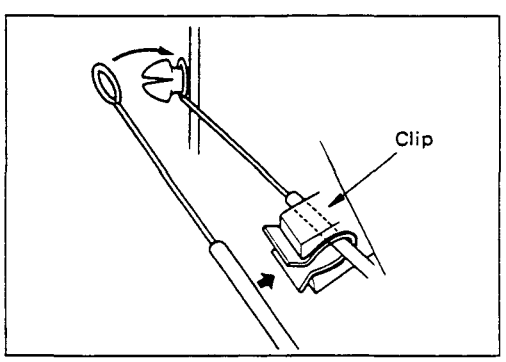

Connect the cable with the air-source select lever and blower assembly lever set in the CIRC position. Secure the outer tube with cable clip.

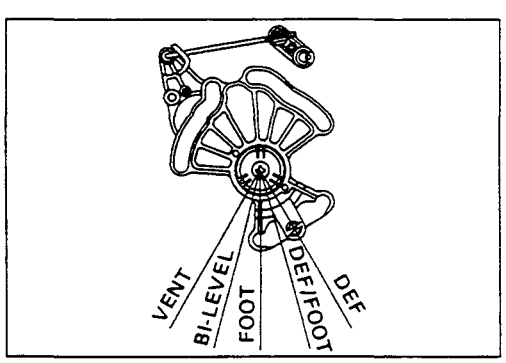

9. Heater unit assembly

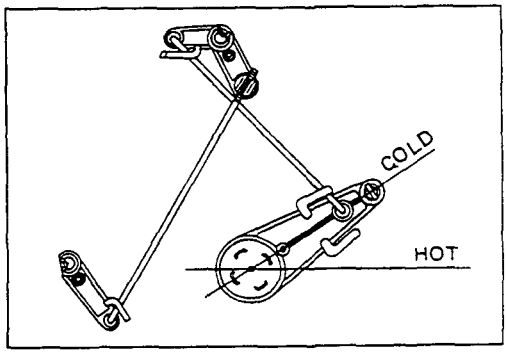

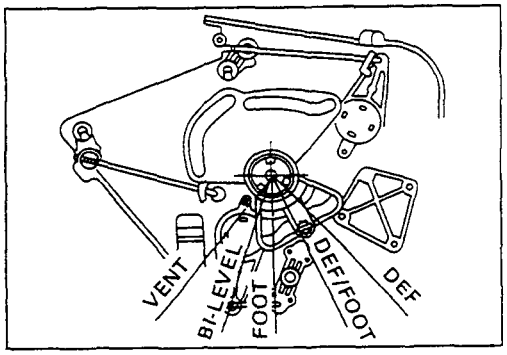

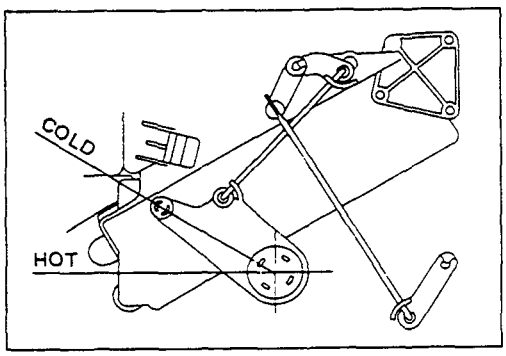

Mode and temp cable:

1. Attach the control assembly to the instrument panel using screws.
2. Connect the cable, with the mode selector lever and heater assembly lever set in the DEF position. Secure the outer tube with cable clip.
3. Connect the cable with the temperature lever and heater lever set in the COLD position, then fix the outer tube with a cable clip. Check all doors and the water valve. If the doors are not closing properly, remove the cable and adjust the cable length as required.

- Defroster door - the defroster door should be in the defroster position when the control lever is moved to the DEF and DEF/FOOT positions. Air is directed to the defroster outlets.
- Heat door - in the positions of FOOT, DEF/FOOT and BI-LEVEL air is directed out to the centre and side outlets. Air is not delivered in other positions. However, when the heater is in use, some air is directed to the defroster.
- Vent door - in the position of VENT (FACE) and BI-LEVEL, air is directed out to the centre and side outlets. Air is not delivered to any other position.
- Air mix door - when the temperature control lever is in the HOT position, hot air is delivered. In COLD position, non-heated air is delivered.

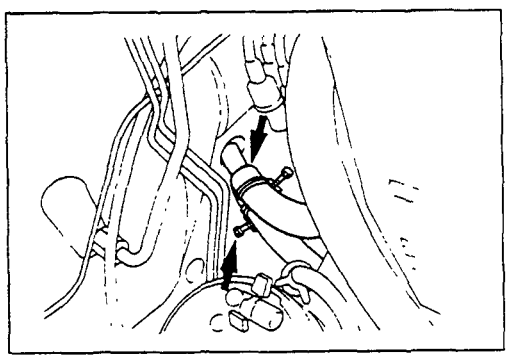

5. and 6. Hose, heater

After installation, replenishment of coolant water should be done to bring the coolant level of the radiator surge tank up to the "MAX" line.

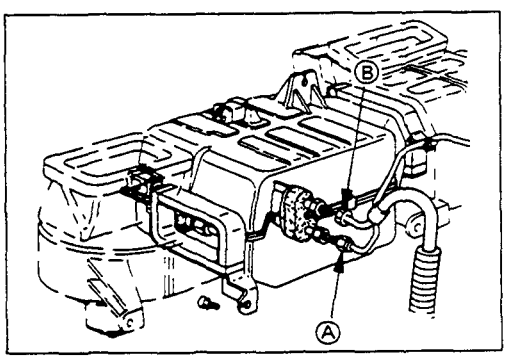

1. Flare nut, evaporator to compressor and receiver tank

	N•m
To compressor A	20 – 29
To receiver tank B	10 – 20

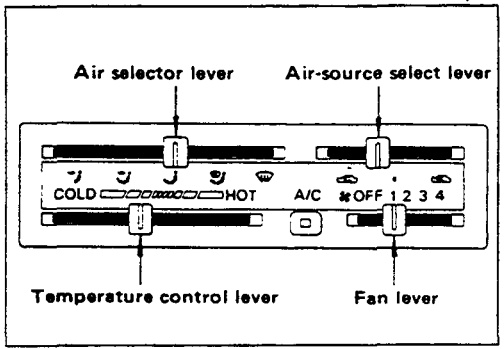

NOTE:

* FAN SWITCH (CONTROL LEVERS) OPERATING TIPS REFER TO "OWNER'S MANUAL".

DISASSEMBLY AND ASSEMBLY

HEATER UNIT

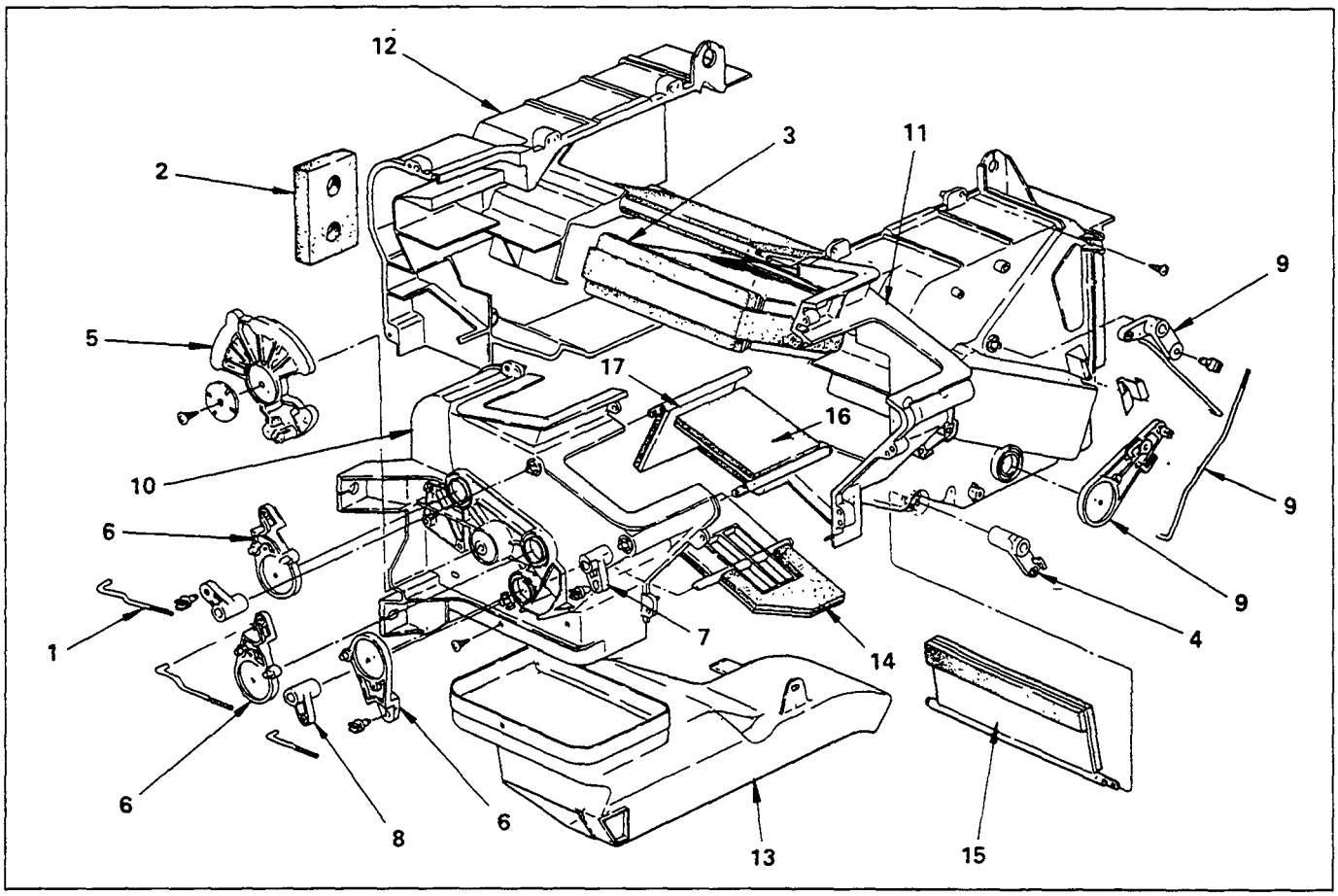

Disassembly Steps

1. Rod and lever, defroster door
2. Plate and seal
3. Core assembly
4. Lever, mix door
5. Link, main mode control
6. Relay link
7. Lever, vent door
8. Lever, heater door
9. Relay link mix door
10. Case, LH
11. Case, RH
12. Case, back
13. Duct
14. Door, heat foot
15. Door, heat mix
16. Door, side vent
17. Door, defroster

Reassemble Steps

To reassemble follow the disassembly procedure in reverse order.

EVAPORATOR UNIT

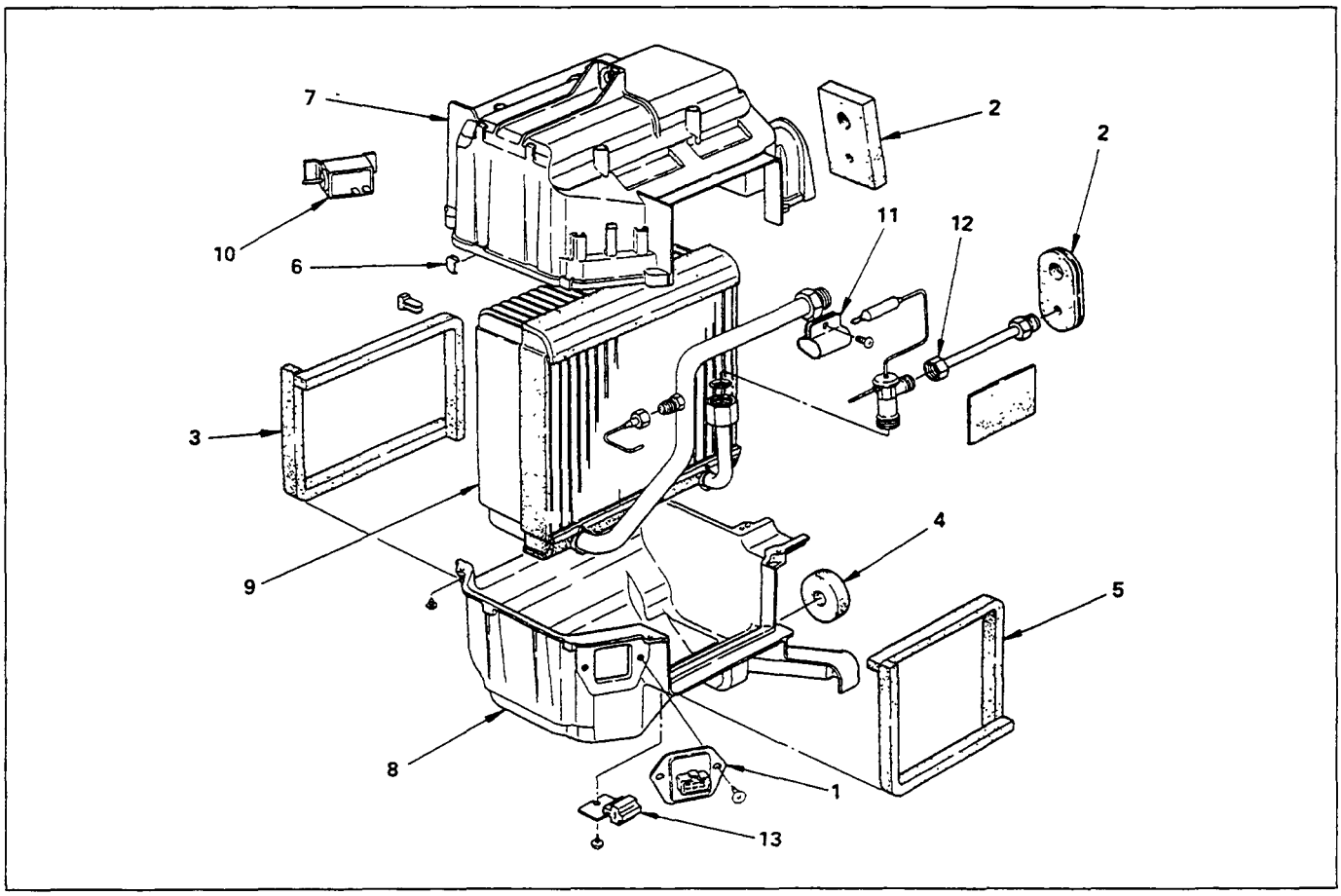

Disassembly Steps

1. Resistor; air-conditioning
2. Seal; vacuum
3. Seal
4. Seal
5. Seal
6. Attaching parts
7. Case; upper
8. Case; lower
9. Core assembly
10. Switch; thermostat
11. Clip; sensing tube
12. Expansion valve assembly
13. Diode

Reassemble Steps

To reassemble follow the disassembly procedure in reverse order.

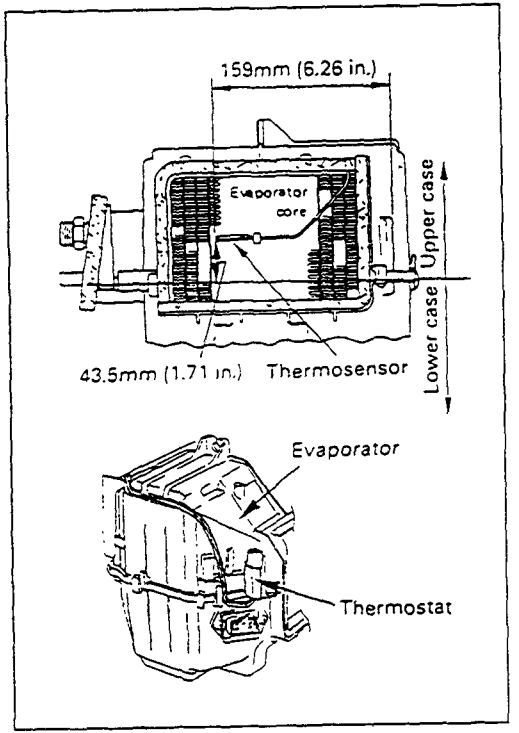

Important Operation – Reassembly

2. Thermostat (Clip type)

1. Install the thermostat to the evaporator core specified position with the clip.
2. Thermostat sensor must not interfere with the evaporator core.

BLOWER UNIT

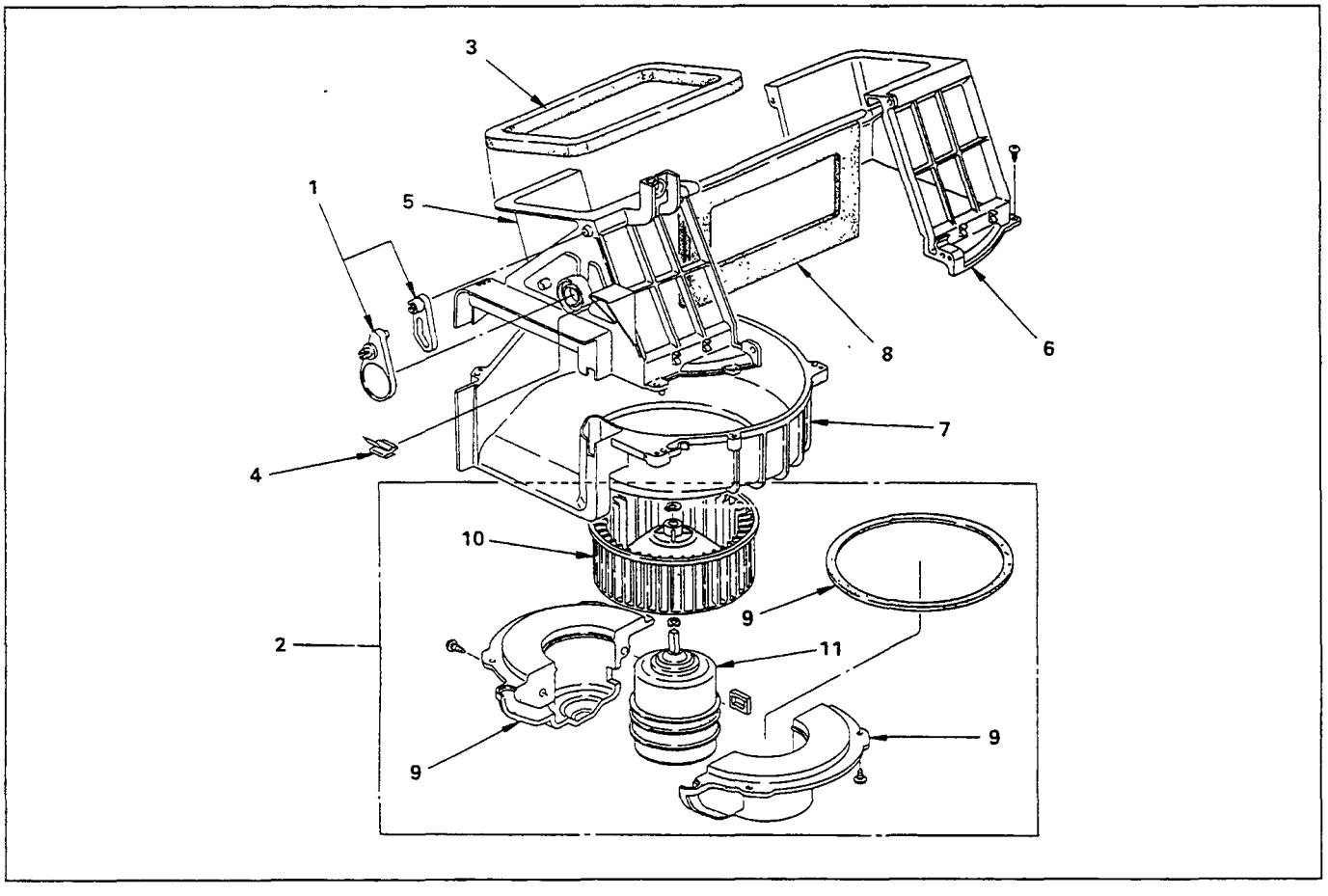

Disassembly Steps

1. Lever; door
2. Blower motor assembly
3. Seal
4. Attaching parts
5. Case; LH
6. Case; RH
7. Case; lower
8. Door; blower unit
9. Core; blower unit
10. Fan; blower motor
11. Blower motor

Reassemble Steps

To reassemble follow the disassembly procedure in reverse order.

CONTROL LEVER ASSEMBLY

REMOVAL AND INSTALLATION

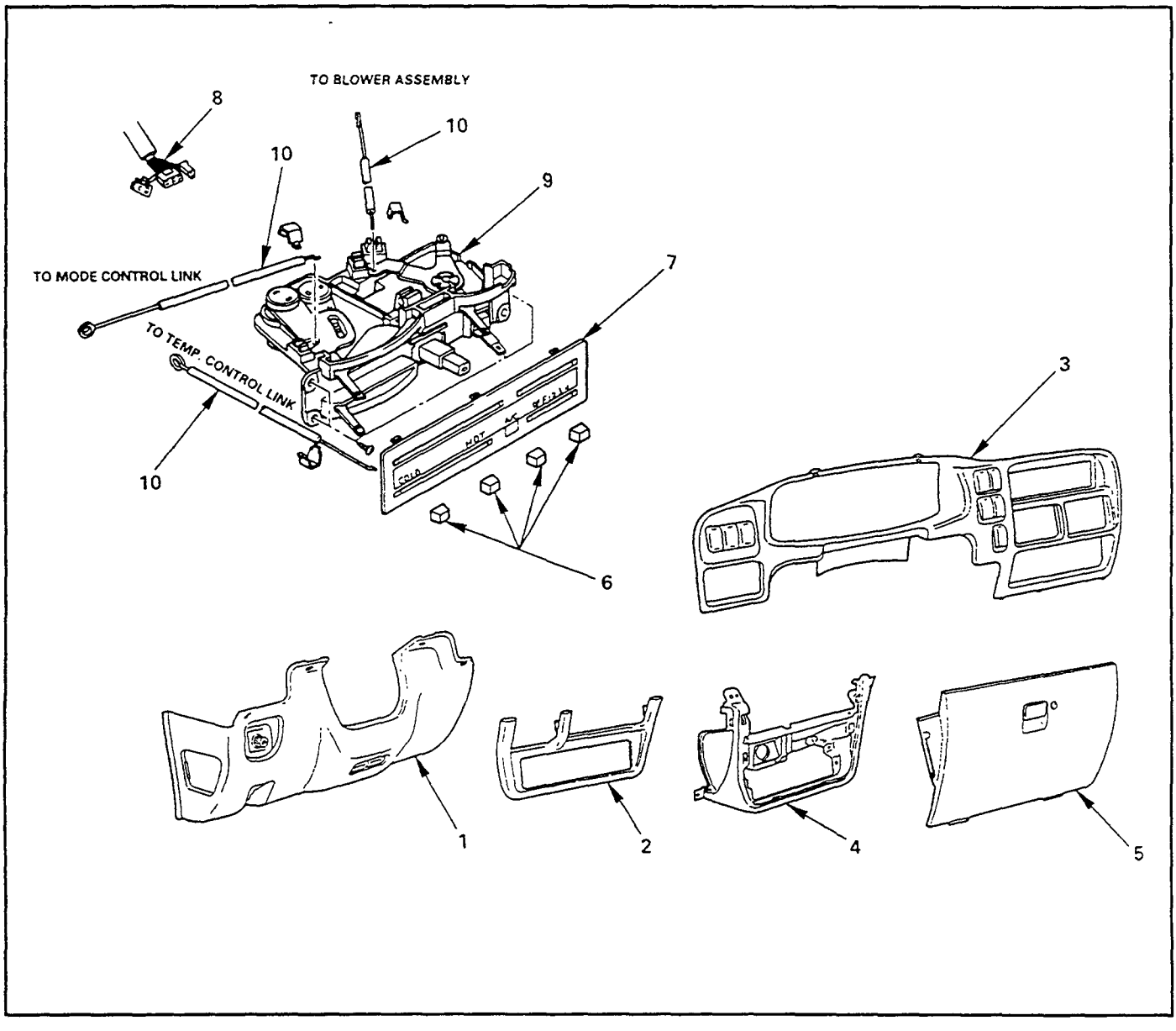

Removal Steps

1. Instrument panel driver lower cover assembly
2. Lower cluster assembly
3. Meter cluster assembly
4. Instrument panel lower center cover assembly
5. Glove box
6. Knobs
▲ 7. Heater bezel
▲ 8. Fan control lever and / or A/C switch connector
9. Control lever assembly
▲ 10. Cables

Installation Steps

10. Cables
9. Control lever assembly
8. Fan control lever and / or A/C switch connector
7. Heater bezel
▲ 6. Knobs
5. Glove box
4. Instrument panel lower center cover assembly
3. Meter cluster assembly
2. Lower cluster assembly
1. Instrument panel driver lower cover assembly

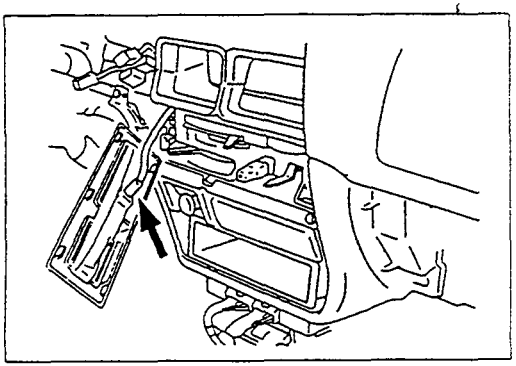

Important Operation—Removal

7. Heater Bezel

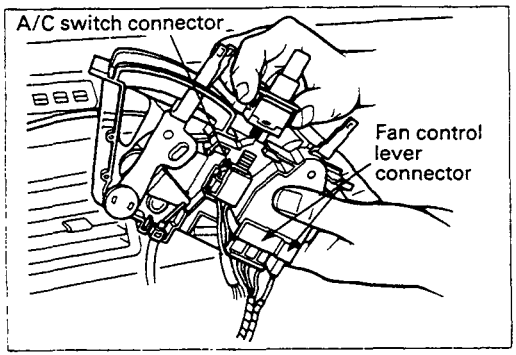

8. Fan and A/C Switch Connector

Pull the control lever assembly out and disconnect the connectors.

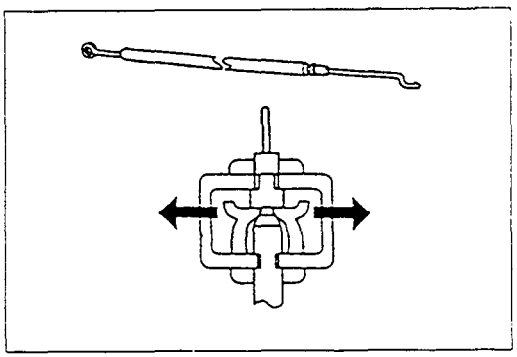

10. Cables

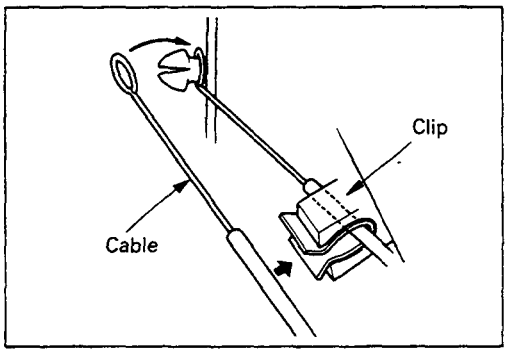

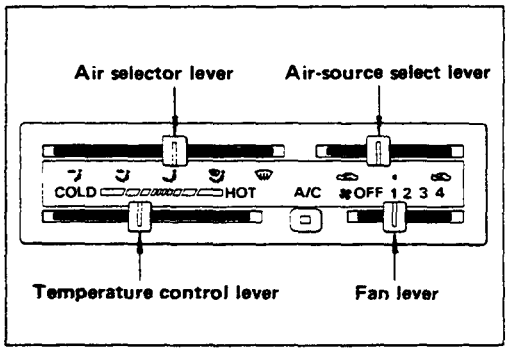

Important Operation—Installation

6. Control Lever Assembly

Adjust the control cables.

Air source control cable (Blower unit)

(1) Slide the control lever to the left.

(2) Connect the control cable at the "CIRC" position and fix it with the clip.

Temperature control cable (Heater unit)

(1) Slide the control lever to the left.

(2) Connect the control cable at the "COLD" position and fix it with the clip.

Air select control cable (Heater unit)

(1) Slide the control lever to the right.

(2) Connect the control cable at the "DEFROST" position and fix it with the clip.

Check operation.

	(AIR SELECTOR CABLE)	(TEMPERATURE CONTROL CABLE)	(AIR SOURCE SELECT CABLE)
BEZEL	(CONT. LEVER) SW	(CONT. LEVER) SW	(CONT. LEVER) SW
LHD	VENT, BI-LEVEL, FOOT, DEF/FOOT, DEF	COLD, HOT	CIRC
RHD	VENT, BI-LEVEL, FOOT, DEF/FOOT, DEF	COLD, HOT	CIRC

INSPECTION AND REPAIR

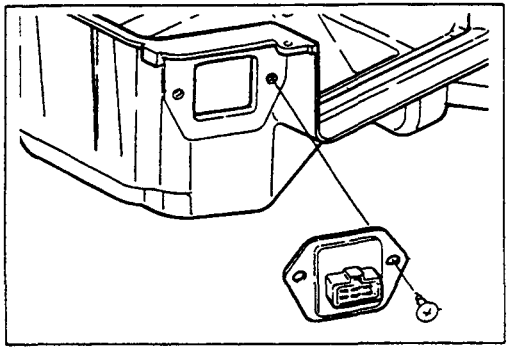

Resistor

As for air-conditioning model, fixed on right side of the evaporator unit.

As for heater only model, fixed on right side of the duct placed between blower unit and heater unit.

Replace the resistor with a new one if the coil is found to be open or if the resistance value deviates from the specified range.

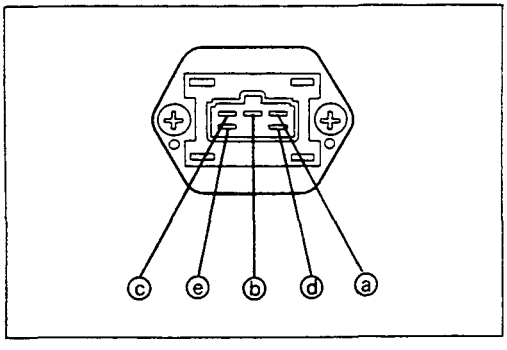

Terminal	Resistance
a — b	2.40 Ω
b — d	0.90 Ω
b — e	0.28 Ω
b — c	—

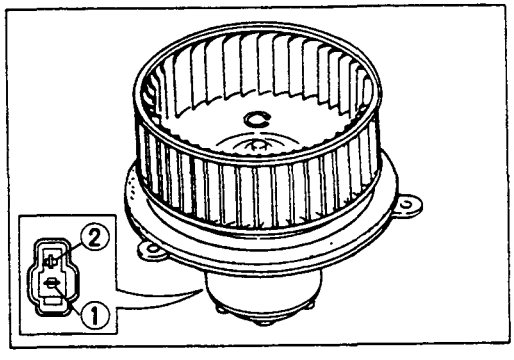

Blower motor

Check blower motor for smooth rotation.
Connect the battery positive terminal to the No.1 (No.2: RHD) terminal of the blower motor and negative to the No.2 (No.1: RHD).
Be sure to check to see if the blower motor operates correctly.

TROUBLE SHOOTING

Refer to this Section to quickly diagnose and repair problems. Each troubleshooting chart has three headings arranged from left to right.

(1) Checkpoint
(2) Trouble Cause
(3) Countermeasure

This Section is divided into seven sub-sections:

1. Trouble of fan control system
   - 1-A Blower motor would not rotate totally.
   - 1-B Blower motor does not rotate it fan switch position 1, 2, 3
2. Trouble of Air-conditioning system
   - 2-A Magnetic clutch would not engage
   - 2-B Refrigerant system defective

1-A BLOWER MOTOR WOULD NOT ROTATE TOTALLY (Refer to "WIRING HARNESS TERMINAL POSITIONS " in this section)

Checkpoint		Trouble Cause		Countermeasure
(Turn engine on and set fan switch to be at 1-4 position.) Fuse	NG	Fuse is faulty or melted		Replace the fuse
OK				
Blower motor (Check to see if there is about 12V at terminal Ⓐ— 2)	NG	Blower motor is defective		Repair or replace the blower motor
OK				
Relay; heater (Check to see if there is about 12V at terminal Ⓐ—①)	NG	Relay; heater is faulty		Replace the relay; heater
OK				
Wiring harness between relay; heater and terminal Ⓐ—①	NG	Wiring harness is defective		Replace the wiring harness
OK				
(Stop engine) Resistor	NG	Resistor is defective		Replace the resistor unit
OK				
Wiring harness between terminal Ⓒ—⑧ and ground. (Check continuity)	NG	Wiring harness is defective		Replace the wiring harness
OK				
Fan switch (Control lever)	NG	Fan switch is faulty		Replace the fan switch

1-B BLOWER MOTOR DOES NOT ROTATE AT FAN SWITCH POSITION 1, 2, 3 (Refer to "WIRING HARNESS TERMINAL POSITIONS " in this section)

Checkpoint		Trouble Cause	Countermeasure
Resistor	NG	Resistor is defective	Replace the resistor unit
OK			
Check contunuity of following sections: • between terminal Ⓑ - ⑦ and Ⓒ - ⑨ ⑥ and Ⓓ - ⑩ • between terminal Ⓑ - ⑤ and Ⓓ - ⑪	NG	Wiring harness is	Replace the wiring
OK			
Fan switch	NG	Fan switch is faulty	Replace the fan switch

2-A MAGNETIC CLUTCH WOULD NOT ENGAGE
(Refer to "WIRING HARNESS TERMINAL POSITIONS " in this section)

Checkpoint		Trouble Cause	Countermeasure
First, turn engine and A/C switch on, and set fan switch to be at 1-4 position.			
Magnetic clutch (Check to see if there is about 12V at terminal of magnetic clutch)	NG	Magnetic clutch is faulty	Repair or replace the magnetic clutch
OK			
Dual pressure switch (make short circuit between terminal (H) - (21) and (H) - (22))	NG	Dual pressure switch is defective	Replace the dual pressure switch
OK			
Wiring harness between connector H and magnetic clutch (Check to see if there is about 12V at terminal (H) - (20))	NG	Wiring harness is defective	Replace the wiring harness
OK			
Thermo switch (Make short circuit between terminal (F) - (18) and (G) - (19))	NG	Thermo switch is faulty	Replace the thermo switch
OK			
Wiring harness between connector (G) and connector (H) (Check to see if there is about 12V at terminal (H) - (18))	NG	Wiring harness is defective	Replace the wiring harness

Continued on the next page

Checkpoint		Trouble Cause		Countermeasure
Continued from the previous page				
Wiring harness between connector (F) and connector (H) (Check to see if there is about 12V at terminal (E) - 15)	NG	Wiring harness is defective		Replace the wiring harness
Air-conditioning switch	NG	Air-conditioning switch is faulty		Replace the air-conditioning switch
Fan switch	NG	Fan switch is faulty		Replace the fan switch

OK

OK

OK

2-B REFRIGERATION SYSTEM DEFECTIVE

Checkpoint		Trouble Cause	Countermeasure
First, turn engine(with engine speed of about 1 000 rpm) and A/C switch on, and set fan switch to be at 1-4 position			
Sight glass for being clear or not	NG	The system is charged unsufficiently	Charge the system with refrigerant gas
OK			
Check to see if bubbles come out within 5 seconds after turning the A/C switch off from 5 minutes running	NG	The system is over-charged	Adjust the refrigerant gas quantity
OK			
(Turn the A/C switch on again) Check to see if the pressure of high pressure side is 16 kg/cm² (228 psi/ 15.7x10² kPa) or lower	NG	Condenser is fouled or clogged	Clean or replace the condenser
	NG	Air exists in the system	Purge air from the refrigeration system
	NG	Pipe line is clogged	Clean or replace the pipe line
	NG	Expansion valve is clogged	Clean or replace the expansion valve

Continued on the next page

Checkpoint		Trouble Cause	Countermeasure
Continued from the previous page			
Check to see if the pressure of low pressure side is about 2.1 kg/cm² (30 psi/ 2.1x10² kPa)	NG	Compressor is faulty	Repair or replace the compressor
	NG	Expansion valve is defective	Replace the expansion valve

OK

ISUZU

KB - SERIES

WORKSHOP MANUAL

SECTION 2

FRAME AND CAB

DELTA OPEL ISUZU SUZUKI

Hi - Tech

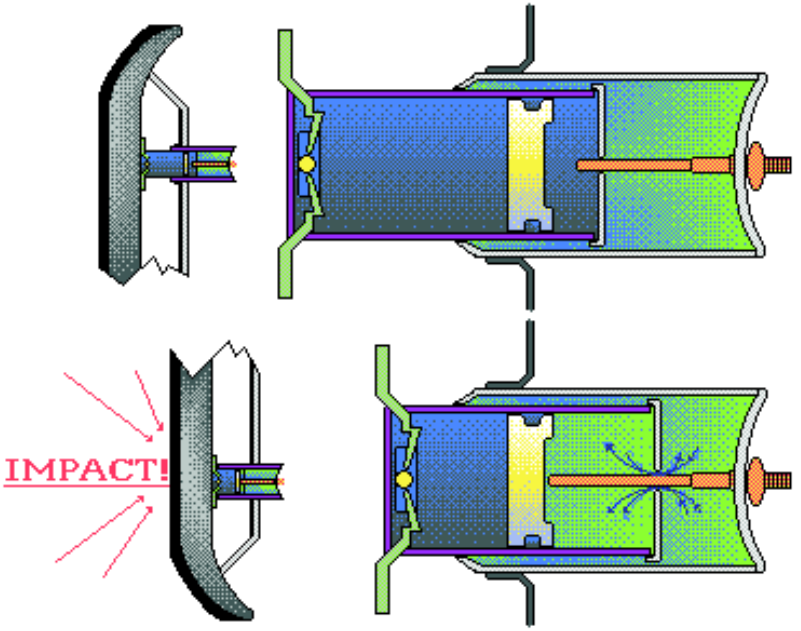

Index

Front

Rear

Body

Dimensions

KB TF 140
Frame and Bumpers

ISUZU

SECTION 2A
FRAME AND BUMPER

TABLE OF CONTENTS

	PAGE
Front bumper	2A – 1
Removal and installation	2A – 1
Adjustment	2A – 2
Rear bumper/step	2A – 3
Removal and installation	2A – 3
Rear Body	2A – 4
Removal and installation	2A – 4
Frame dimensions	2A – 7

FRONT BUMPER

REMOVAL AND INSTALLATION

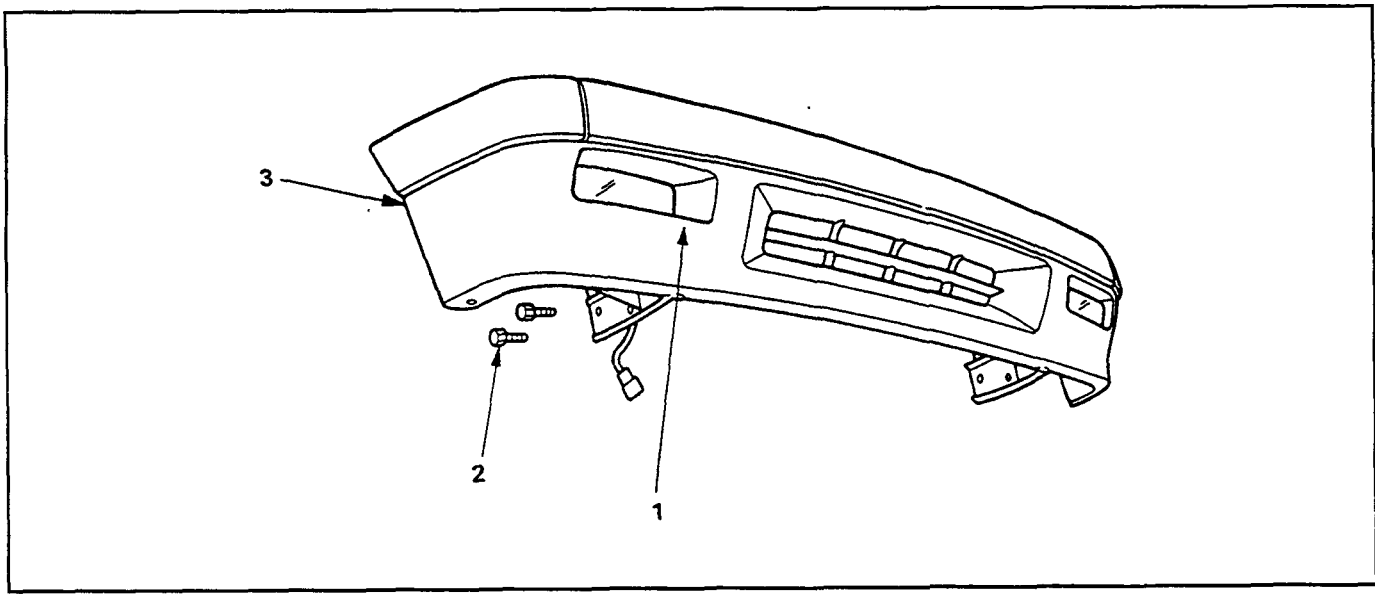

Removal Steps

▲ 1. Front combination light
2. Bolt
3. Front bumper assembly

Installation Steps

3. Front bumper assembly
▲ 2. Bolt
1. Front combination light

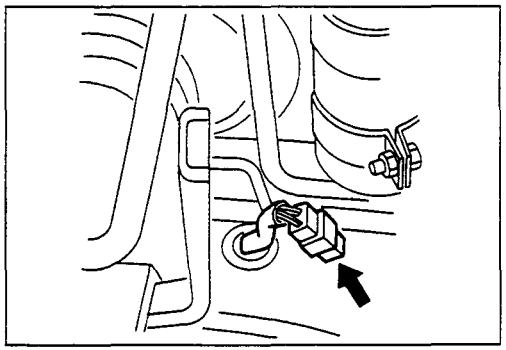

Important Operation – Removal

1. Front Combination Light

Disconnect the front combination light harness.

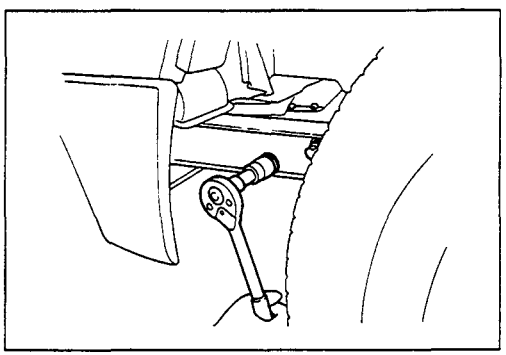

Important Operation – Installation

2. Bolt

Torque	kg•m(lb.ft/N•m)
	13.75 ± 1.75 (99.6 ± 12.7/134.9 ± 17.2)

ADJUSTMENT

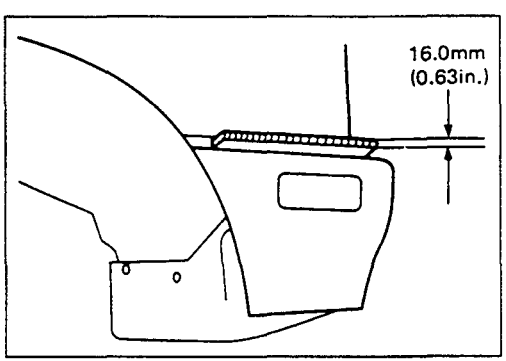

When the bolts fixing front bumper assembly are tightened, adjustment should be made with shims fitted between the back bar and front side bumper so that a clearance of 16.0 mm (0.63 in.) is provided between the lower side of the fender and the upper side of the front side bumper.

REAR BUMPER/STEP

REMOVAL AND INSTALLATION

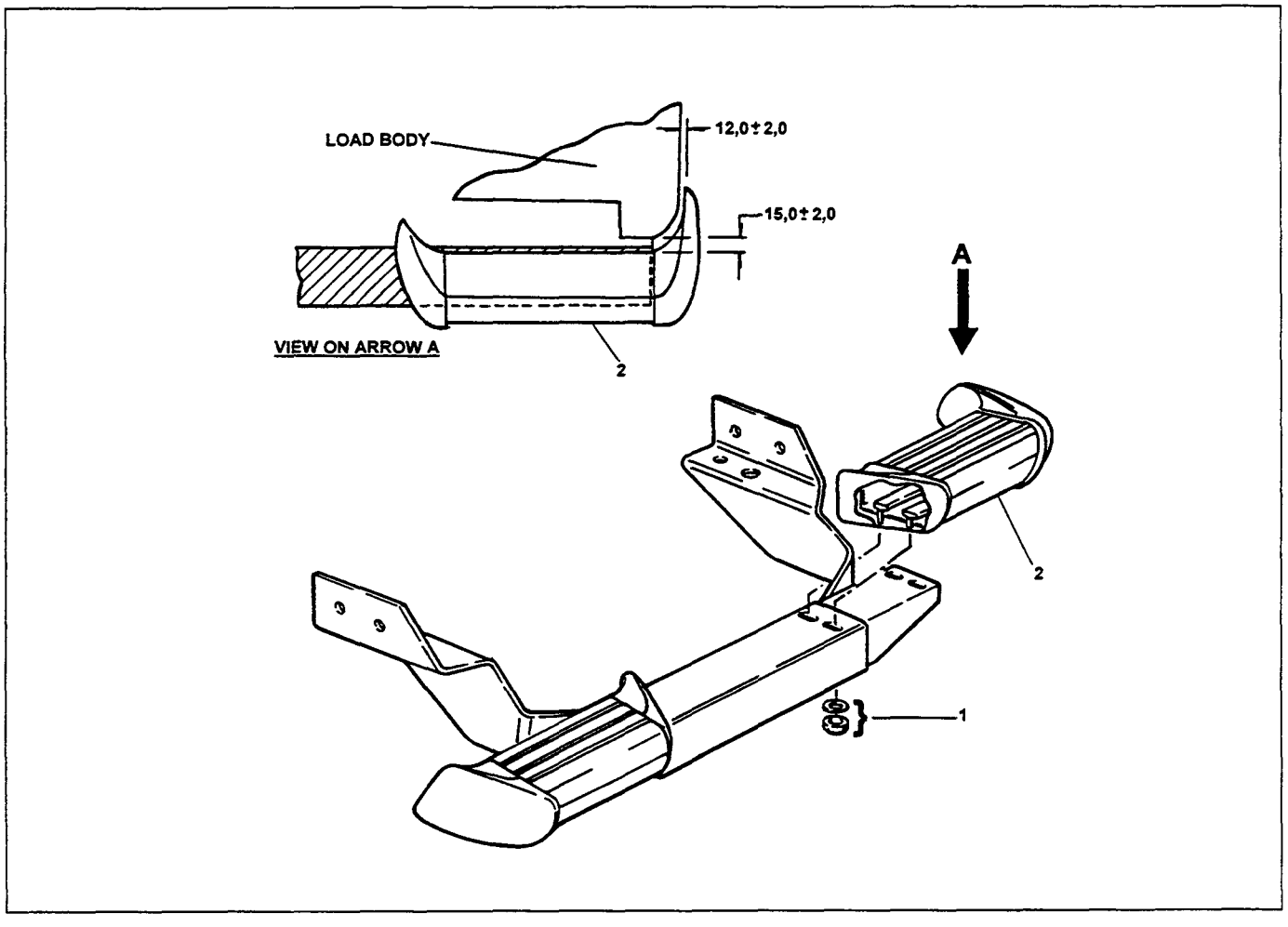

Removal Steps

1. Remove four locknuts and washers.
2. Remove bumper step from towbar.

Installation Steps

1. Align T-bolts in bumper/step with slots in tow bar.
2. Fit four locknuts and washers as shown.
3. Align bumper/step to towbar and body as indicated.
4. Tighten locknuts to 4,0 - 4,5 N.m.

REAR BODY

REMOVAL AND INSTALLATION

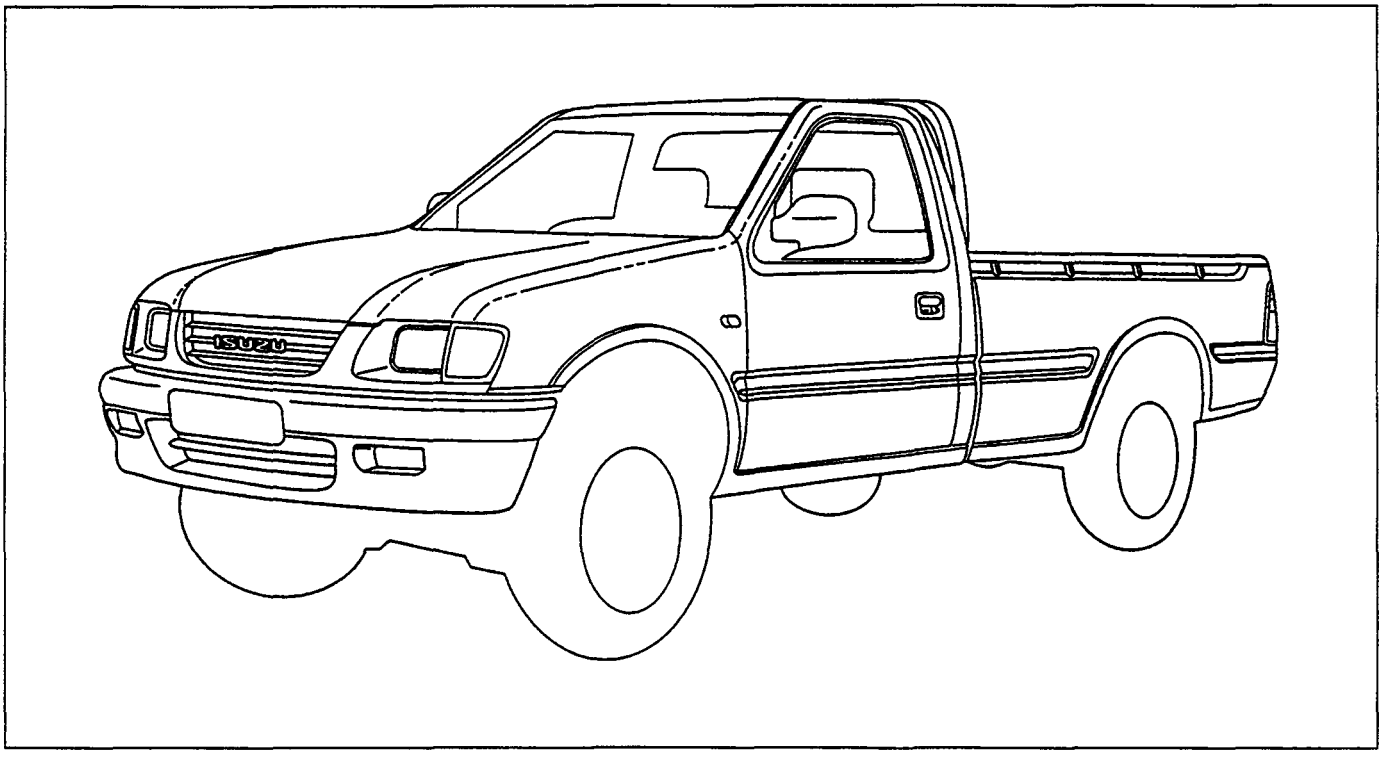

Removal Steps

1. Battery ground cable
2. Rear combination lamp harness
3. ▲ Fuel filler pipe and evaporator hose
4. Spare tyre
5. Bolt ; frame to rear body
6. ▲ Rear body assembly

Installation Steps

6. Rear body assembly
5. ▲ Bolt ; frame to rear body
4. Spare tyre
3. Fuel filler pipe and evaporator hose
2. Rear combination lamp harness
1. Battery ground cable

NOTE:

The rear body must be empty before removal.

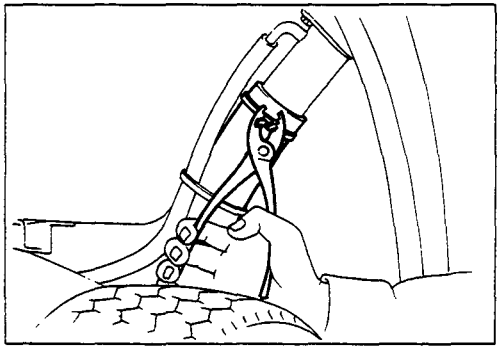

Important Operations — Removal

3. Fuel Filler Pipe and Evaporator Hose

Disconnect the fuel filler pipe and evaporator hose.

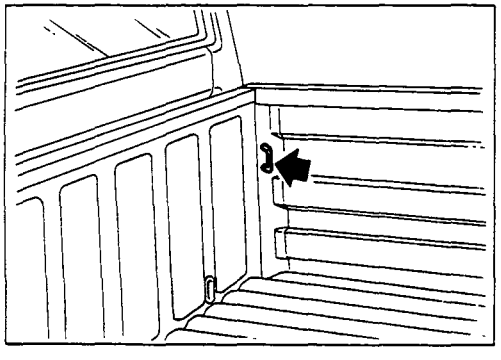

6. Rear Body Assembly

Attach lifting wires to the four rear body hooks and raise the rear body.

Note:

In lifting up rear body, take care not to dash it against cab body.

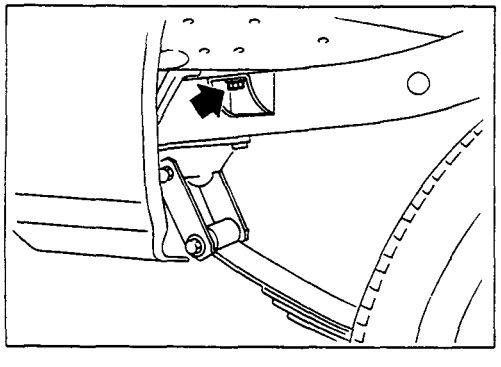

Important Operations — Installation

5. Bolt ; Frame to Body

Torque	kg·m(lb.ft/N·m)
	6.5 ±1.5 (47 ±10.8/63.8 ±14.7)

BODY MOUNTING

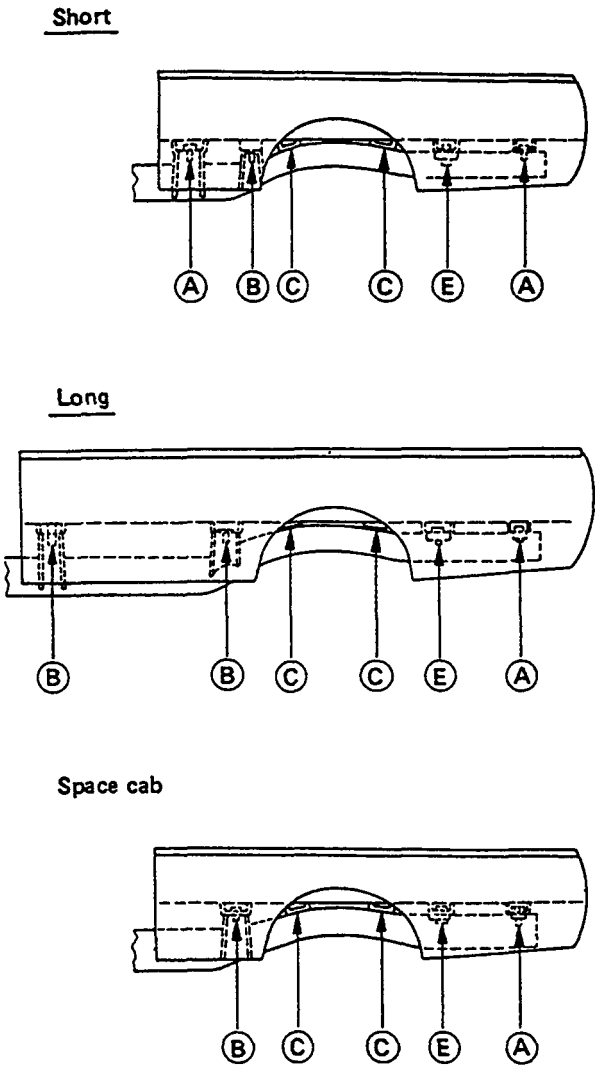

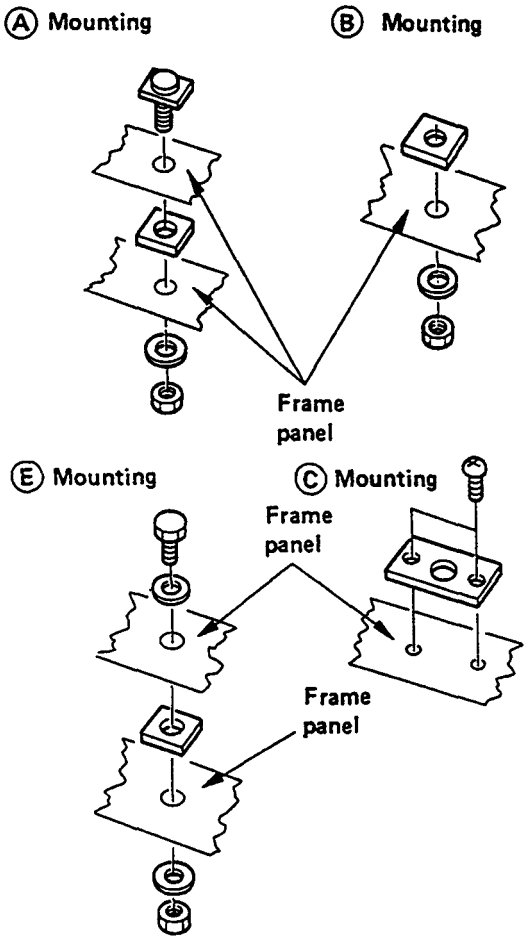

FRAME DIMENSIONS

(4 X 4, LONG WHEEL BASE MODEL)

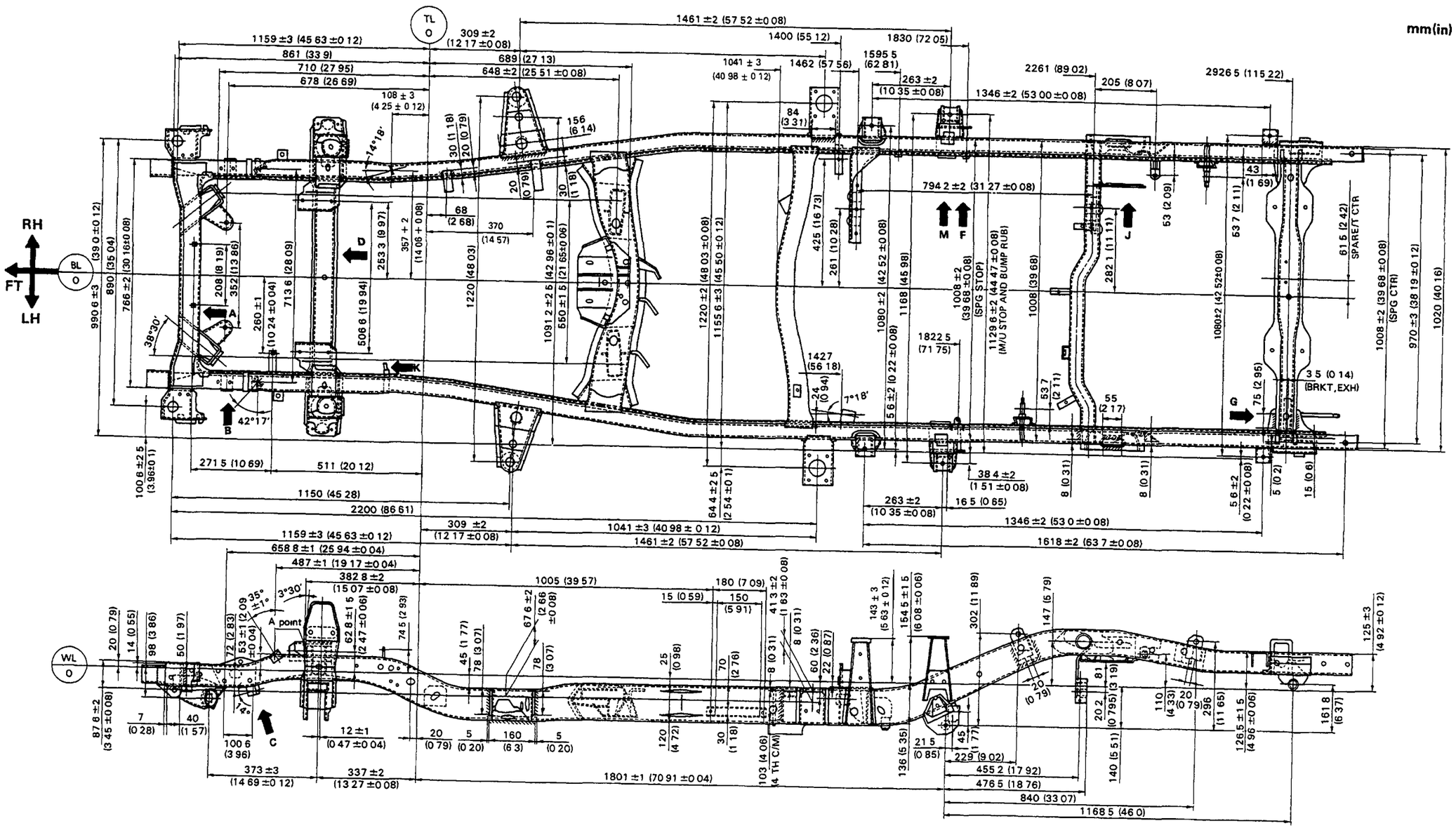

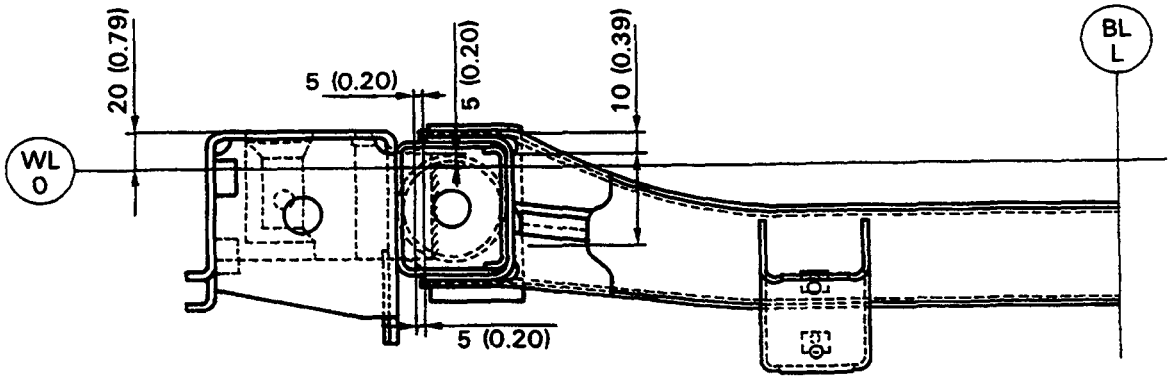

VIEW A

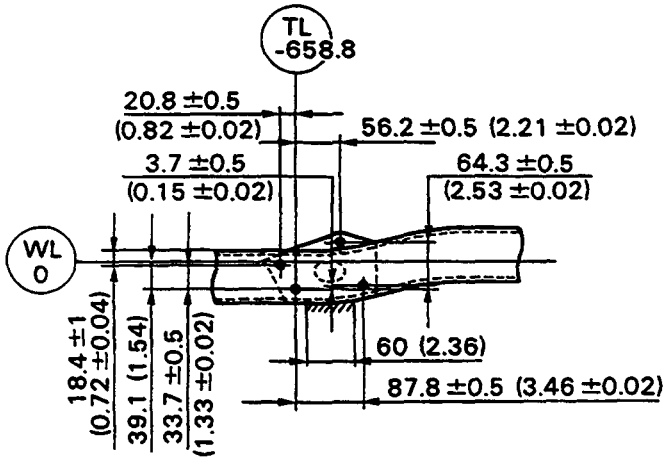

VIEW B

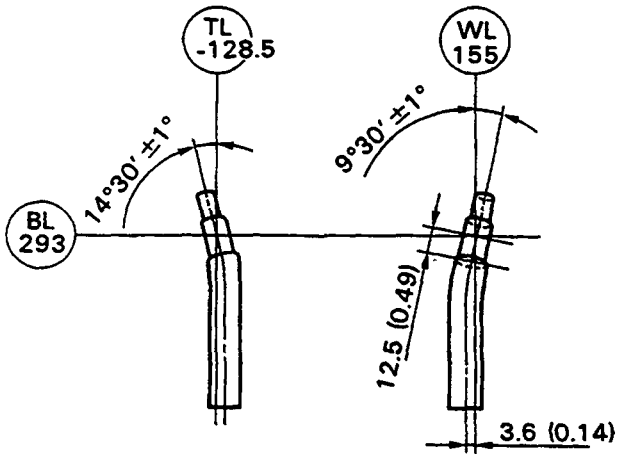

VIEW E

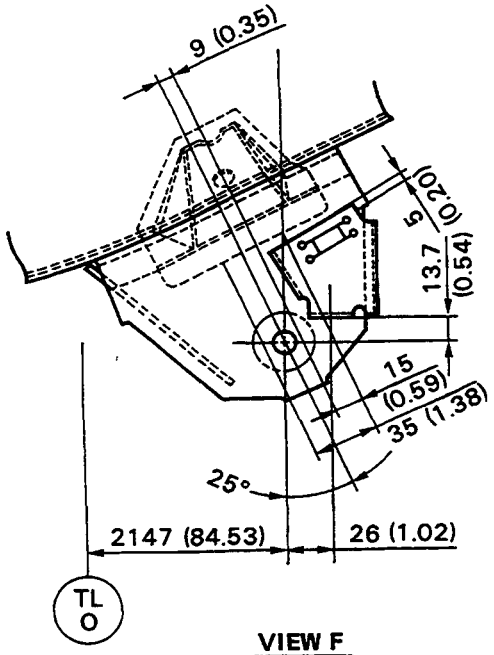

VIEW F

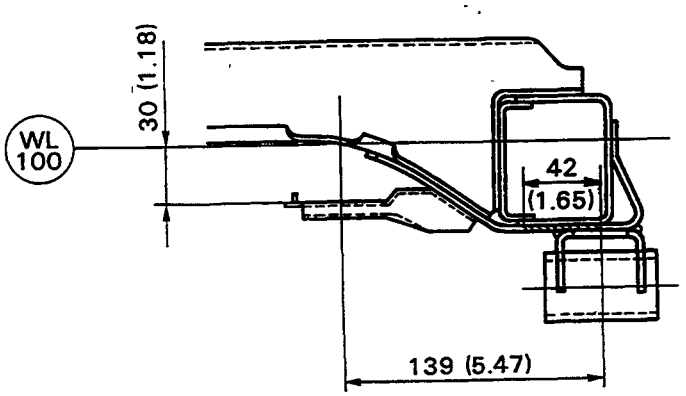

VIEW G

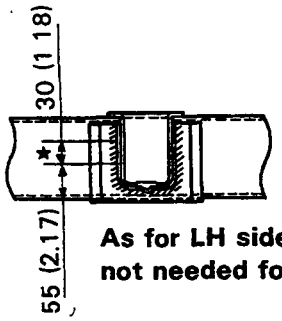

As for LH side, weldment is not needed for ★ area.

SECT P–P

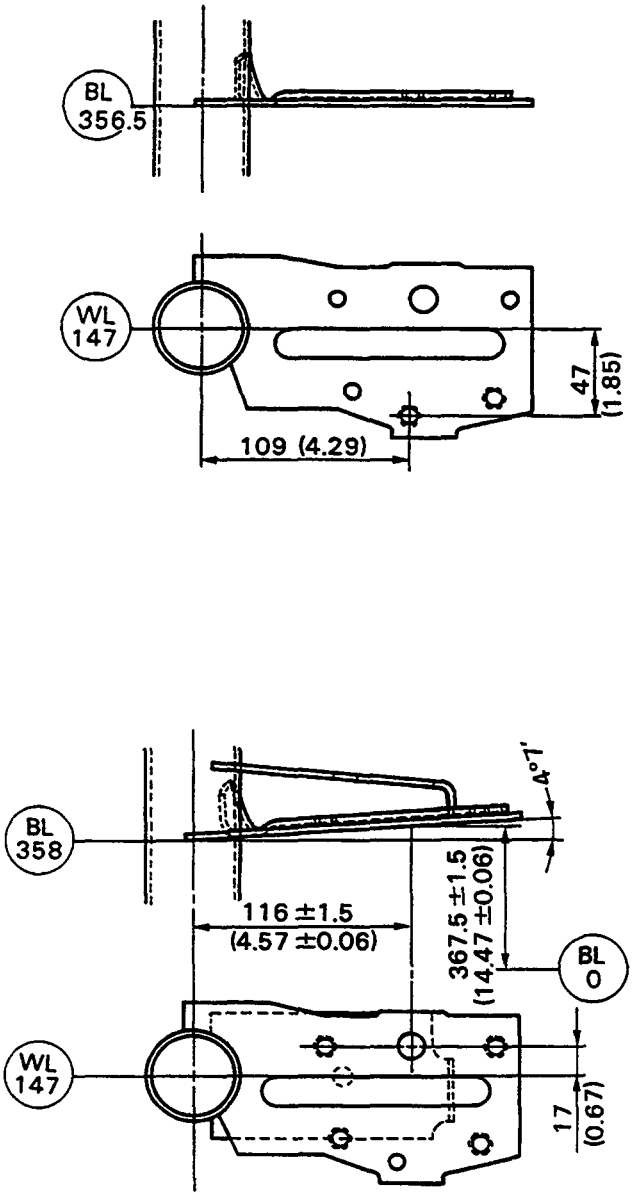
BL
356.5
WL
147
109 (4.29)
47
(1.85)
BL
358
116 ±1.5
(4.57 ±0.06)
367.5 ±1.5
(14.47 ±0.06)
4°7'
BL
0
WL
147
17
(0.67)

VIEW J

FRONT SUSPENSION DETAILS

mm (in.)

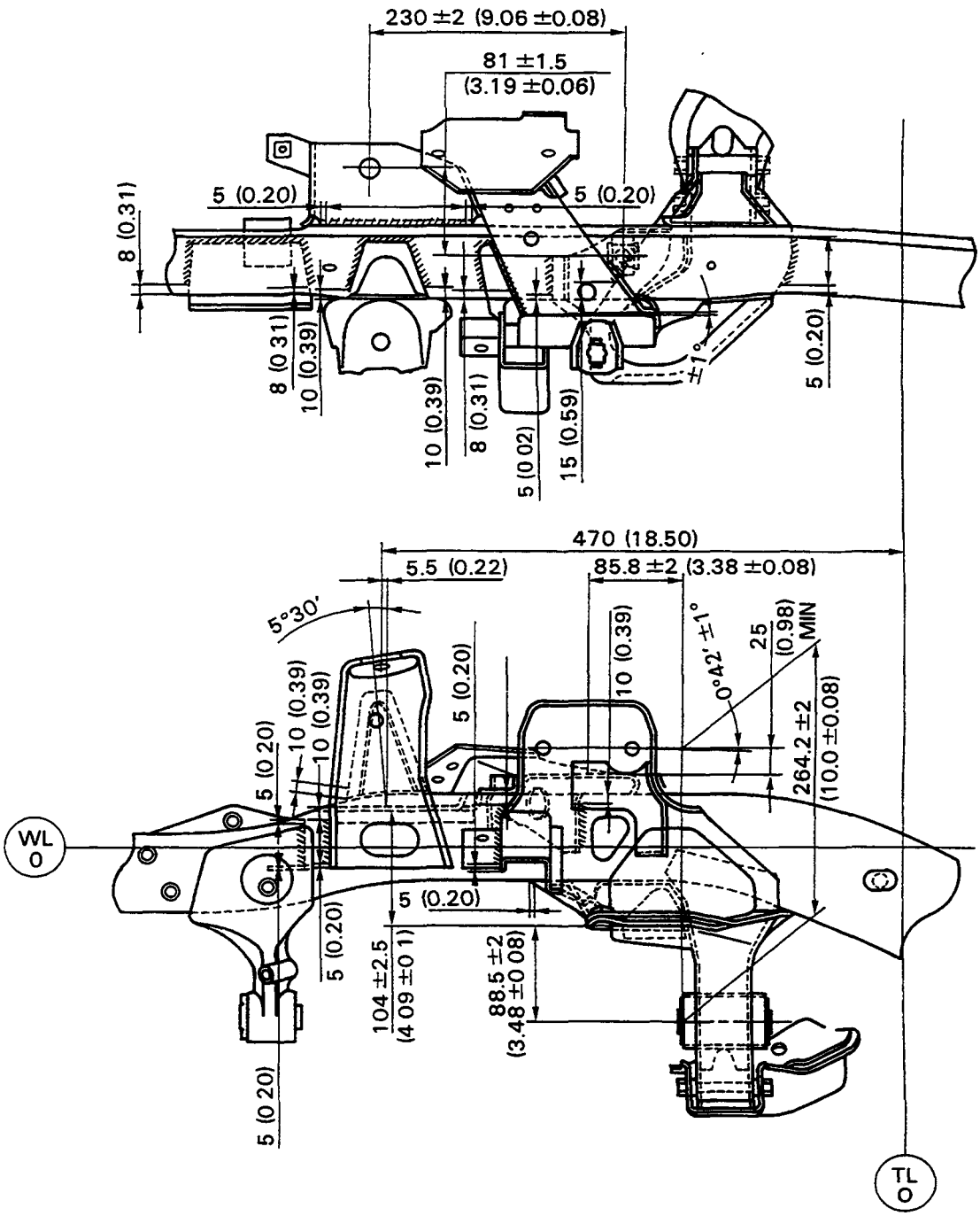

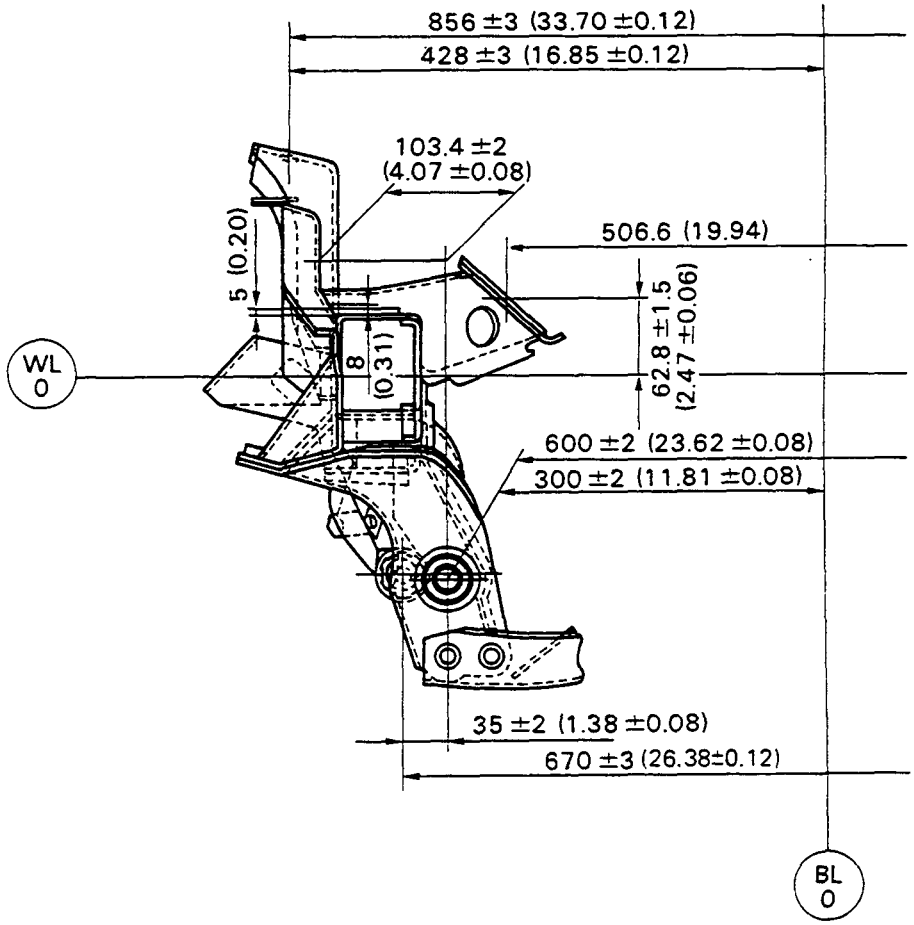
856 ±3 (33.70 ±0.12)
428 ±3 (16.85 ±0.12)
103.4 ±2
(4.07 ±0.08)
506.6 (19.94)
5 (0.20)
8
(0.31)
62.8 ±1.5
(2.47 ±0.06)
WL
0
600 ±2 (23.62 ±0.08)
300 ±2 (11.81 ±0.08)
35 ±2 (1.38 ±0.08)
670 ±3 (26.38±0.12)
BL
0

FRAME DIMENSIONS

(4 X 2, SHORT WHEEL BASE MODEL)

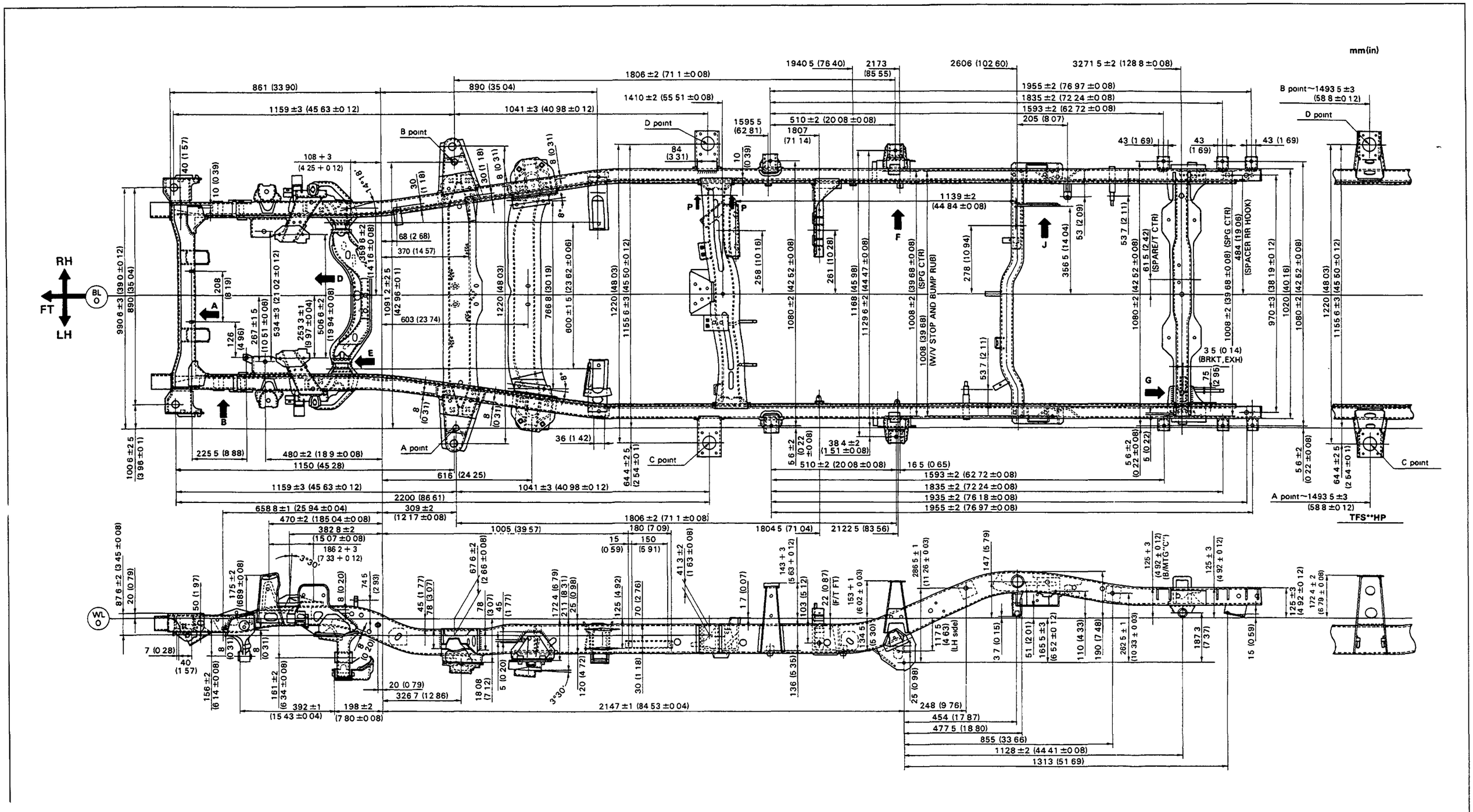

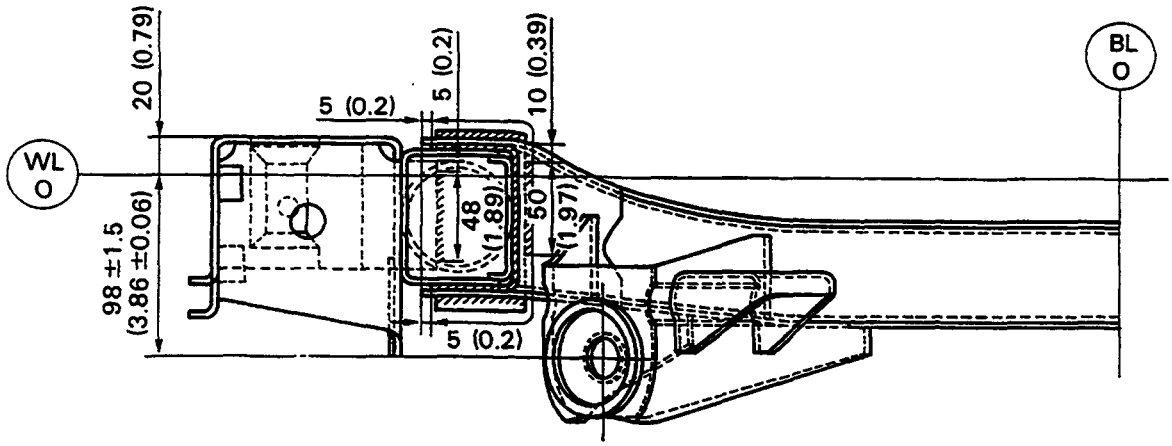

VIEW A

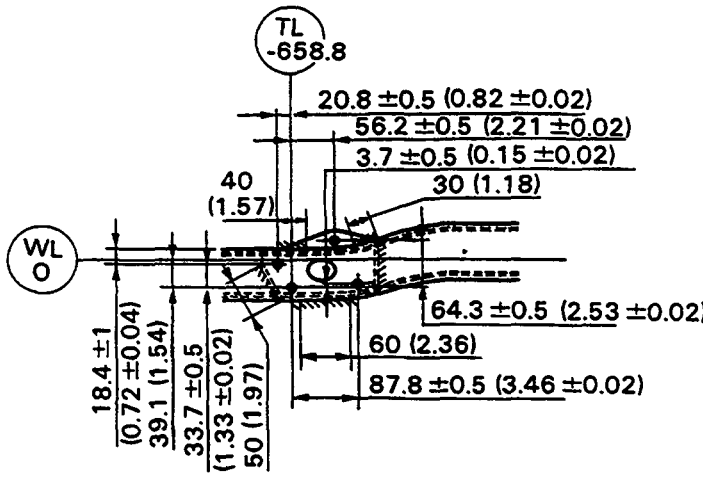

VIEW B

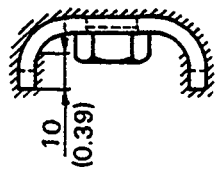

VIEW C

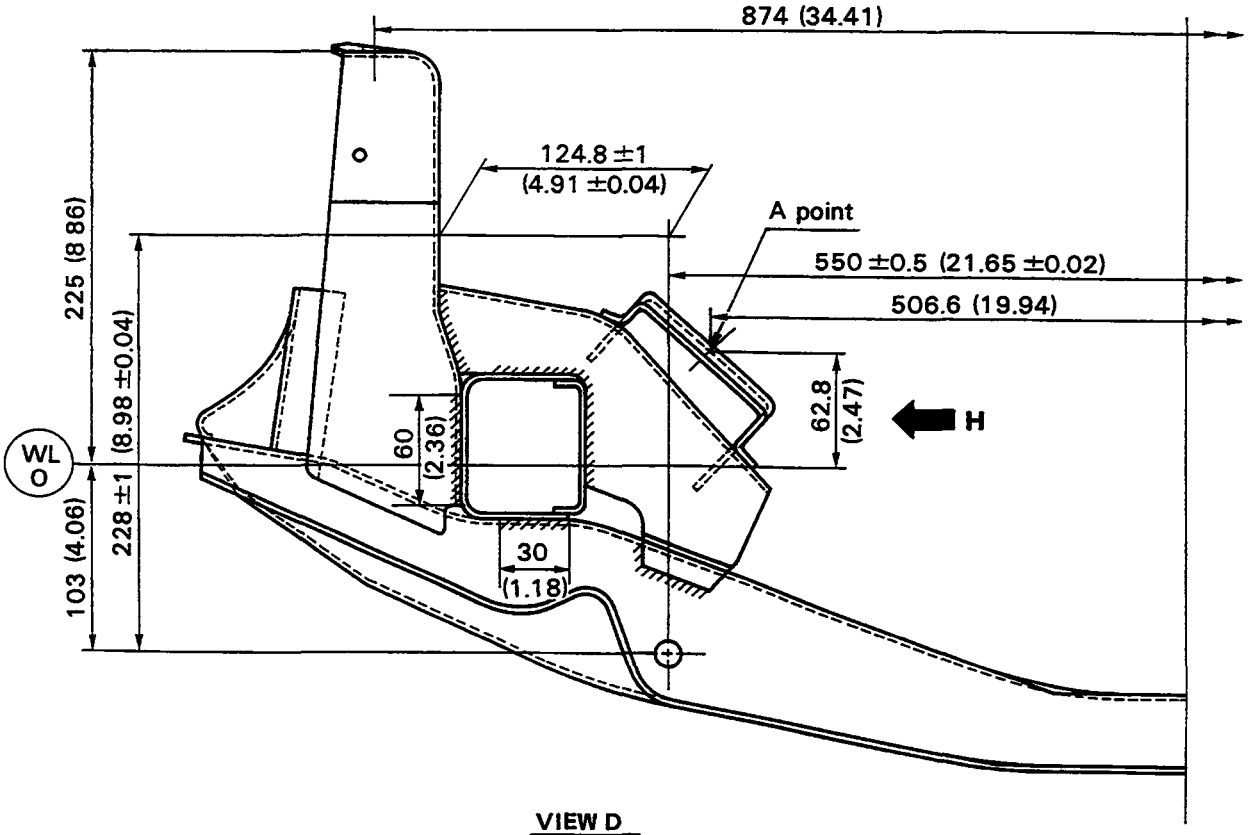
874 (34.41)
124.8 ±1
(4.91 ±0.04)
A point
550 ±0.5 (21.65 ±0.02)
506.6 (19.94)
225 (8.86)
(8.98 ±0.04)
228 ±1
103 (4.06)
WL
O
60
(2.36)
30
(1.18)
62.8
(2.47)
H

VIEW D

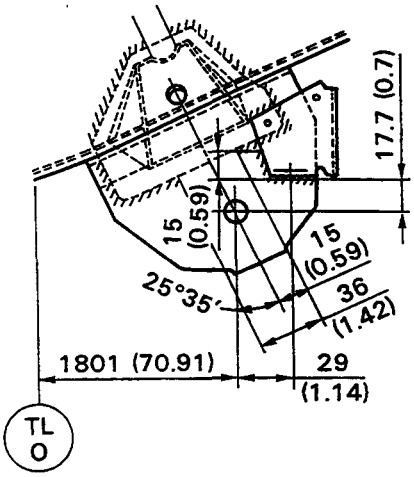
17.7 (0.7)
15
(0.59)
15
(0.59)
25°35′
36
(1.42)
1801 (70.91)
29
(1.14)
TL
O

VIEW F

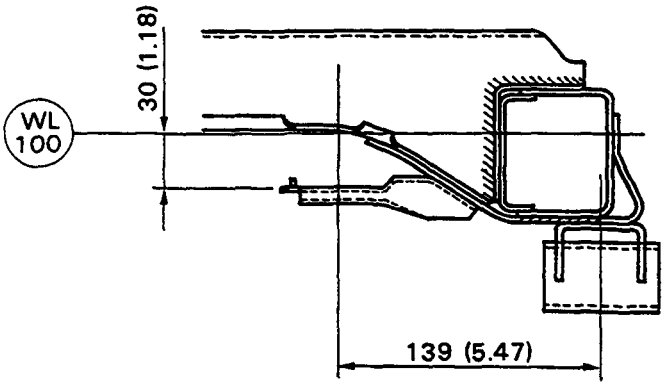
WL
100
30 (1.18)
139 (5.47)

VIEW G

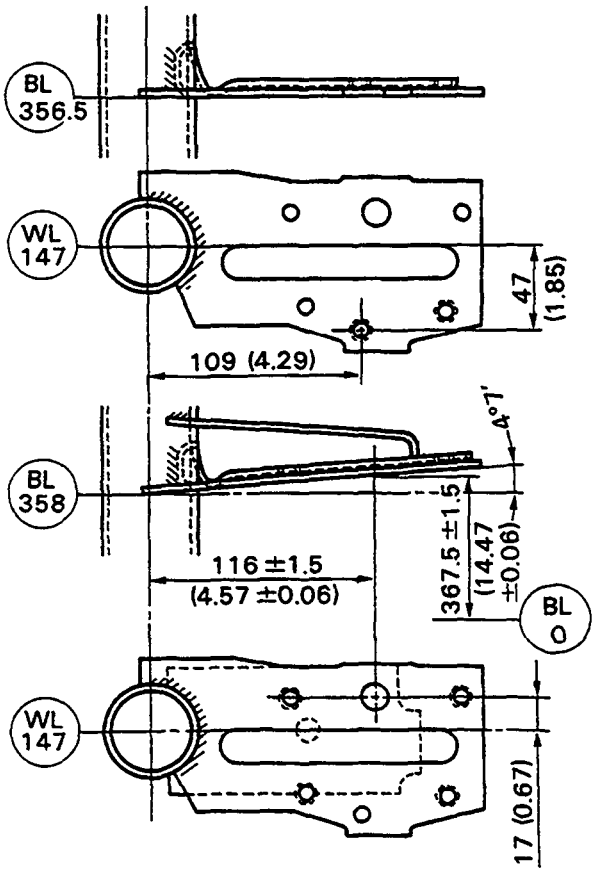
BL
356.5
WL
147
47
(1.85)
109 (4.29)
4°7'
BL
358
367.5 ±1.5
(14.47
±0.06)
116 ±1.5
(4.57 ±0.06)
BL
0
WL
147
17 (0.67)

VIEW J

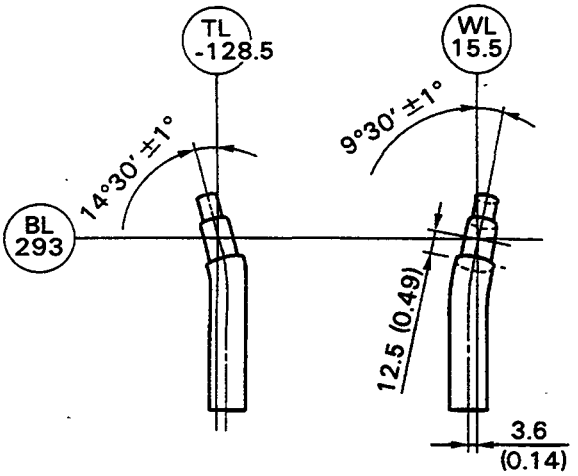
TL
-128.5
WL
15.5
14°30' ±1°
9°30' ±1°
BL
293
12.5 (0.49)
3.6
(0.14)

VIEW K

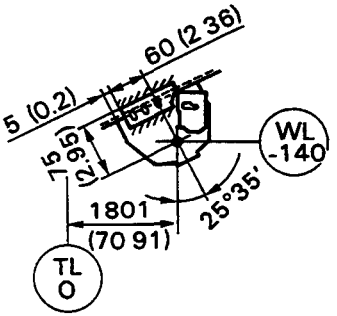
60 (2.36)
5 (0.2)
WL
-140
25°35'
1801
(70.91)
TL
0

VIEW M

FRAME DIMENSIONS

(4 X 2, LONG WHEEL BASE MODEL)

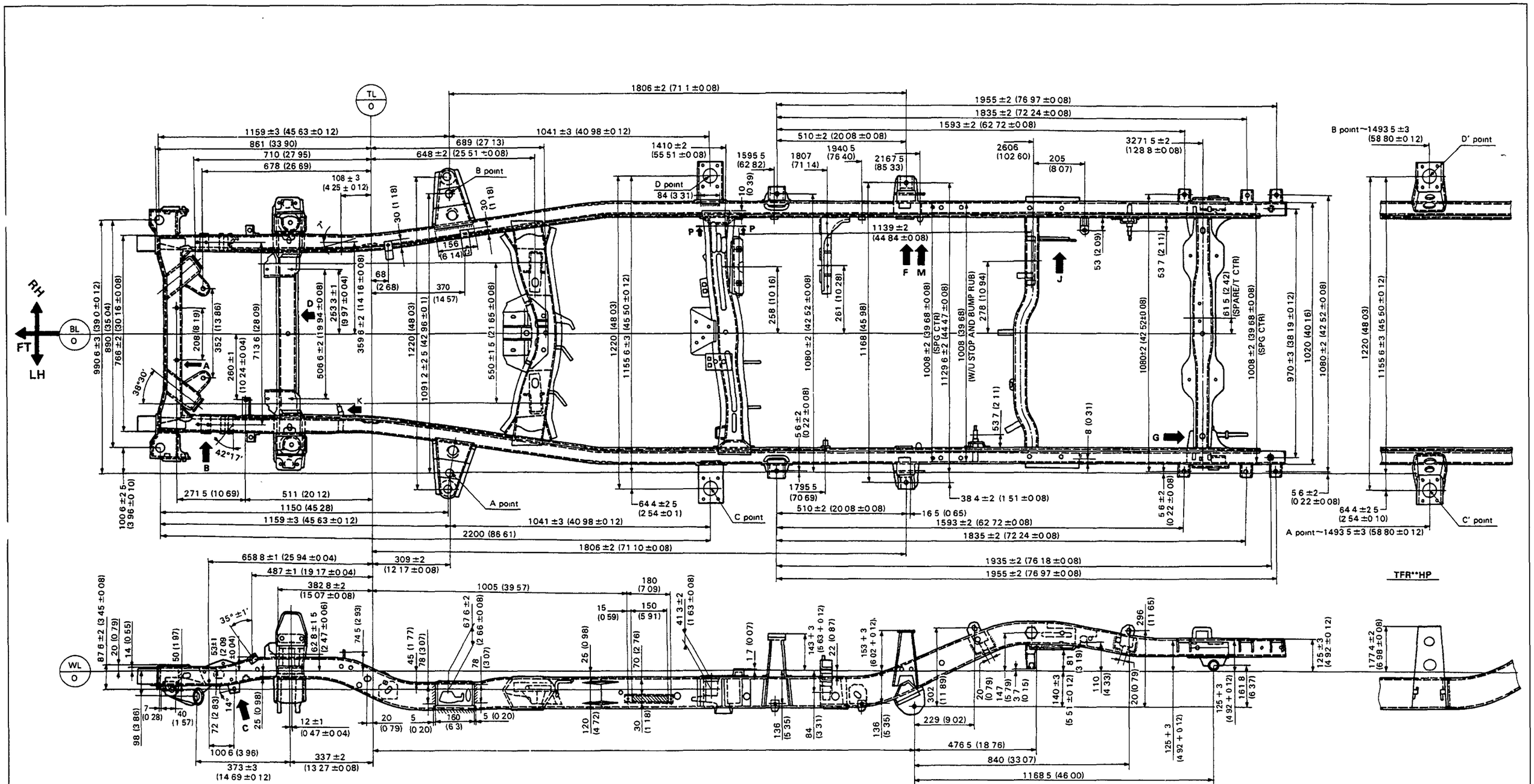

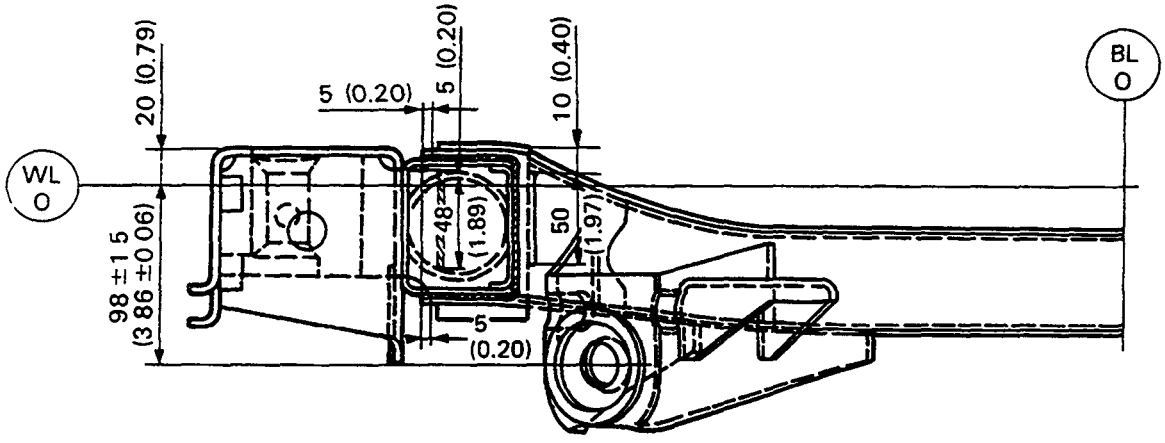

VIEW A

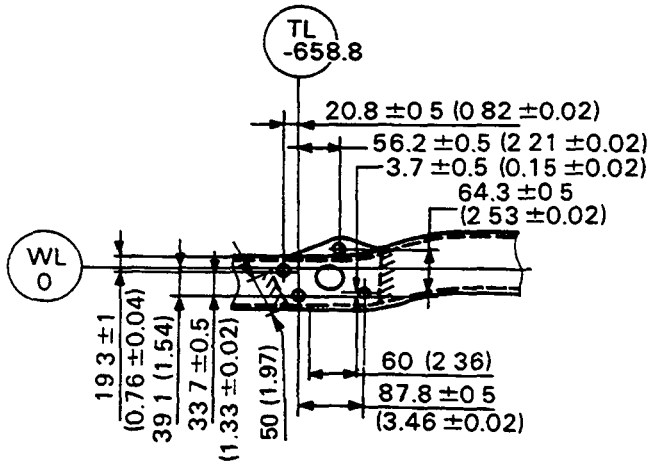

VIEW B

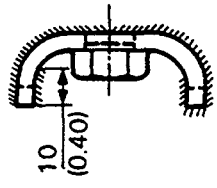

VIEW C

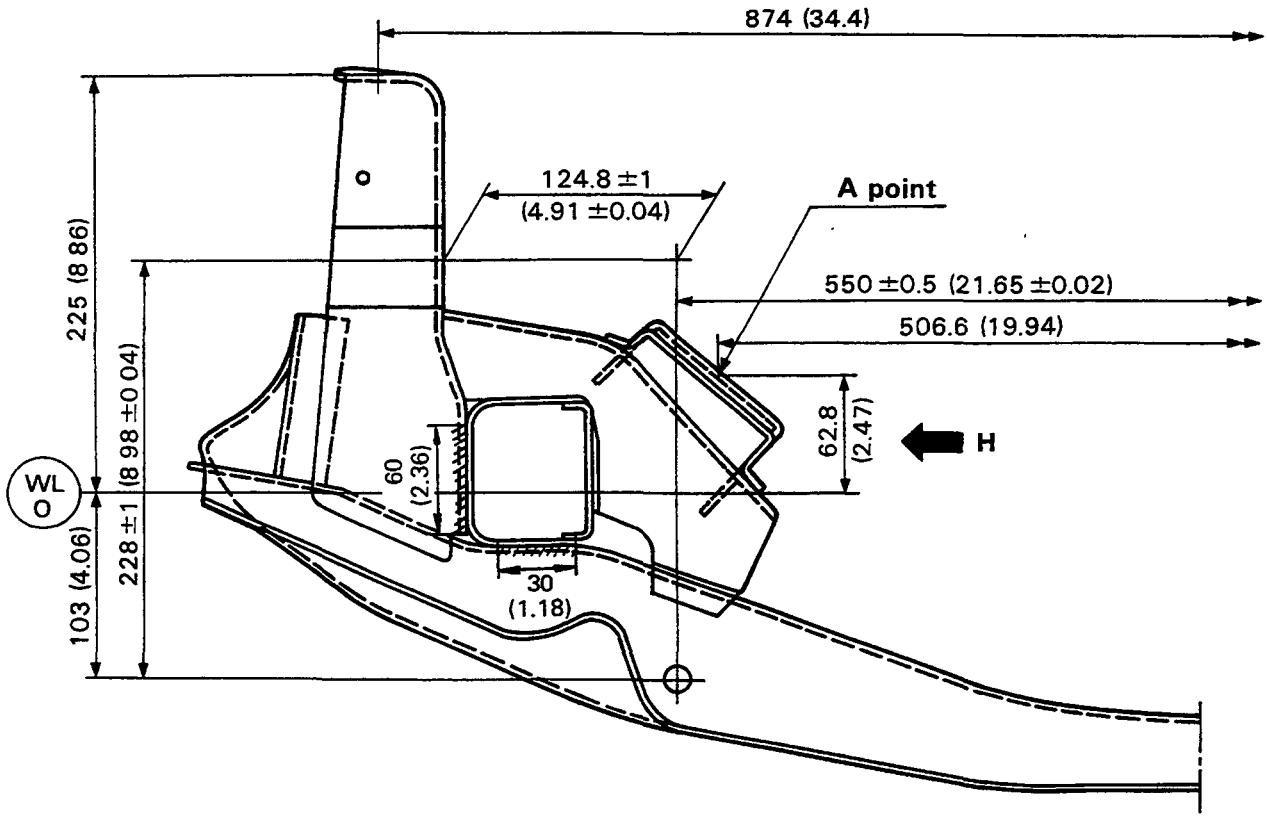

VIEW D

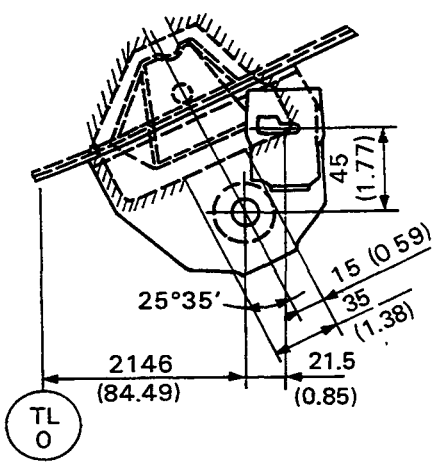

VIEW F

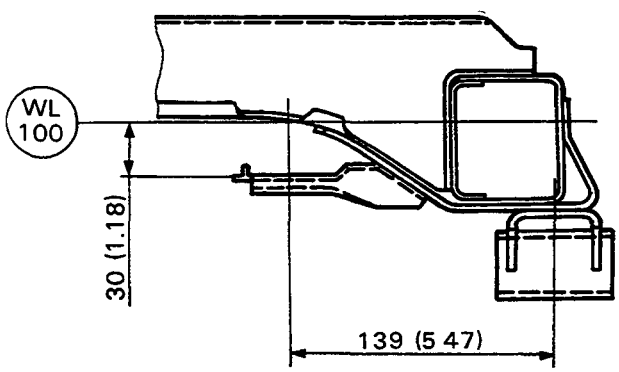

VIEW G

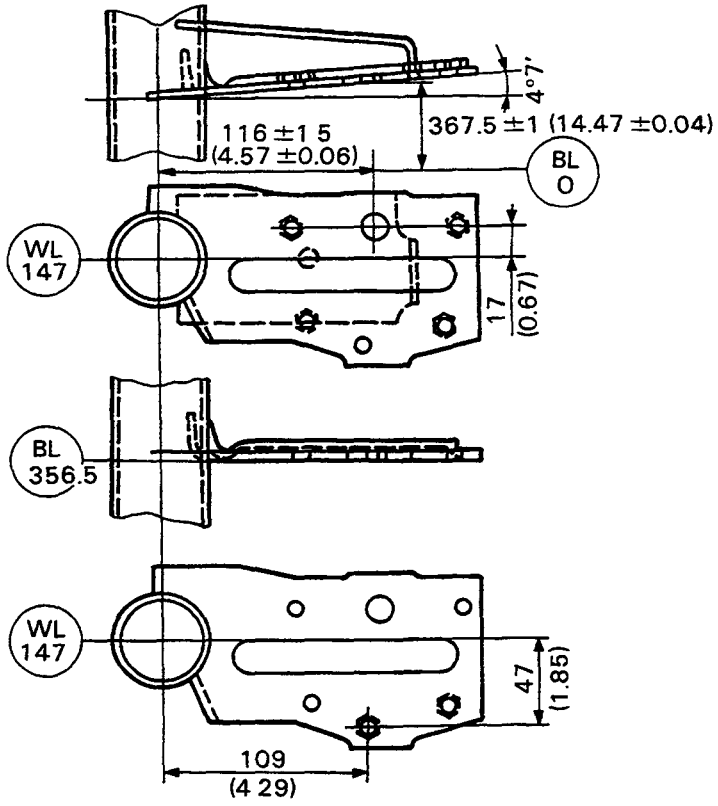
4°7'
367.5 ±1 (14.47 ±0.04)
116 ±1 5
(4.57 ±0.06)
BL
0
WL
147
17
(0.67)
BL
356.5
WL
147
47
(1.85)
109
(4 29)

VIEW J

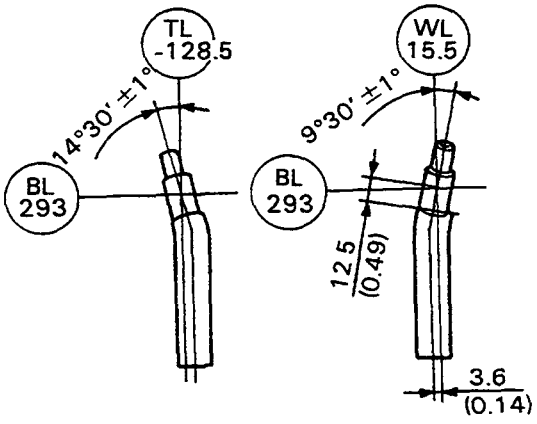
TL
-128.5
14°30' ±1°
BL
293
WL
15.5
9°30' ±1°
BL
293
12 5
(0.49)
3.6
(0.14)

VIEW K

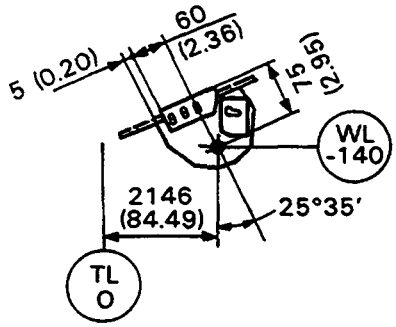

VIEW M

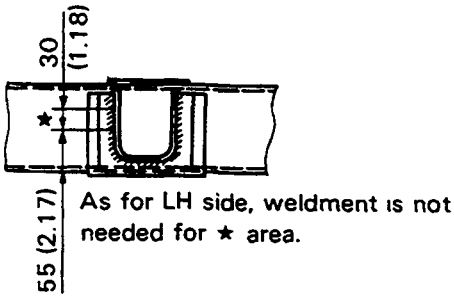

SECT P–P

ISUZU

KB - SERIES

WORKSHOP MANUAL

SECTION 2B

SHEET METAL

SECTION 2B
SHEET METAL

TABLE OF CONTENTS

PAGE

Removal and installation 2B– 2
Adjustment 2B– 5
Cab protector 2B– 6
Removal and installation 2B– 6
Exterior rope hook 2B– 7
Removal and installation 2B– 7
Interior rope hook 2B– 8
Removal and installation 2B– 8

REMOVAL AND INSTALLATION

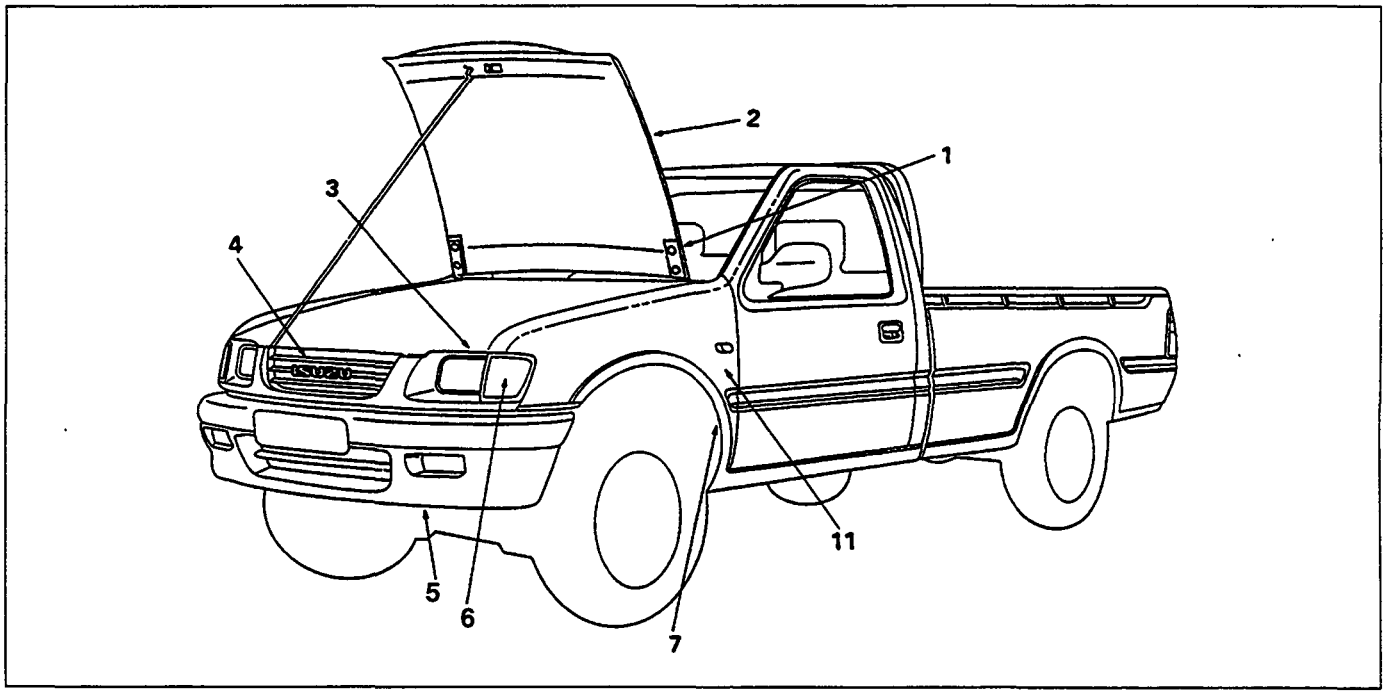

Removal Steps

Engine Hood

▲ 1. Bolt
2. Engine hood assembly

Fender

3. Combination lamp connector
▲ 4. Radiator grille
5. Bumper assembly
▲ 6. Combination lamp
▲ 7. Inner liner
8. Steering lower cover or speaker grille
9. Antenna cable (Passenger side)
10. ECM box (Driver side)
▲ 11. Fender

Installation Steps

Fender

11. Fender
10. ECM box (Driver side)
9. Antenna cable (Passenger side)
8. Steering lower cover or speaker grille
7. Inner liner
6. Combination lamp
5. Bumper assembly
4. Radiator grille
3. Combination lamp connector

Engine Hood

2. Engine hood assembly
1. Bolt

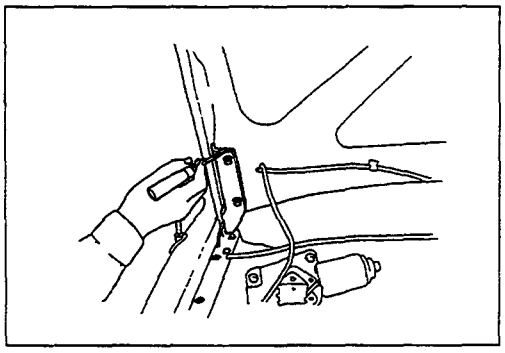

Important Operations – Removal

1. Bolt

Before removing the hinges from the engine hood, scribe a mark showing of the hinges to facilitate installation in the original position.

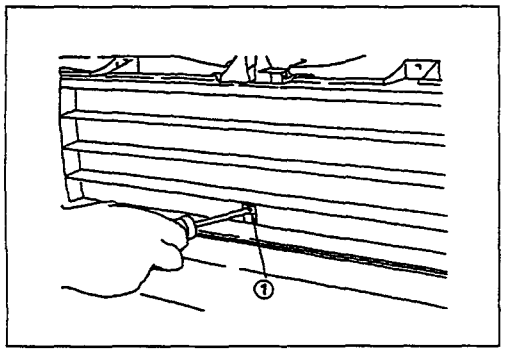

4. Radiator Grille

Remove the radiator grille centre bolt (1).

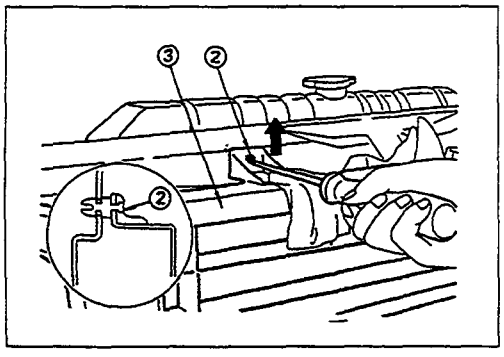

Use a screwdriver to raise the clip (2) and release the lock. Place a clean rag beneath the screwdriver tip to protect the body painted surfaces.
Remove the radiator grille (3).

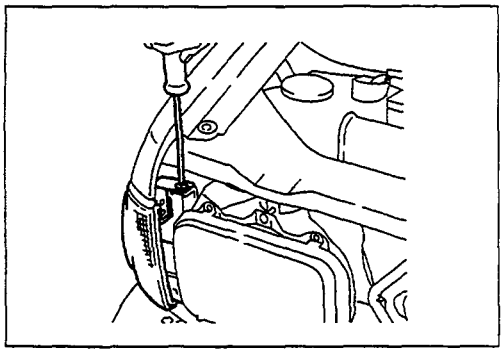

6. Combination Lamp

Remove the combination lamp fixing screws.

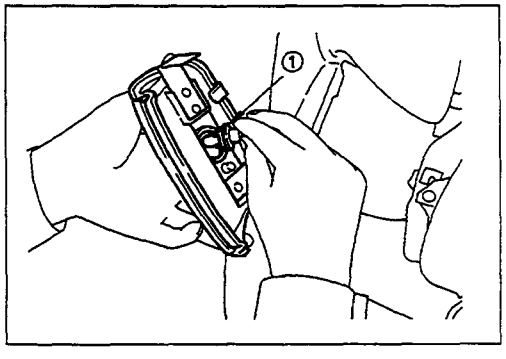

Turn the socket (1) counterclockwise to disconnect it from the marker light housing.
Pull the bulb from the socket.

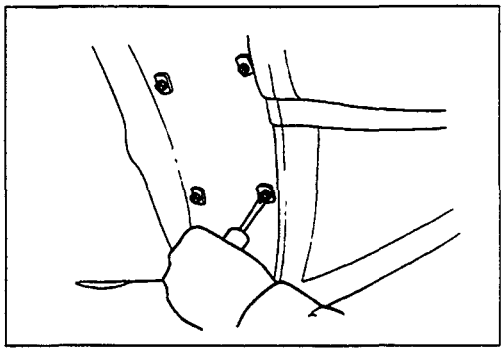

7. Inner Liner

Remove the inner liner fixing screws.

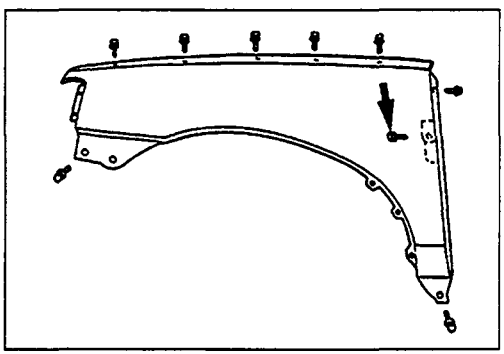

11. Fender

First, remove the bolt (See illustration arrow mark) from the inside of the car.

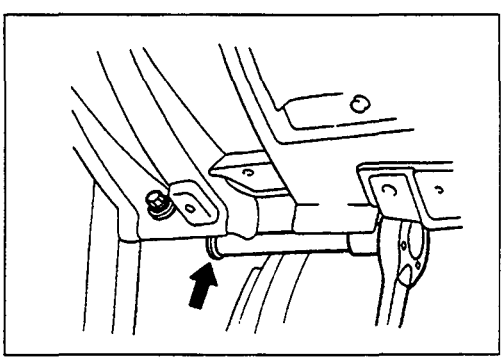

ADJUSTMENT

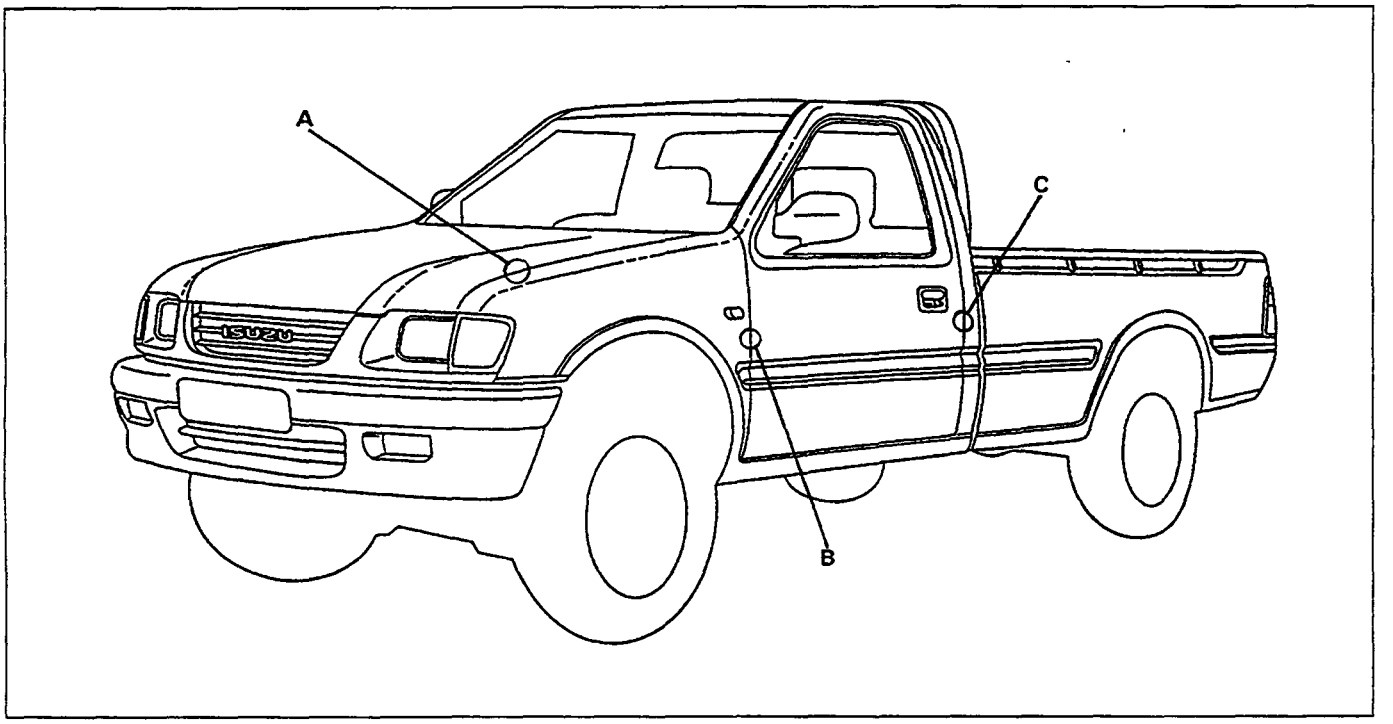

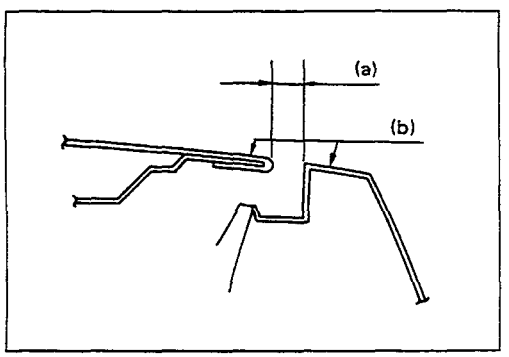

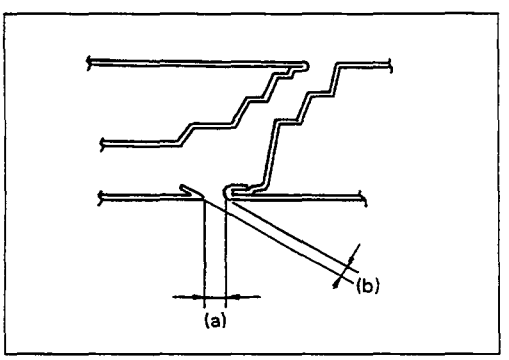

A. Check the Engine Hood and Fender

mm(in).

Clearance (a)	4 (0.157)
Height (b)	Flush

Adjust the clearance (a) with the hinges on the engine hood.
Adjust the step (b) with the hood rests.

B. Check the Fender and Door

C. Check the Door and Body

D. Check the Front Door and Rear Door

mm(in).

Clearance (a)	5.5 (0.217)
Height (b)	Flush

Adjust the clearance (a) with the door hinges.
Adjust the step (b) by tapping on the fender lightly with a rubber hammer.

CAB PROTECTOR

REMOVAL AND INSTALLATION

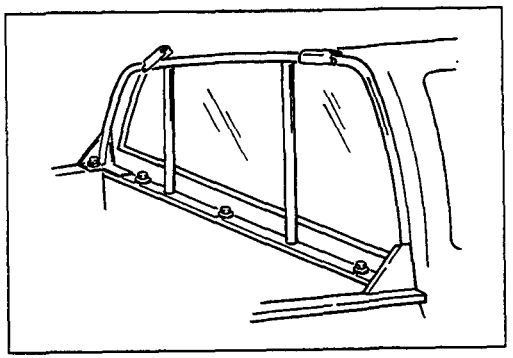

Removal

1. Using a 13 mm spanner remove securing bolt (2) and ensure washers (3 and 4) are kept together with each bolt
2. Lift up and remove cab protecter unit from pick-up box.

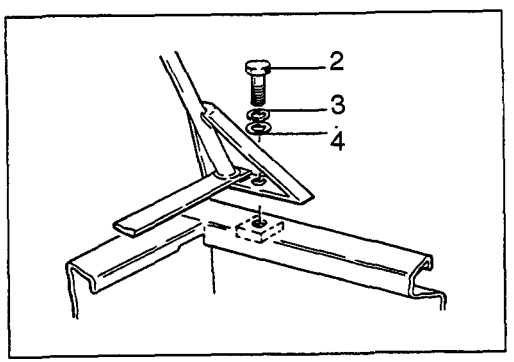

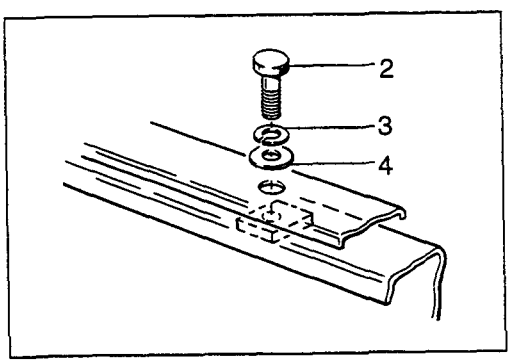

Installation

1. Position cab protecter unit in place above the holes in side rails and front rail.
2. Place washers (3 and 4) onto bolt (2) and screw bolts into existing weldnuts on side rails and front rail.

EXTERIOR ROPE HOOK

REMOVAL AND INSTALLATION

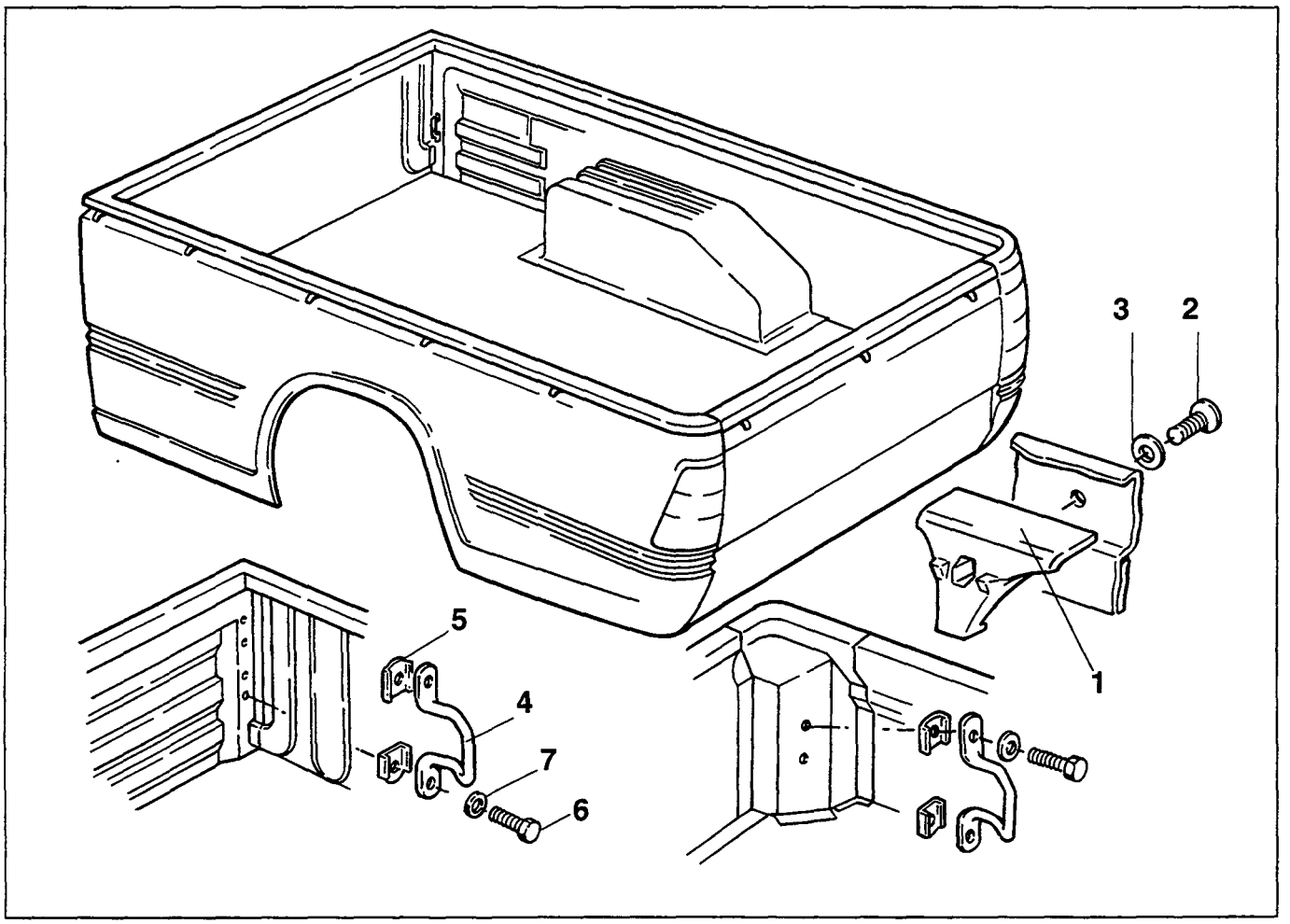

Removal

1. Hold rope hook (1) firmly and using a Phillips screw driver remove screws (2).

Note: Ensure washer (3) is kept with each screw (2).

Installation

1. Place rope hook (1) from underneath the rail ensuring that hole in item (1) and hole in rail lines up.
2. Place washer (3) on screw (2) and tighten onto rail accordingly.

INTERIOR ROPE HOOK

REMOVAL AND INSTALLATION

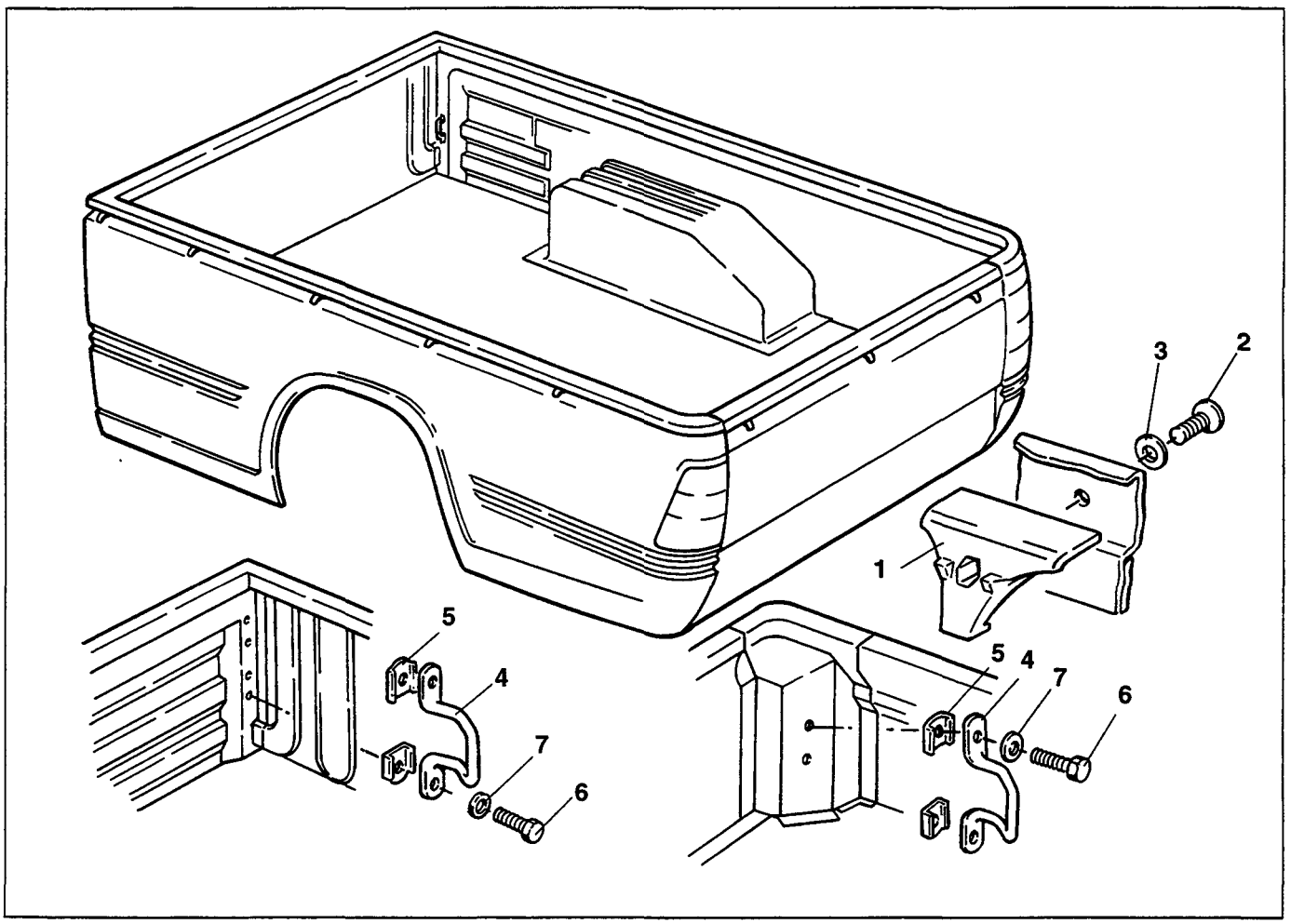

Removal

1. Using a 13 mm socket/spanner remove bolts (6).

Note: Keep item 6 together with items 4, 5 and 7.

Installation

1. Position item 5 with round edge corresponding with rounded edge of item 4.
2. Place item 7 onto item 6 and insert through holes of item 4 and 5.
3. Secure to existing weld nuts in front and rear corner posts.

ISUZU

KB - SERIES

WORKSHOP MANUAL

SECTION 3

STEERING, SUSPENSION, WHEELS AND TYRES

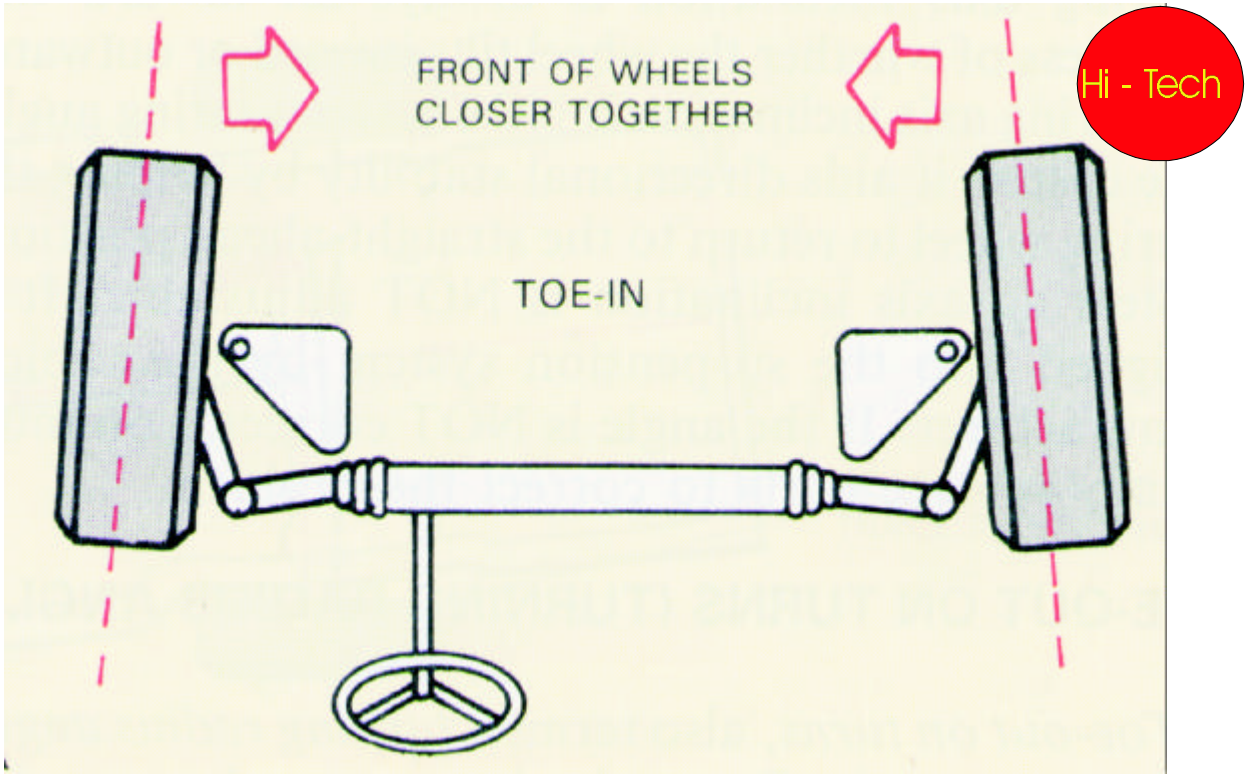

KB TF 140 Alignment

ISUZU

Index
Caster
Camber
Toe-In
Trim-Height

SECTION 3A
FRONT ALIGNMENT

TABLE OF CONTENTS

PAGE

Alignment ..... 3A—2
Caster ..... 3A—2
Camber ..... 3A—3
Toe-in ..... 3A—4
Trim Height or Vehicle Height ..... 3A—4
Strut Bar ..... 3A—6

- Tyre pressure and abnormal wear
- Front hub bearings for axial play
- Ball joints on steering linkage for play
- Suspension ball joint
- Operation of shock absorber
- Tightness of suspension parts

ALIGNEMENT

Inspection of Wheel Alignment

The points listed in table at left must be checked prior to inspecting front wheel alignment.

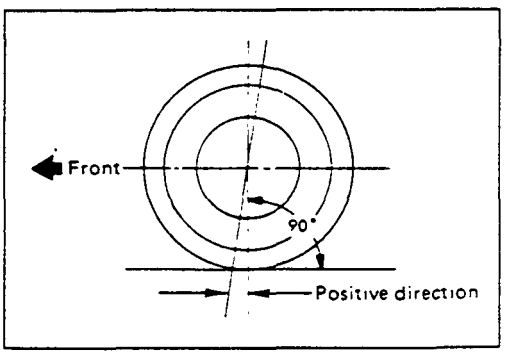

CASTER

	Short Wheel Base	Long Wheel Base
4 x 2 model	1°35' ± 45'	1°50' ± 45'
4 x 4 model	1°55' ± 45'	2°10' ± 45'
4 x2 Flat Deck	—	1°10' ± 45'
4 x 4 Flat Deck	—	2°10' ± 45'

Note:

Left and right side to be equal within 35'.

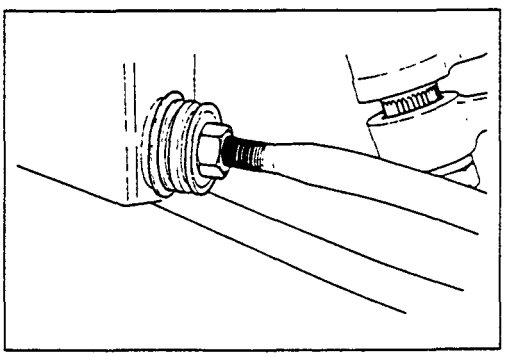

[4 x 2 Model]

The caster angle can be adjusted by varying lenght of the strut bar (adjust with lock nut) and shims should not be used for adjustment.

Lock Nut Torque	kg•m(lb.ft/N•m)
13.0 ± 1.3 (94.0 ± 9.4/127.5 ± 12.8)	

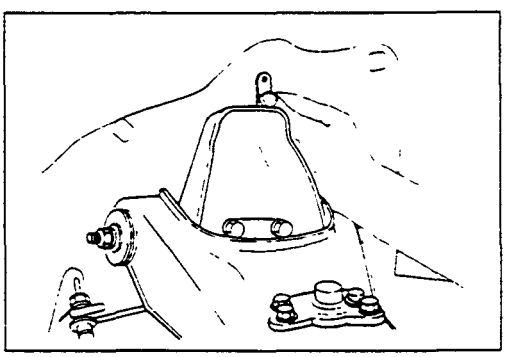

[4 x 4 Model]

The caster angle can be ajusted by means of the caster shims installed in position between the chassis frame and fulcrum pins.

Note:

Difference of the caster shim front/rear tickness shall be 3.2 mm (0.126 in) or less. Overall tickness of caster shim shall be 10.8 mm (0.425 in) or less.

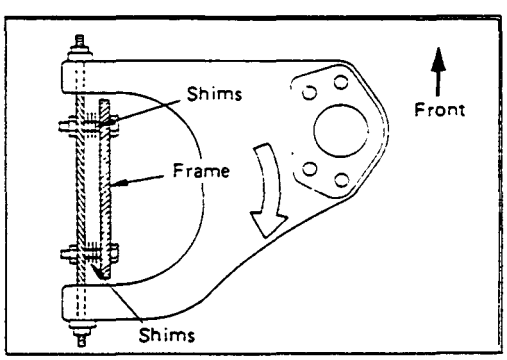

Position of shims		Caster angle
Front side	Rear Side	
When added	When removed	Decreases
When removed	When added	Increases

Fulcrum Pin Bolt Torque	kg•m(lb.ft/N•m)
15.5 ± 1.5 (112.1 ± 10.8/152.0 ± 14.7)	

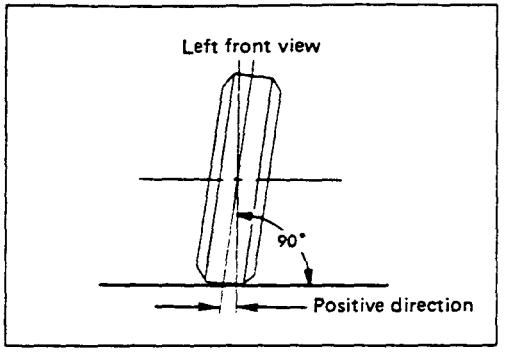

CAMBER

30′ ± 60′

Note:

Left and right side to be equal within 45′.

KING PIN INCLINATION

10° ± 60′

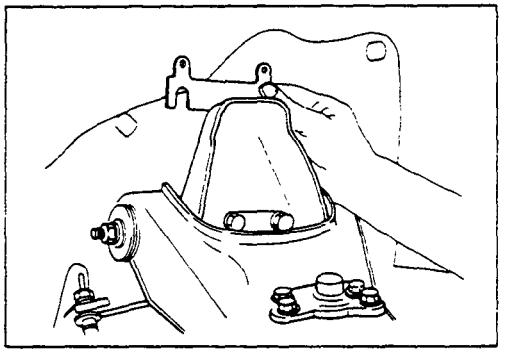

[4 x 4 Model Only]

The camber angle can be adjusted by means of the camber shims installed in position between the chassis frame and fulcrum pins.

Note:

Overall thickness of caster shim and chamber shim shall be 10.8 mm (0.425 in) or less.

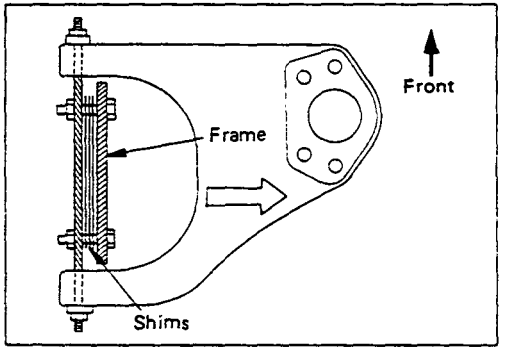

Position of shims	Camber angle
When added	Decreases
When removed	Increases

Fulcrum Pin Bolt Torque	kg·m(lb.ft/N·m)
15.5 ±1.5 (112.1 ±10.8/152.0 ±14.7)	

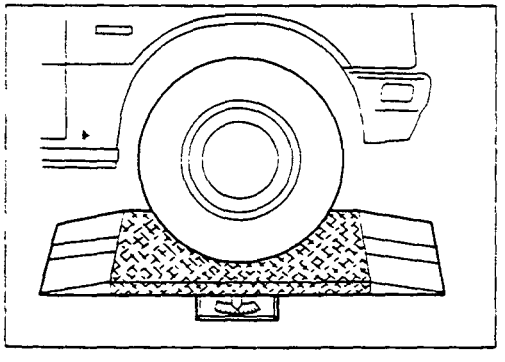

Measurement of Side Slippage

When inspection and adjustments of toe-in, camber, caster and kingpin inclination are completed, check for side slippage using a side slip tester.

Roll the wheels over the side tester as slowly as possible and take reading on the tester. If the amount of side slippage is in excess of 5 mm per 1 m, recheck the wheel alignment.

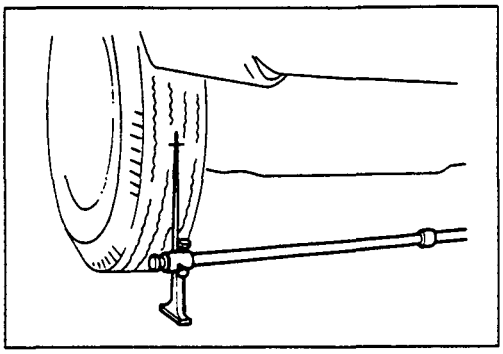

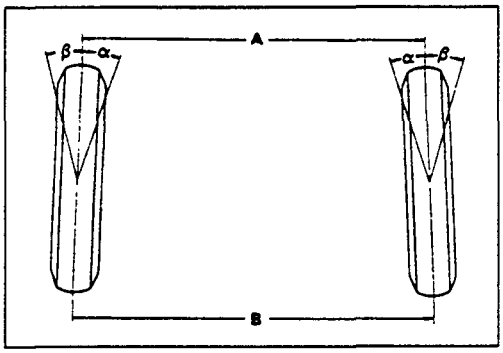

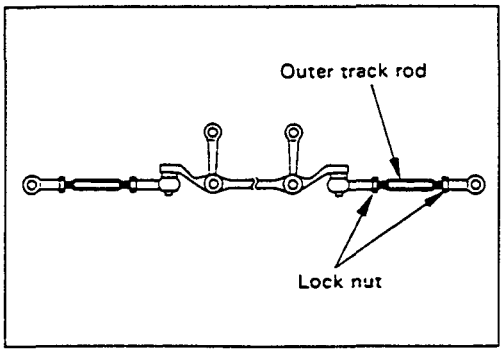

TOE-IN

Measurement should be taken with the vehicle on a surface plate.

If a surface plate is not available, toe-in should be checked with the vehicle parked on a level floor.

1. Set front wheels to straight ahead position.
2. Align the toe-in gauge with centre height of each wheel at front end.
3. Apply centre marks to each wheel, then take measurement of distance A between the centre marks on each wheel.
4. Slowly move the vehicle rearward until the centre marks reach the rear end position.
5. Take measurements of distance B between the centre marks at rear end.

The toe-in can be calculated with next formula.

Toe-in = B – A

Toe-in	mm(in).
4 x 2	2 ± 2 (0.08 ± 0.08)
4 x 4	2 ± 2 (0.08 ± 0.08)

To adjust the toe-in angle, loosen the lock nut on the outer track rod and turn the outer track rod with the same degree at right and left.

Lock Nut Torque	mm(in).
10.0 ± 1.0 (72.3 ± 7.2/98.1 ± 9.8)	

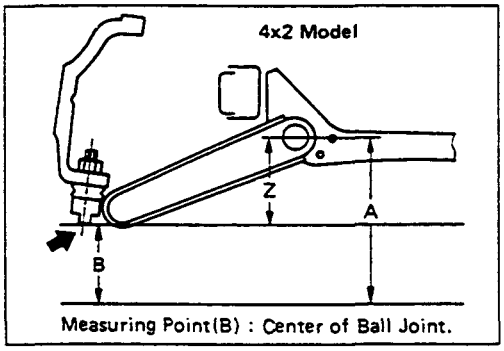

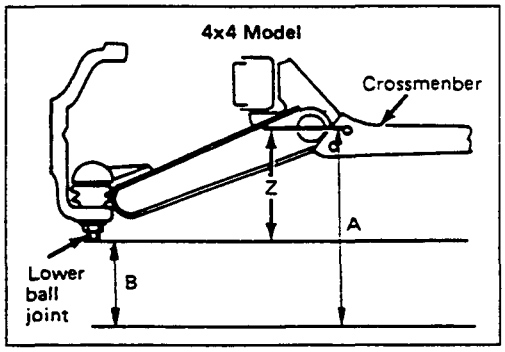

TRIM HEIGHT OR VEHICLE HEIGHT

Trim Height : at Curb Weight

Trim height (Z) = A — B

Front		mm(in).
	Model	Z
14" Wheels	4 x 2	56 (2.20)
15/16" Wheels	4 x 4	130 (5.12)
15" Wheels	4 x 2	68 (2.68)

Note:

Difference in trim height LHS to RHS should be within 3,0 mm.

Trim height and vehicle height measurements are interchangeable.

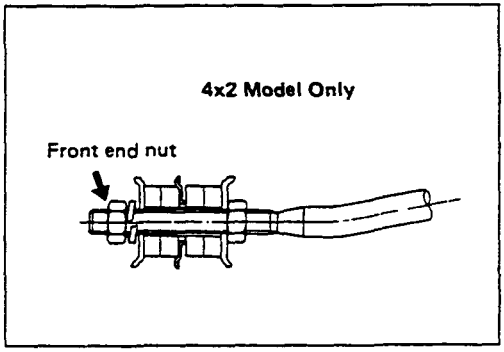

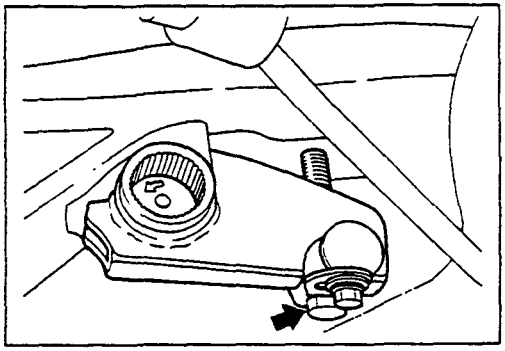

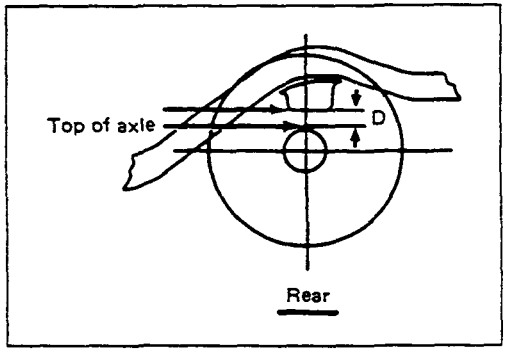

Adjustment

Adjust the trim height by means of the adjusting bolt on the height control arms.

1. Check and adjust the tyre inflation pressures.
2. Park the vehicle on a level ground and move the front of the vehicle up and down several times to settle the suspension.
3. Loosen the nuts on the front end of the strut bar. (For 4 x 2 model only.)
4. Make necessary adjustment with the adjusting bolt on the height control arms.

Reference Data mm(in).

	4 x 2	4 x 4	
		Others	Australia
Standard	90 (3.54)	95 (3.74)	95 (3.74)
Heavy Duty Sus.	90 (3.54)	95 (3.74)	—
Flat Deck	65 (2.56)	70 (2.76)	—

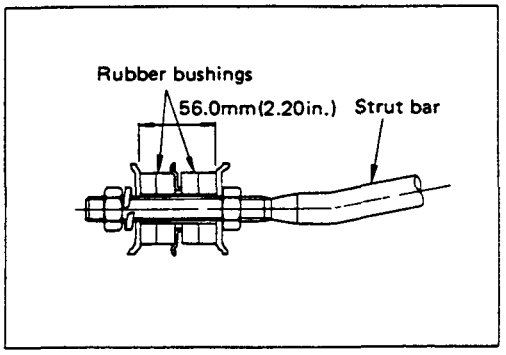

STRUT BAR

Securely Tighten the Strut Bar Nuts (4 x 2 Model Only)

Strut Bar Torque
13.0±1.3 (94.0±9.4/127.5±12.8)

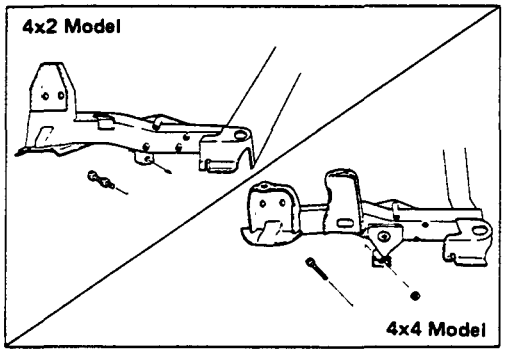

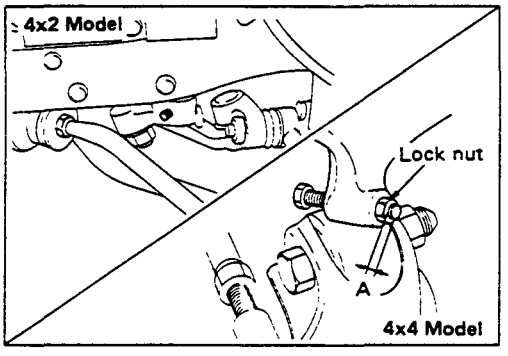

MAXIMUM STEERING ANGLE ADJUSTMENT

The maximum steering angle of the front wheels can be adjusted with the stopper bolts under the frame side members.

1. Position each front wheel on the turning radius gauge in a straight-ahead position.
2. Set the parking brake firmly.
3. Adjust the inside wheel angle of each side with the stopper bolts.
4. Similarly adjust the inside wheel angle of the other side with stopper bolt.

	4 x 2	4 x 4
Outside wheel	33°	33°
Inside wheel	37° $^{+0°}_{-2°}$	35° $^{+0°}_{-2°}$

Note:

Maximum steering angles should be set after adjusting front wheel alignment.

4 x 4 Model Only	mm(in)
A	0—8.5 (0—0.33)

Stopper Bolt Lock Nut Torque	kg·m(lb.ft/N·m)
4 x 2	4.5±1.0 (32.6±7.2/44.1±9.8)
4 x 4	2.3±0.3 (16.6±2.2/22.5±2.9)

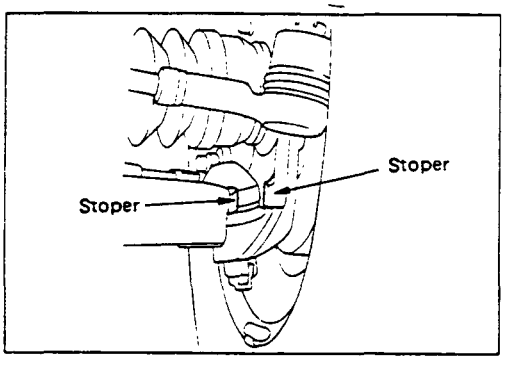

4 x 4 Model Only

If the stopper (non-adjustable) between the lower link end and the knuckle comes ahead of the stopper bolt, adjust the stopper bolt so that the inner-side stopper bolt touches the drop arm (relay lever).

DELTA OPEL ISUZU SUZUKI

Hi - Tech

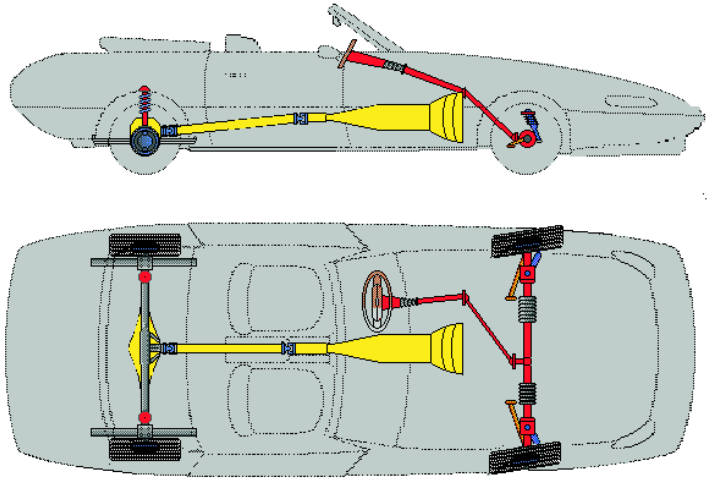

Index

Servicing

Specs.

Column

Unit

Power

Linkage

KB TF 140
Steering

ISUZU

SECTION 3B
STEERING

TABLE OF CONTENTS

PAGE

Main Data and Specifications ..... 3B— 3
Torque Specifications ..... 3B— 4
Standard Bolts ..... 3B— 4
Special Parts Fixing Nuts and Bolts ..... 3B— 5
Servicing ..... 3B— 9
Steering Mechanism ..... 3B—14
General Description ..... 3B—14
Steering Column ..... 3B—16
Removal and Installation ..... 3B—16
Steering Unit ..... 3B—21
General Description ..... 3B—21
Removal and Installation ..... 3B—24
Manual Steering Unit ..... 3B—26
Disassembly ..... 3B—26
Inspection and Repair ..... 3B—29
Reassembly ..... 3B—30
Power Steering Unit ..... 3B—33
Repair Kit ..... 3B—33
Disassembly ..... 3B—34
Inspection and Repair ..... 3B—36
Reassembly ..... 3B—37
Steering Linkage ..... 3B—40
General Description ..... 3B—40
Removal and Installation ..... 3B—41
Disassembly ..... 3B—43
Inspection and Repair ..... 3B—44
Reassembly ..... 3B—46

Power Steering Oil Pump 3B–48
General Description 3B–48
Repair Kit 3B–49
Removal and Installation 3B–50
Disassembly 3B–51
Inspection and Repair 3B–53
Reassembly 3B–54
Troubleshooting 3B–61

MAIN DATA AND SPECIFICATIONS

		Manual steering	Power steering
Unit type		Recirculating ball	Integral, ball screw
Gear ratio		20.5 – 23.5	15.2 : 1
Sector shaft operating angle	degree	95	94
Starting torque	kg·m (lb.ft)	0.065 – 0.11 (0.47 – 0.79)	0.06 – 0.09 (0.43 – 0.65)
Maximum oil pressure	kg/cm^2 (psi/kPa)	—	90 (1280 / 8826)
Oil pump type		—	Vane
Steering wheel – Diameter	mm (in.)	382 (15.04)	
Steering wheel – Free play	mm (in.)	10 – 30 (0.394 – 1.181)	10 (0.394)
Oil capacity	liters (US pint / UK pint)	0.4 (0.85 / 0.70) Gear oil GL-5 grade	1.0 (2.13 / 1.75) ATF

TORQUE SPECIFICATIONS

STANDARD BOLTS

The torque values given in the following table should be applied where a particular torque is not specified.

N·m (kg·m / lb·ft)

	Strength Class	4.8/4T	7T	8.8		9.8/9T
				Refined	Non-Refined	
	Bolt Identification	4	7	8	8	9
	Bolt Diameter× Pitch (mm)	No mark	—			
Standard Hex. Head Bolt	M6 × 1.0	6 (0.6 / 52 lb·in)	7 (0.7 / 61 lb·in)	8 (0.8 / 69 lb·in)		–
	M8 × 1.25	13 (1.3 / 113 lb·in)	17 (1.7 / 12)	20 (2.0 / 14)		24 (2.4 / 17)
	M10 × 1.25	27 (2.8 / 20)	37 (3.8 / 27)	42 (4.3 / 31)		50 (5.1 / 37)
	M12 × 1.25	61 (6.3 / 45)	76 (7.8 / 56)	87 (8.9 / 64)		95 (9.7 / 70)
	M14 × 1.5	96 (9.8 / 71)	116 (11.8 / 85)	133 (13.6 / 98)		142 (14.5 / 105)
	M16 × 1.5	130 (13.3 / 96)	170 (17.3 / 125)	193 (19.7 / 143)		200 (20.4 / 148)
	M18 × 1.5	188 (19.2 / 139)	244 (24.9 / 180)	278 (28.3 / 205)		287 (29.3 / 212)
	M20 × 1.5	258 (26.3 / 190)	337 (34.4 / 249)	385 (39.3 / 284)		396 (40.4 / 292)
	M22 × 1.5	332 (33.9 / 245)	453 (46.3 / 335)	517 (52.7 / 381)		530 (54.1 / 391)
	M24 × 2.0	449 (45.8 / 331)	570 (58.2 / 421)	651 (66.3 / 480)		692 (70.6 / 511)
	* M10 × 1.5	26 (2.7 / 20)	36 (3.7 / 27)	41 (4.2 / 30)		48 (4.9 / 35)
	* M12 × 1.75	57 (5.8 / 42)	71 (7.2 / 52)	80 (8.2 / 59)		89 (9.1 / 66)
	* M14 × 2.0	89 (9.1 / 66)	110 (11.2 / 81)	125 (12.7 / 92)		133 (13.6 / 98)
	* M16 × 2.0	124 (12.7 / 92)	162 (16.5 / 119)	185 (18.9 / 137)		191 (19.5 / 141)
Flange Bolt	M6 × 1.0	7 (0.7 / 61 lb·in)	8 (0.8 / 69 lb·in)	9 (0.9 / 78 lb·in)		–
	M8 × 1.25	15 (1.5 / 11)	19 (1.9 / 14)	22 (2.2 / 16)		26 (2.7 / 20)
	M10 × 1.25	31 (3.2 / 23)	41 (4.2 / 30)	47 (4.8 / 35)		56 (5.7 / 41)
	M12 × 1.25	69 (7.0 / 51)	85 (8.7 / 63)	97 (9.9 / 72)		106 (10.8 / 78)
	M14 × 1.5	104 (10.6 / 77)	126 (12.8 / 93)	144 (14.6 / 106)		154 (15.7 / 114)
	M16 × 1.5	145 (14.8 / 127)	188 (19.2 / 139)	214 (21.8 / 158)		221 (22.5 / 163)
	M18 × 1.5	–	–	–		–
	M20 × 1.5	–	–	–		–
	M22 × 1.5	–	–	–		–
	M24 × 2.0	–	–	–		–
	* M10 × 1.5	30 (3.1 / 22)	40 (4.1 / 30)	46 (4.7 / 34)		54 (5.5 / 40)
	* M12 × 1.75	64 (6.5 / 47)	78 (8.0 / 58)	89 (9.1 / 66)		99 (10.1 / 73)
	* M14 × 2.0	97 (9.9 / 72)	119 (12.1 / 88)	135 (13.8 / 99.7)		144 (14.7 / 107)
	* M16 × 2.0	137 (14.0 / 101)	178 (18.2 / 132)	203 (20.7 / 150)		210 (21.5 / 155)

The asterisk * indicates that the bolts are used for female-threaded parts that are made of soft materials such as casting, etc.

FLARE NUTS

N·m (kg·m / lb·ft)

Pipe diameter mm (in)	Torque	Pipe diameter mm (in)	Torque
4.76 (0.187)	16 (1.6 / 12)	10.00 (0.394)	54 (5.5 / 40)
6.35 (0.250)	26 (2.7 / 20)	12.00 (0.472)	88 (9.0 / 65)
8.00 (0.315)	44 (4.5 / 33)	15.00 (0.591)	106 (10.8 / 78)

SPECIAL PARTS FIXING NUTS AND BOLTS

STEERING COLUMN

kg·m(lb.ft/N·m)

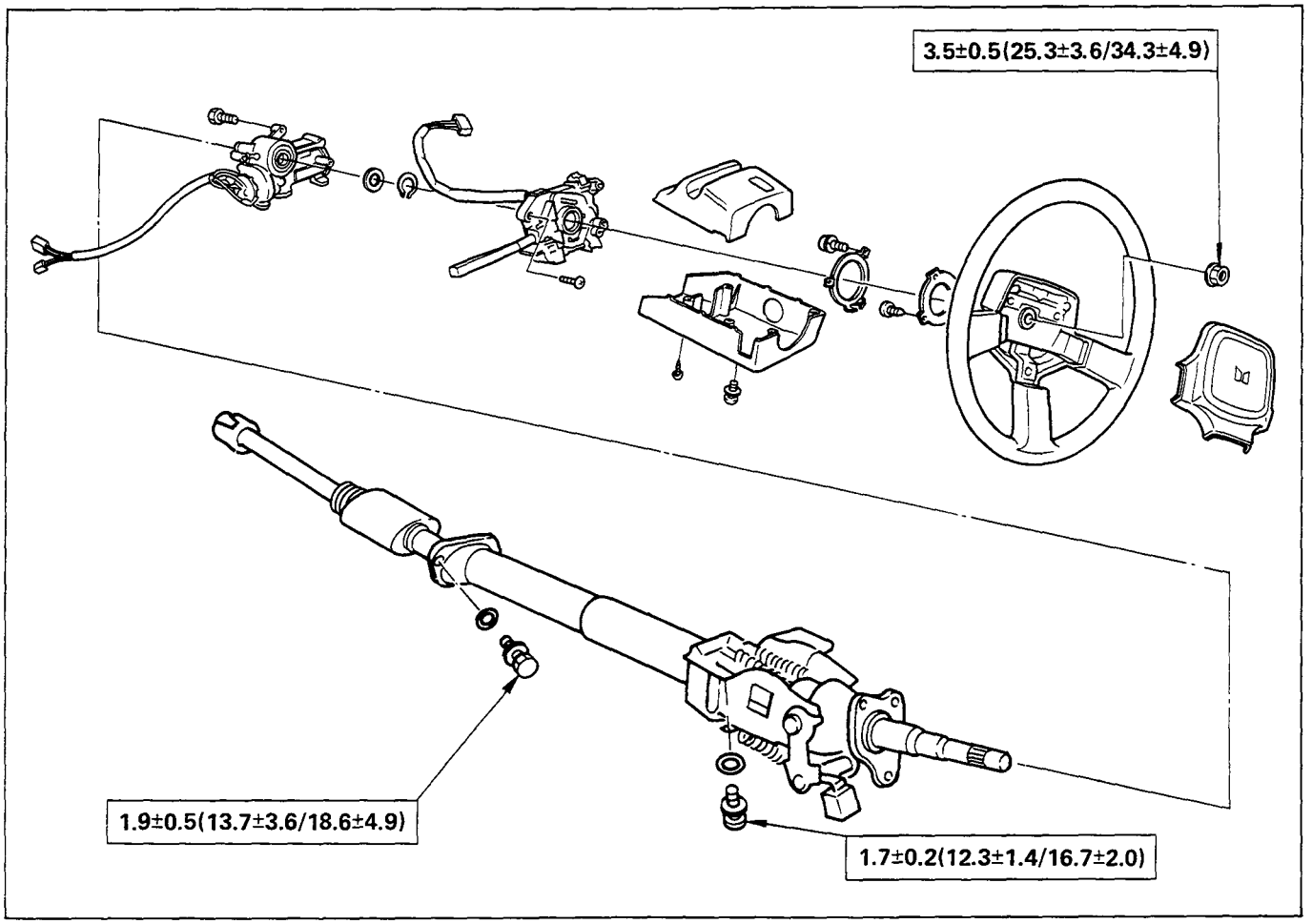

STEERING UNIT

kg·m(lb.ft/N·m)

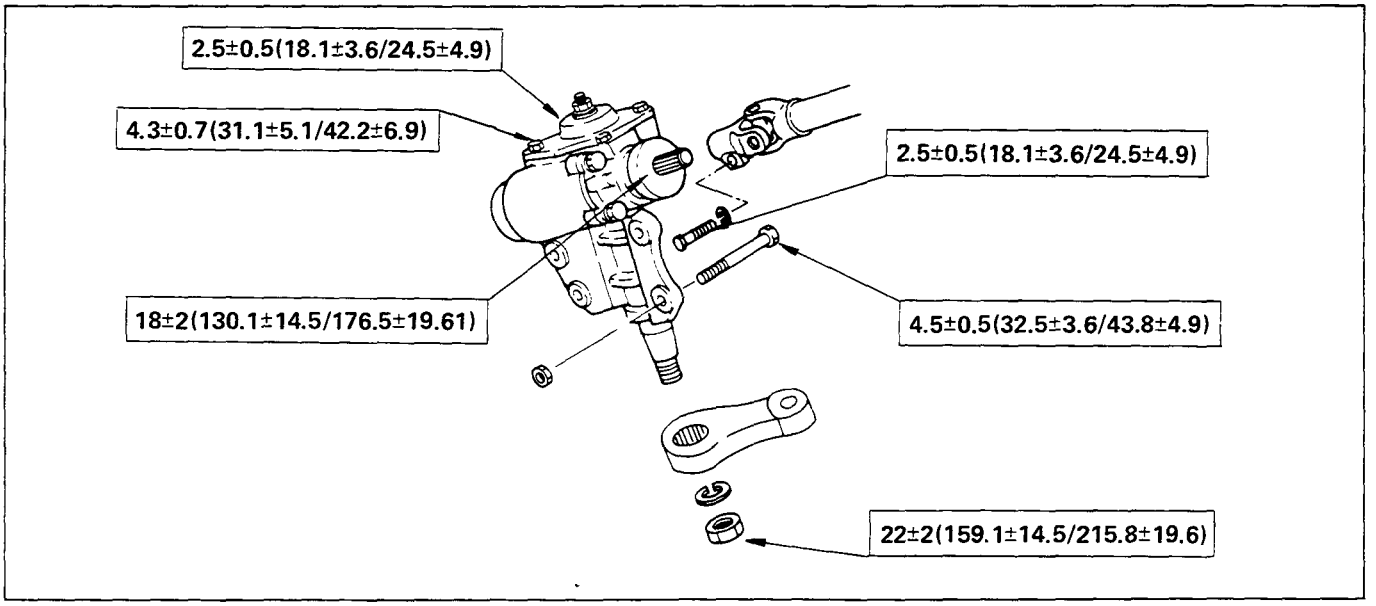

POWER STEERING UNIT

kg·m(lb.ft/N·m)

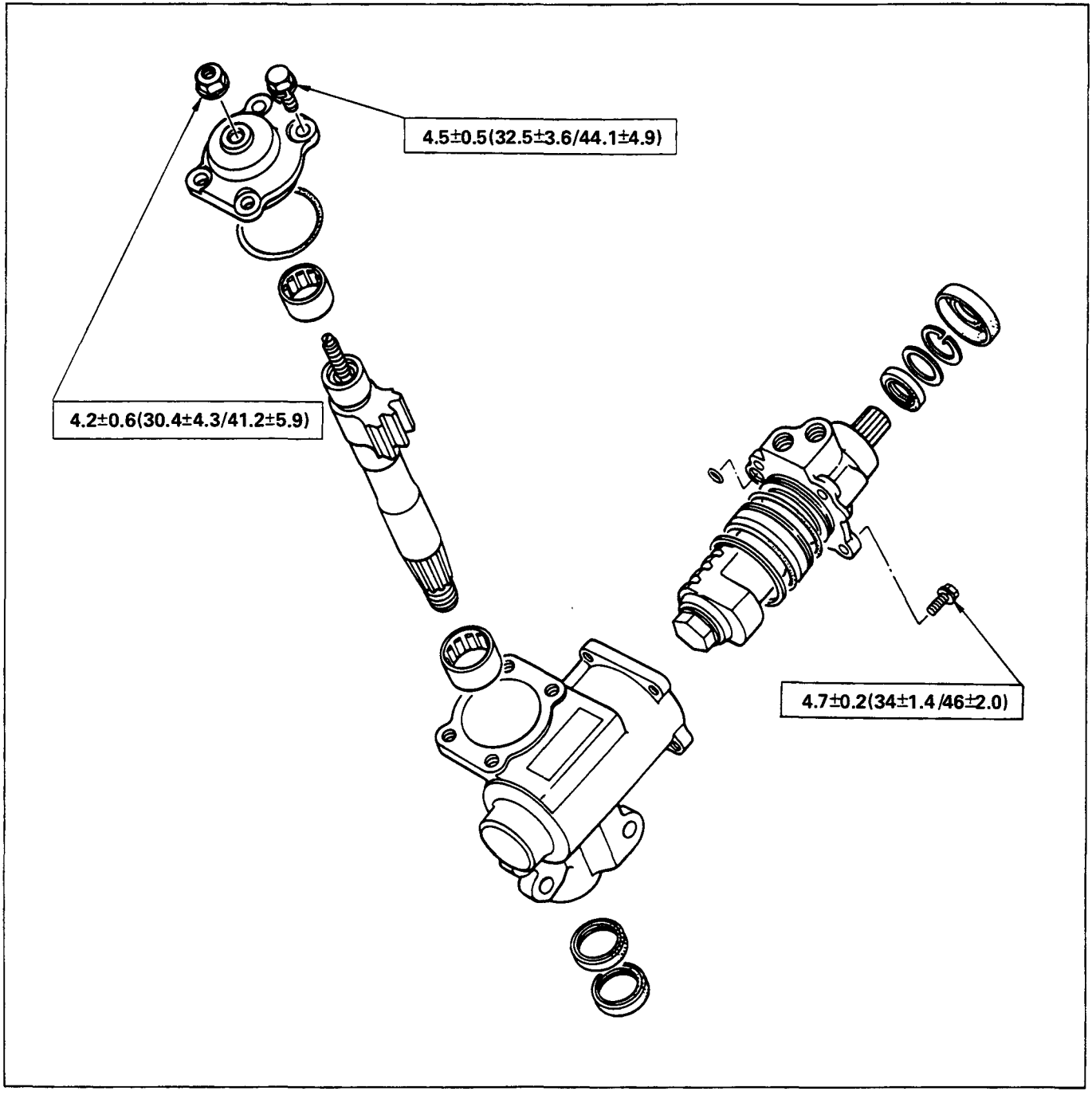

POWER STEERING HYDRAULIC LINE

kg·m(lb.ft/N·m)

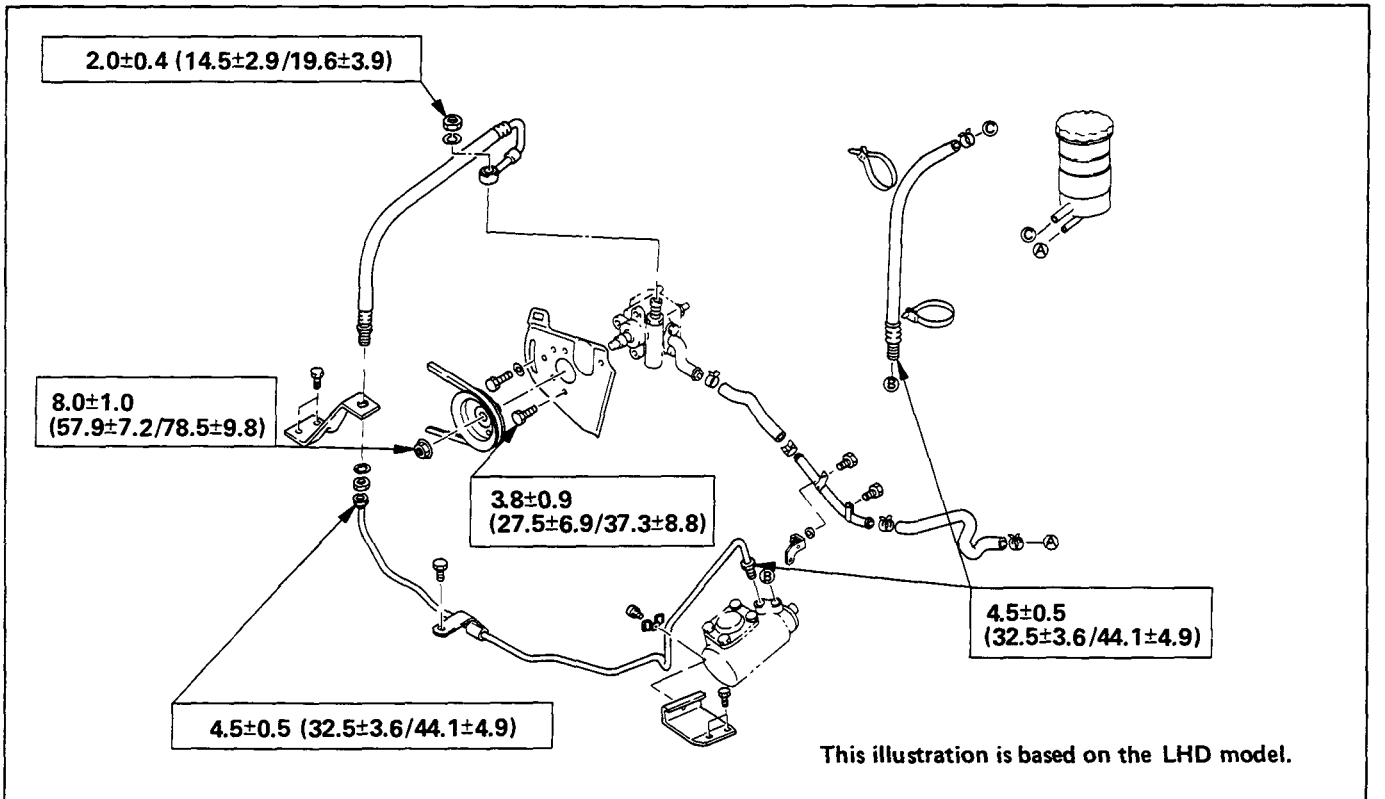

STEERING LINKAGE

kg·m(lb.ft/N·m)

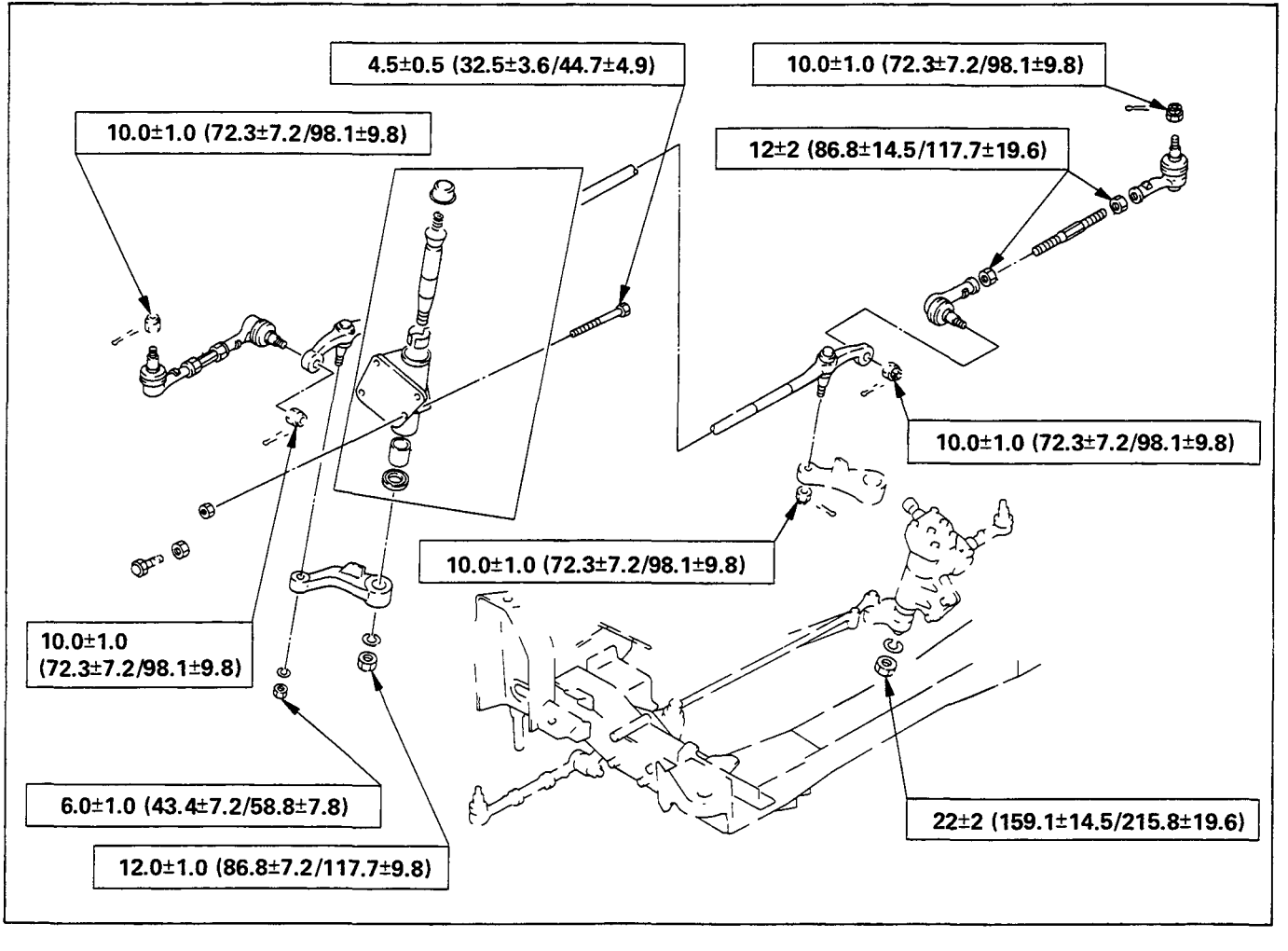

SERVICING

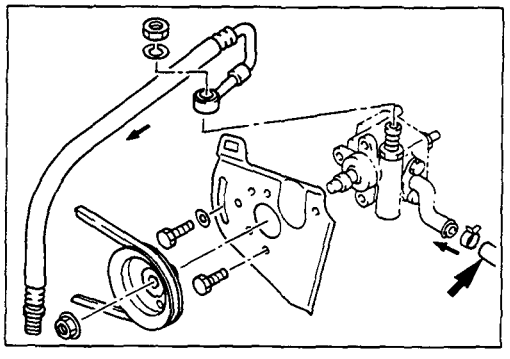

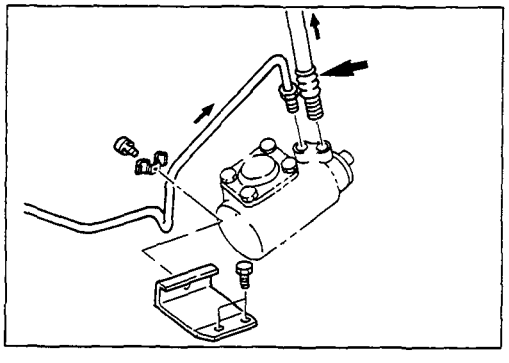

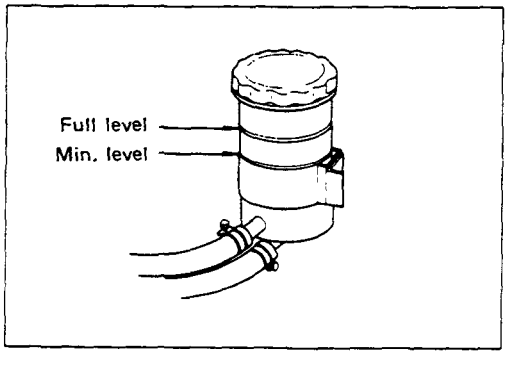

POWER STEERING FLUID

Draining

1. Jack up the front wheels until they are clear of the ground.
2. Disconnect the fluid pipes between the steering unit and the fluid reservoir, and the fluid hose between the pump and the fluid reservoir.
3. When draining is completed, remove remaining fluid within hydraulic system by turning the steering wheel to stop in both directions several times.

Refilling

1. Connect the fluid lines securely and fill the fluid reservoir with specified automatic transmission fluid.
2. When the fluid reservoir is filled to the specified level, allow 2 or 3 minutes. While refilling, keep fluid reservoir replenished as necessary to prevent air from entering the hydraulic system.
3. Lower the front wheels to the ground. Start and let the engine idle for a few minutes.
   Recheck the fluid level and replenish if necessary.

Fluid Capacity	Liter(US pint/UK pint)
Approx. 1.0 (2.13/1.75)	

- Automatic transmission fluid (DEXRON®)

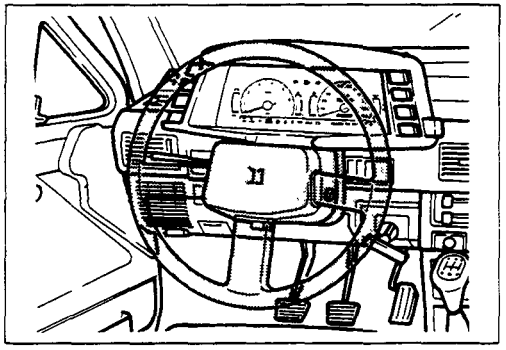

STEERING WHEEL PLAY

Inspection

1. Check the amount of the steering wheel play by turning the wheel in both directions until the tires begin to move with the front wheels properly in the straightahead position.

Note:

If the vehicle is equipped with a power steering unit, the wheel free play should be checked with the engine running.

Free Play	mm(in)
Manual Steering	10—30 (0.4—1.2)
Power Steering	10 (0.4)

2. Also check the steering wheel for play and looseness in mount by moving it back and forth and sideways. While driving check for hard-steering, steering shimmy and tendency of steering to pull to one side.

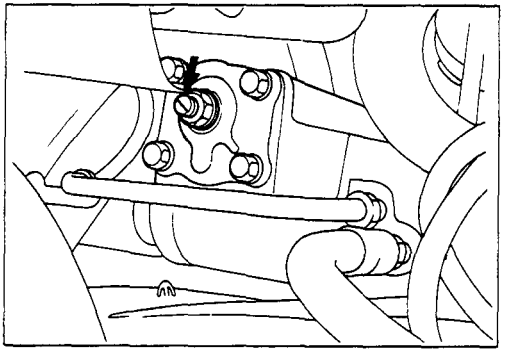

Adjustment

1. Align the front wheels properly in the straight ahead position.
2. Loosen the lock nut on the adjusting screw of the steering unit.
3. Turn the adjust screw clockwise to decrease free play or counter-clockwise to increase.
4. After check of specified free play, tighten the lock nut to specified torque.

Lock Nut Torque	kg·m(lb.ft/N·m)
Manual Steering	2.5 ±0.5 (18.1 ±3.6/24.5 ±4.9)
Power Steering	4.2 ±0.6 (30.4 ±4.3/41.2 ±5.9)

AIR BLEEDING

Fill fluid reservoir with specified automatic transmission fluid (DEXRON) and turn the steering wheel to lock in both directions repeatedly, so that level of fluid in the reservoir lowers.
Fill to bring the level of fluid in the reservoir to the specified level and start the engine.
Perform the following check with the engine running at idle.
Bleeding is considered to be completed if the following conditions apply ;

(1) Turn the steering wheel to lock in both directions 3 or 4 times.
A buzz is not produced in the hydraulic line.
(2) Stop the engine with steering wheel in a straight-ahead position.
Level of fluid in reservoir does not increase.

Note:

Do not hold the steering wheel in position of lock for more than 5 seconds, or temperature of fluid increases sharply.

MEASUREMENT OF FLUID PRESSURE

Measurement of fluid pressure in the power steering system is performed to determine whether or not the oil pump and power steering unit are functioning normally.

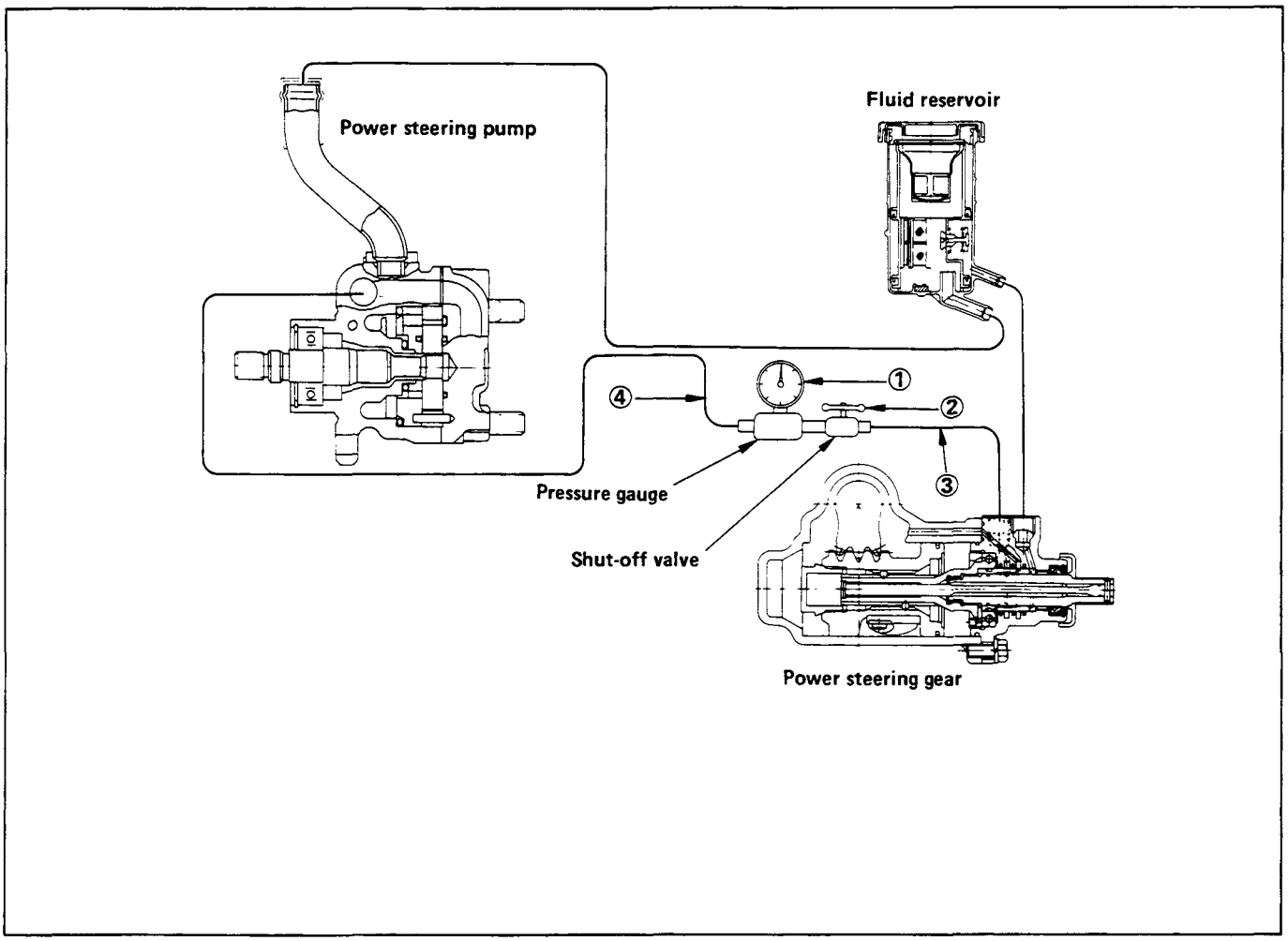

1. Installation of Tester

- Power Steering Tester : 5-8840-0135-0 (J-29877-A)
  Adapter ; Power Steering Tester : 5-8840-0136-0 (J-33996)

  ① Oil Pressure Gauge with Shut Off Valve
  ② Shut off Valve
  ③ Adapter (to steering unit)
  ④ Adapter (to oil pump)

- Installation Procedure ;

  Disconnect the hose on the outlet side of the pump. Connect the gauge hose closest to the power steering gauge shut off valve to the hose on the vehicle. Connect the gauge hose furthest from the shut off valve to the outlet side of the power steering pump.

2 **Bleeding**
- Open stop valve fully.
- Refer to air bleeding procedure.

3. **Measurement of Fluid Pressure**
- Open stop valve fully.
- Increase engine speed to 1500 rpm.
- Measure the fluid pressure when the steering wheel is turned to lock in both directions.

Fluid Pressure	kg/cm²(psi/kPa)
85 – 90 (1209 – 1280/8336 – 8826)	

Diagnosis :

(1) When pressure is higher than Specified pressure, the valve within the oil pump is defective.

(2) When the pressure is lower than Specified pressure.
- Return steering wheel to straight-ahead position.
- Close stop valve completely.
- Hold engine running at 1500 rpm, and take reading of the pressure gauge.

Fluid Pressure	kg/cm²(psi/kPa)
	Possible trouble
85 – 90 (1209 – 1208/8336 – 8826)	Steering unit
Lower than 85 (1209/8336)	Oil pump

STEERING MECHANISM

GENERAL DESCRIPTION

STEERING MECHANISM

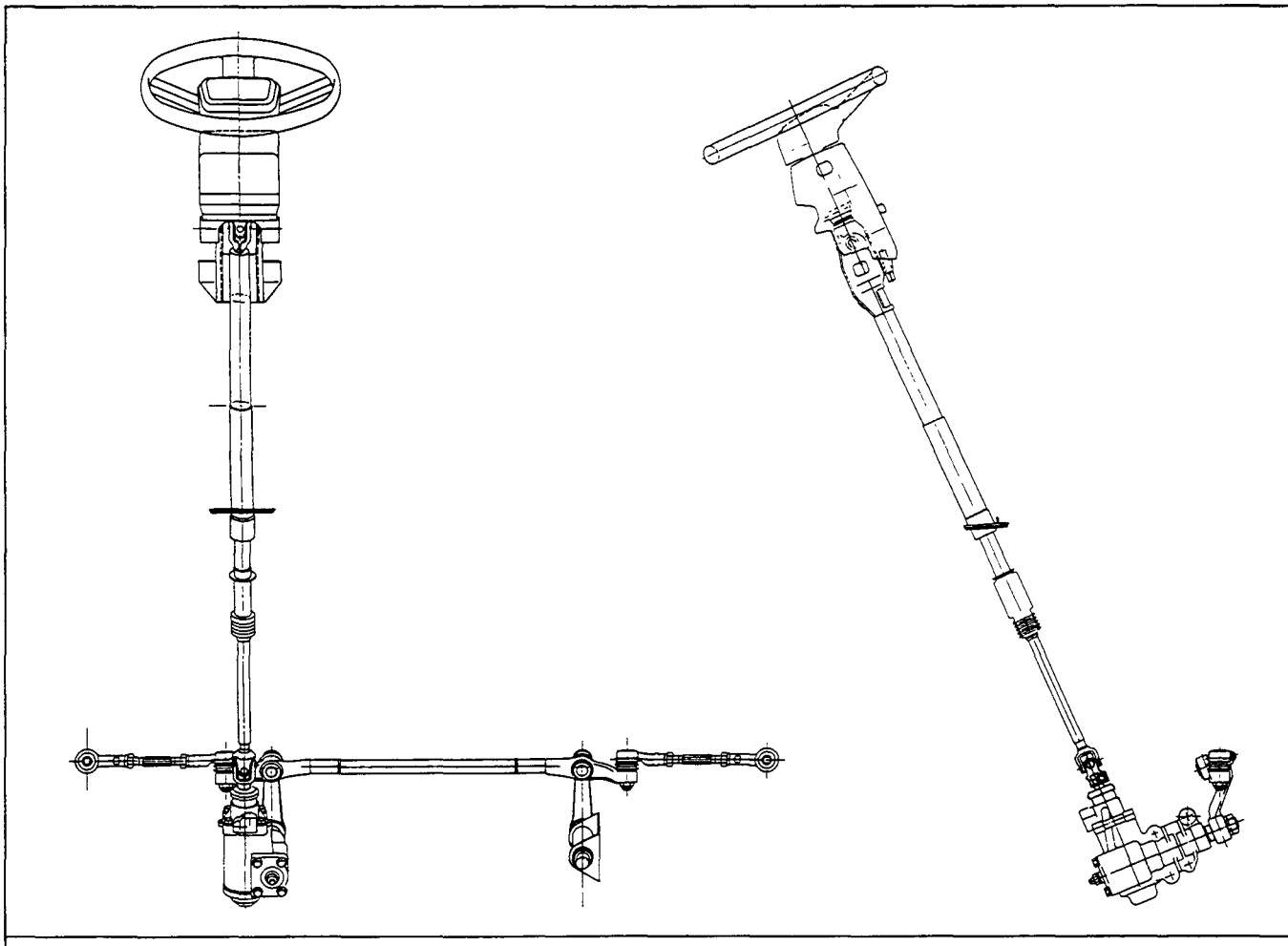

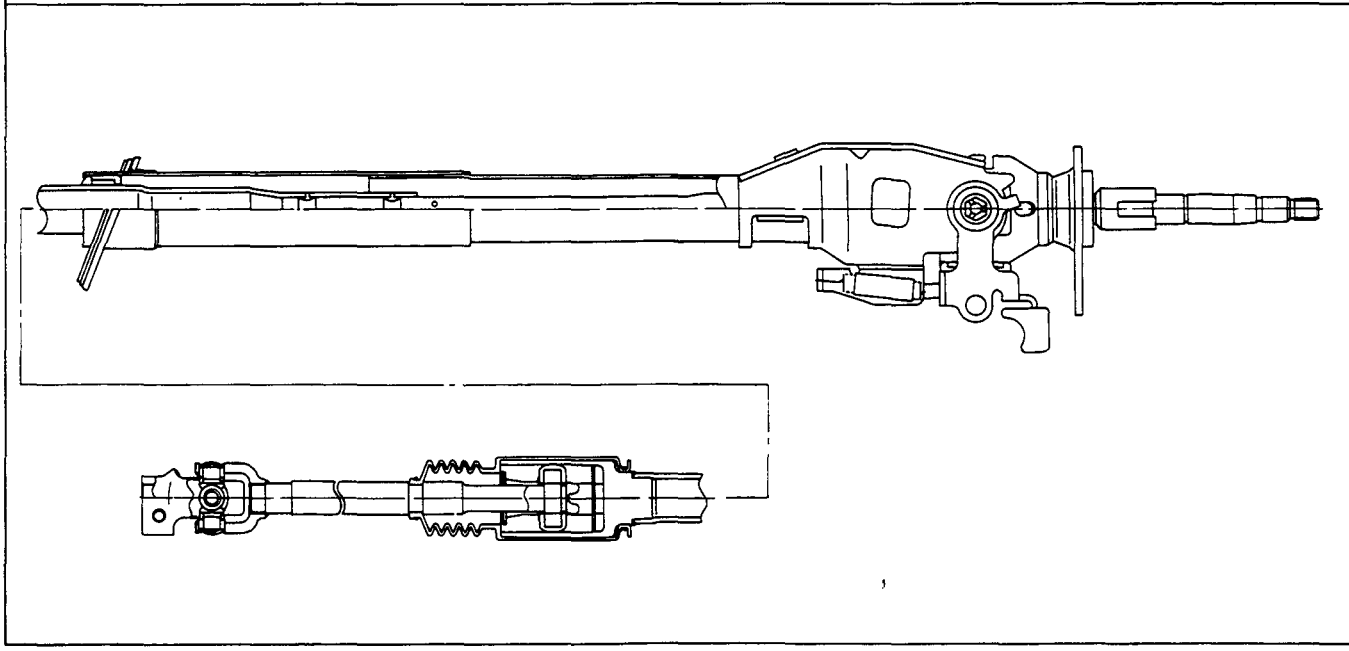

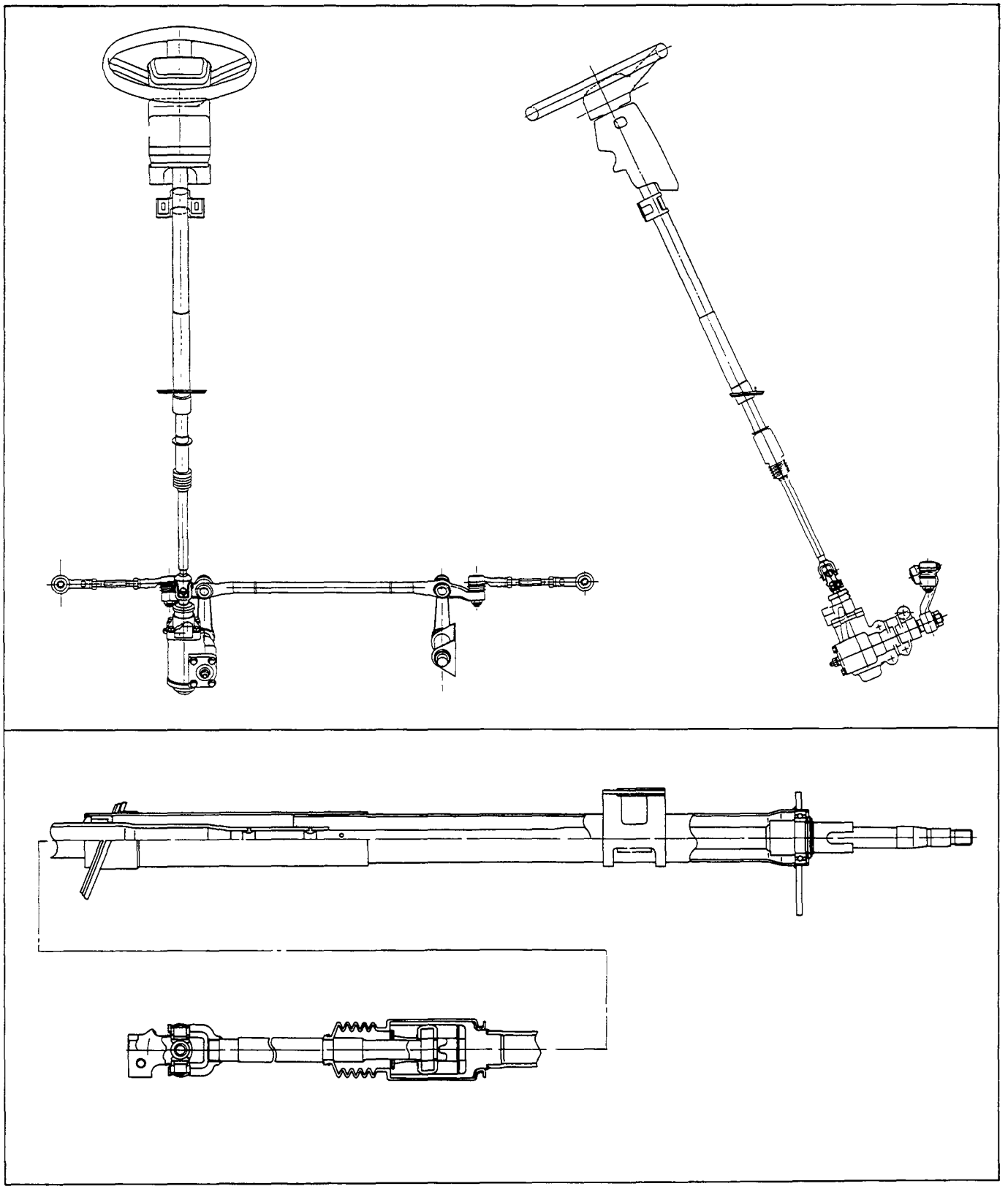

The steering mechanism comprises a steering wheel, steering column, steering shaft, steering unit, and steering linkage.
The steering shaft is equipped with slid joints to prevent vehicle vibration from transferring to the steering wheel.

STEERING COLUMN

REMOVAL AND INSTALLATION

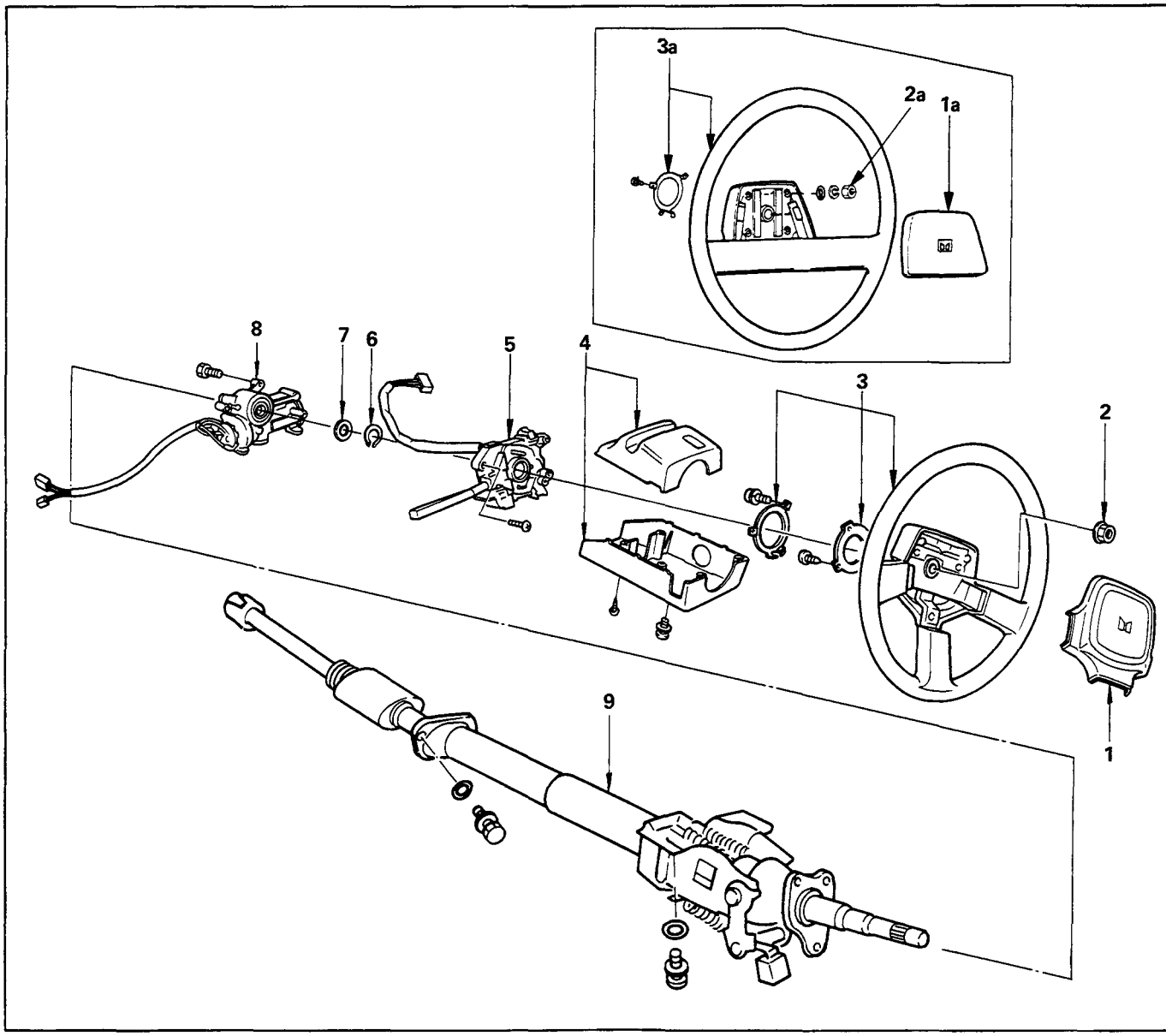

Removal Steps

- ▲ 1. Horn shroud
- 2. Nut
- ▲ 3. Steering wheel
- 4. Steering cowl
- 5. Combination switch
- 6. Snap ring
- 7. Bushing
- ▲ 8. Steering lock and bearing
- ▲ 9. Steering column assembly

Installation Steps

- ▲ 9. Steering column assembly
- ▲ 8. Steering lock and bearing
- 7. Bushing
- 6. Snap ring
- 5. Combination switch
- 4. Steering cowl
- ▲ 3. Steering wheel
- ▲ 2. Nut
- ▲ 1. Horn shroud

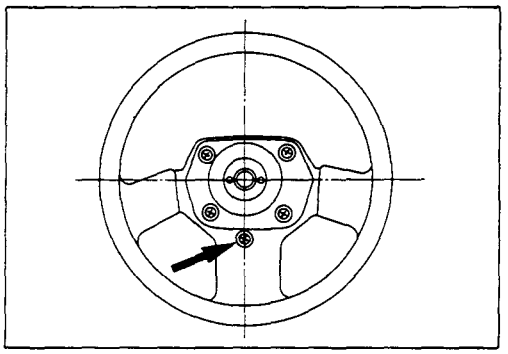

Important Operations — Removal

1. Horn Shroud

(1) Remove the arrowed screw at the rear side of the steering wheel.

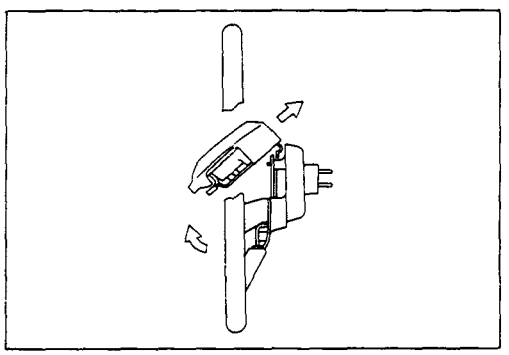

(2) Pull up the pad along the direction shown in the left figure and remove from the steering wheel.

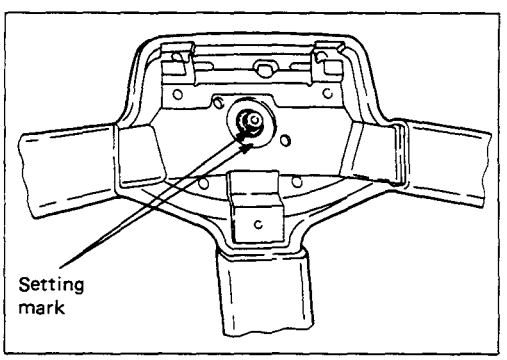

3., 3a. Steering Wheel

(1) Apply a setting mark across the steering wheel and shaft so parts can be reassembled in their original position.

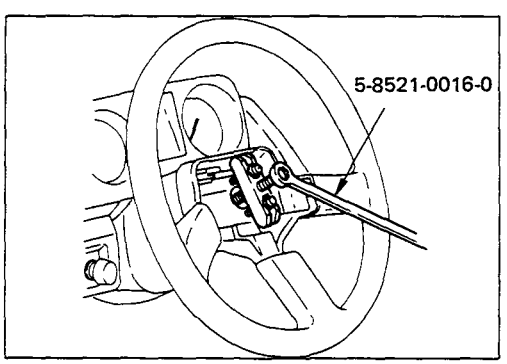

(2) Steering Wheel Puller : 5-8521-0016-0
(J-29752)

Note:

Never apply blow to the setting wheel in direction of the shaft by using a hammer or other impact tools in an attempt to remove the steering wheel, the setting shaft is designed as an energy absorbing unit.

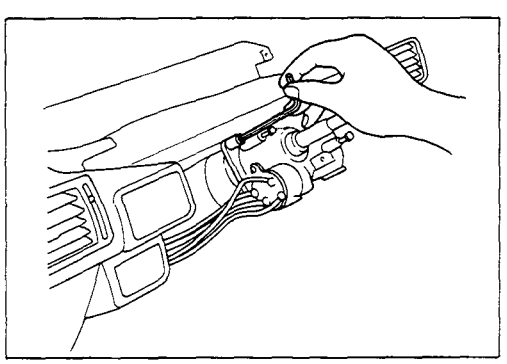

8. Steering Lock and Bearing

Remove the steering lock assembly using the inner hex wrench.

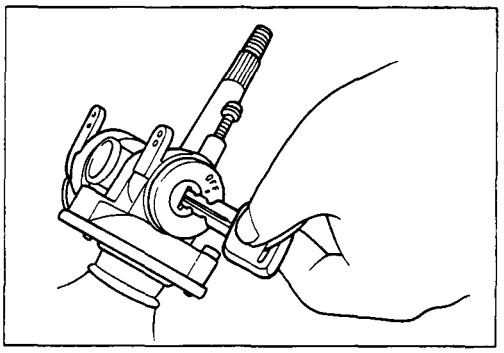

Turn the ignition key to OFF position.

Note:

With the steering in lock position, the steering lock assembly cannot be removed.

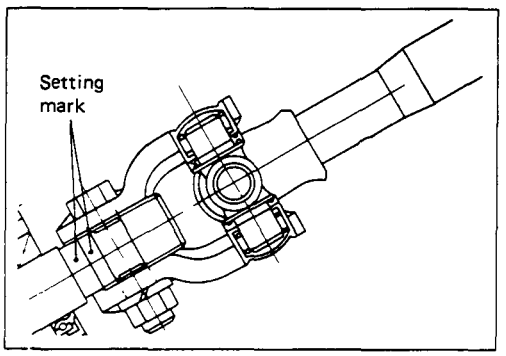

9. Steering Column Assembly

Apply a setting mark across the universal joint and steering shaft to reassemble of the parts in their original position.

Note:

A mating mark can be easily punched if the shaft is withdrawn a little by loosening the steering shaft universal joint.

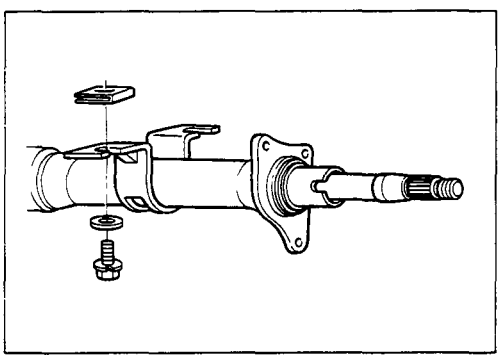

Important Operations — Installation

9. Steering Column Assembly

Steering Column Torque	kg·m(lb.ft/N·m)
1.7 ±0.2 (12.3 ±1.4/16.7 ±2.0)	

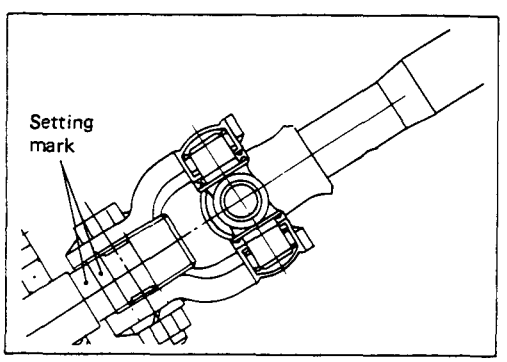

Align the setting marks made when removing.

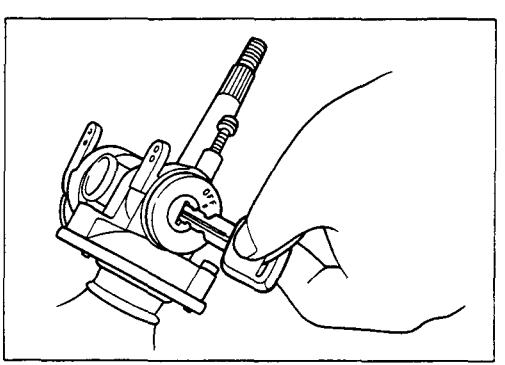

8. Steering Lock and Bearing

Turn the ignition key to OFF position.
With the steering in lock position, the steering lock assembly cannot be installed.

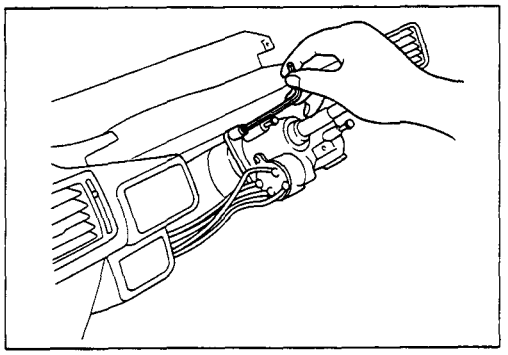

Install the steering lock assembly using the inner hex wrench.

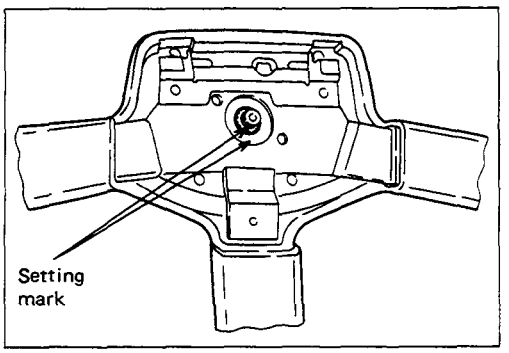

3., 3a. Steering Wheel

(1) Align the setting marks made when removing.
(2) Apply grease to contact ring.

Note:

Never apply blow to the setting wheel in direction of the shaft by using a hammer or other impact tools in an attempt to install the steering wheel, the setting shaft is designed as an energy absorbing unit.

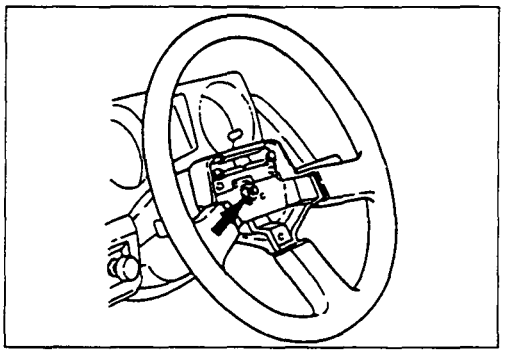

2., 2a. Nut

Steering Wheel Nut Torque	kg·m(lb.ft/N·m)
3.5 ±0.5 (25.3 ±3.6/34.3 ±4.9)	

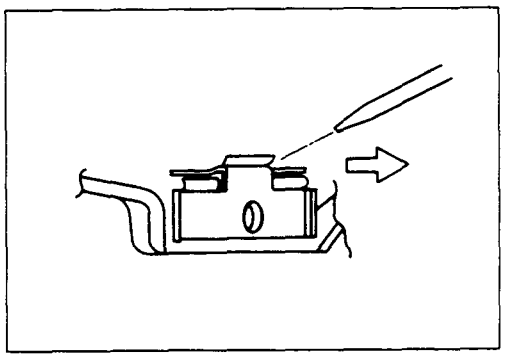

1. Horn Shroud

(1) Remove the bracket from the nail at the lower side of pad assembly with a screw driver.

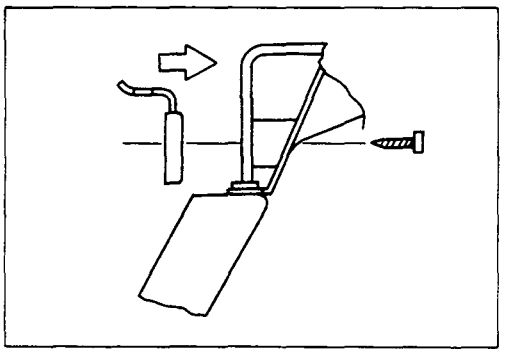

(2) Install the bracket (removed at procedure 1) onto the steering wheel sub assembly with a screw.

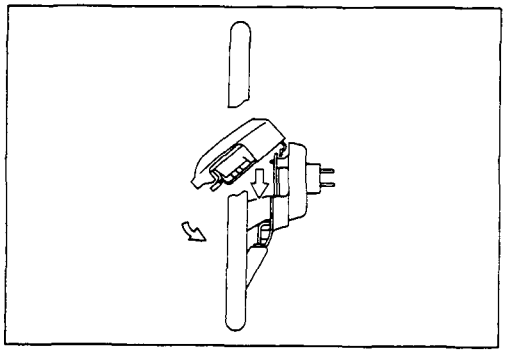

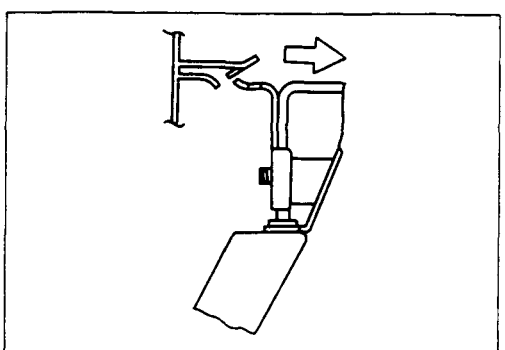

(3) Connect the harnesses, then, hang the nail of the pad assembly onto the plate of the steering wheel sub assembly, and install the pad carefully so that the nail is not separated from the bracket. (See the lowest figure.)

STEERING UNIT

GENERAL DESCRIPTION

MANUAL STEERING UNIT

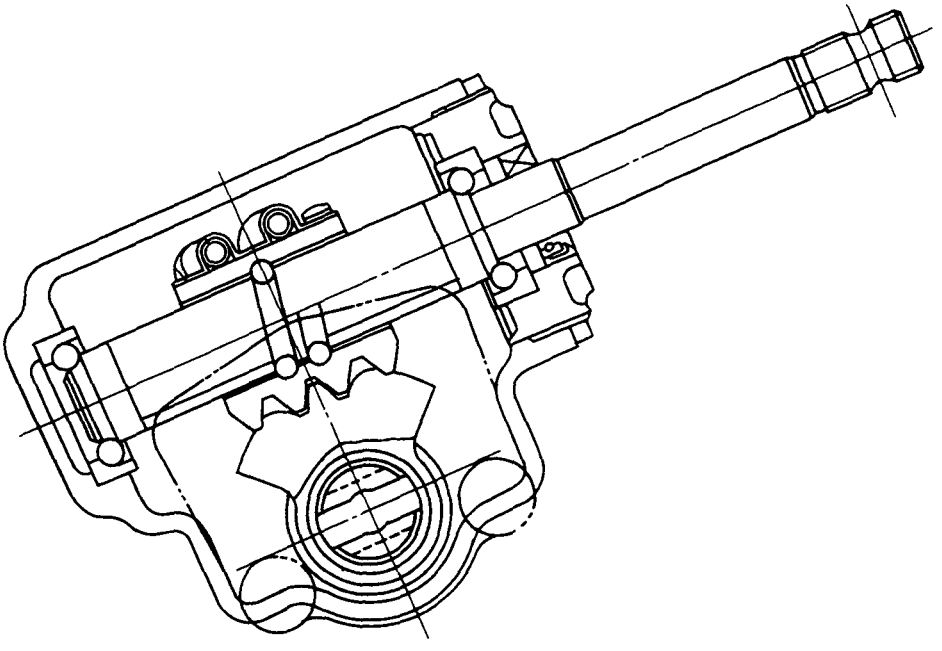

The steering gear is mainly comprised of the sector gear and the worm nut assembly.

There are many recirculating balls installed to the ball groove (way) between the worm nut and the steering worm shaft.

The steering gear's high mechanical efficiency provides very light steering.

Racks machined into the worm nut side face engage the fan shaped sector gear to transfer the steering wheel applied torque to the pitman arm.

POWER STEERING UNIT

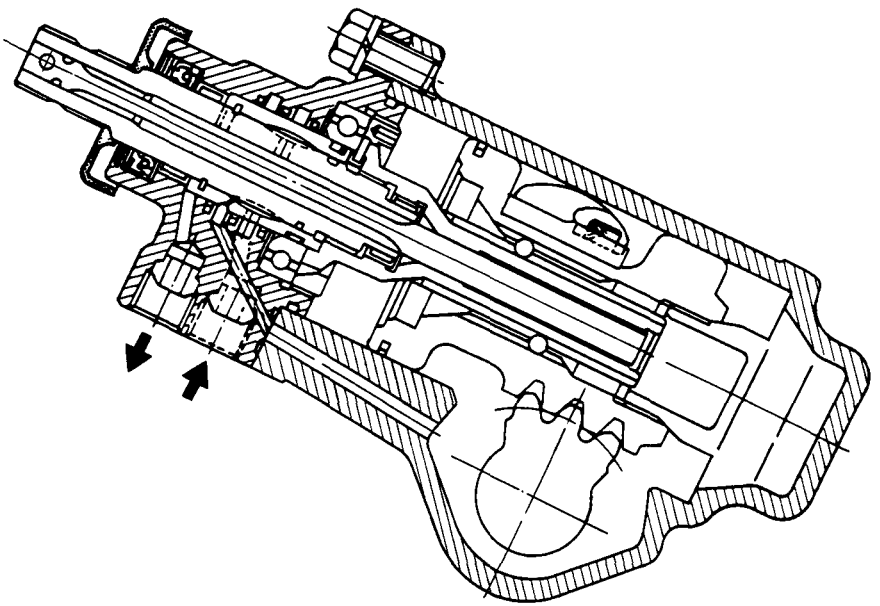

Power steering is designed to reduce the steering wheel turning effort by utilizing hydraulic pressure to bolster the normal torque developed by the steering wheel box.

The power steering unit incorporates a power piston and sector shaft as an integral part of the steering gear. A control valve is built into the steering housing.

Because the tire rolling resistance is constantly applied to the worm shaft, the torsion bar twists with the Steering Wheel. As the torsion bar twists, the relative torque displacement between the worm shaft and the rotor changes. An equivalent oil pressure is applied to the piston to bolster the normal torque.

POWER STEERING HYDRAULIC LINE

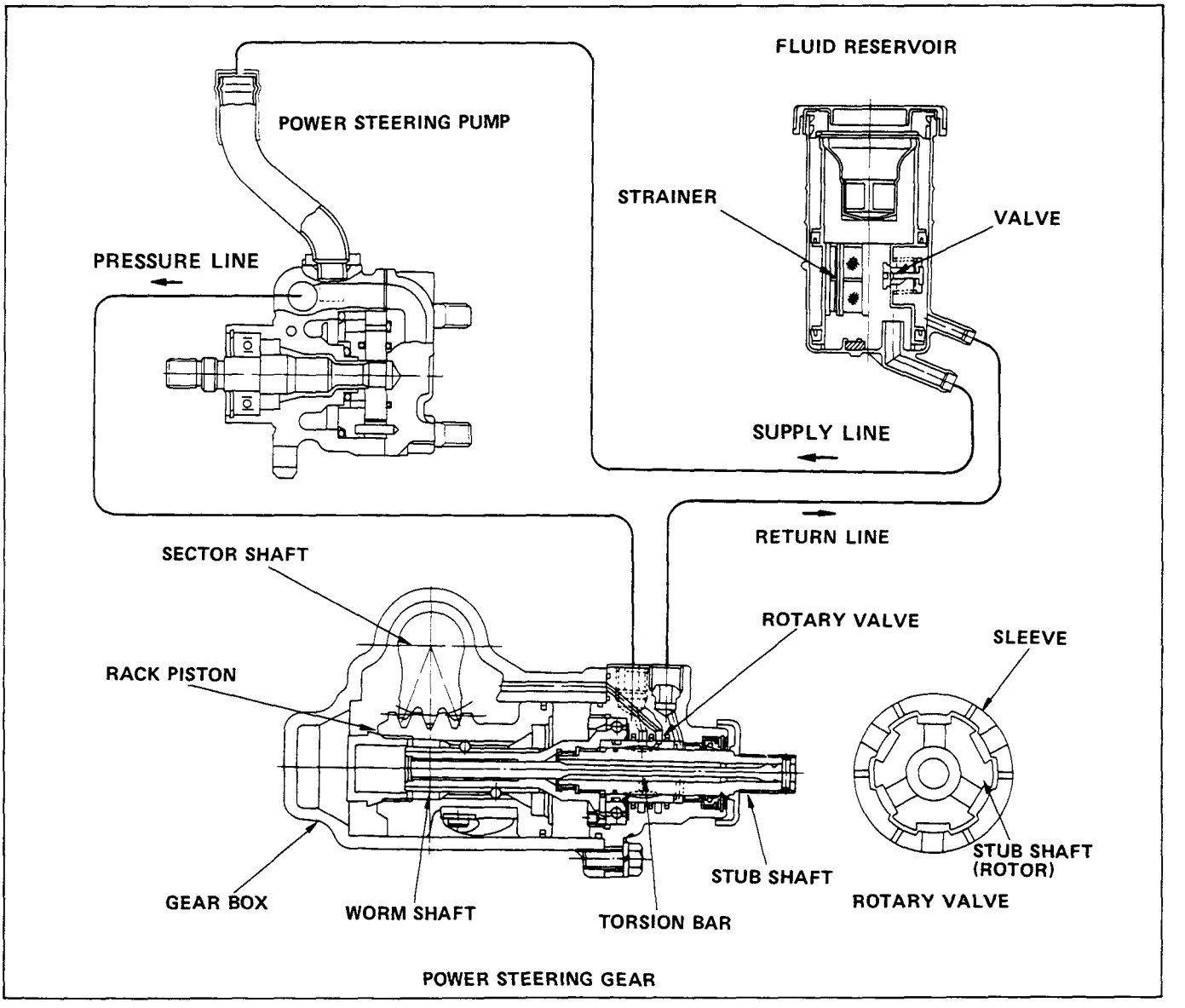

The function of each major component is described below:

Power Steering Unit

Refer to the previous page.

Oil Pump

The oil pump uses the power of the engine to send hydraulic fluid to the power steering unit.
An oil pressure relief valve and an oil flow relief valve are installed to the oil pump.
The oil pressure relief valve prevents any excessive oil pressure from reaching the hydraulic circuit.
The oil flow control valve controls the hydraulic fluid volume within the hydraulic system. It prevents too much fluid from entering the system. This, in turn, prevents harmful heat build-up.

Oil Reservoir and Piping

The oil reservoir stores and filters the hydraulic fluid.

REMOVAL AND INSTALLATION

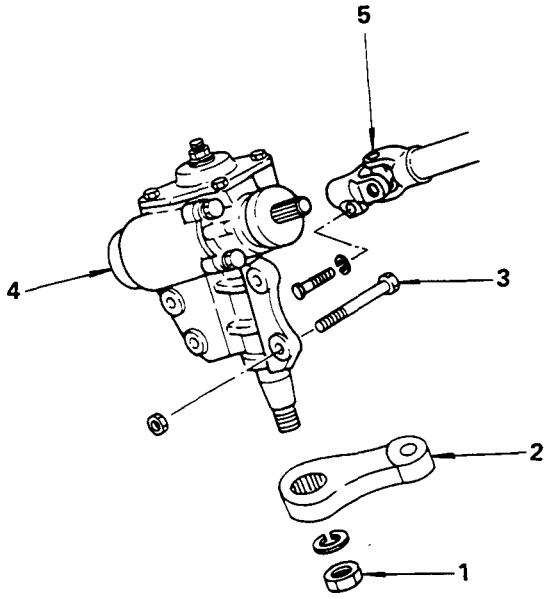

Removal Steps

1. Nut
▲ 2. Pitman arm
3. Bolt
4. Unit assembly
▲ 5. Coupling assembly

Installation Steps

▲ 5. Coupling assembly
4. Unit assembly
▲ 3. Bolt
▲ 2. Pitman arm
▲ 1. Nut

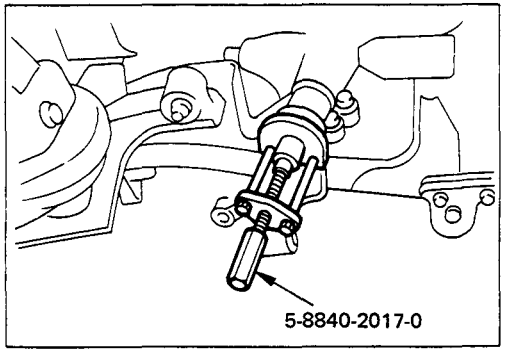

Important Operations — Removal

2. Pitman Arm

Pitman Arm Remover : 5-8840-2017-0

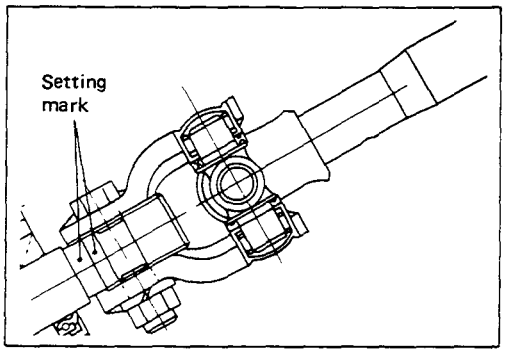

5. Coupling Assembly

Make a setting mark across the coupling flange and worm shaft to ensure reassembly of the parts in the original position.

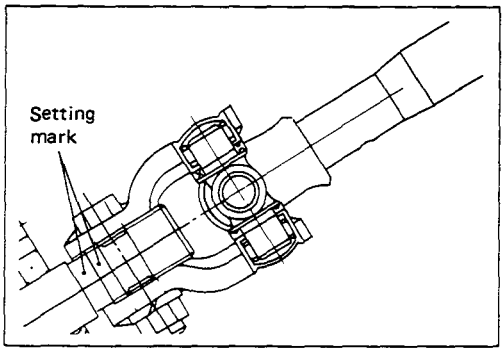

Important Operations — Installation

5. Coupling Assembly

Align the setting mark made at removal

3. Bolt

Steering Unit Bolt	kg·m(lb.ft/N·m)
4.5 ±0.5 (32.5 ±3.6/44.1 ±4.9)	

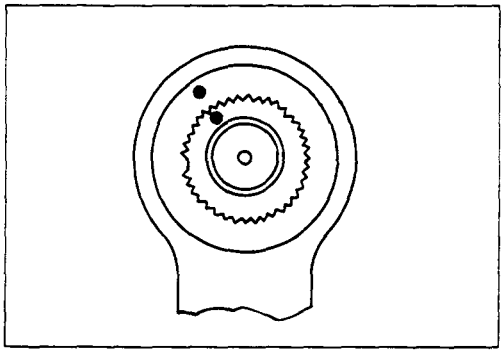

2. Pitman Arm

Align the notched tooth

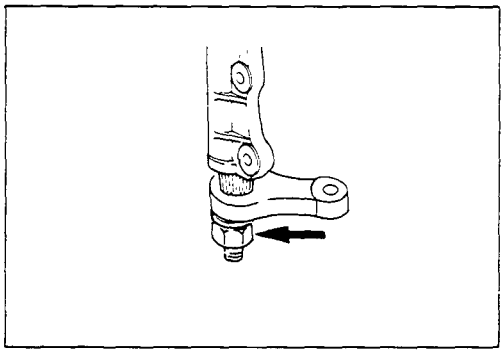

1. Nut

Pitman Arm Nut Torque	kg·m(lb.ft/N·m)
22.0 ±2.0 (159.1 ±14.5/215.8 ±19.6)	

MANUAL STEERING UNIT

DISASSEMBLY

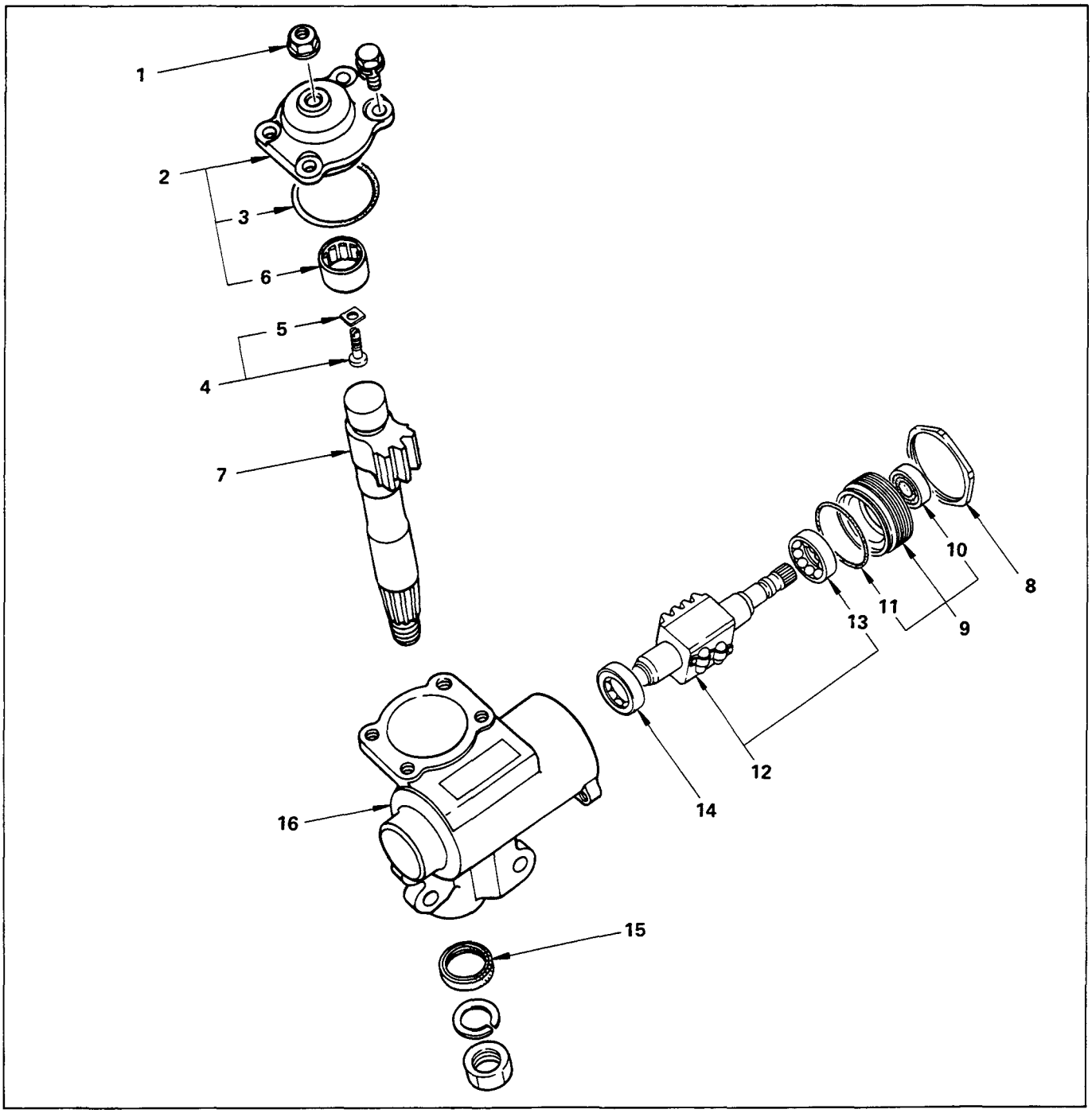

Disassembly Steps

1. Lock nut
▲ 2. Side cover
3. Gasket
4. Adjusting screw
5. Adjusting shim
6. Needle bearing
▲ 7. Sector shaft
▲ 8. Lock nut
▲ 9. End cover
10. Oil seal
11. O-ring
▲ 12. Ball nut and worm shaft
13. Bearing
14. Bearing
15. Oil seal
16. Gear box

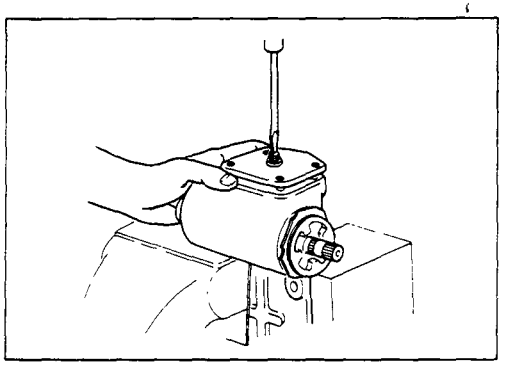

Important Operations

2. Side Cover

(1) Turn the adjusting screw counter-clockwise slightly, then remove the side cover fixing bolt.
(2) Turn the adjusting screw clockwise with the side cover held from turning.

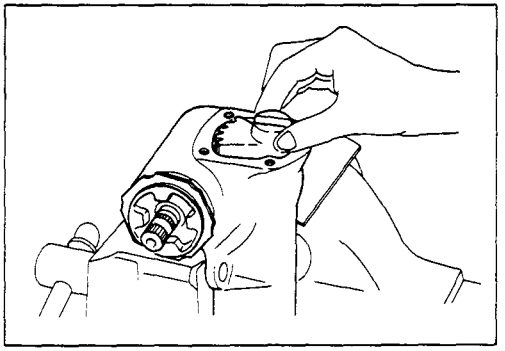

7. Sector Shaft

Hold the sector shaft in straight-ahead position when removing it from the gear box. Do not drive the sector shaft off the gear box with a hammer or other impact tools.

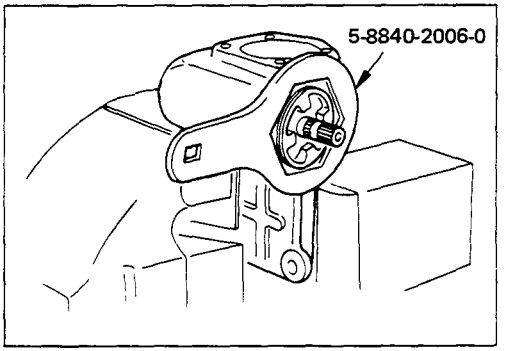

8. Lock Nut

Lock Nut Wrench : 5-8840-2006-0
(J-29753)

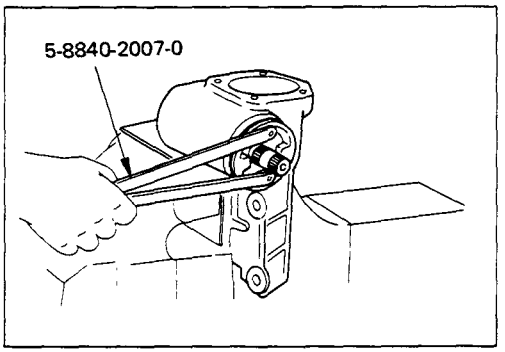

9. End Cover

(1) End Cover Remover : 5-8840-2007-0
(J-7624)

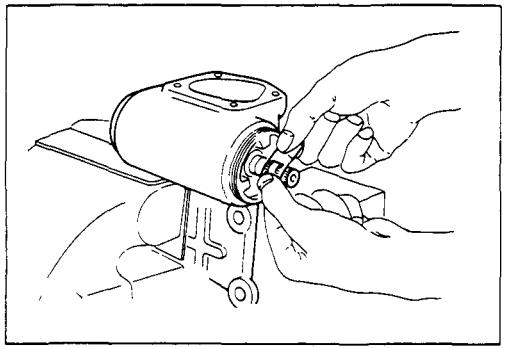

(2) When removing, take care so as not to damage the oil seal.
Taping the splines will provide some protection.

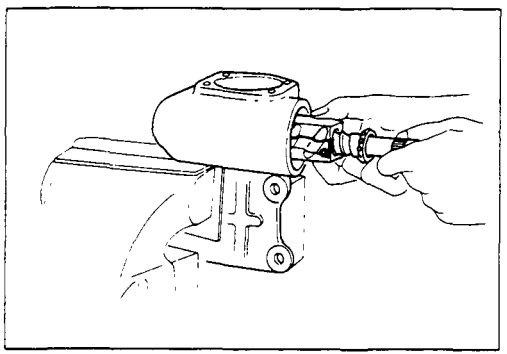

12. Ball-Nut and Worm Shaft

Always keep ball-nut assembly in a horizontal position. Do not hold it vertically, or ball-nut will slide out.

INSPECTION AND REPAIR

Make necessary correction or parts replacement if wear, damage or any other abnormal conditions are found through inspection.

- Bearing
- Oil seal, bushing
- Ball-nut and worm shaft
- Sector shaft
- Gear box

Visual Check

Inspect the following parts for wear, damage or other abnormal conditions.

Ball-Nut Rotation

Hold the worm shaft vertically and check that the ball-nut lowers with a smooth turning motion. If the lowering of the ball-nut by its own weight is not smooth, check the worm shaft for bending and the ball-groove for burrs, dents, and foreign matter.

Note:

When testing the ball-nut assembly, do not let it travel all the way to the end of worm shaft, or damage to the ball tubes will result.

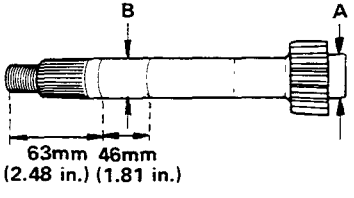

Sector Shaft Outside Diameter mm(in)

	Standard	Limit
A	28.6 (1.13)	28.3 (1.12)
B	31.8 (1.25)	31.5 (1.24)

REASSEMBLY

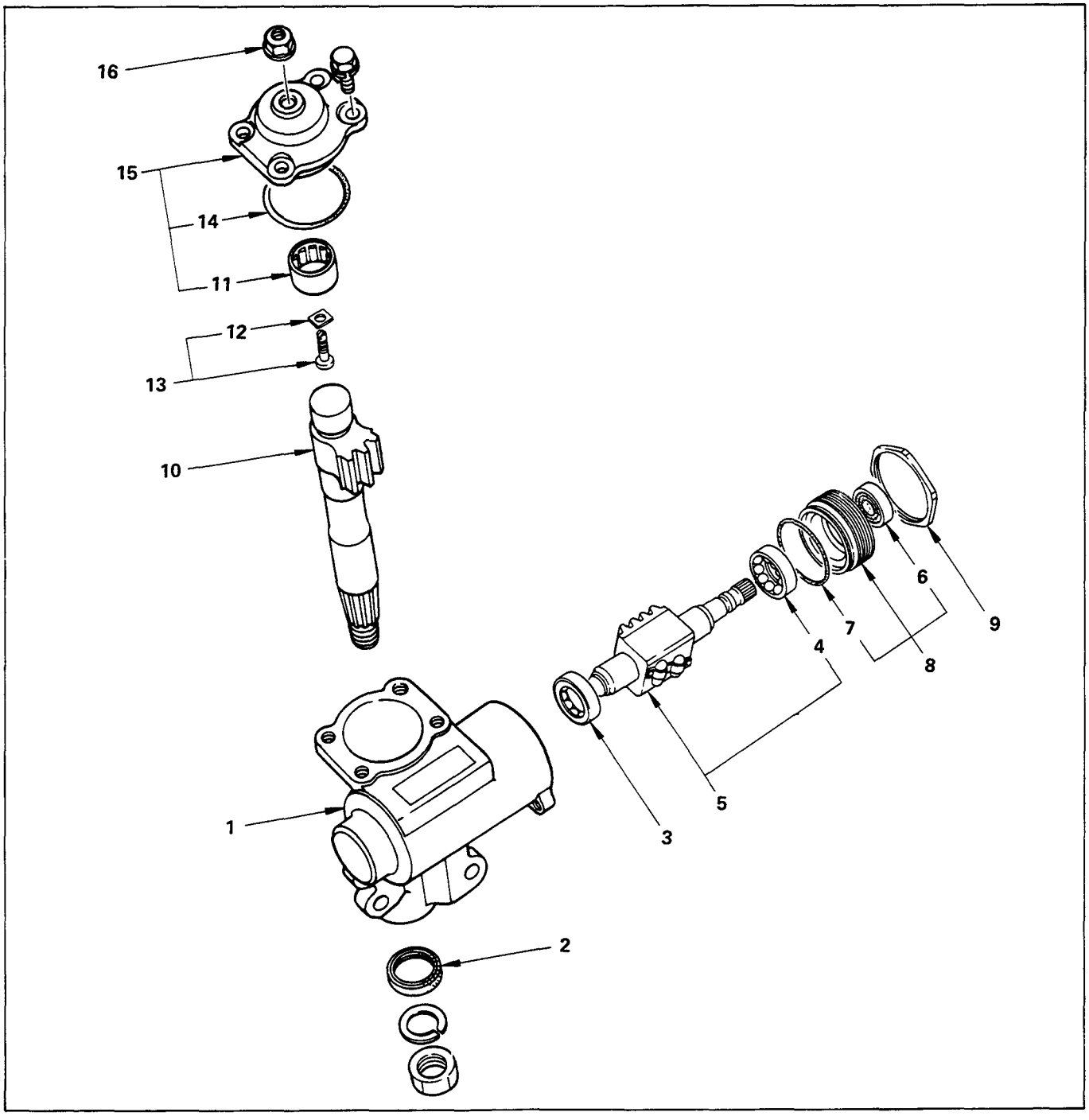

Reassembly Steps

1. Gear box
2. Oil seal
3. Bearing
4. Bearing
5. Ball nut and worm shaft
6. Oil seal
7. O-ring
8. ▲ End cover
9. ▲ Lock nut
10. ▲ Sector shaft
11. Needle bearing
12. ▲ Adjust shim
13. Adjust screw
14. ▲ Gasket
15. ▲ Side cover
16. ▲ Lock nut

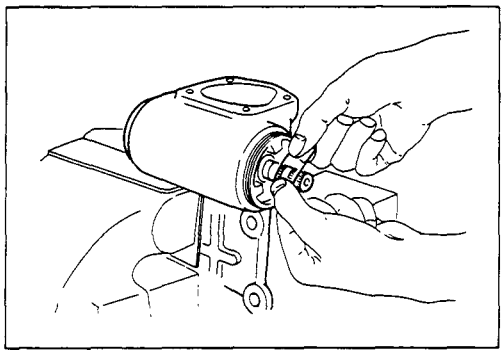

Important Operations

8. End Cover

(1) When installing, take care so as not to cause damage to the oil seal.
Taping the splines will provide some protection.

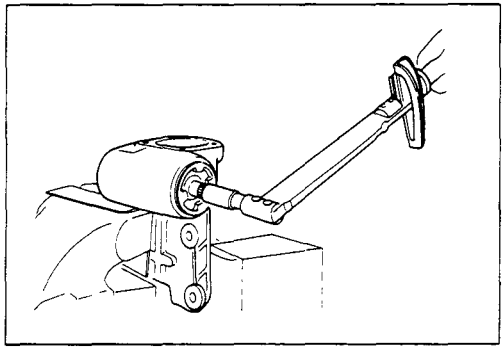

(2) Adjust the bearing preload by using socket.

Bearing Preload	kg·m(lb.ft/N·m)
0.03—0.06 (0.22—0.43/0.29—0.59)	

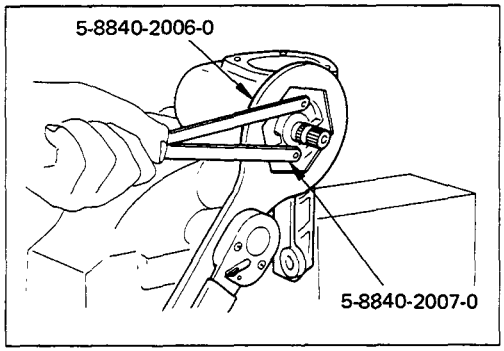

9. Lock Nut

Lock Nut Torque	kg·m(lb.ft/N·m)
18.0 ±2.0 (130.2 ±14.5/176.5 ±49.0)	

Lock Nut Wrench : 5-8840-2006-0 (J-29753)
End Cover Installer : 5-8840-2007-0 (J-7624)

Note:

After tightening, check the bearing preload.

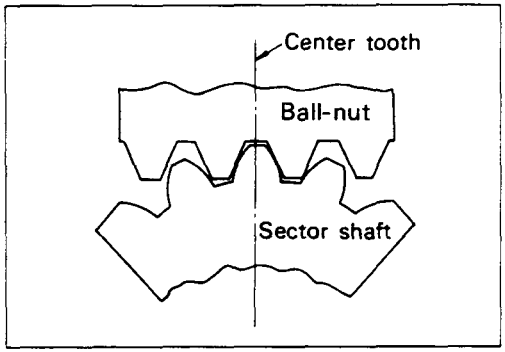

10. Sector Shaft

Align the center tooth of the ball-nut with that of the sector shaft.

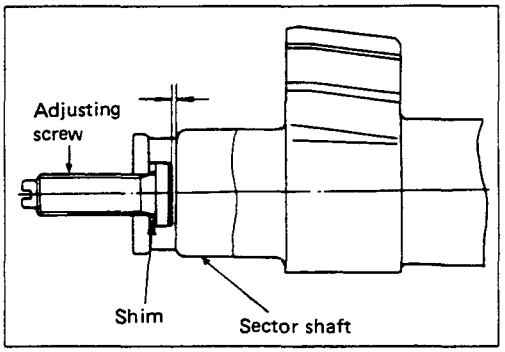

12. Adjust Shim

Adjust the clearance and check that the adjusting screw turns freely.

Clearance	mm(in)
0.1 (0.004)	

Adjusting shims available	mm(in)
1.524 (0.0600)	
1.554 (0.0612)	
1.585 (0.0624)	
1.615 (0.0636)	
1.646 (0.0648)	

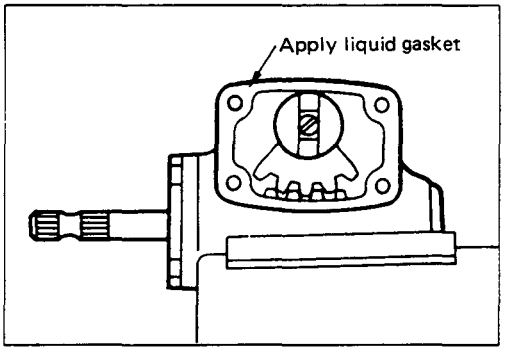

14. Gasket

15. Side Cover

Apply liquid gasket to the joining surface of each parts.

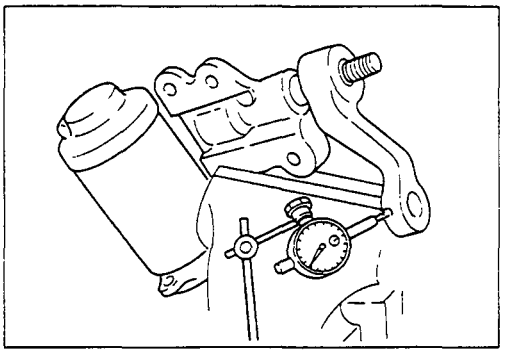

16. Lock Nut

Adjust the backlash between the sector gear and ball-nut.

(1) Install the pitman arm.

(2) Check that the sector shaft moves smoothly in the correct working angle range, then semi-tighten the lock nut.

(3) Measure preload of worm gear.

Preload	kg·m(lb.ft/N·m)
less than 0.11 (0.795/1.079)	

Note:

Obtain the specified backlash by turning the adjust screw.

The backlash should be measured at the drop arm end.

Backlash	mm(in)
0.2 (0.008)	

POWER STEERING UNIT

REPAIR KIT

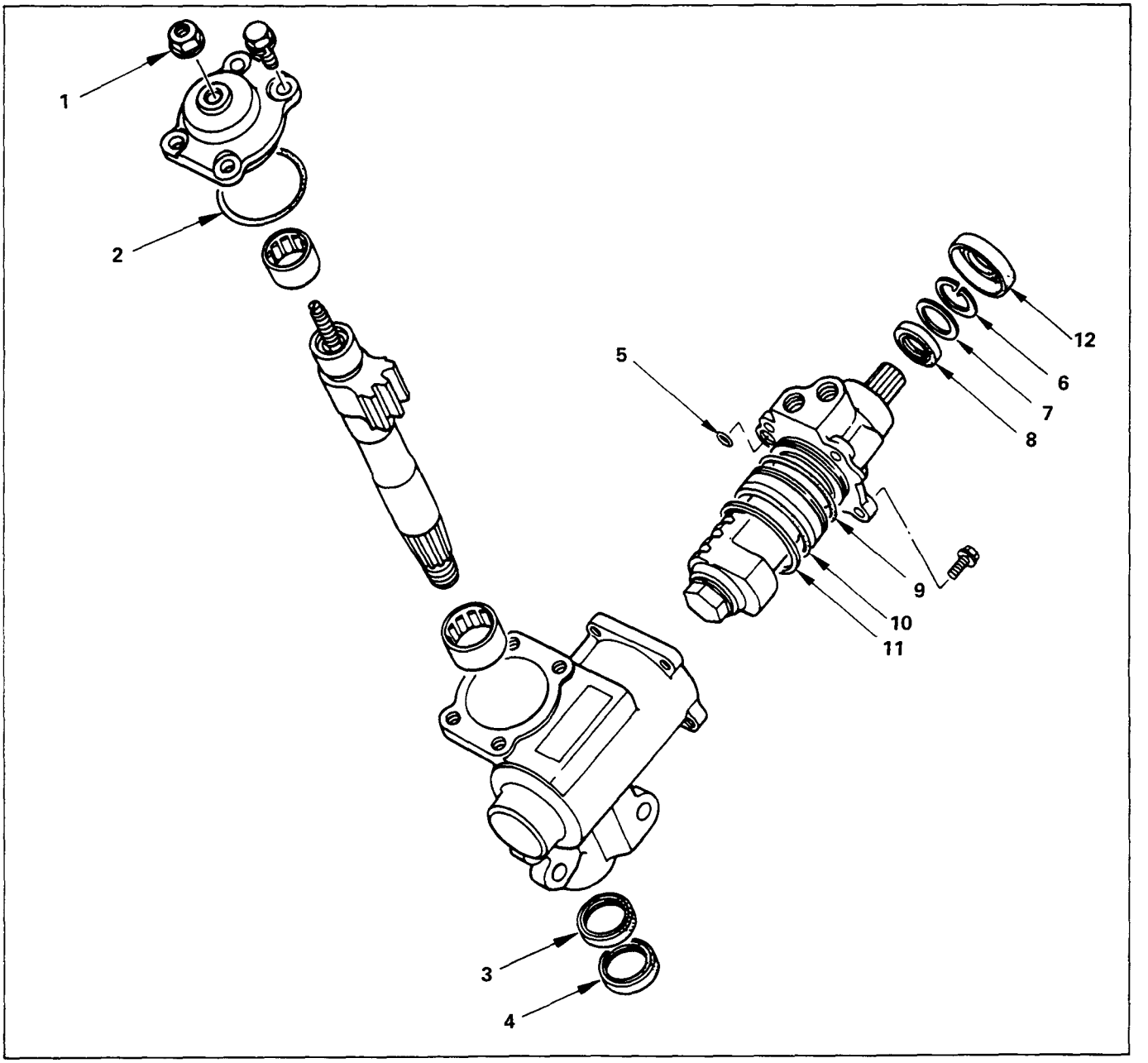

1. Nut : adjust screw
2. Gasket : cover
3. Gasket : sector shaft
4. Seal : sector shaft
5. Gasket : housing
6. Ring : retaining
7. Ring : back up
8. Seal : oil
9. Gasket : housing
10. Gasket : housing
11. Seal ring : housing
12. Dust Cover

DISASSEMBLY

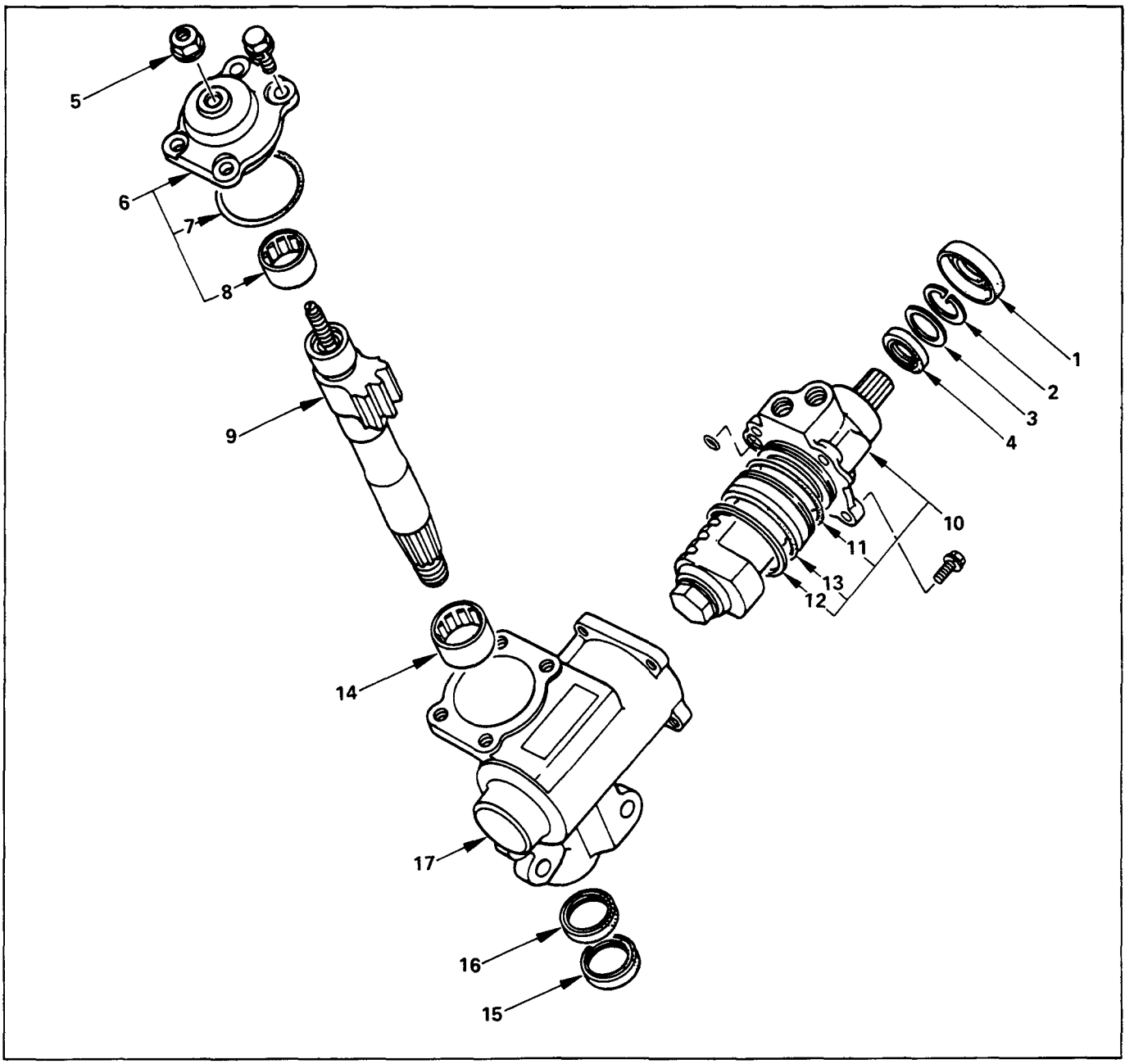

Disassembly Steps

1. Dust cover
2. Retaining ring
3. Back up ring
▲ 4. Oil seal
▲ 5. Lock nut
▲ 6. Top cover assembly
7. O-ring
8. Needle bearing
▲ 9. Sector shaft
▲ 10. Ball nut and valve housing assembly
11. Gasket
12. Seal ring
13. Gasket
14. Needle bearing
15. Sector shaft seal
16. Sector shaft gasket
17. Gear box

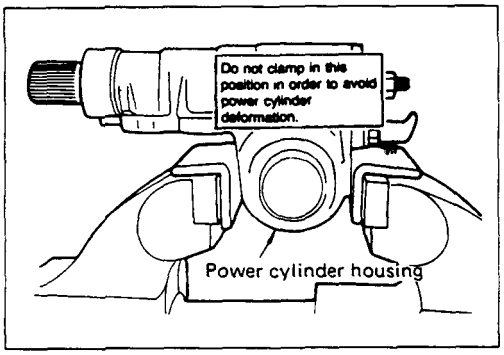

Important Operations

Avoid clamping the steering gear assembly in a vise by the power cylinder housing.

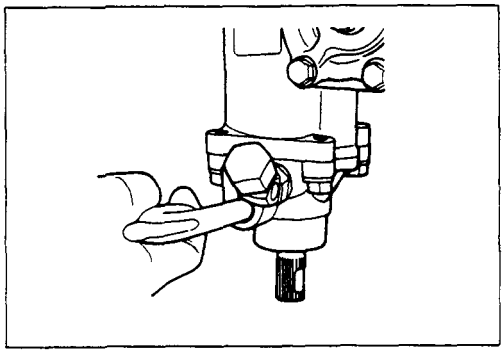

4. Oil Seal

(1) Clean the faces of the extended stub shaft.
(2) Plug the hose fitting on the inlet side.
(3) Remove the oil seal by blowing compressed air through the hole in the outlet side.

5. Lock Nut

Remove the adjusting screw lock nut and turn the adjusting screw counter-clockwise to remove the preload between the sector gear and the rack piston, then remove the top cover bolts.

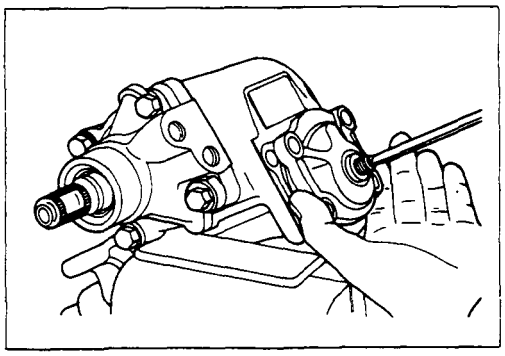

6. Top Cover

Hold the top cover stationary, turn the adjusting screw clockwise to raise and free the cover, then remove the cover.

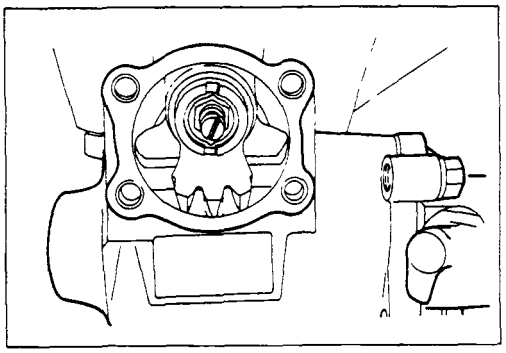

9. Sector Shaft

Bring the stub shaft into straight-ahead position.
Do not force the sector shaft off the gear box with a hammer or other impact tools.

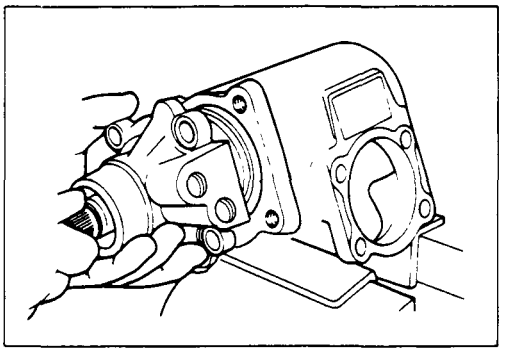

10. Ball Screw and Valve Housing Assembly

It is strongly advisable to keep the ball nut and valve housing assembly always in a horizontal position, or the rack piston will fall off onto the end of the worm, causing the rack piston to slip out of the worm shaft and the balls to fall out.

INSPECTION AND REPAIR

Make necessary correction or parts replacement if wear, damage or any other abnormal conditions are found through inspection.

- Bearing
- Oil seal, Dust seal, Dust cover
- O-Ring, seal ring
- Ball nut and valve housing
- Sector shaft
- Gear box

Visual Check

Inspect the following parts for wear, damage or other abnormal conditions.

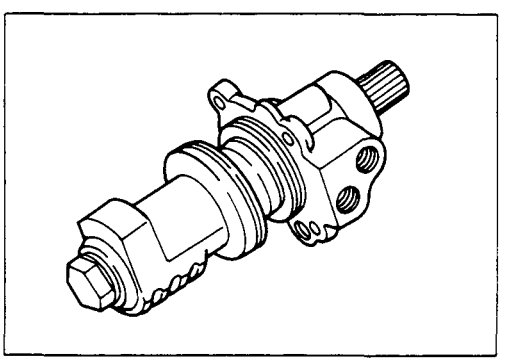

Ball-Nut Rotation

Hold the ball nut and valve housing assembly vertically and see if the ball-nut lowers by turning smoothly. If the lowering of the ball-nut by its own weight is not smooth, check the worm shaft for bending and the ball-groove for burrs, dents and foreign matter.

Note:
When testing the ball nut and valve housing assembly, do not let it travel all the way to the end of worm shaft, or damage to the ball tubes will result.

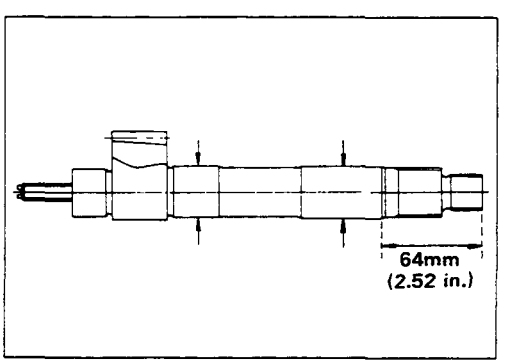

Sector shaft outside diameter

mm(in)

Standard	Limit
32.0 (1.260)	31.97 (1.258)

REASSEMBLY

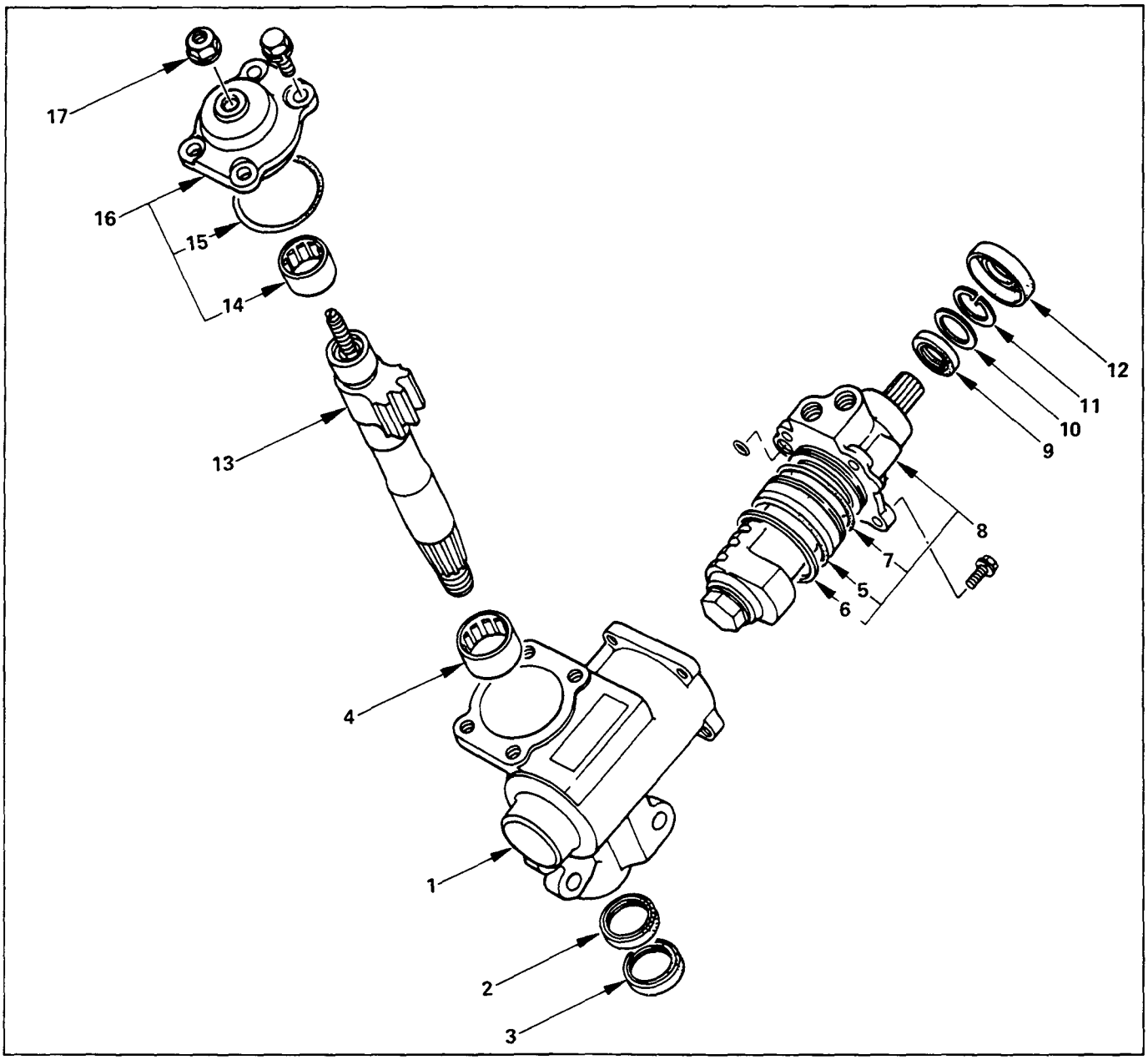

Reassembly Steps

1. Gear box
▲ 2. Gasket
▲ 3. Seal
4. Needle bearing
▲ 5. Gasket
▲ 6. Seal ring
▲ 7. Gasket
▲ 8. Ball nut and valve housing assembly
▲ 9. Oil seal
▲ 10. Back up ring
▲ 11. Retaining ring
12. Dust cover
▲ 13. Sector shaft
14. Needle bearing
15. O-ring
▲ 16. Top cover assembly
▲ 17. Lock nut

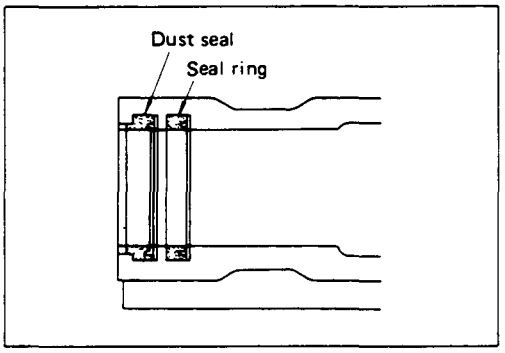

Important Operations

2. Seal Ring

3. Dust Seal

Note the setting direction.
Apply a thin coat of grease to lip of each part.

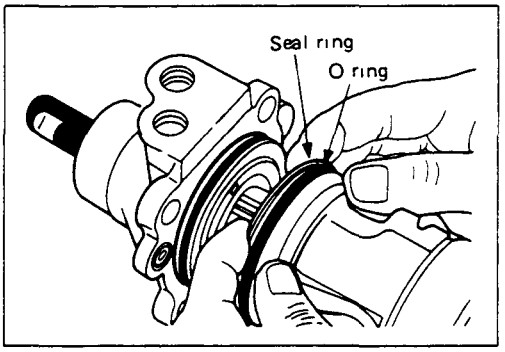

5. O-Ring

6. Seal Ring

7. O-Ring

Apply a thin coat of grease.

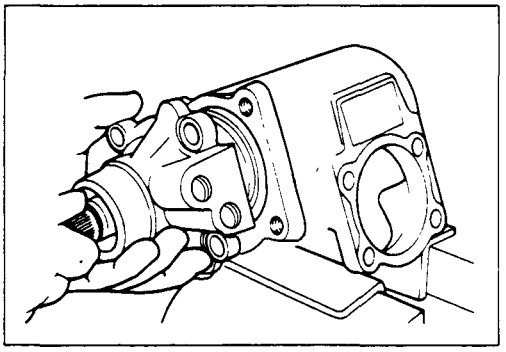

8. Ball Nut and Valve Housing Assembly

(1) It is strongly advisable to keep the ball screw and valve housing assembly always in a horizontal position and avoid holding it vertically, or the rack piston will fall off onto the end of the worm, causing the rack piston to slip out of the worm shaft and balls to fall out.

(2) Be carefull so as not to the drop the O-ring fitted to oil passage in the valve housing.

(3) Tighten the valve housing retaining bolts to the specified torque.

Valve Housing Bolt Torque	kg·m(lb.ft/N·m)
4.7±0.7 (34±5.1/46±7.8)	

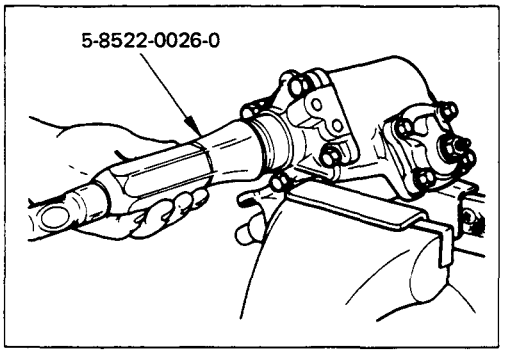

9. Oil Seal

Oil Seal Installer : 5-8522-0026-0
(J-26508)

10. Back Up Ring

11. Retaining Ring

Turn the face with rounded edge (outer circumference) to the oil seal.

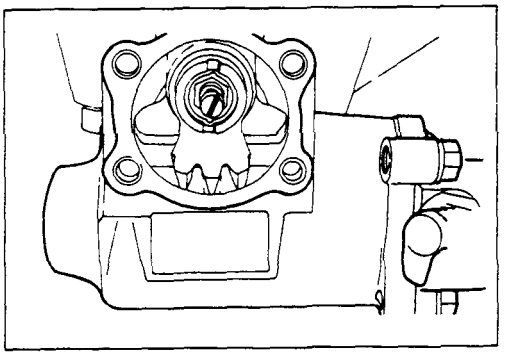

13. Sector Shaft

(1) Tape the sector shaft serrations to protect the seal ring from damage.

(2) Align the center tooth of ball nut with that of the sector shaft.

16. Top Cover Assembly

Top Cover Bolt Torque	kg·m(lb.ft/N·m)
4.5±0.5 (32.5±3.6/44.1±4)	

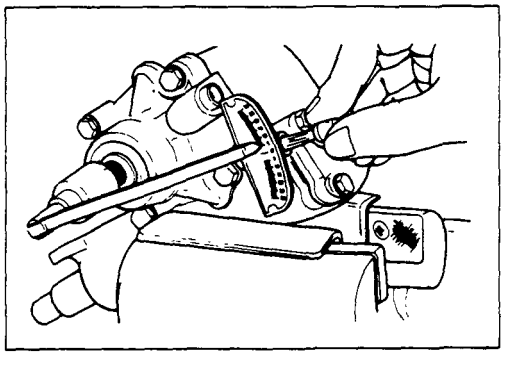

17. Lock Nut

Adjust the backlash between the worm gear and the ball nut.

(1) With the worm gear rotating, set it to the straight ahead position.

(2) Set the worm shaft backlash to below 10 kg-cm with the sector shaft adjusting screw.

(3) Measure the worm shaft backlash with the worm gear turned 450° both to the right and to the left.

The worm gear backlash in these positions should be 2 - 4 kg-cm lower than in the straight ahead position.

(4) Lock the sector shaft adjusting screw with the lock nut.

Lock Nut Torque	kg·m(lb.ft/N·m)
4.2±0.6 (30.4±4.3/41.2±5.9)	

STEERING LINKAGE

GENERAL DESCRIPTION

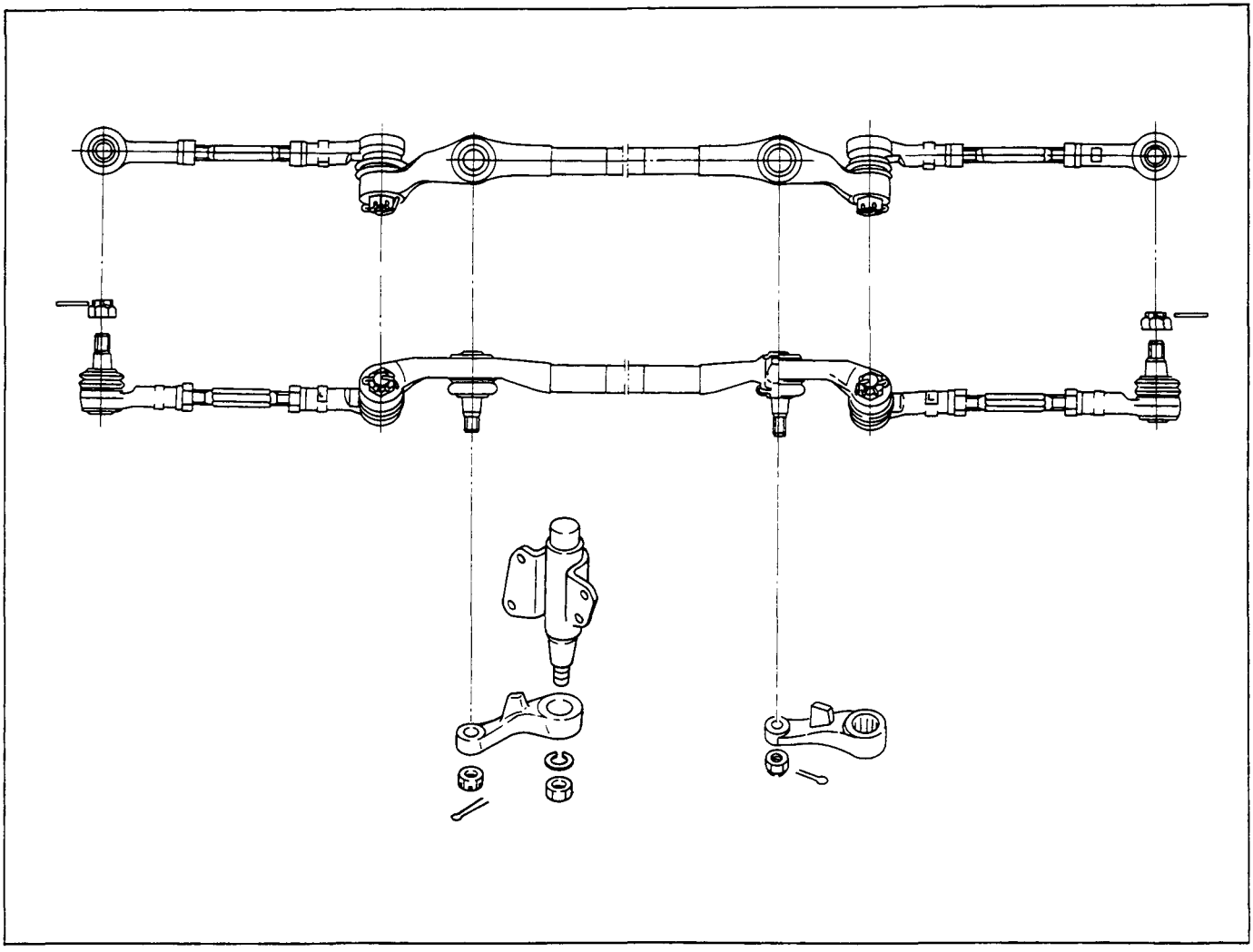

REMOVAL AND INSTALLATION

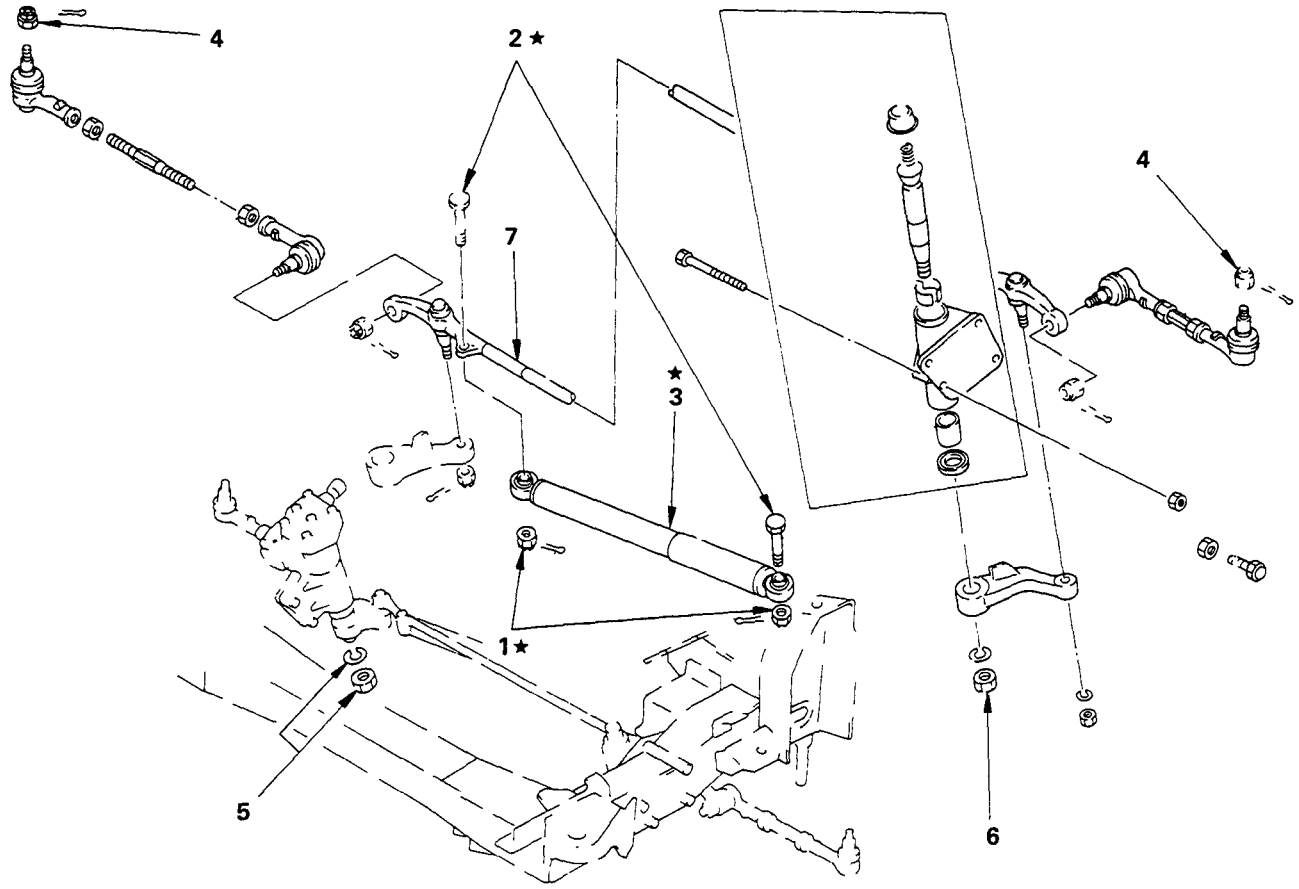

★; Except Europe and Thailand.

Removal Steps

1. Nut
2. Bolt
3. Steering damper
4. Nut
▲ 5. Nut ; pitman arm
▲ 6. Nut ; relay lever
▲ 7. Intermediate rod

Installation Steps

7. Intermediate rod
▲ 6. Nut ; relay lever
▲ 5. Nut ; pitman arm
4. Nut
3. Steering damper
2. Bolt
▲ 1. Nut

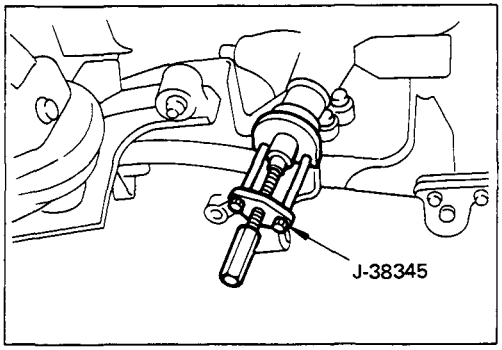

Important Operations — Removal

5., 6. Pitman Arm Nut and Relay Lever Nut

Remove relay lever or pitman arm to shafts nut and lock washer. Remove the relay lever or pitman arm from the shaft using remover.

Remover : 5-8840-2017-0 (J-38345)

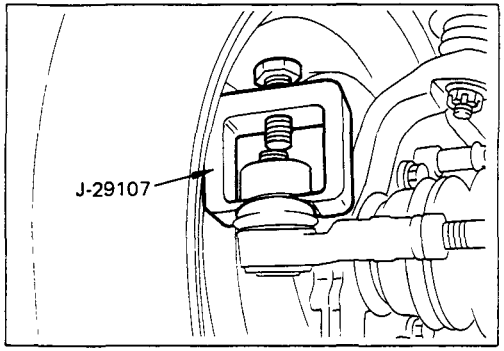

7. Outer Track Rod

Remove split pin from the ball stud connecting outer track rod end. Remove the castellated nuts and disconnect the parts using remover.

Tie Rod Remover : 5-8840-2121-0 (J-29107)

Important Operations — Installation

6. Nut ; Relay Lever

Relay Lever Nut Torque	kg·m(lb.ft/N·m)
12.0 ±1.0 (86.8 ±7.2/117.7 ±9.8)	

5. Nut ; Pitman Arm

Pitman Arm Nut Torque	kg·m(lb.ft/N·m)
22.0 ±2.0 (159.1 ±14.5 ±215.8 ±19.6)	

1. Nut

Steering Damper Torque	kg·m(lb.ft/N·m)
4.0 ±0.5 (28.9 ±3.6/39.2 ±4.9)	

DISASSEMBLY

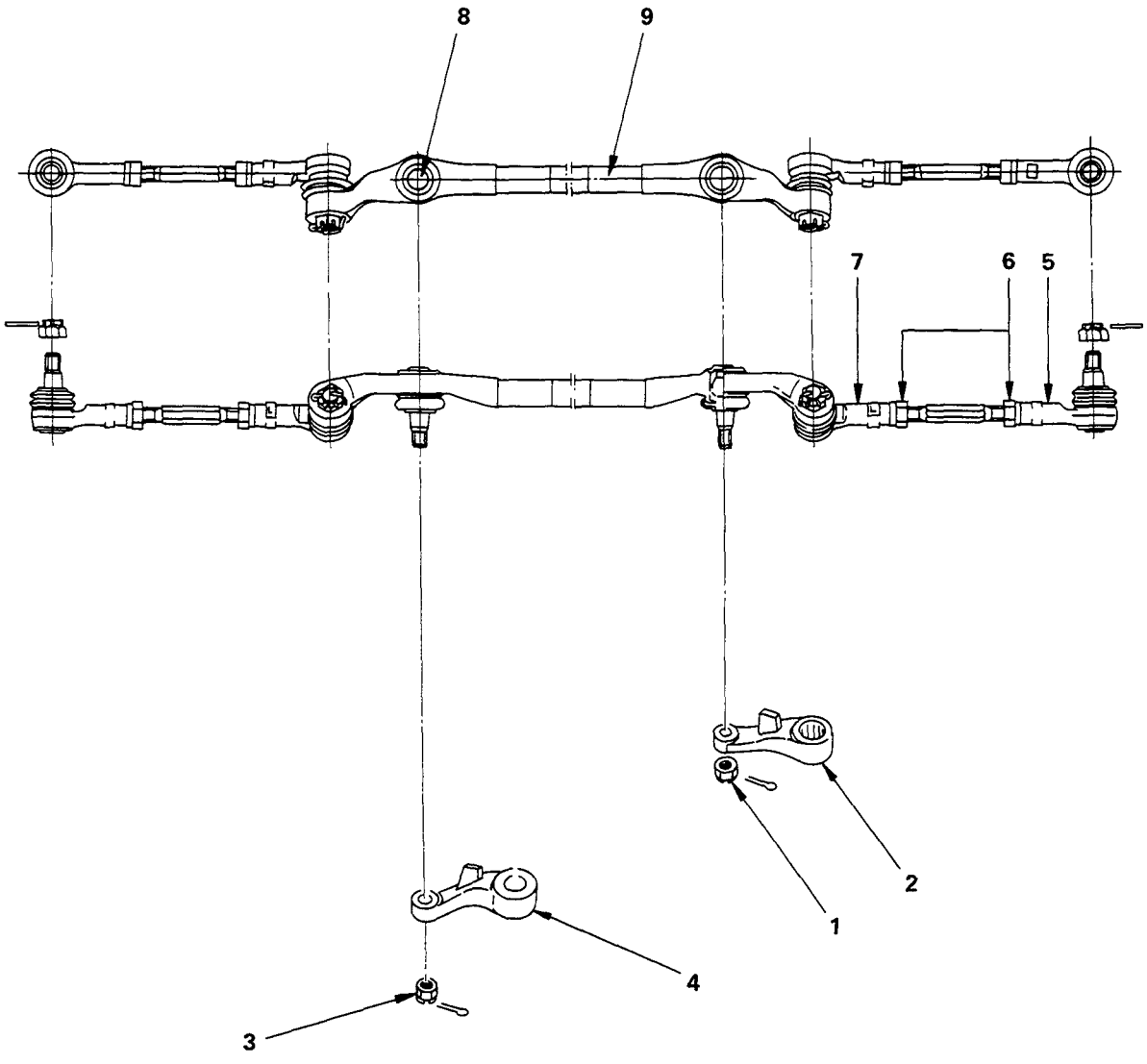

This illustration is based on the LHD model.

Disassembly Steps

1. Nut
2. Pitman arm
3. Nut
4. Relay lever
5. ▲ End assembly (outer)
6. Nut
7. ▲ End assembly (inner)
8. Pin assembly
9. Center track rod assembly

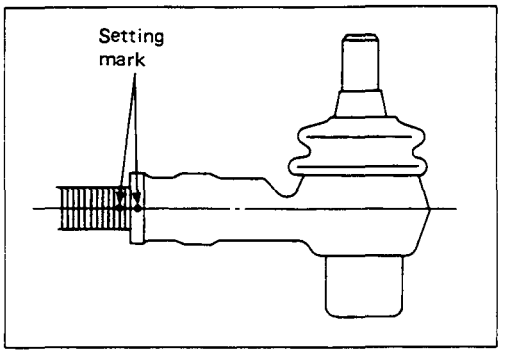

Important Operations

5. End Assembly (Outer)

Apply the setting mark to reassemble the parts in their original position.

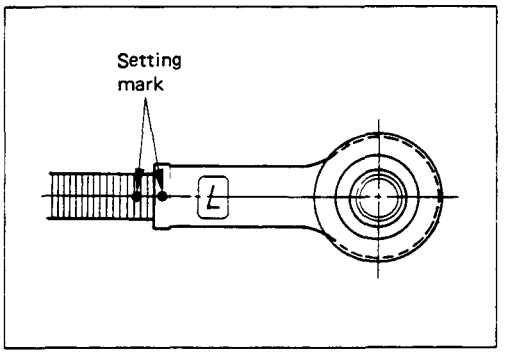

7. End Assembly (Inner)

Apply the setting mark to reassemble the parts in their original position.

INSPECTION AND REPAIR

Make all necessary adjustments, repairs, and part replacements if wear, damage, or other problems are discovered during inspection.

- Pitman arm, relay lever
- End assembly, pin assembly
- Center track rod assembly
- Boot

Visual Check

Inspect the following parts for wear, damage or other abnormal conditions.

Ball Joints (Center Track Rod Assembly and Outer Track Rod Track Rod Assembly)

Inspect the following.

If one or more of the abnormal conditions listed in parenthesis is discovered during inspection, the entire track rod assembly(s) must be replaced.

1. Ball joint boot (Tearing and grease leakage)
2. Ball joint (Rough movement)

   The ball joint must move sommthly with no snagging.
3. Ball joint screws (Excessive damage)
4. Ball joint tapered surfaces (Excessive wear and damage)

REASSEMBLY

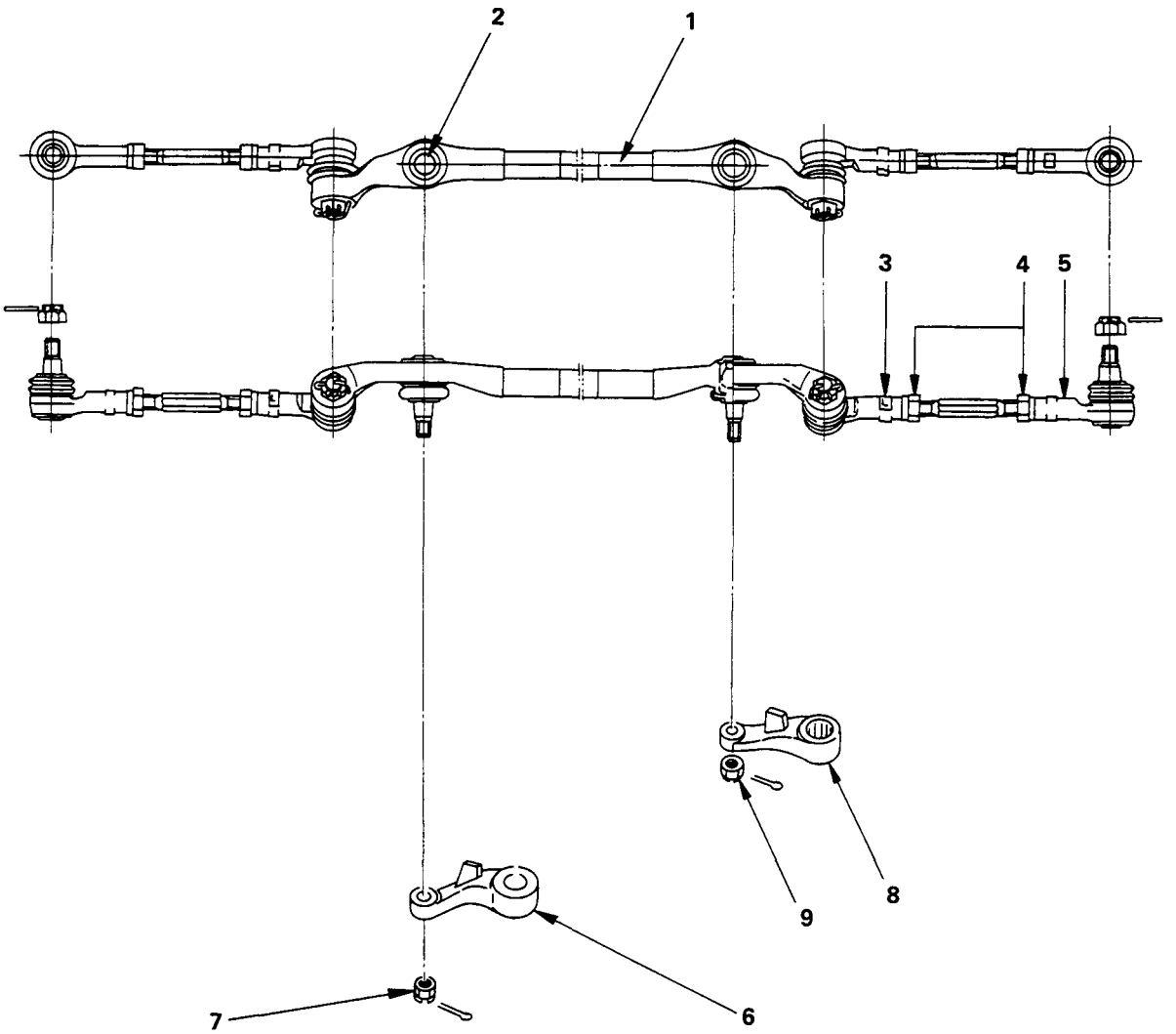

This illustration is based on the LHD model.

Reassembly Steps

1. Center track rod assembly
2. Pin assembly
3. ▲ End assembly (inner)
4. ▲ Nut
5. ▲ End assembly (outer)
6. Relay lever
7. ▲ Nut
8. Pitman arm
9. ▲ Nut

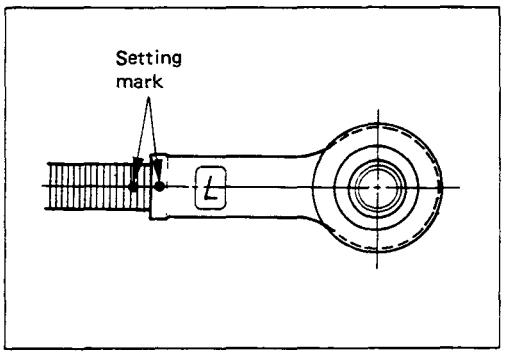

Important operations

3. End Assembly (Inner)

Align the setting marks applied at the disassembly.

End Assembly Torque	kg·m(lb.ft/N·m)
12.0 ±2.0 (86.8 ±14.5/117.7 ±19.6)	

After tightening, stake the two portions securely.

4. Nut

End Assembly Nut Torque	kg·m(lb.ft/N·m)
10.0 ±1.0 (72.3 ±7.2/98.1 ±9.8)	

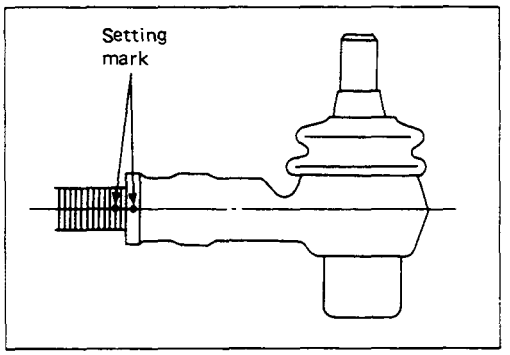

5. End Assembly (Outer)

Align the setting marks applied during disassembly.

7. Nut

Relay Lever Nut Torque	kg·m(lb.ft/N·m)
6.0 ±0.5 (43.4 ±3.6/58.8 ±4.9)	

9. Nut

Pitman Arm Nut Torque	kg·m(lb.ft/N·m)
10.0 ±1.0 (72.3 ±7.2/98.1 ±9.8)	

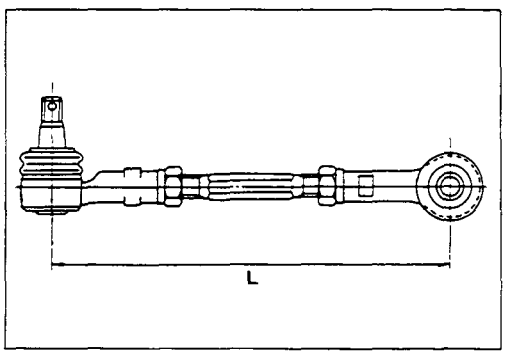

Note:

When change the track rod, adjust the track rod length.

mm(in)

4 x 2	306.9 ± 1.5 (12.08 ± 0.059)
4 x 4	262 ± 1.5 (10.31 ± 0.059)

ADJUSTMENT

Adjust the toe-in angle.

POWER STEERING OIL PUMP

GENERAL DESCRIPTION

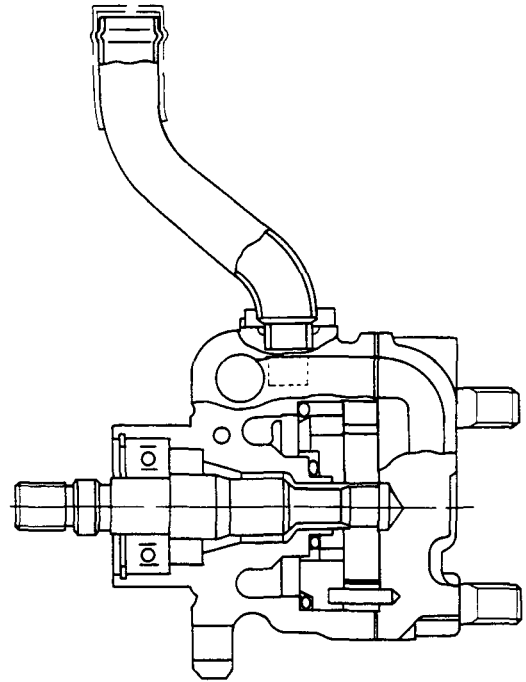

REPAIR KIT

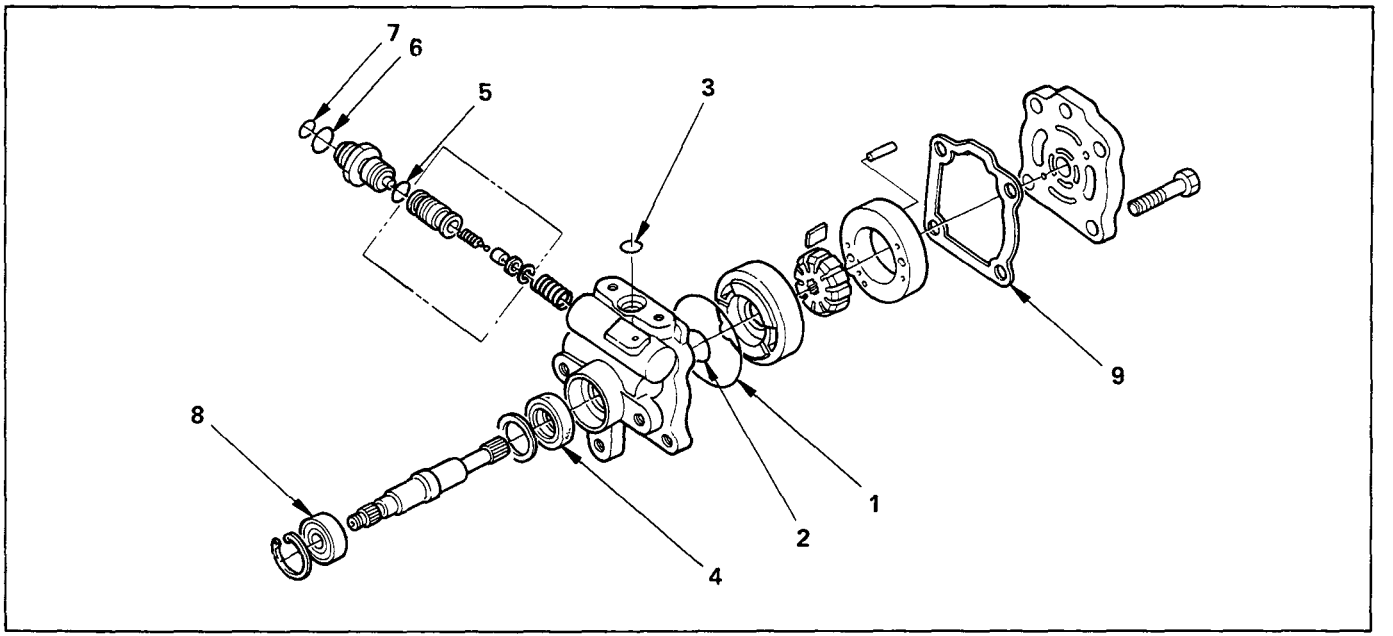

1. O-ring
2. O-ring
3. O-ring
4. Oil seal
5. O-ring
6. O-ring
7. O-ring
8. Bearing
9. Gasket

REMOVAL AND INSTALLATION

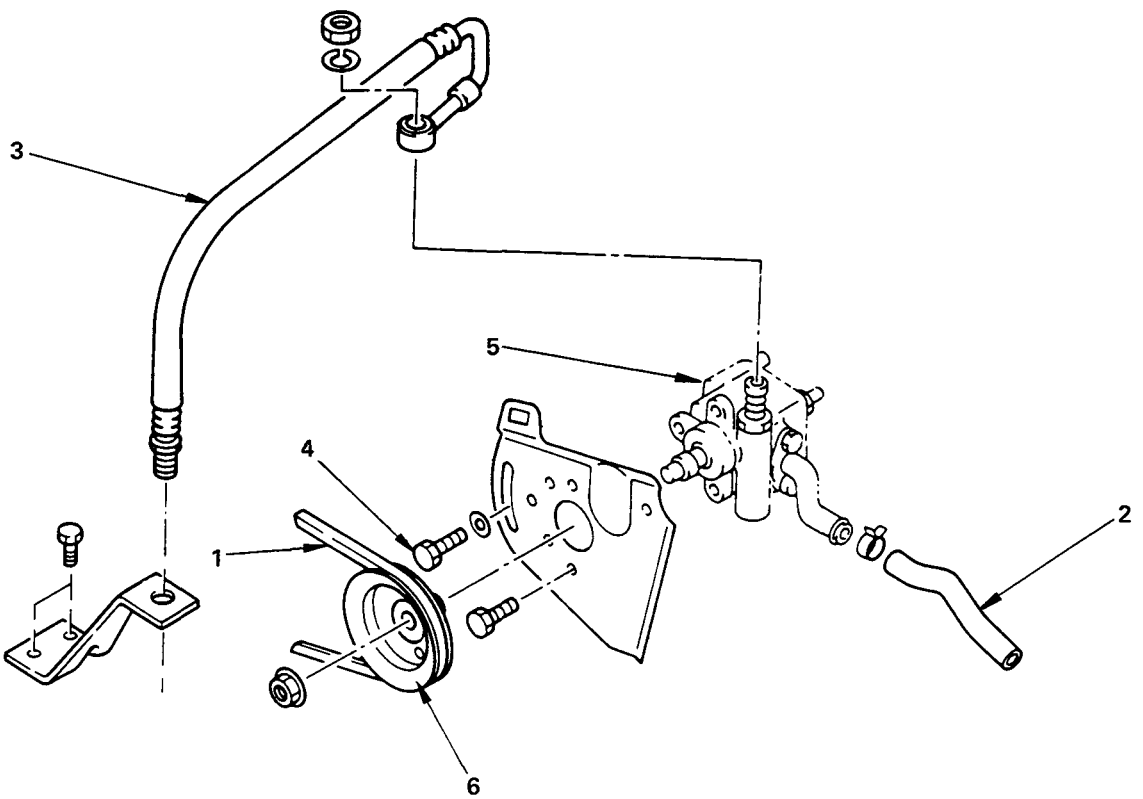

Removal Steps

1. Belt : oil pump
2. Hose : rubber, suction
3. Hose : flexible
4. Bolts
5. Pump assembly : oil
6. Pulley : oil pump

Installation Steps

To install follow the removal procedure in reverse order

DISASSEMBLY

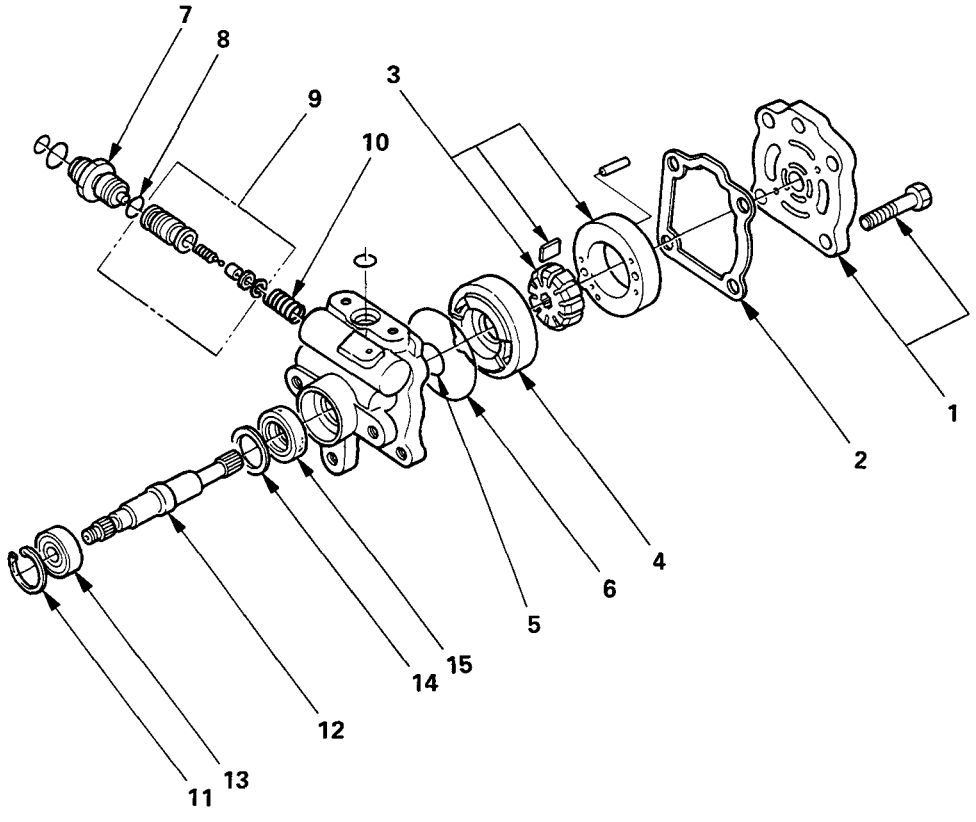

Disassembly Steps

1. Cover and bolt
2. Gasket
3. Cartridge assembly
4. Pressure plate
5. O-ring
6. O-ring
7. Connector
8. O-ring
9. Flow control valve assembly
10. Spring
▲11. Snap ring
▲12. Shaft
▲13. Bearing
14. Retaining ring
▲15. Oil seal

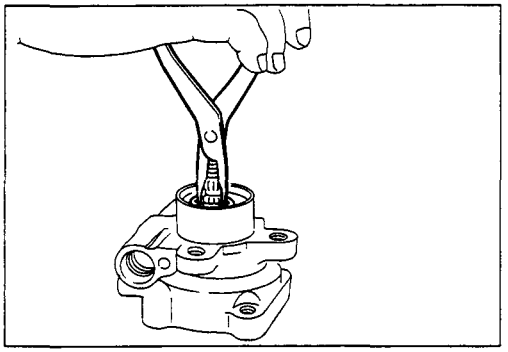

Important Operations

11. Snap Ring

Use a pair of snap ring pliers to remove the snap ring.

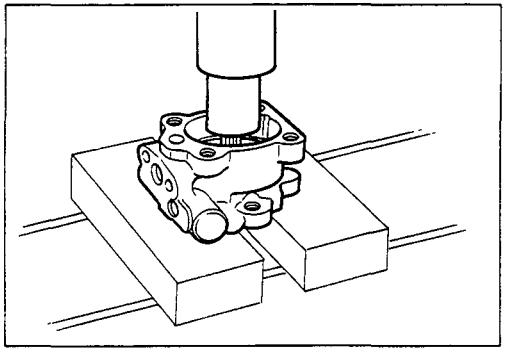

12. Shaft

Use a bench press to slowly force the shaft from the rear cover side.

Note:

Take care not to damage the end of the shaft when removing the shaft.

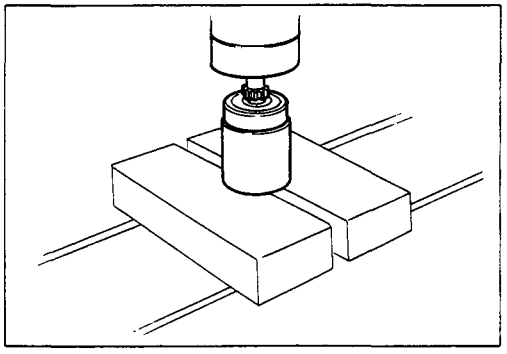

13. Bearing

Use the bench press and bearing remover.

Bearing Remover : 5-8840-2206-0

Note:

Take care not to damage the shaft when removing the shaft.

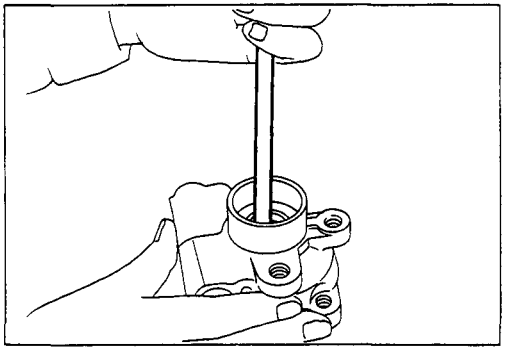

15. Oil Seal

Use a suitable bar.

INSPECTION AND REPAIR

Make all necessary adjustments, repairs, and part replacements if wear, damage, or other problems are discovered during inspection.

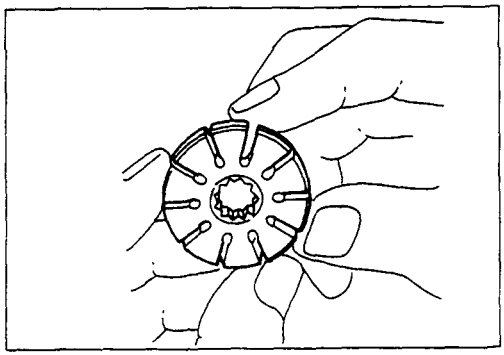

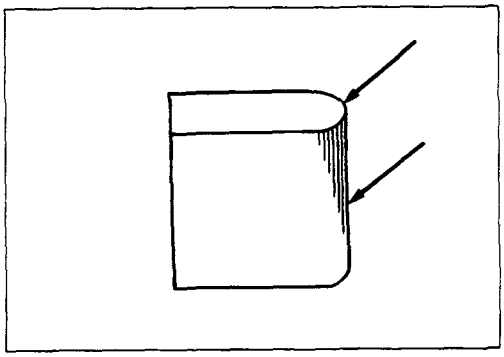

Rotor

Check that the groove in the vane is free from excessive wear and that the vane slides smoothly.

When part replacement becomes necessary, the pump cartridge should preferably be replaced as a sub assembly.

Vane

Sliding faces of the vane should be free from wear. (particularly the curved face at the tip in contact with the cam should be free from wear and distortion.)

When part replacement becomes necessary, the pump cartridge should preferably be replaced as a sub assembly.

Cam

The inner face of the cam should have a trace of uniform contact without a sign of step wear.

When part replacement becomes necessary, the pump cartridge should preferably be replaced as a sub assembly.

Pressure Plate and Thrust Plate

The sliding faces of the parts must be free from step wear (more than 0.01 mm) which can be felt by the finger nail.

The parts with minor scores may be reused after lapping the face.

Shaft

Oil seal sliding faces must be free from a step wear which can be felt by the finger nail.

REASSEMBLY

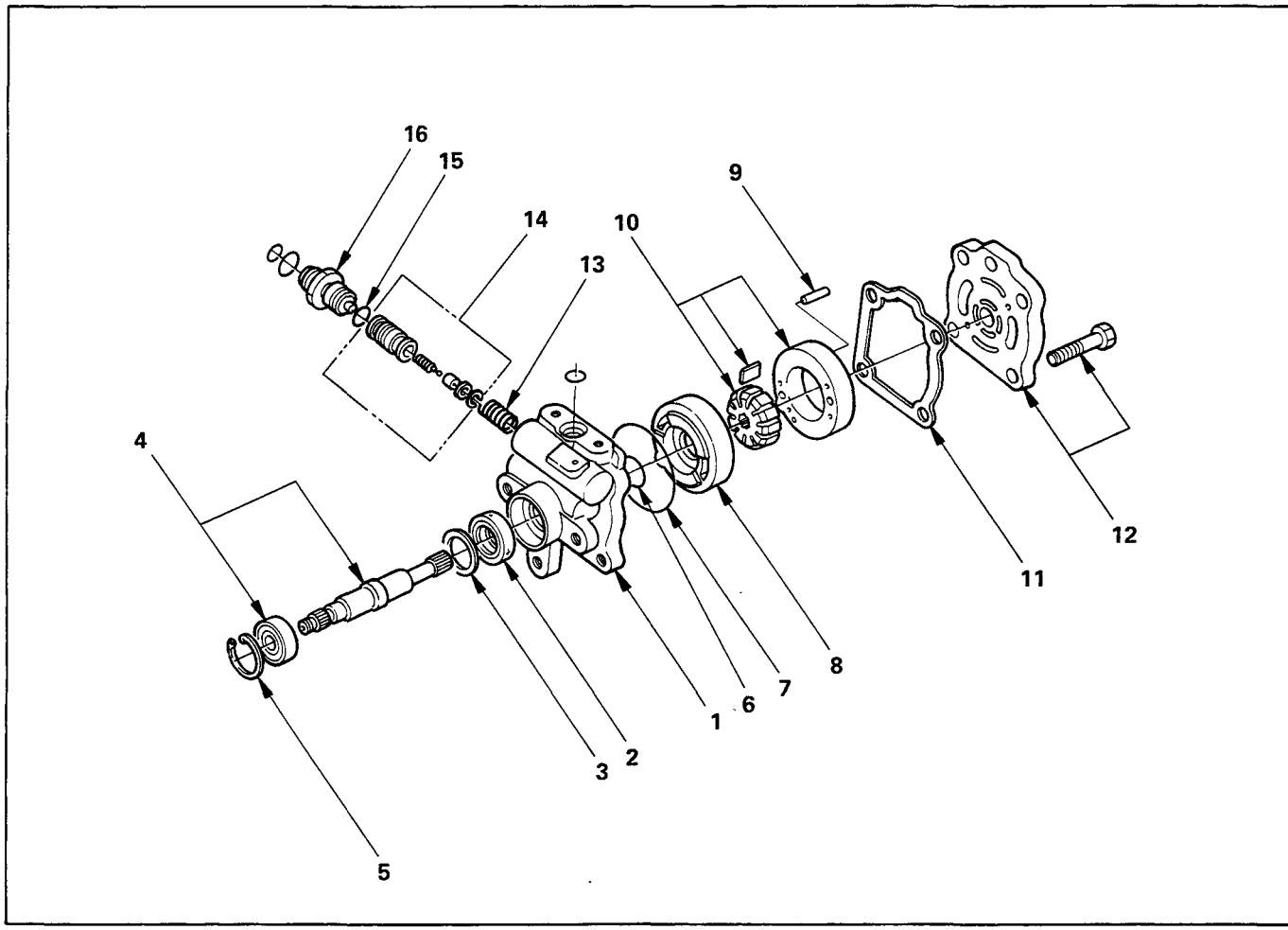

Reassembly Steps

1. Body assembly
▲ 2. Oil seal
3. Retaining ring
▲ 4. Shaft and bearing
▲ 5. Snap ring
6. O-ring
7. O-ring
8. Pressure plate
9. Pin
▲ 10. Cartridge assembly
11. Gasket
▲ 12. Cover and bolt
13. Spring
14. Flow control valve assembly
15. O-Ring
▲ 16. Connector

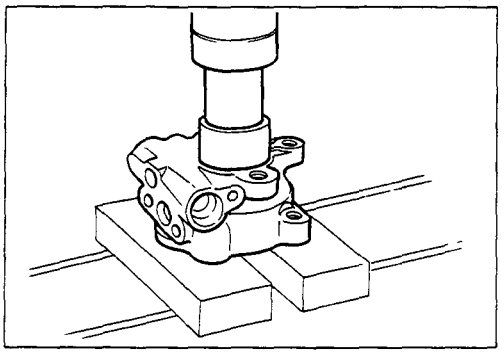

Important Operations

2. Oil Seal

Apply compressed air to the inside of the oil pump body.

Use the bench press and oil seal installer.

Oil Seal Installer : 5-8840-2205-0

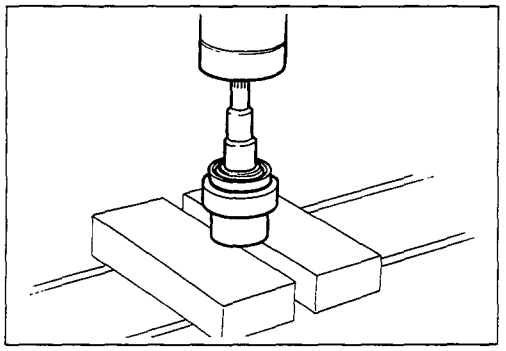

4. Shaft and Bearing

Install the bearing to the shaft with a bench press and bearing installer.

Bearing installer: 5-8840-2206-0

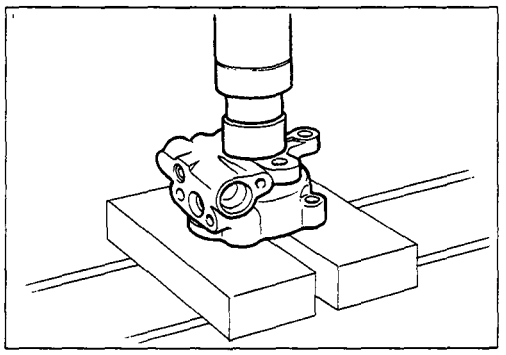

Use a bench press and bearing installer to slowly farce the shaft from front side of the oil pump body.

Bearing Installer : 5-8840-2206-0

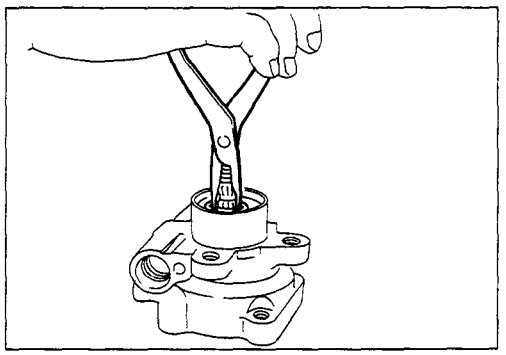

5. Snap Ring

Use a pair of snap ring pliers to install the snap ring.

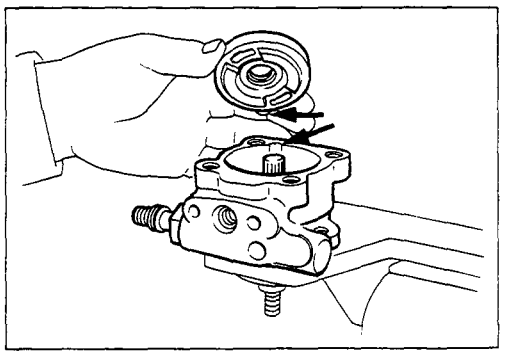

8. Pressure Plate

When installing the pressure plate, align the projection of pressure plate with the grove of oil pump body.

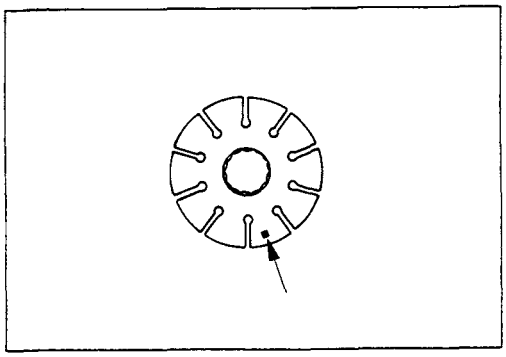

Rotor

Place the rotor so that specified mark ■ turns down.

Note:

When part replacement becomes necessary, the pump cartridge should be replaced as a sub assembly.

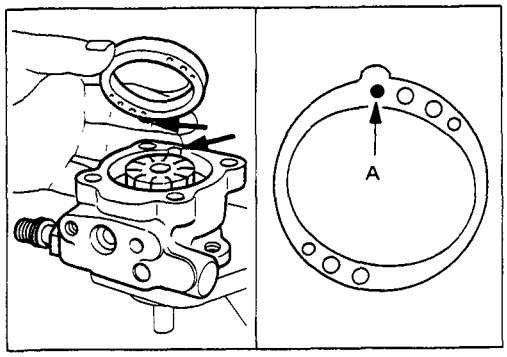

Cam

When installing the cam, align the projection of cam with the grove of oil pump body.

Install the cam with the pin "A" side turn down.

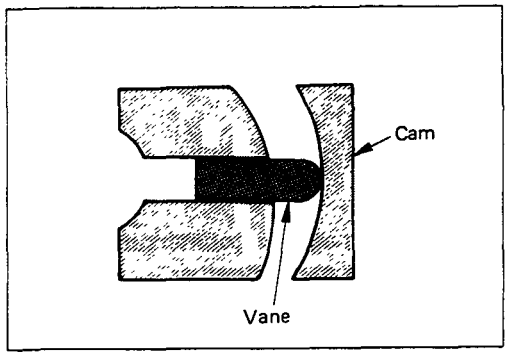

Vane

The round end of the vane should be matched to the inner surface of the cam ring.

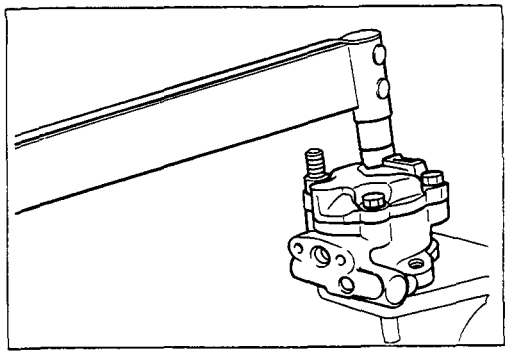

12. Cover and Bolt

Torque	kg·m(lb.ft/N·m)
5.5 ± 0.5 (39.8 ± 3.6/53.9 ± 4.9)	

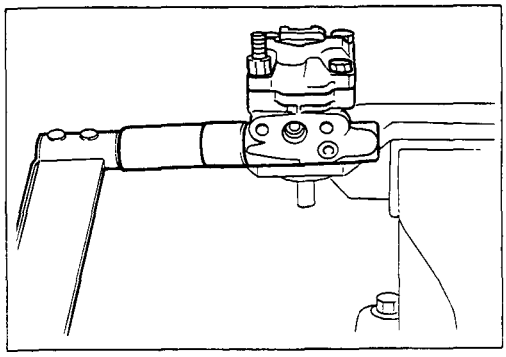

16. Connector

Torque	kg·m(lb.ft/N·m)
5.5 ± 0.5 (39.8 ± 3.6/53.9 ± 4.9)	

TROUBLESHOOTING

INSPECTION PROCEDURES FOR STEERING SYSTEM

COMPONENT AND TEST		PROCEDURE
HANDLE	Check for play and slack	1. Place the steering wheel in the straight forward position. Gently move the wheel to the right and to the left. About ten millimeters of play in either direction should be present before the front tires begin to move. If the vehicle is equiped with power steering, the engine should be running when these tests are made. 2. Grasp the steering wheel firmly with both hands. Exert force in an up and down direction on the steering column. There should be no play. 3. Move the steering wheel to the right and to the left. Check to see the steering shaft. Make sure that there is no slack in those areas where parts are joined together.
	Check the operating condition of the system	1. Make the following checks while actually driving the vehicle. a. Check the position of the steering wheel when the vehicle is traveling straight ahead. b. Make sure that the vehicle does not have a tendency to steer to the right or the left. c. There should be no excessive vibration present at the steering wheel. d. Turn the vehicle as sharply as possible to both the right and the left. When the steering wheel is turned fully in either direction, check for abnormal noise. Neither should the wheel feel overly heavy when it is fully turned to either the left or the right. Loosen your grip on the steering wheel. It should return to its center position.
GEAR BOX	Check for oil leakage	1. Check all parts of the steering unit (the oil seals of the front cover, side cover, sector shaft, etc.) to make sure that there is no oil leakage.
	Check for looseness in the assembly	1. With the wheels of the vehicle on the ground (the vehicle should not be jacked up), have an assistant or helper turn the steering wheel to the right and to the left. As he does this, you should carefully check all areas where the steering unit is attached to the frame for looseness and other possible problems.
	Check for bearing backlash	1. Check the condition of the connections between the steering shaft and the bearings. Move the steering shaft in the direction of the axle and make sure that there is no backlash present. 2. Rotate the steering shaft. There should be no abnormal noise. It should rotate smoothly and there should be no feeling of roughness. Check to make sure that there is no abnormal or excessive bearing wear.
	Check for gear backlash	1. The front wheels should be facing straight ahead. Have an assistant or helper grasp the drop arm so as to immobilize it. Now try to turn the steering wheel. Backlash should not exceed one millimeter.
	Inspect the sector shaft for cracks	1. Remove the steering unit from the vehicle and break it down into its component parts. Carefully inspect the sector shaft for cracks or other damage.

COMPONENT AND TEST		PROCEDURE
RODS AND ARMS	Check for play, backlash, and damage	1. With the wheels of the vehicle on the ground (the vehicle should not be jacked up), have an assistant or helper turn the steering wheel to the right and to the left. As he does this, you should carefully check the connecting points of all the parts for play, slack, or damage. a. Specifically check the pitman arm, the intermediate rod, the tie rods, the tie rod ends, the knuckle arms, and the relay lever. 2. Carefully check all of the pins for cracks and other damage. 3. Make sure that the rod end boots and related areas are not cracked or otherwise damaged.
	Check the coupling parts for abrasion and other abnormal conditions	1. The ball joints and the rubber bushings should be free from abrasion or any other damage. 2. Pay careful attention to the coupling areas. Make sure that everything is properly connected.
	Check for cracks in the knuckle arms and also for poor knuckle attachment	1. Make sure that both the knuckle arms and the tie rod arms are free from cracks. The fit between the knuckles and the tapers should be secure. Look for any abnormal coloring which may indicate trouble.
KNUCK-LES	Check for loose and damaged joints	1. Jack up the front axle and the front crosspiece. By hand, rotate the two front tires in either direction. Check that the king pins and the ball joints are free of play or slack. If play or slack is present, have an assistant or helper, hold down the brake pedal. Using a dial gauge, once again check the wheels for play and vibration. It is possible that the problem lies not with the steering system but with the wheel bearings.
	Check the gap between the steering knuckles and the front axle	1. Use a thickness gauge or other appropriate tool to measure the width of the gap between the steering knuckles and the front axle. Measure in the direction of the king pin. After measurement, thrust washers may be inserted to alter the gap.

1. HARD STEERING WITH POOR STEERING WHEEL RETURN

Checkpoint		Trouble Cause		Countermeasure
Tire inflation pressure	NG	Low tire inflation pressure	—	Correct the tire inflation pressure
OK				
Oil level in the reservoir (Power steering only)	NG	Insufficient oil	—	Replenish the oil
OK				
Steering wheel play	NG	Insufficient play	—	Adjust the play
OK				
Front wheel alignment	NG	Front wheels out of alignment	—	Correct the front wheel alignment
OK				
Steering linkage	NG	Joint ball sticking or rusted	—	Repair or replace the joint ball and/or the ball seat
OK				
Steering shaft bearings	NG	Bearings sticking or rusted	—	Replace the bearings
OK				

Continued on the next page

Continued from the previous page

Checkpoint		Trouble Cause	Countermeasure
Joints and sleeve yoke	NG	Joints and sleeve yoke sticking or rusted	Repair or replace
OK			
Hydraulic system (Power steering only)	NG	Air in the hydraulic system	Air bleeding
OK			
Control valve lock nut (Power steering only)	NG	Control valve lock nut overtightened	Retighten the lock nut to the specified torque
OK			
Worm shaft bearing preload	NG	Preload too heavy	Adjust the preload
OK			
Steering unit internal parts	NG	Part damage	Replace the damaged parts

2. STEERING VIBRATION AND SHIMMY

Checkpoint		Trouble Cause	Countermeasure
Wheel nuts	NG	Wheel nuts unevenly torqued	Retighten the wheel nuts to the specified torque
OK			
Wheel pins	NG	Broken or loose wheel pin(s)	Retighten or replace the wheel pin(s)
OK			
Tires and disc wheels	NG	Unbalanced tires Deformed disc wheel(s)	Correct the tire balance Replace the disc wheel
OK			
Steering wheel play	NG	Excessive play	Adjust the play
OK			
Front wheel alignment	NG	Front wheels out of alignment	Correct the front wheel alignment
OK			
Steering link joint ball play	NG	Joint ball excessively worn	Replace the joint ball and the ball seat
OK			

Continued on the next page

Continued from the previous page

Checkpoint		Trouble Cause	Countermeasure
Shock absorbers	NG	Faulty shock absorbers	Replace the shock absorbers
OK			
Wheel bearings	NG	Play in bearings excessive or bearings disintegrated	Replace the bearings
OK			
Adjust screw and sector shaft clearance	NG	Excessive clearance	Adjust the clearance
OK			
Sector shaft needle bearing	NG	Needle bearing excessively worn	Replace the needle bearing
OK			
Steering unit internal parts	NG	Part damage	Replace the damaged parts

3. STEERING PULLS TO ONE SIDE OR THE OTHER

Checkpoint		Trouble Cause	Countermeasure
Tire inflation pressure	NG	Tires unevenly inflated	Inflate all the tires to the specified pressure
OK			
Tires and disc wheels	NG	Unbalanced tires Deformed disc wheel(s)	Correct the tire balance Replace the disc wheel
OK			
Wheel bearings	NG	Incorrect preload or damage	Correct or replace
OK			
Shock absorbers	NG	Faulty shock absorbers	Replace the shock absorbers
OK			
Front wheel alignment	NG	Front wheels out of alignment	Correct the front wheel alignment
OK			
Brakes	NG	One wheel dragging	Refer to Section 05A "BRAKE VACUUM ASSISTED HYDRAULIC TYPE"
OK			
Steering shaft end play	NG	Excessive end play	Adjust the end play

4. STEERING WANDER (EXCESSIVE PLAY OR LOOSENESS)

Checkpoint		Trouble Cause	Countermeasure
Tires	NG	Tires badly worn Rounded tire edges	Replace the tires and check the wheel alignment
OK			
Oil level in the reservoir (Power steering only)	NG	Insufficient oil	Replenish the oil
OK			
Manual or power steering unit	NG	Steering unit mounting loose	Tighten the steering unit bolts to the specified torque
OK			
Front wheel alignment (Toe-in)	NG	Front wheels out of alignment (Toe-in out of adjustment)	Correct the front wheel alignment (Adjust the toe-in)
OK			
Steering wheel and shaft	NG	Steering wheel lock nut loose	Tighten the lock nut to the specified torque
OK			
Steering shaft universal joint	NG	Universal joint bolts loose	Tighten the bolts to the specified torque
OK			
Steering linkage joint ball nut	NG	Joint ball nut loose	Tighten the nut to the specified torque
OK			

Continued on the next page

Continued from the previous page

Checkpoint		Trouble Cause	Countermeasure
Pitman arm and sector shaft	NG	Pitman arm nut loose	Tighten the nut to the specified torque
OK			
Front wheel bearings	NG	Bearings excessively worn or preload incorrectly adjusted	Replace the bearings or adjust the preload
OK			
Hydraulic system (Power steering only)	NG	Air in the hydraulic system	Air bleeding
OK			
Worm shaft bearing preload	NG	Preload improperly adjusted	Adjust the preload

5. MOMENTARY INCREASE IN STEERING EFFORT WHEN THE STEERING WHEEL IS TURNED QUICKLY TO ONE SIDE OR THE OTHER (POWER STEERING ONLY)

Checkpoint		Trouble Cause	Countermeasure
Oil level in the reservoir (Power steering only)	NG	Insufficient oil	Replenish the oil
OK			
Oil pump (Power steering only)	NG	Oil pump internal leakage	Repair or replace the oil pump

6. STEERING WHEEL SURGE OR JERK WHEN PARKING THE VEHICLE (POWER STEERING ONLY)

Checkpoint		Trouble Cause	Countermeasure
Oil level in the reservoir (Power steering only)	NG	Insufficient oil	Replenish the oil
OK			
Oil pump pressure	NG	Pressure too low	Adjust the pressure and/or replace the relief valve

7. EXCESSIVE ROAD SHOCK

Checkpoint		Trouble Cause	Countermeasure
Tire inflation pressure	NG	Tires overinflated	Inflate all the tires to the specified pressure
OK			
Suspension	NG	Loose suspension	Repair or replace the applicable parts
OK			
Shock absorbers	NG	Faulty shock absorbers	Replace the shock abosrbers
OK			
Camber angle (4 x 2)	NG	Camber angle incorrectly adjusted	Adjust the camber angle
OK			
Hub bearing preload	NG	Preload out of adjustment	Adjust the preload

8. ABNORMAL NOISE

(1) RATTLING OR CLICKING NOISE IN THE STEERING GEAR

Checkpoint		Trouble Cause	Countermeasure
Manual or power steering unit	NG	Steering unit mounting bolts loose	Tighten the steering unit bolts to the specified torque
OK			
Hydraulic pressure hose (Power steering only)	NG	Hose touching another part of the vehicle	Reposition the hose
OK			
Pitman arm	NG	Pitman arm loose	Tighten the pitman arm nut to the specified torque
OK			
Steering linkage	NG	Steering linkage loose or worn	Repair or replace the steering linkage parts

9. OIL PUMP NOISY

Checkpoint		Trouble Cause	Countermeasure
Oil level	NG	Insufficient	Replenish
OK			
Pressure of air in hydraulic circuit	NG	Air in circuit	Bleed circuit
OK			
Suction tube and filter for restrictions	NG	Restrictions in tubing or filter	Clean or replace
OK			
Oil pump	NG	Defective	Overhaul or replace
OK			
Steering gear box	NG	Defective	Overhaul or replace

DELTA OPEL ISUZU SUZUKI

Index

Torsion bar 4x2

Torsion Bar 4x4

Knuckle 4x2

Knuckle 4x4

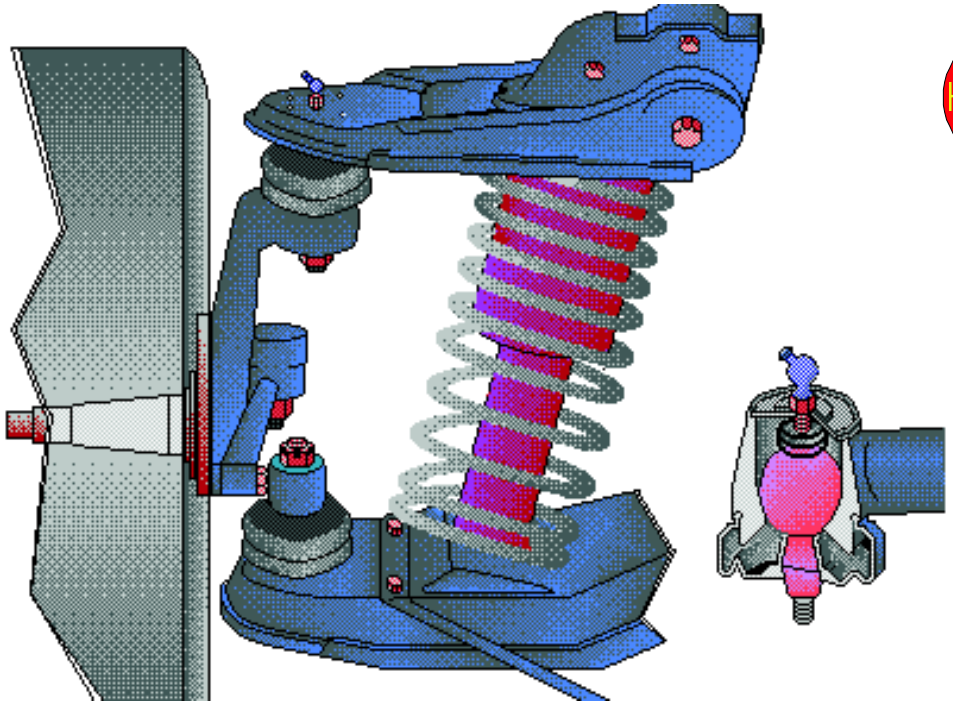

Hi - Tech

KB TF 140
Front Suspension

ISUZU

SECTION 3C
FRONT SUSPENSION

TABLE OF CONTENTS

	PAGE
Main Data and Specifications	3C— 2
Torque Specifications	3C— 4
Special Parts Fixing Nuts and Bolts	3C— 4
Front Suspension	3C— 8
General Description	3C— 8
Torsion Bar, Strut Bar, Stabilizer Bar and Shock Absorber (4 x 2)	3C—10
Disassembly	3C—10
Inspection and Repair	3C—12
Reassembly	3C—13
Torsion Bar, Stabilizer Bar and Shock Absorber (4 x 4)	3C—17
Disassembly	3C—17
Inspection and Repair	3C—19
Reassembly	3C—20
Knuckle, Upper Link and Lower Link (4 x 2)	3C—23
Disassembly	3C—23
Inspection and Repair	3C—25
Reassembly	3C—26
Knuckle, Upper Link and Lower Link (4 x 4)	3C—29
Disassembly	3C—29
Inspection and Repair	3C—32
Reassembly	3C—33
Troubleshooting	3C—38

MAIN DATA AND SPECIFICATIONS

4 x 2 Model

Front Suspension Type		Independent wishbone arms. Torsion bar springs with stabilizer bar.		
		Short wheel base	Long wheel base	
			Except Flat Deck	Flat Deck
Front Wheel Alignment				
When not loaded				
Tread	mm(in)	1445 (56.88)		
Camber		0°30' ± 60' (Left and right side to be equal within 45')		
Caster		*1°35' ± 45'	*1°50' ± 45'	*1°10' ± 45'
		* Left and right side to be equal within 35'		
Toe-in	mm(in)	2 ± 2 (0.08 ± 0.08)		
Kingpin inclination		10° ± 60'		
Torsion Bar Spring Data				
Petrol Engine Model (Except for Australia)				
Length x Diameter	mm(in)	1006 x 23.8 (39.61 x 0.937)		
Wheel Rate/Side	kg/mm(lb/in/N/mm)	2.36 (132/23.14)		
Spring Constant	kg•m/deg(lb.ft/deg/N•m/deg)	4.45 (32.18/43.64)		
Spring Capacity	kg(lb/N)	430 (948/4217)		
Diesel Engine Model and Petrol Engine Model for Australia				
Length x Diameter	mm(in)	1006 x 24.4 (39.61 x 0.961)		
Wheel Rate/Side	kg/mm(lb/in/N/mm)	2.55 (143/25.0)		
Spring Constant	kg•m/deg(lb.ft/deg/N•m/deg)	4.90 (35.44/48.06)		
Spring Capacity	kg(lb/N)	475 (1047/4658), For Australia 525 (1157/5148)		
Shock Absorber Data				
Maximum Length	mm(in)	325 (12.80)		
Minimum Length	mm(in)	210 (8.27)		
Stroke	mm(in)	115 (4.53)		
Damping Force				
Rebound Side		240 kg at 0.3 m/sec. (2400 N at 0.3 m/sec.)		
Compression Side		70 kg at 0.3 m/se. (700 N at 0.3 m/sec.)		
Shock Absorber Data (For Australia)				
Maximum Length	mm(in)	328 (12.91)		—
Minimum Length	mm(in)	213 (8.39)		—
Stroke	mm(in)	115 (4.53)		—
Damping Force				
Rebound Side		215 kg at 0.3 m/sec. (474 lb. at 11.8 in/sec./2108 N at 0.3m/sec.)		—
Compression Side		118 kg at 0.3 m/sec. (26.0 lb. at 11.8 in/sec./1157 N at 0.3m/sec.)		—

4 x 4 Model

Front Suspension Type		Independent wishbone arms. Torsion bar springs with stabilizer bar.	
		Short wheel base	Long wheel base
Front Wheel Alignment			
When not loaded			
Tread	mm(in)	1438 (56.61)	
Camber		0°30' ± 60' (Left and right side to be equal within 45')	
Caster		*1°55' ± 45'	*2°50' ± 45'
		* Left and right side to be equal within 35'	
Toe-in	mm(in)	2 ± 2 (0.08 ± 0.08)	
Kingpin inclination		10° ± 60'	
Torsion Bar Spring Data			
Length x Diameter	mm(in)	998 x 23.4 (39.29 x 0.321)	
Wheel Rate/Side	kg/mm(lb/in/N/mm)	3.33 (186/32.6)	
Spring Constant	kg•m/deg(lb.ft/deg/N•m/deg)	4.20 (30.4/41.2)	
Spring Capacity	kg(lb/N)	Petrol engine 500 (1102/4903), Diesel engine 550 (1212/5393)	
Shock Absorber Data			
Type		Hydraulic double acting, telescopic	
Maximum Length	mm(in)	375 (14.76)	
Minimum Length	mm(in)	235 (9.25)	
Stroke	mm(in)	140 (5.51)	
Damping Force			
Rebound Side		240 kg at 0.3 m/sec. (2400 N at 0.3 m/sec.)	
Compression Side		70 kg at 0.3 m/se. (700 N at 0.3 m/sec.)	
Shock Absorber Data (For Australia)			
Type		Gas-sealed, hydraulic double acting telescopic	
Maximum Length	mm(in)	377 (14.84)	
Minimum Length	mm(in)	237 (9.33)	
Stroke	mm(in)	140 (5.51)	
Damping Force			
Rebound Side		200 kg at 0.3 m/sec. (441 lb. at 11.8 in/sec./1961 N at 0.3m/sec.)	
Compression Side		138 kg at 0.3 m/sec. (304 lb. at 11.8 in/sec./1353 N at 0.3m/sec.)	

TORQUE SPECIFICATIONS

SPECIAL PARTS FIXING NUTS AND BOLTS

4 x 2 Model kg·m(lb.ft/N·m)

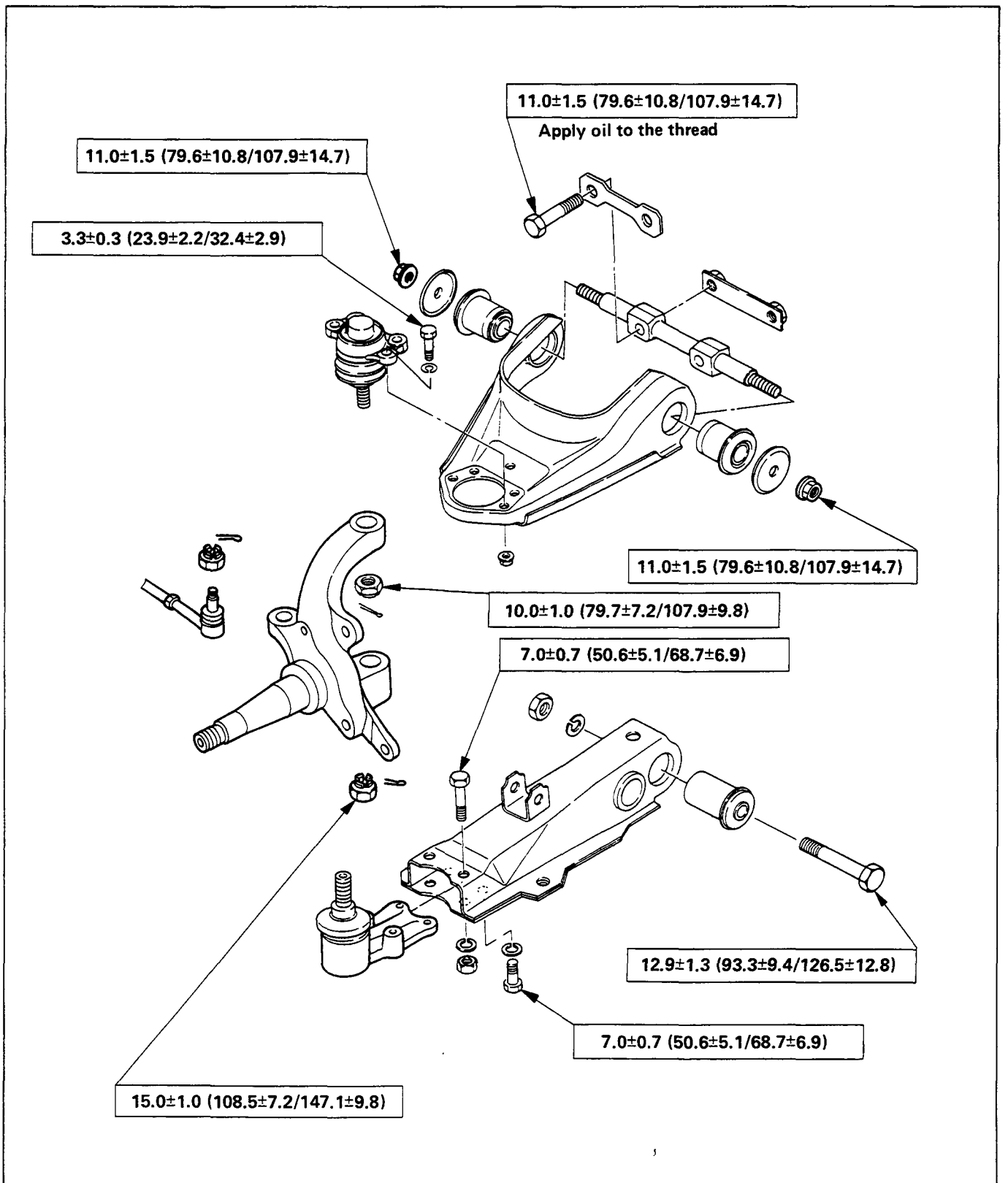

4 x 2 Model

kg·m(lb.ft/N·m)

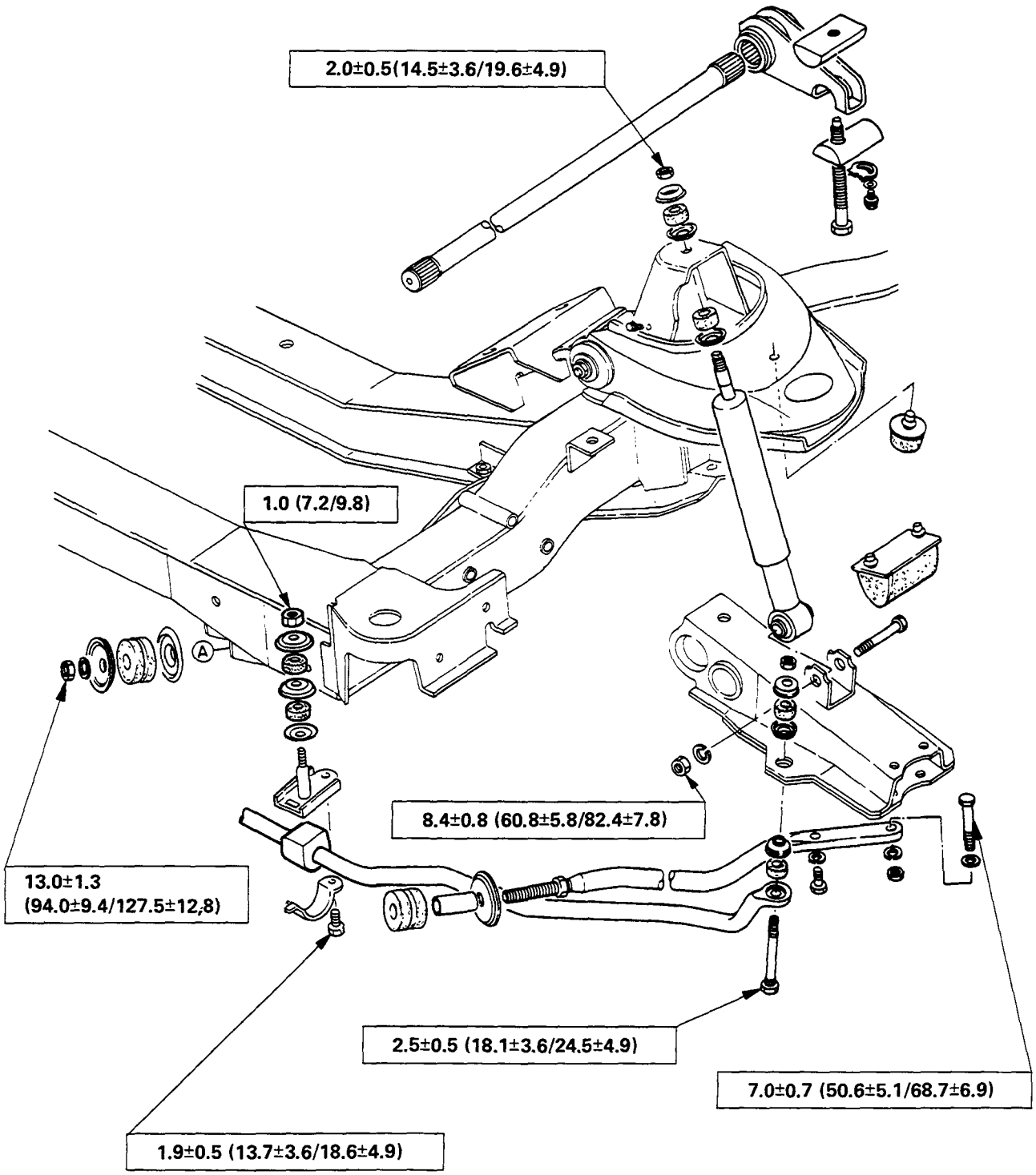

4 x 4 Model

kg·m(lb.ft/N·m)

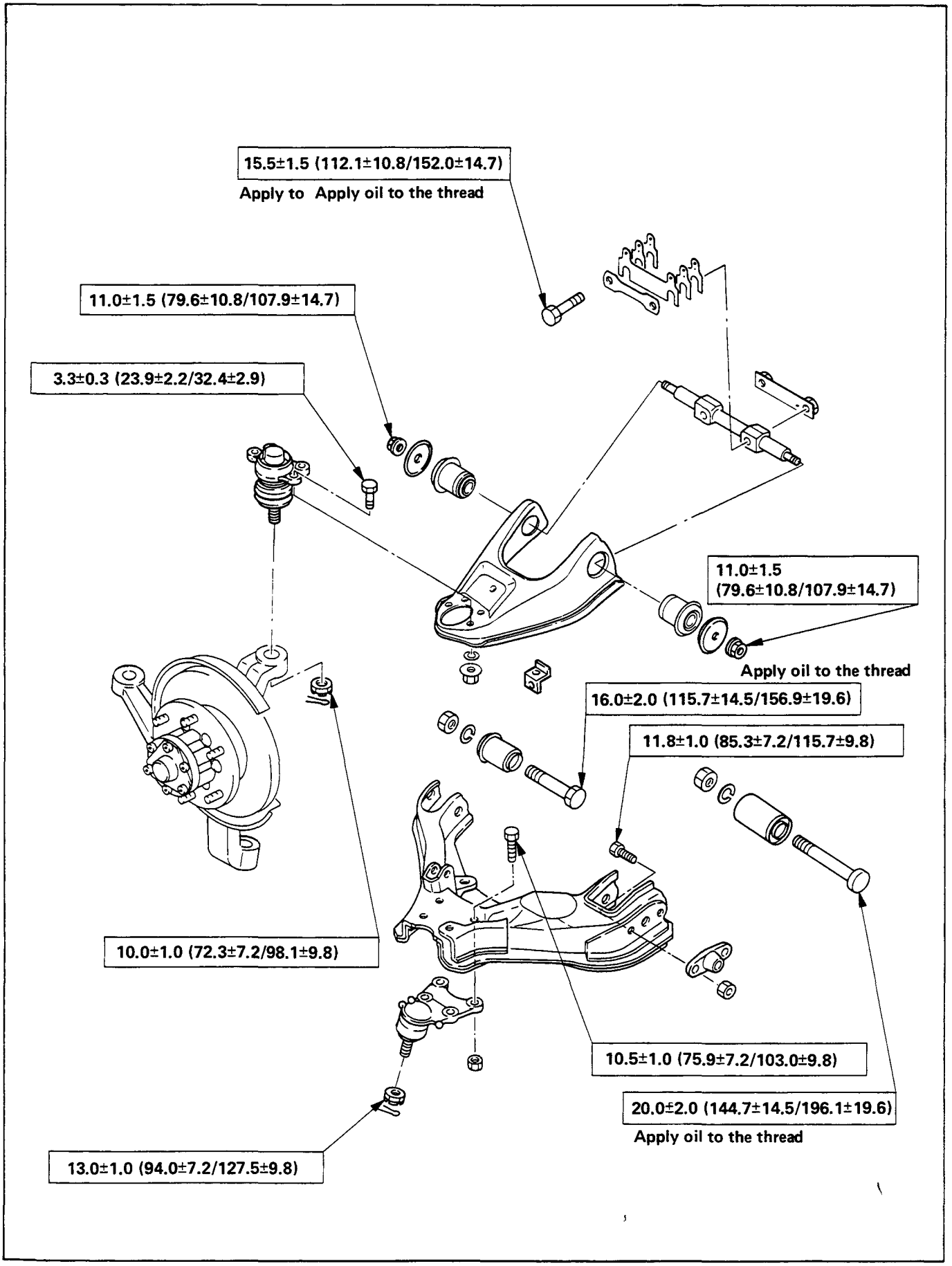

4 x 4 Model

kg·m(lb.ft/N·m)

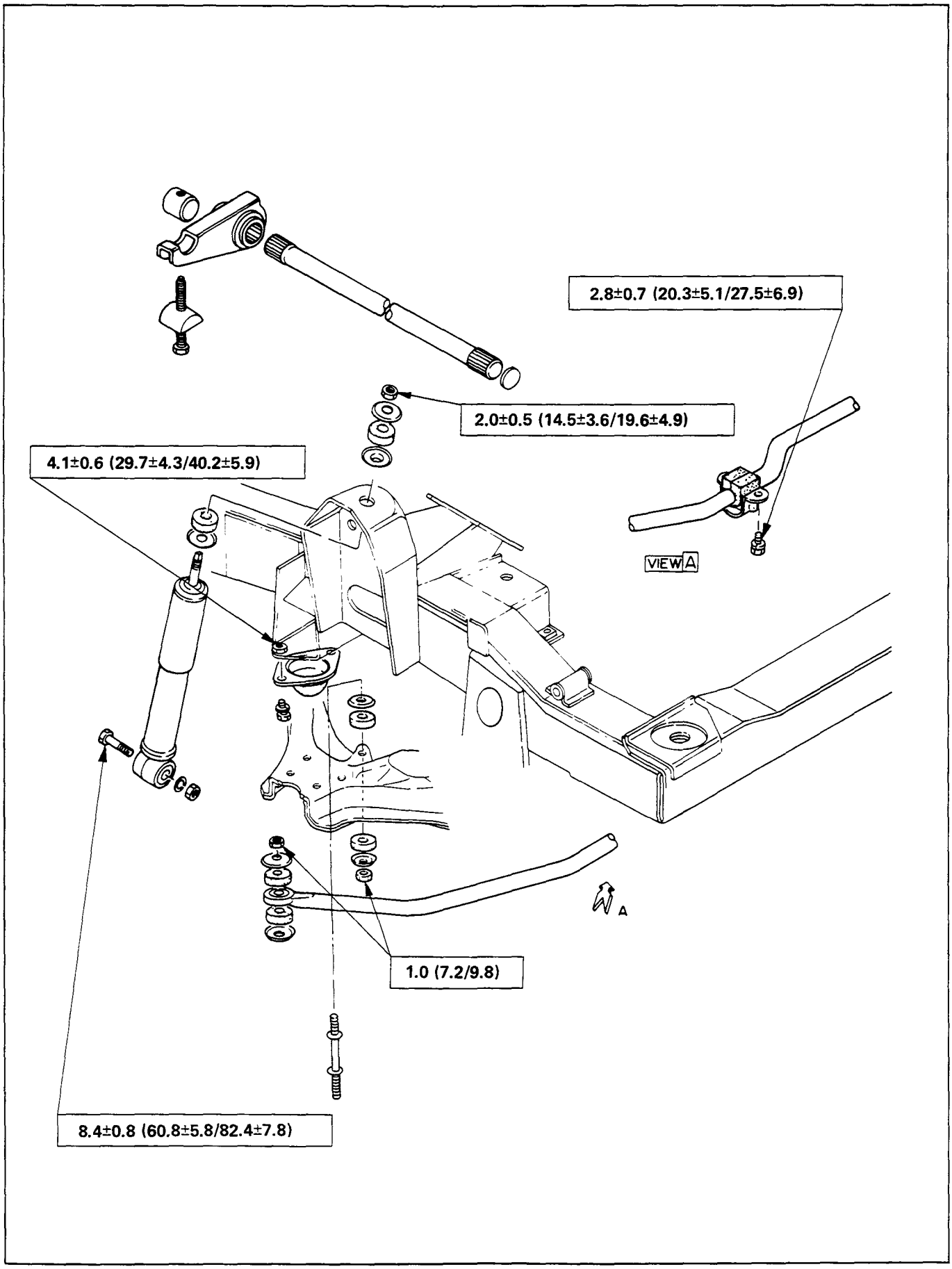

FRONT SUSPENSION

GENERAL DESCRIPTION

4 x 2 Model **kg·m(lb.ft/N·m)**

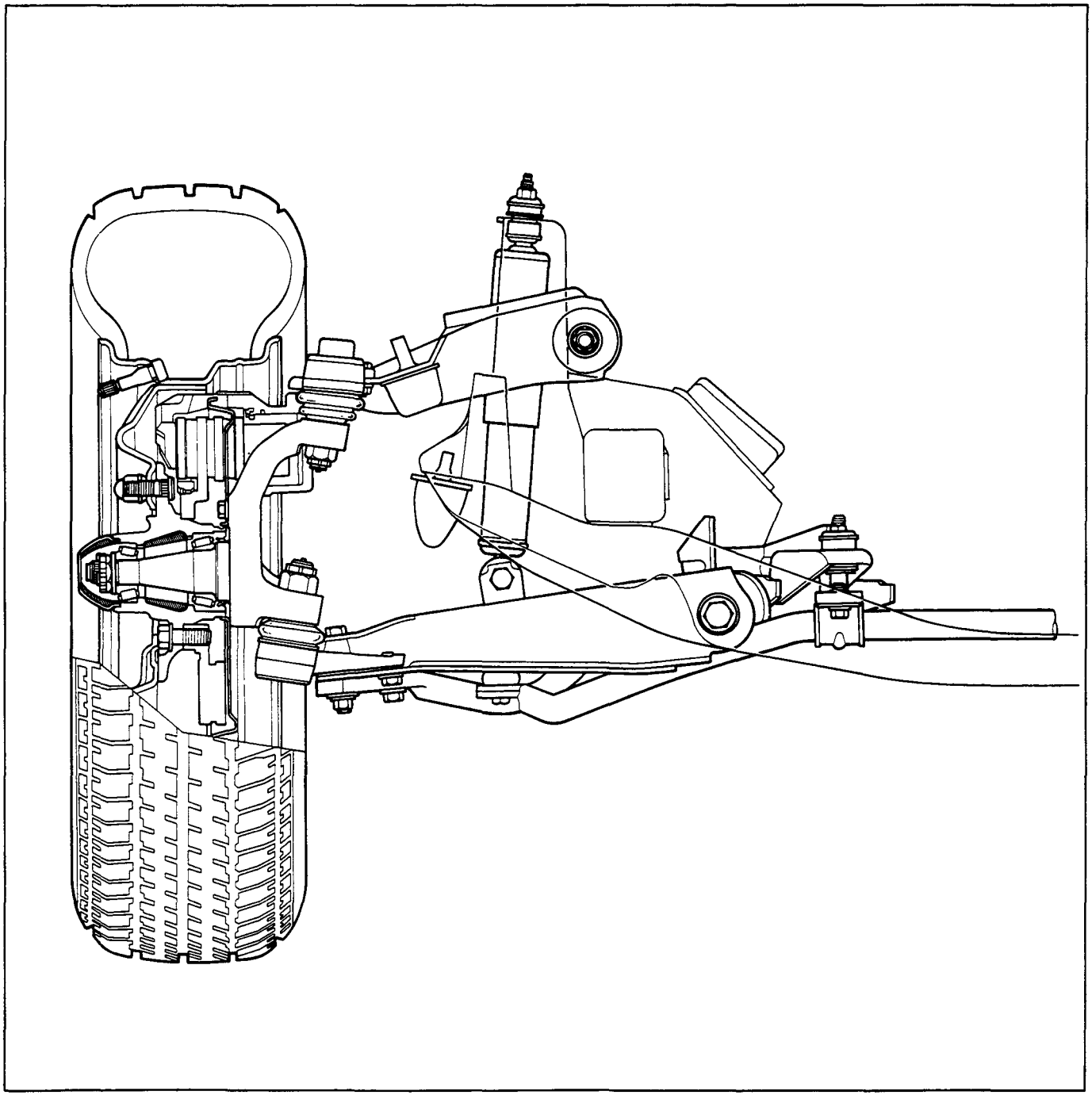

4 x 4 Model

kg·m(lb.ft/N·m)

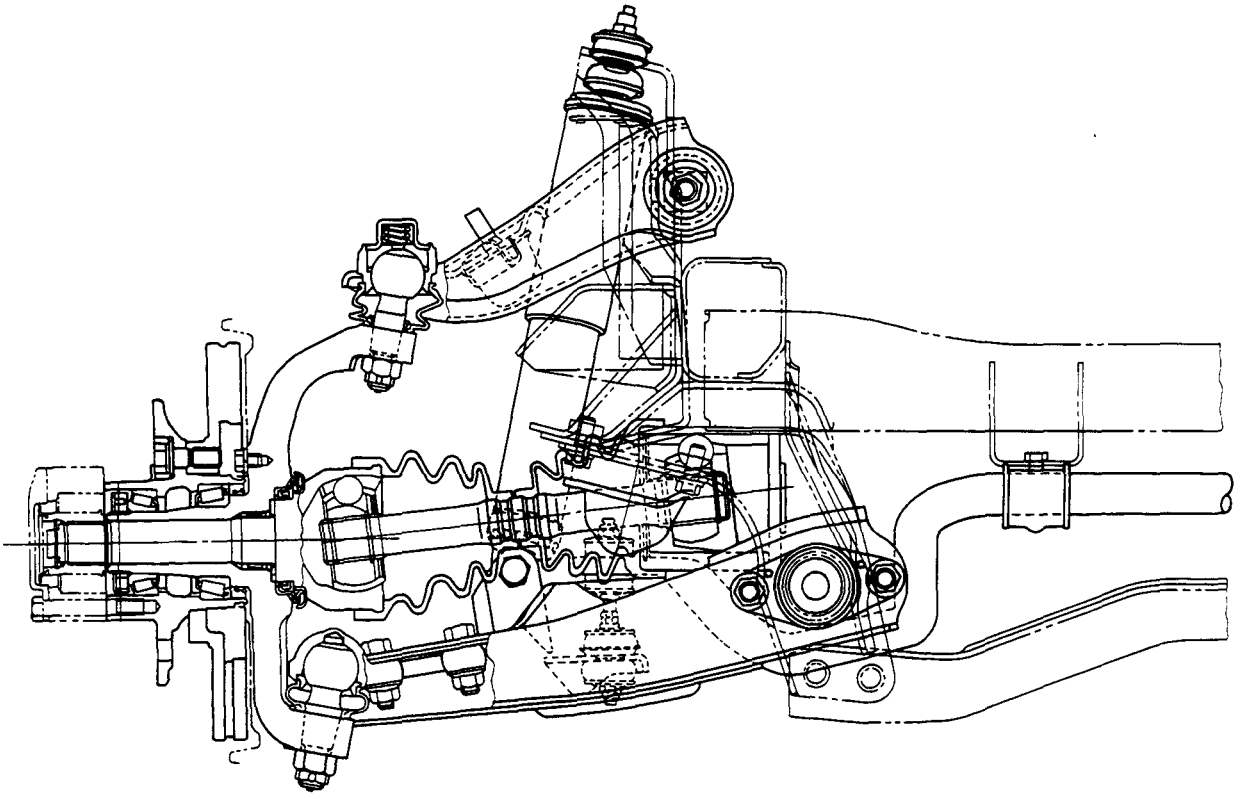

The links attach to the vehicle with bolts and bushings at their inner pivot points and to the steering knuckle, which is part of the front wheel spindle, at their outer points.

The knuckle is mounted to the upper and lower links each of which has a ball joint to permit pivoting of the knuckle for steering operation. The hub is supported in position on the knuckle spindle by means of the two bearings and the rotor is mounted to the hub.

The front suspension is an independent type utilizing torsion bar springs. The torsion bar spring has splines on each end. Height control is provided on the third crossmember. Both the upper and lower links are pressed steel and the torsion bar is supported at the ends by lower link in front and by height control arm in rear.

TORSION BAR, STABILIZER BAR AND SHOCK ABSORBER

DISASSEMBLY

4 x 2 Model

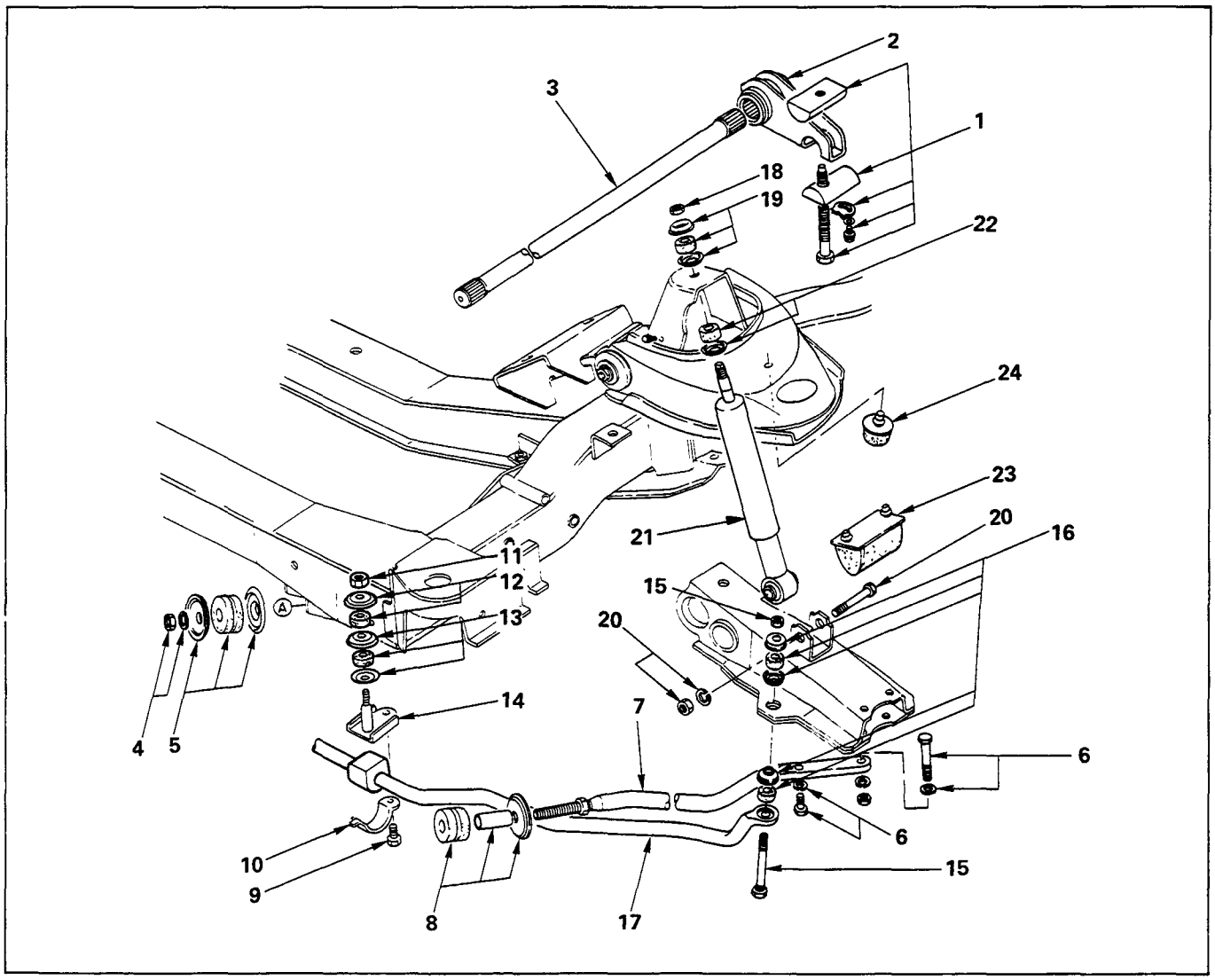

Disassembly Steps

Torsion Bar

▲ 1. Adjust bolt, seat, lock plate and bolt
▲ 2. Height control arm
▲ 3. Torsion bar

Strut Bar

4. Nut and washer
5. Rubber bushing and washer
6. Bolt and washer
7. Strut bar
8. Rubber bushing, washer and tube

Stabilizer Bar

9. Bolt
10. Bracket
11. Nut
12. Rubber bushing and washer
13. Rubber bushing and washer
14. Bracket
15. Bolt and nut
16. Rubber bushing and washer
17. Stabilizer bar

Shock Absorber

18. Nut
19. Rubber bushing and washer
20. Bolt, nut, and washer
▲ 21. Shock absorber
22. Rubber bushing and washer
23. Lower link bumper
24. Upper link bumper

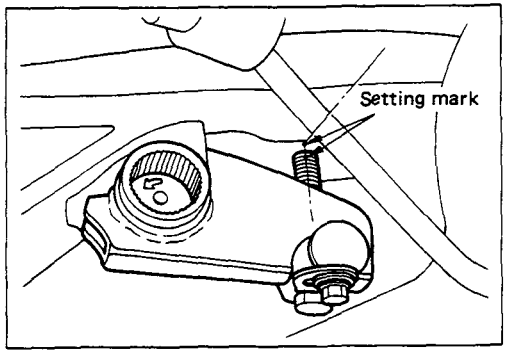

Important Operations

1. Adjust Bolt

Apply the setting marks to the adjust bolt and height control arm.

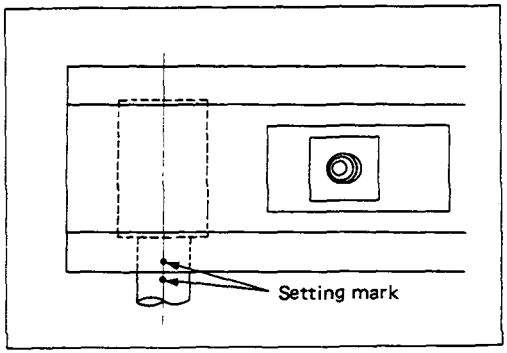

2. Height Control Arm

Apply the setting marks to the height control arm and torsion bar.

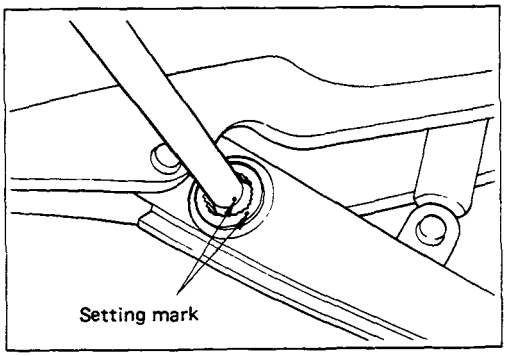

3. Torsion Bar

Apply the setting marks to the torsion bar and lower link.

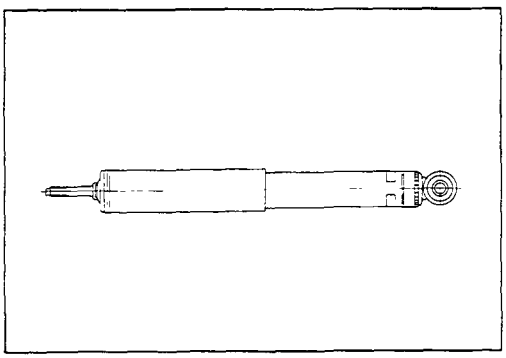

21. Shock Absorber (For Australia)

CAUTION:

The shock absorbers have been charged with gas at the factory. Exposure to high temperatures or an open flame can result in a dangerous explosion.

Keep the shock absorbers away from high temperatures and open flames.

INSPECTION AND REPAIR

Make all necessary adjustments, repairs, and part replacements if wear, damage, or other problems are discovered during inspection.

- Torsion bar, height control arm
- Strut bar
- Stabilizer bar
- Shock absorber
- Rubber bushing

Visual Check

Inspect the following parts for wear, damage or other abnormal conditions.

REASSEMBLY

4 x 2 Model

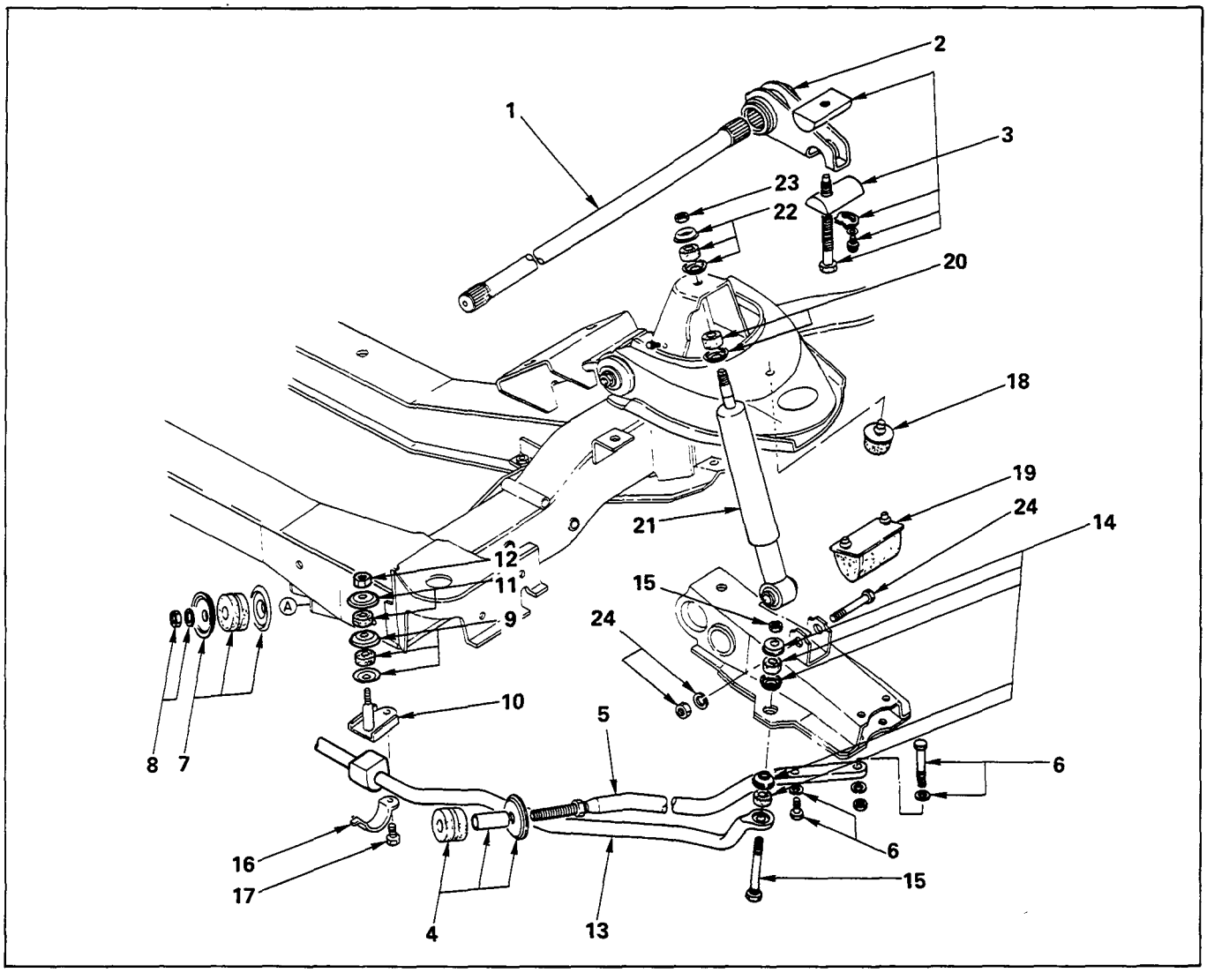

Reassembly Steps

Torsion Bar

- ▲ 1. Torsion bar
- ▲ 2. Height control arm
- ▲ 3. Adjustment bolt, seat, lock plate and bolt

Strut Bar

- 4. Rubber bushing, washer and tube
- ▲ 5. Strut bar
- ▲ 6. Bolt and washer
- 7. Rubber bushing and washer
- ▲ 8. Nut and washer

Stabilizer Bar

- 9. Rubber bushing and washer
- 10. Bracket
- 11. Rubber bushing and washer
- 12. Nut
- 13. Stabilizer bar
- 14. Rubber bushing and washer
- ▲ 15. Bolt and nut
- 16. Bracket
- 17. Bolt

Shock Absorber

- 18. Upper link bumper
- 19. Lower link bumper
- 20. Rubber bushing and washer
- 21. Shock absorber
- 22. Rubber bushing and washer
- ▲ 23. Nut
- ▲ 24. Bolt, nut and washer

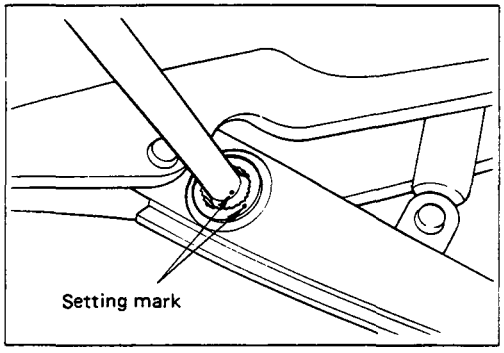

Important Operations

1. Torsion Bar

(1) Apply grease to the serrated portions.

(2) Align the scribe marks.

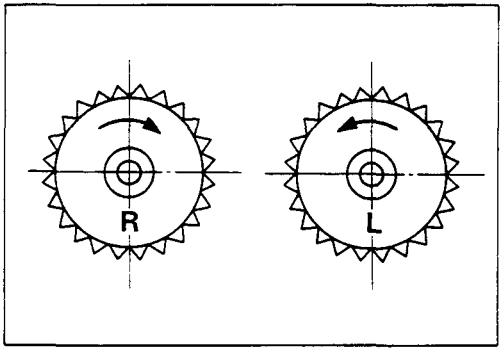

(3) Note the embossed mark on the end of the torsion-bar.

R : Right side
L : Left side

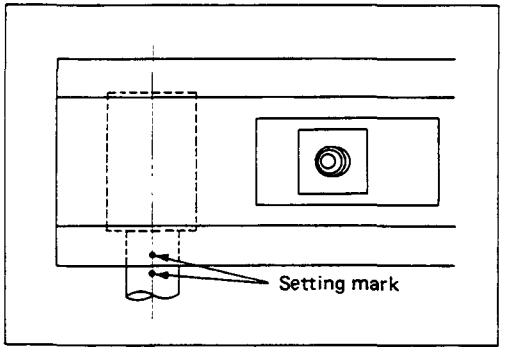

2. Height Control Arm

(1) Apply grease to the portion that fits into the bracket.

(2) Align the scribe marks.

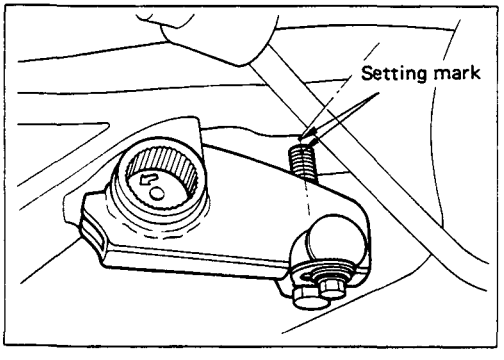

3. Adjust Bolt, Seat, Lock Plate and Bolt

(1) Turn in the adjustment bolt to location marked upon disassembly.

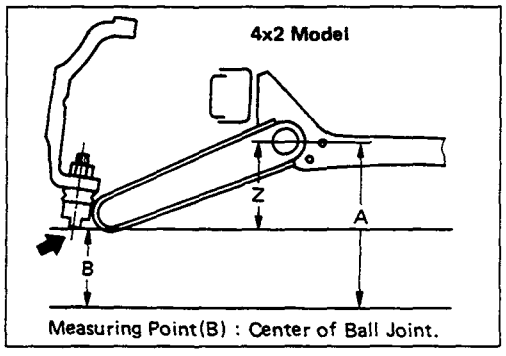

(2) Check the vehicle trim height
Trim Height (Z) = A - B

	mm(in)	Wheel size
4 x 2	56 (2.20)	14" Wheels
4 x 2	68 (2.68)	15" Wheels
4 x 4	130 (5,12)	15/16" Wheels

Difference in trim height L/hand to R/hand side should be 3mm (≤).

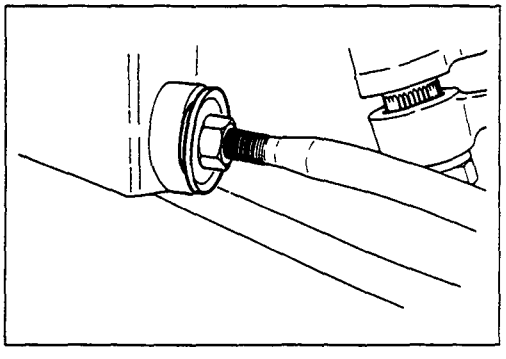

5. Strut Bar

Adjust the caster angle by varying length of the strut bar (adjust with lock nut).

Caster	
Short Wheel Base	1°35' ± 45'
Long (Except Flat Deck)	1°50' ± 45'
Long (Flat Deck)	1°10' ± 45'

Note:

No more than 35' side to side variation.

6. Bolt, Nut and Washer

Strut Bar Bolt Torque	kg•m (lb.ft/N•m)
7.0 ± 0.7 (50.6 ± 5.1/68.7 ± 6.9)	

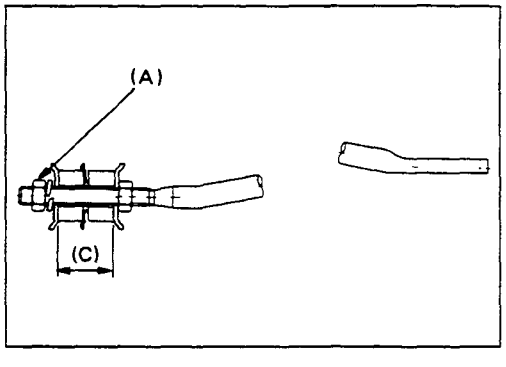

8. Nut and Washer

Strut Bar Nut Torque

Model	Torque kg.m (lb.ft/N.m)	Distance (C) mm(in)
4 x 2	13.0 ± 1.3 (94.0 ± 9.4/127.5 ± 12.8)	56.0 (63.3)

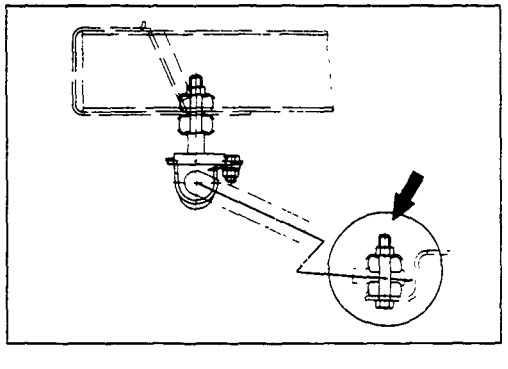

15. Bolt and Nut

Stabilizer Bar Bolt Torque	kg•m (lb.ft/N•m)
2.5 ± 0.5 (18.1 ± 3.6/24.5 ± 4.9)	

23. Nut

Shock Absorber Nut Torque	kg·m(lb.ft/N·m)
2.0 ±0.5 (14.5 ±3.6/19.6 ±4.9)	

24. Bolt, Nut and Washer

Shock Absorber Bolt Torque	kg·m(lb.ft/N·m)
8.4 ±0.8 (60.8 ±5.8/82.4 ±7.8)	

TORSION BAR, STABILIZER BAR AND SHOCK ABSORBER

DISASSEMBLY

4 x 4 Model

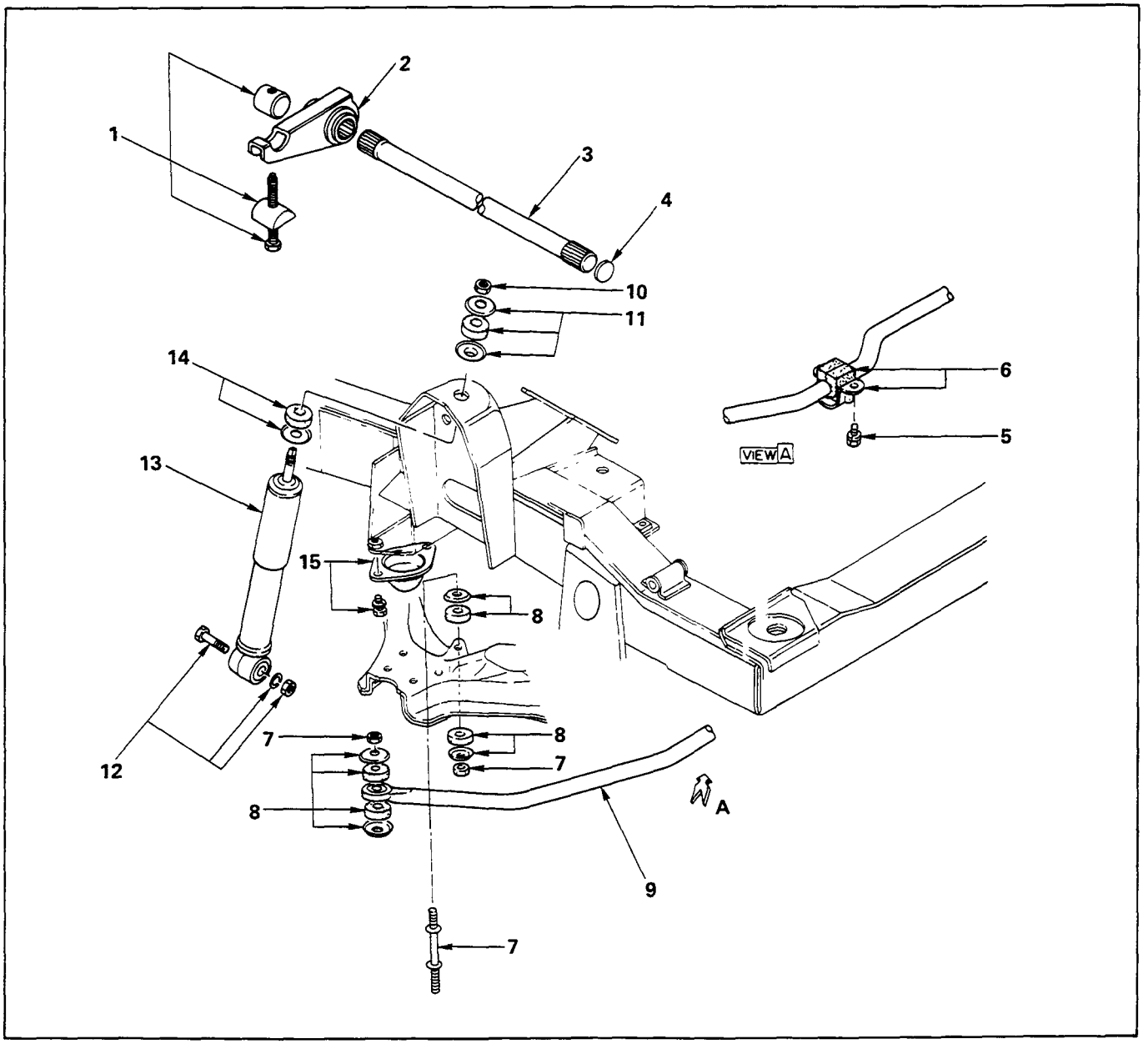

Disassembly Steps

Torsion Bar

- ▲ 1. Adjust bolt and seat
- ▲ 2. Height control arm
- ▲ 3. Torsion bar
- 4. Rubber seat

Stabilizer Bar

5. Bolt
6. Bracket and rubber bushing
7. Bolt, nut, and washer
8. Rubber bushing and washer
9. Stabilizer bar

Shock Absorber

10. Nut
11. Rubber bushing and washer
12. Bolt, nut, and washer
13. Shock absorber
14. Rubber bushing and washer
15. Lower link bumper

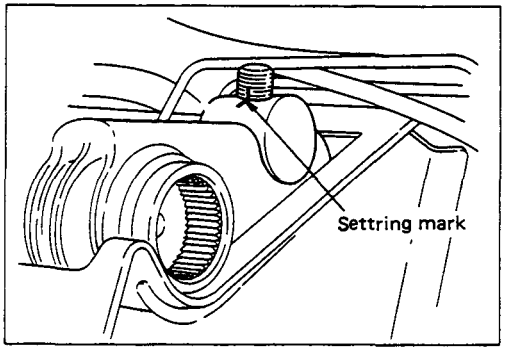

Important Operations

1. Adjust Bolt

Apply the setting marks to the adjust bolt and height control arm.

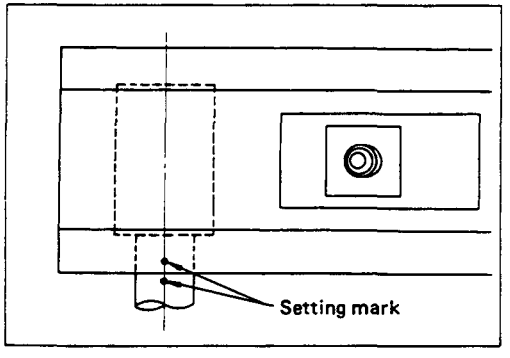

2. Height Control Arm

Apply the setting marks to the height control arm and torsion bar.

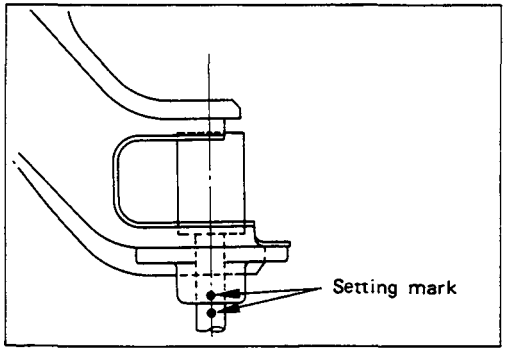

3. Torsion Bar

Apply the setting marks to the torsion bar and lower link.

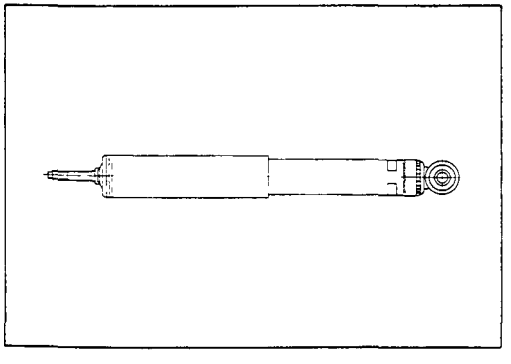

13. Shock Absorber (For Australia)

CAUTION:

The shock absorbers have been charged with gas at the factory. Exposure to high temperatures or an open flame can result in a dangerous explosion.

Keep the shock absorbers away from high temperatures and open flames.

INSPECTION AND REPAIR

Make all necessary adjustments, repairs, and part replacements if wear, damage, or other problems are discovered during inspection.

- Torsion bar, height control arm
- Strut bar
- Stabilizer bar
- Shock absorber
- Rubber bushing

Visual Check

Inspect the following parts for wear, damage or other abnormal conditions.

REASSEMBLY

4 x 4 Model

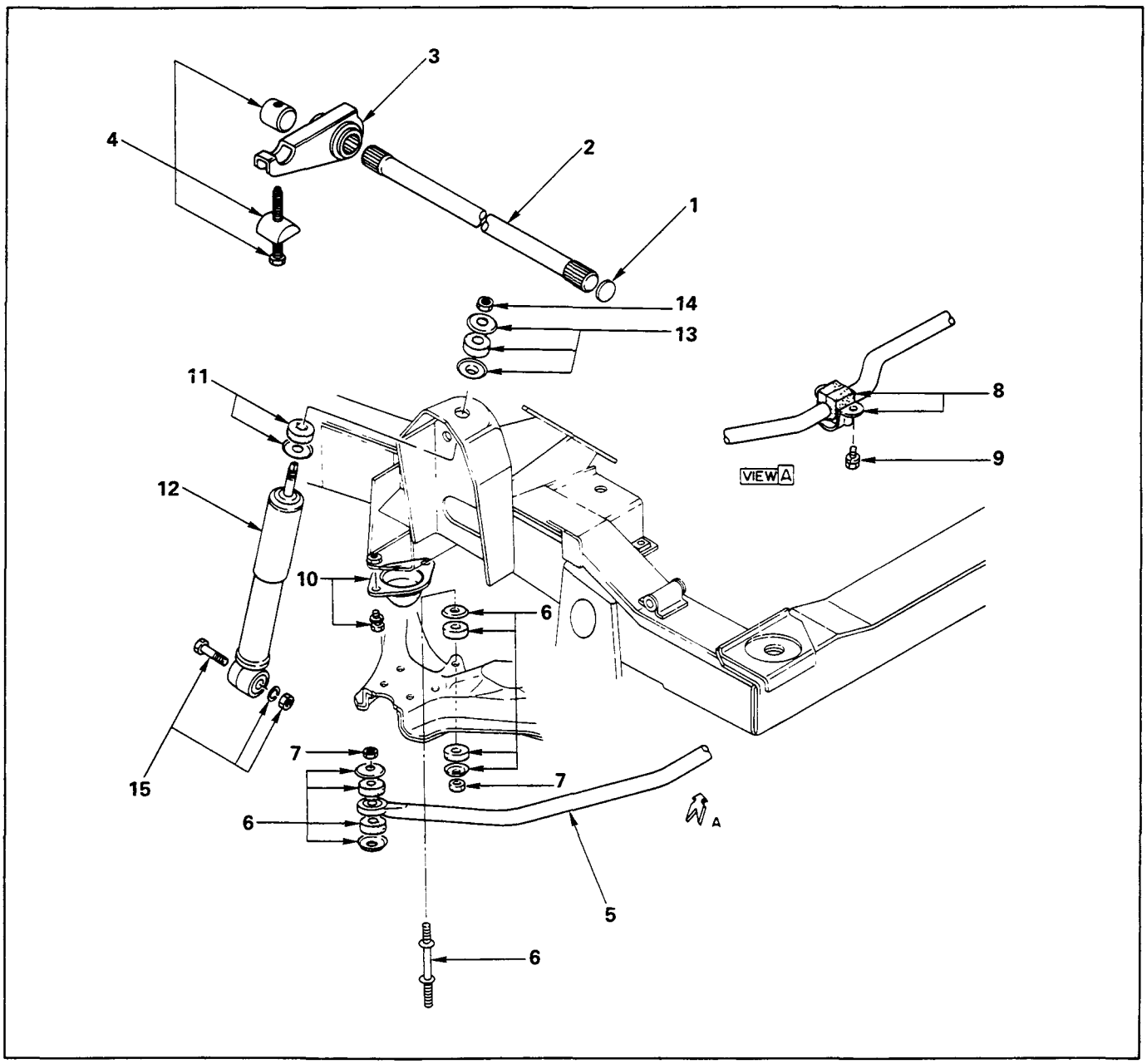

Reassembly Steps

Torsion Bar

1. Rubber Seat
▲ 2. Torsion Bar
▲ 3. Height Control Arm
▲ 4. Adjust Bolt and Seat

Stabilizer Bar

5. Stabilizer bar
6. Rubber bushing, bolt and washer
▲ 7. Nut
8. Bracket
9. Bolt

Shock Absorber

10. Lower link bumper
11. Rubber bushing and washer
12. Shock absorber
13. Rubber bushing and washer
▲ 14. Nut
▲ 15. Bolt, nut, and washer

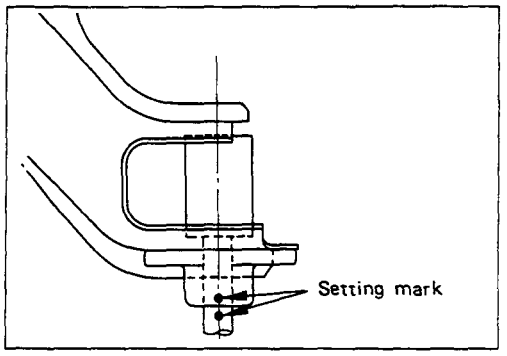

Important Operations

2. Torsion Bar

(1) Apply grease to the serrated portions.

(2) Align the setting marks.

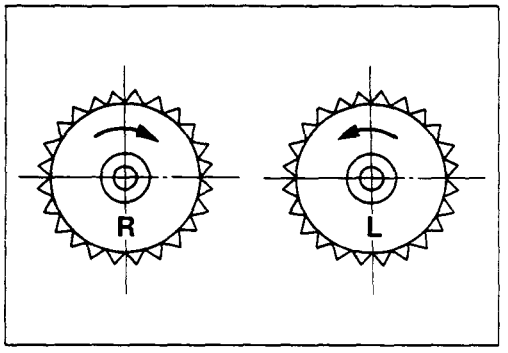

(3) Note the emboss mark on its side face.
R : Right side
L : Left side

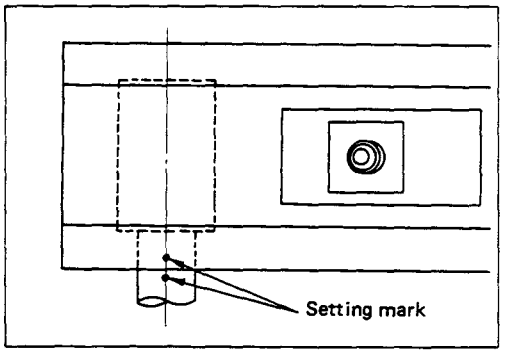

3. Height Control Arm

(1) Apply grease to the portion that fits into the bracket.

(2) Align the setting marks.

(3) Apply grease to the bolt portion of the end piece.

(4) Apply grease to the portion of the seat that fits in to the bracket.

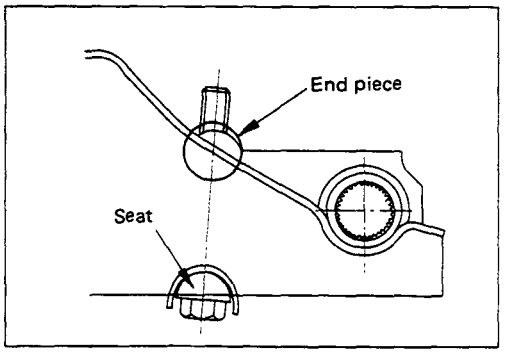

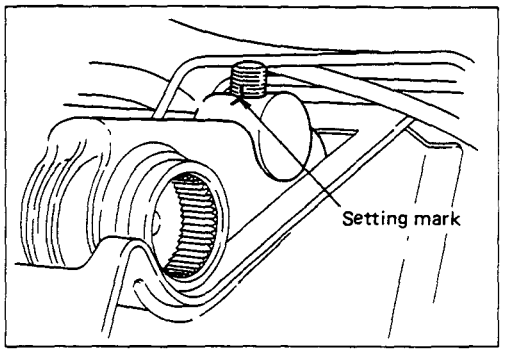

4. Adjust Bolt

(1) Turn in the adjust bolt to location marked during disassembly.

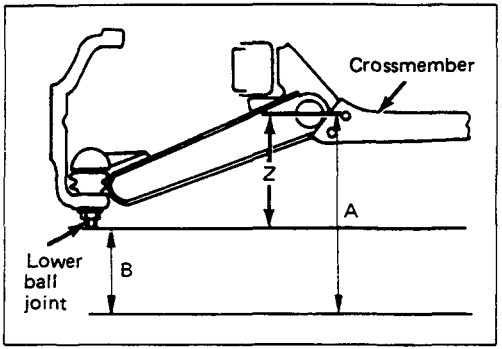

(2) Check the vehicle trim height.
Trim height (Z) = A — B

Trim Height	mm(in)
130 (5.12)	

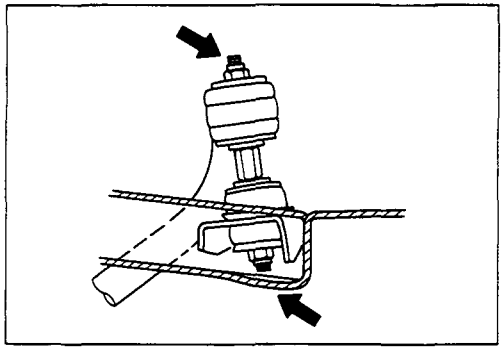

7. Bolt

Stabilizer Bar Bolt Torque	kg·m(lb.ft/N·m)
1.0 (7.2/9.8)	

14. Nut

Shock Absorber Nut Torque	kg·m(lb.ft/N·m)
2.0 ±0.5 (14.5 ±3.6/19.6 ±4.9)	

15. Bolt

Shock Absorber Bolt
8.4 ±0.8 (60.8 ±5.8/82.4 ±7.8)

KNUCKLE, UPPER LINK AND LOWER LINK

DISASSEMBLY

4 x 2 Model

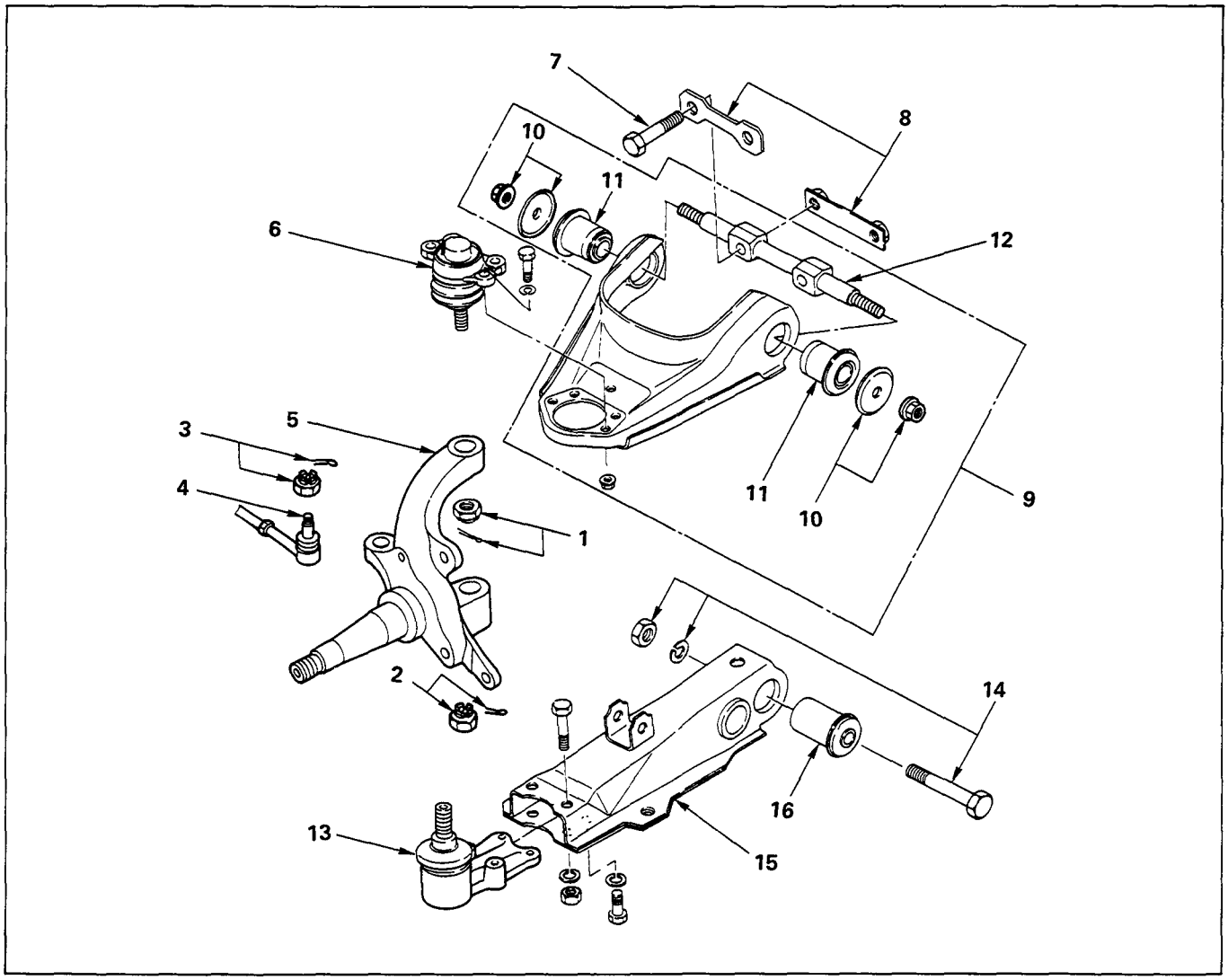

Disassembly Steps

Knuckle

1. Nut and cotter pin
2. Nut and cotter pin
3. Nut and cotter pin
4. Steering link end
5. Knuckle

Upper Link

6. Upper end
7. Bolt and washer
8. Nut Assembly
9. Upper link assembly
10. Nut and plate
▲ 11. Bushing
12. Fulcrum pin

Lower Link

13. Lower end
14. Bolt, nut and washer
▲ 15. Lower link assembly
▲ 16. Bushing

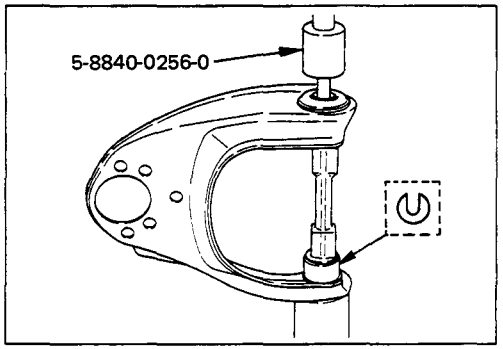

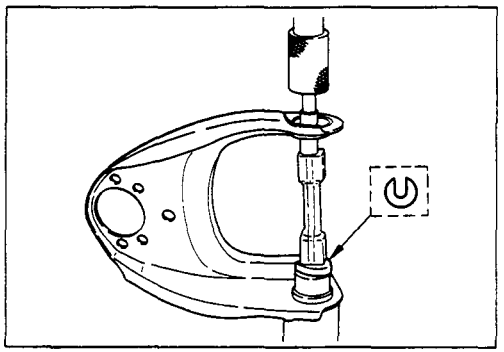

Important Operations

11. Bushing

Remover and installer : 5-8840-0256-0
(J-29755)

15. Lower Link Assembly

Before removal, remove the torsion bar, strut bar, stabilizer bar and shock absorber.

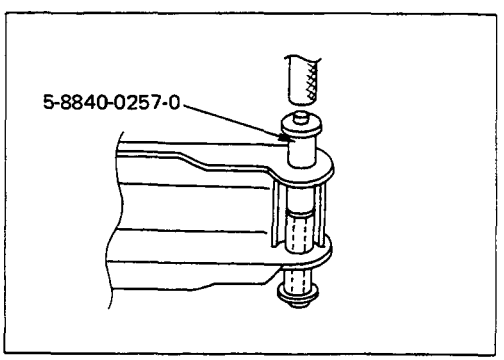

16. Bushing

Remover and installer : 5-8840-0257-0
(J-29756)

INSPECTION AND REPAIR

Make necessary correction or parts replacement if wear, damage or any other abnormal conditions are found through inspection.

- Knuckle, Knuckle arm
- Upper link, lower link, bushing
- Upper end, lower end, boot
- Fulcrum pin

Visual Check

Inspect the following parts for wear, damage or other abnormal conditions.

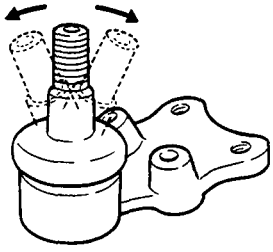

Upper Link End and Lower Link End

Inspect the upper and lower link end boot for damage or grease leak.

Move the Ball Joint as shown in the Figure, then confirm its normal movement.

Inspect screw/taper area of Ball Joint for defects.

If any defects are found by the above inspections, replace the end assembly with new one.

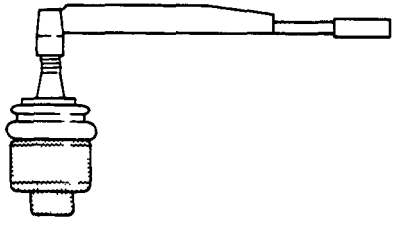

After moving the Ball Joint 4 or 5 times, attach nuts then measure the preload.

Preload	kg·m(lb.ft/N·m)
Upper link end	0.1–0.33 (0.7–2.4/0.9–3.2)
Lower link end	0.05–0.35 (0.35–2.5/0.5–3.4)

If the above limits specified are exceeded, replace the end assembly.

REASSEMBLY

4 x 2 Model

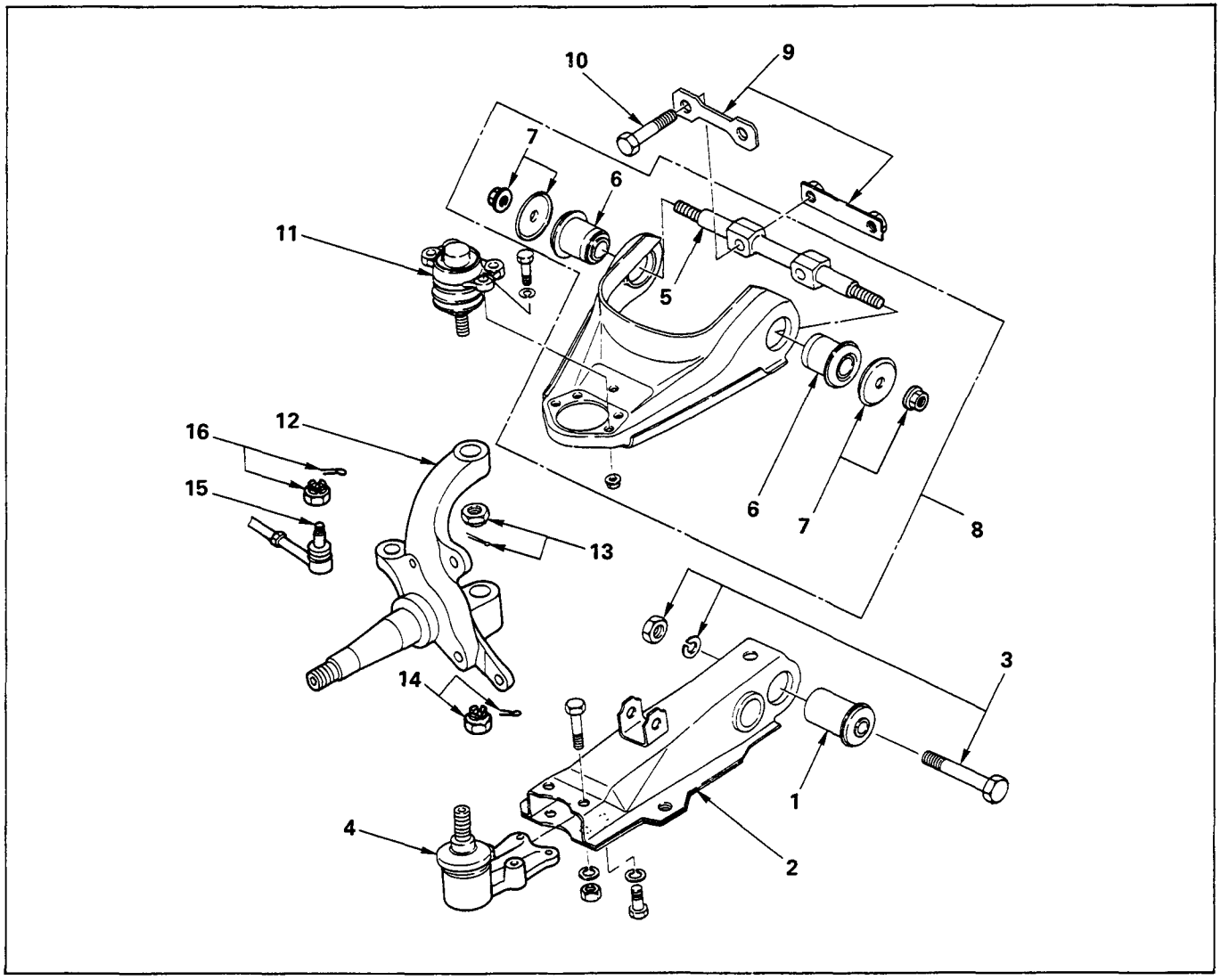

Reassembly Steps

Lower Link

- ▲ 1. Bushing
- 2. Lower link assembly
- ▲ 3. Bolt, nut and washer
- ▲ 4. Lower end

Upper Link

- ▲ 5. Fulcrum pin
- ▲ 6. Bushing
- ▲ 7. Plate and nut
- 8. Upper link assembly
- 9. Nut assembly
- ▲ 10. Bolt and washer
- ▲ 11. Upper end

Knuckle

- 12. Knuckle
- ▲ 13. Nut and cotter pin
- ▲ 14. Nut and cotter pin
- 15. Steering link end
- ▲ 16. Nut and cotter pin

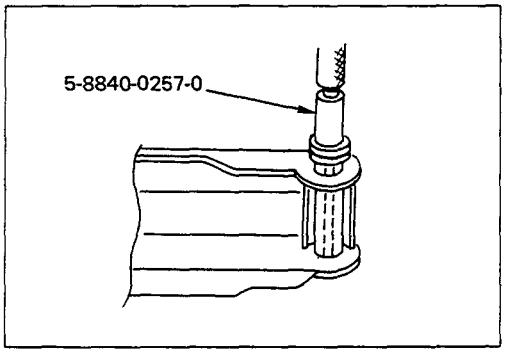

Important Operations

1. Bushing

Remover and Installer : 5-8840-0257-0
(J-29756)

3. Bolt, Nut and Washer

Tighten lower link nut finger-tight.

Perform the secure tightening after adjusting buffer clearance.

4. Lower End

Lower End Bolt Torque	kg·m(lb.ft/N·m)
7.0 ±0.7 (50.6 ±5.1/68.7 ±6.9)	

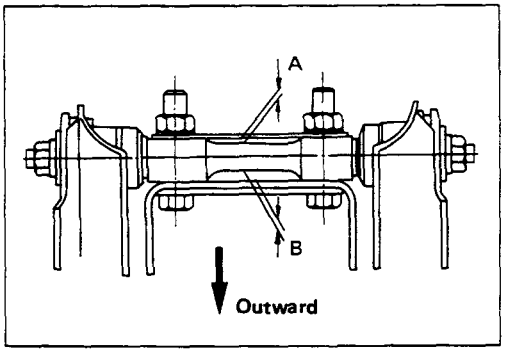

5. Fulcrum Pin

Install the smaller clearance A to be inside and larger clearance B outside of vehicle.

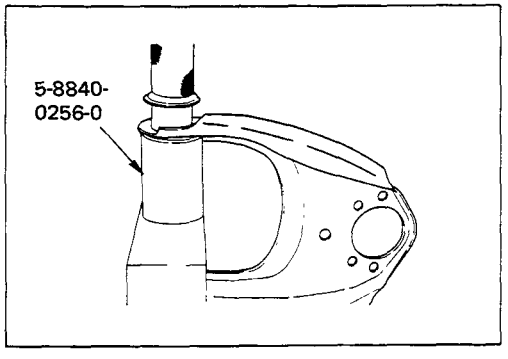

6. Bushing

Remover and Installer : 5-8840-0256-0
(J-29755)

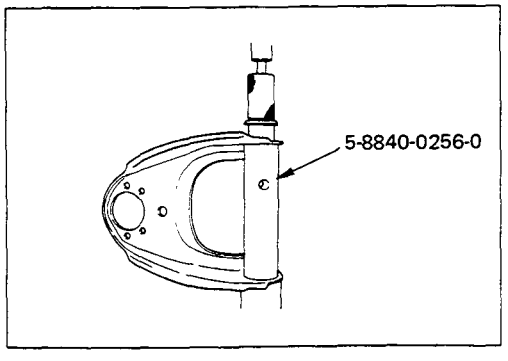

7. Pleate and Nut

Tighten fulcrum pin nut finger-tight.

Perform the secure tightening after adjusting buffer clearance.

10. Bolt

Fulcrum Pin Bolt Torque	kg·m(lb.ft/N·m)
15.5 ±1.5 (112.1 ±10.8/152.0 ±14.7)	

11. Upper End

Upper End Torque	kg·m(lb.ft/N·m)
3.3 ±0.3 (23.9 ±2.2/32.4 ±2.9)	

13. 14. 16. Nut

Knuckle Nut Torque	kg·m(lb.ft/N·m)
Lower End	15.0 ±1.0 (108.5 ±7.2/147.1 ±9.8)
Upper End	10.0 ±1.0 (79.7 ±7.2/107.9 ±9.8)
Steering Link End	10.0 ±1.0 (79.7 ±7.2/107.9 ±9.8)

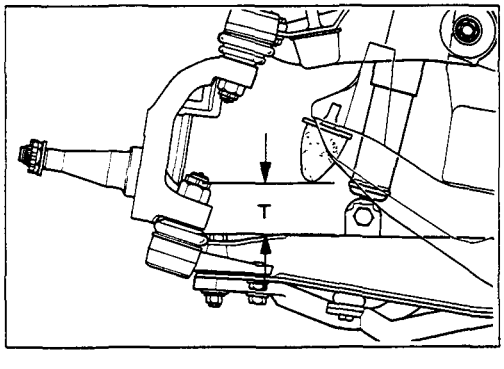

Fasten the bushing nut, and keep the buffer clearance as shown on the left diagram.

T = 53 mm (2.09 in)

Lower Link Nut

Lower Link Nut Torque	kg·m(lb.ft/N·m)
12.9 ±1.3 (93.3 ±9.4/126.5 ±12.8)	

Upper Link Nut

Upper Link Nut Torque	kg·m(lb.ft/N·m)
11.0 ±1.5 (79.6 ±10.8/107.9 ±14.7)	

KNUCKLE, UPPER LINK AND LOWER LINK

DISASSEMBLY

4 x 4 model

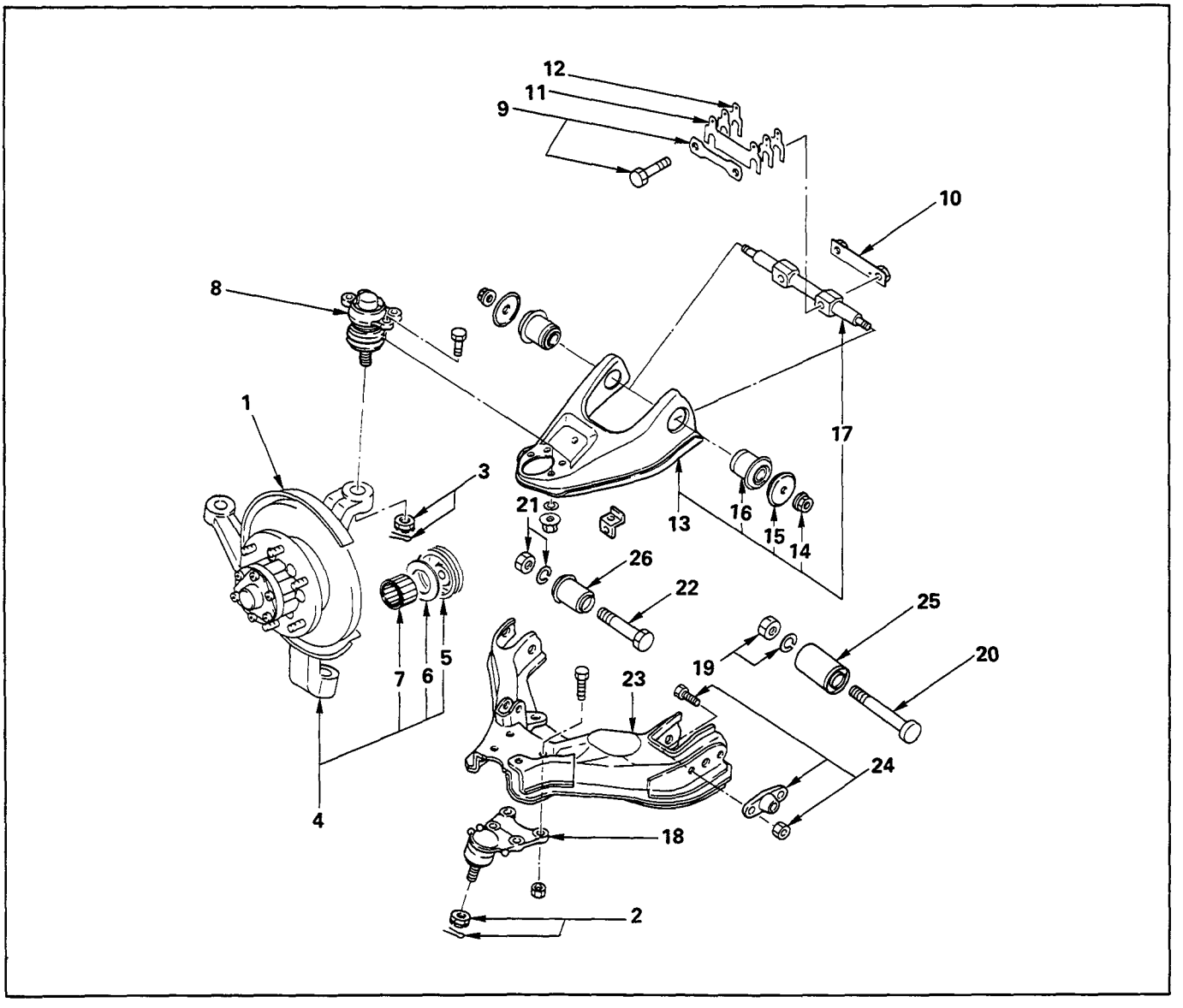

Disassembly Steps

Knuckle

1. Back plate and hub
2. Nut and cotter pin
3. Nut and cotter pin
4. Knuckle
5. Oil Seal
6. Washer
▲ 7. Needle bearing

Upper Link

8. Upper end
9. Bolt and plate
10. Nut assembly
▲ 11. Camber shims
▲ 12. Caster shims
13. Upper link assembly
14. Nut
15. Plate
▲ 16. Bushing
17. Fulcrum pin

Lower Link

18. Lower end
19. Nut and washer
20. Bolt
21. Nut and washer
22. Bolt
▲ 23. Lower link assembly
24. Torsion bar arm
▲ 25. Bushing
▲ 26. Bushing

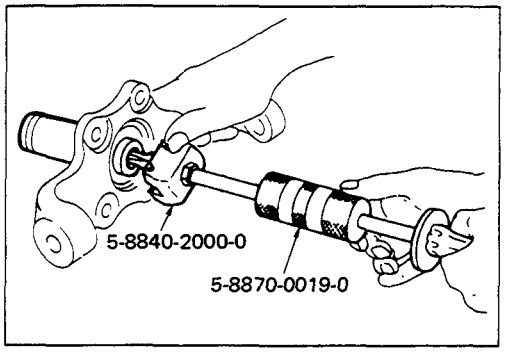

Important operations

7. Needle Bearing

Remover : 5-8840-2000-0
(J-5822)
Sliding hammer : 5-8840-0019-0
(J-23907)

11. Camber Shims

12. Caster Shims

Note the positions and number of shims.

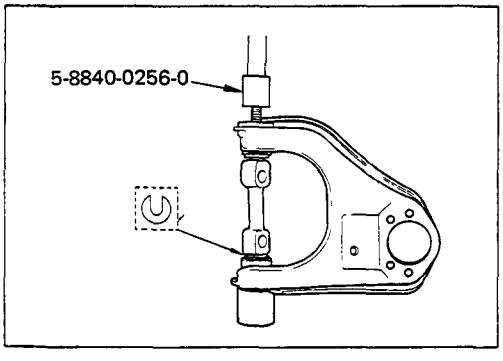

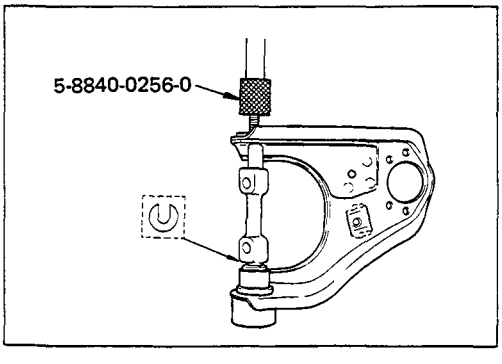

16. Bushing

Remover and installer : 5-8840-0256-0
(J-29755)

23. Lower Link Assembly

Before removal, remove the torsion bar, stabilizer bar and shock absorber.

Brake hoses should be removed before disassembly and installed after reassembly to avoid serious damage.

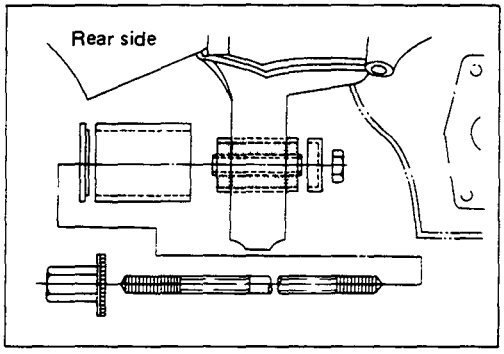

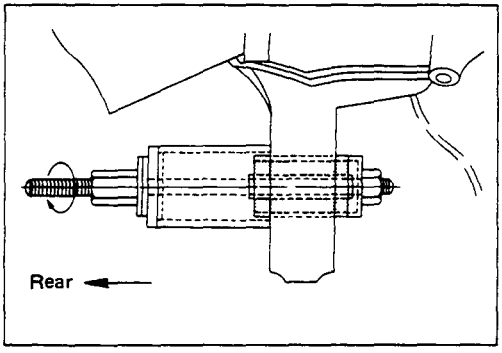

25. Bushing : Rear Side

Remover and Installer : 5-8840-2124-0
(J-36834)

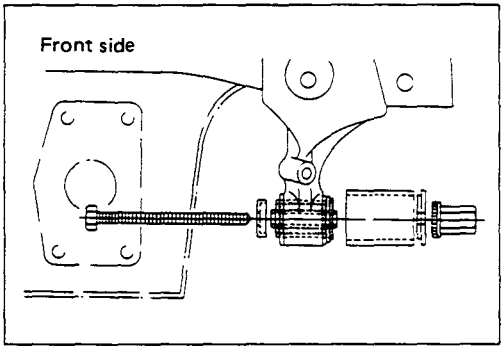

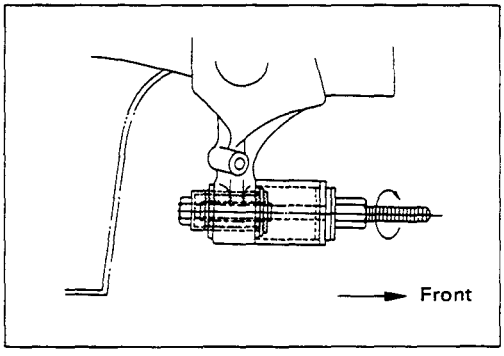

26. Bushing : Front Side

Remover and Installer : 5-8840-2123-0
(J-36833)

INSPECTION AND REPAIR

Make all necessary adjustments, repairs, and part replacements if wear, damage, or other problems are discovered during inspection.

- Knuckle, Knuckle arm
- Needle bearing, oil seal
- Upper link, lower link, bushing
- Upper end, lower end, boot
- Fulcrum pin
- Thrust washer

Visual Check

Inspect the following parts for wear, damage, or other abnormal conditions.

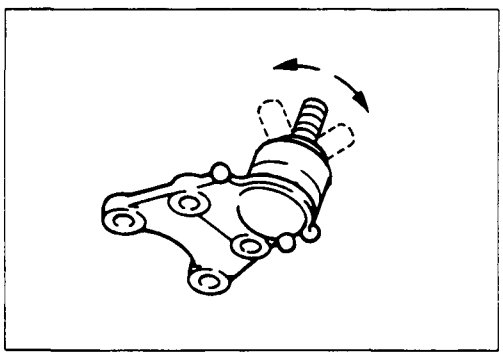

Upper Link End and Lower Link End

Inspect the upper and lower link end boot for damage or grease leak.

Move the ball joint as shown in the figure, then confirm its normal movement.

Inspect screw/taper area of ball joint for defects.

If any defects are found by the above inspections, replace the end assembly with new one.

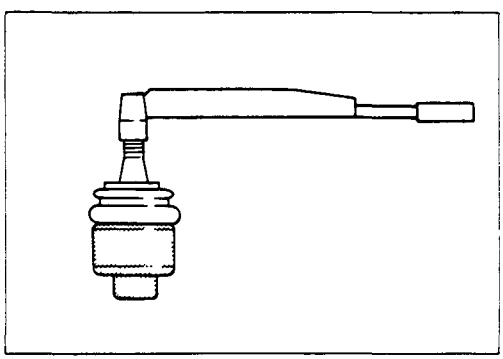

After moving the Ball Joint 4 or 5 times, attach nuts then measure the preload.

Preload	kg·m(lb.ft/N·m)
Upper link end	0.1—0.33 (0.7—2.4/0.9—3.2)
Lower link end	0.07—0.65 (0.15—1.43/0.06—0.64)

If the above limits specified are exceeded, replace the end assembly.

REASSEMBLY

4 x 4 Model

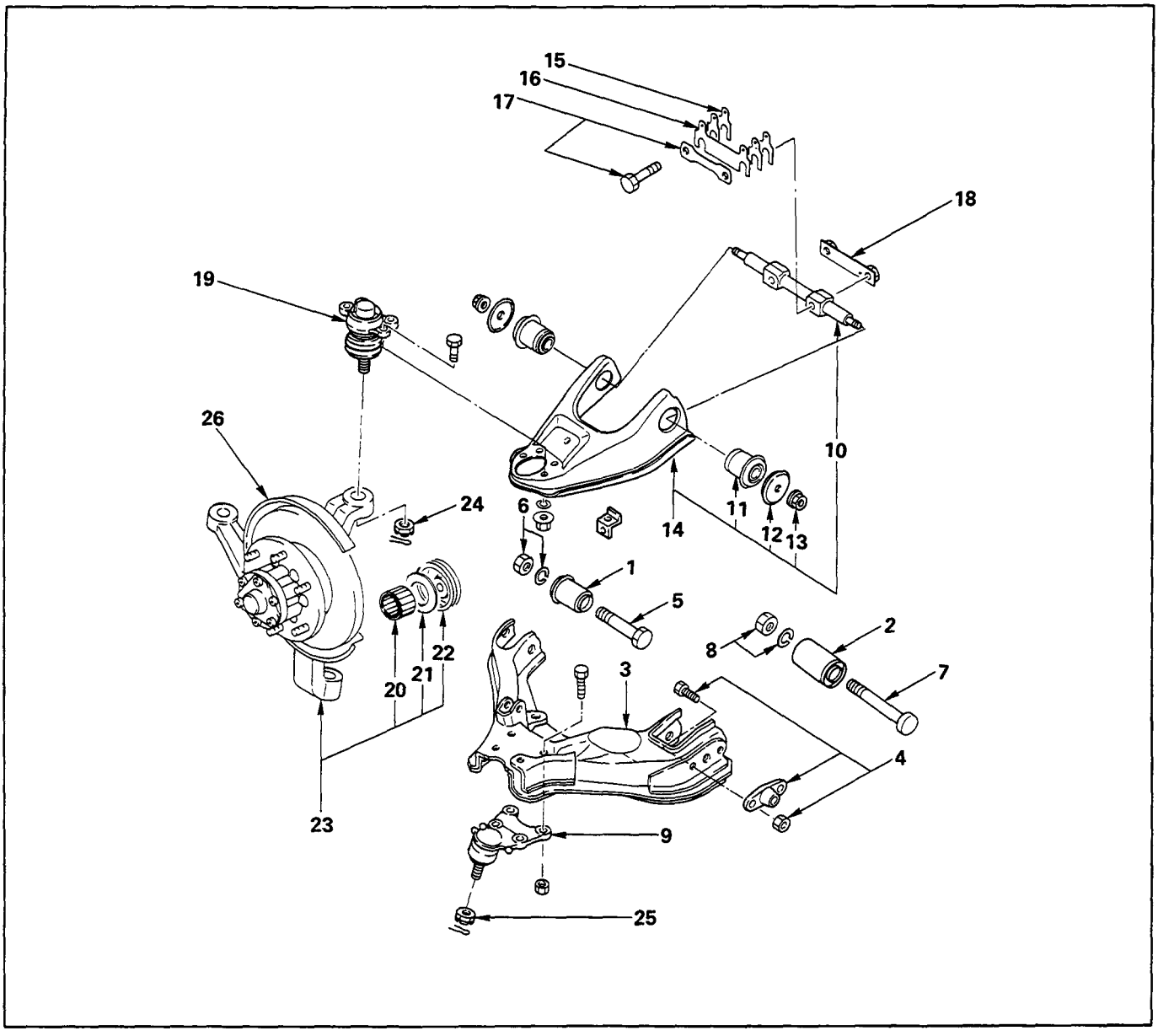

Reassembly Steps

Lower Link

- ▲ 1. Bushing ; front
- ▲ 2. Bushing ; Rear
- 3. Lower link assembly
- ▲ 4. Torsion bar arm
- 5. Bolt
- ▲ 6. Nut and washer
- 7. Bolt
- ▲ 8. Nut and washer
- ▲ 9. Lower End

Upper Link

- 10. Fulcrum pin
- ▲ 11. Bushing
- 12. Plate
- ▲ 13. Nut
- ▲ 14. Upper link assembly
- ▲ 15. Caster shims
- ▲ 16. Caster shims
- ▲ 17. Bolt and plate
- 18. Nut assembly
- ▲ 19. Upper end

Knuckle

- ▲ 20. Needle bearing
- 21. Washer
- ▲ 22. Oil seal
- 23. Knuckle
- ▲ 24. Nut and cotter pin
- ▲ 25. Nut and cotter pin
- 26. Back plate

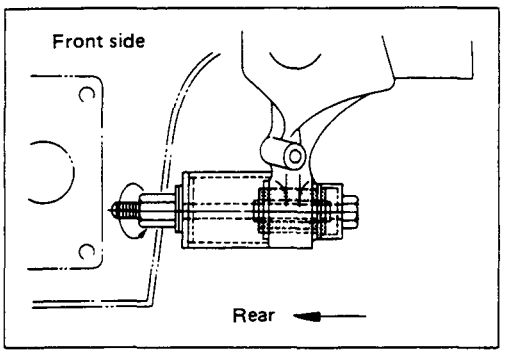

Important Operations

1. Bushing ; Front Side

Remover and Installer : 5-8840-2123-0
(J-36833)

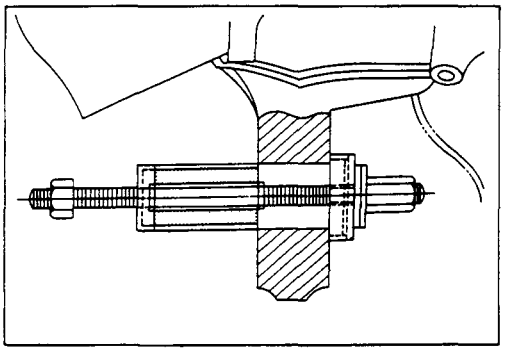

2. Bushing ; Rear Side

Remove and Installer : 5-8840-2124-0
(J-36834)

4. Torsion Bar Arm

Torsion Bar Arm Torque	kg·m(lb.ft/N·m)
11.8 ± 1.0 (85.3 ± 7.2/115.7 ± 9.8)	

6. 8. Nut and Washer

Tighten Lower Link Nut finger-tight.

Perform the secure Tightening after adjusting Buffer Clearance.

9. Lower End

Lower End Bolt Torque	kg·m(lb.ft/N·m)
10.5 ± 1.0 (75.9 ± 7.2/103.0 ± 9.8)	

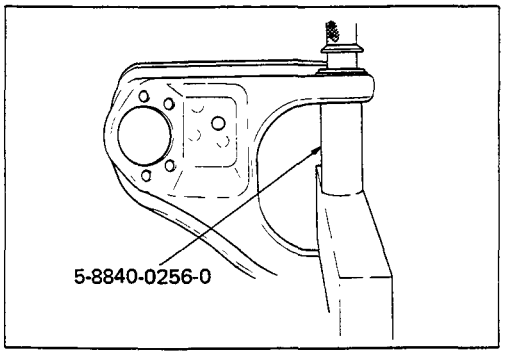

11. Bushing

Remover and Installer : 5-8840-0256-0
(J-29755)

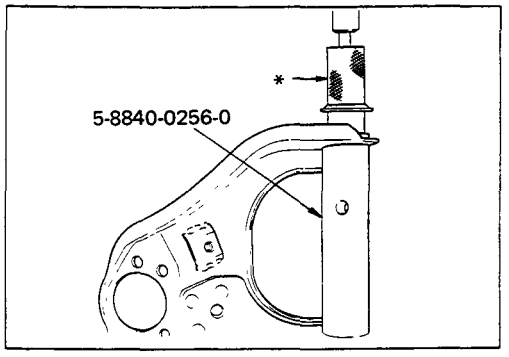

Apply a suitable socket to (*) portion.

13. Nut

Tighten fulcrum pin nut finger-tight.

Perform the secure tightening after adjusting buffer clearance.

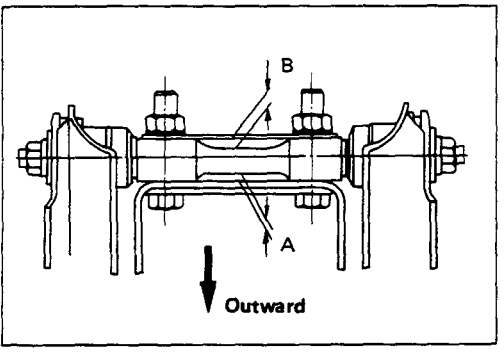

14. Upper Link Assembly

Install the smaller clearance A outside and larger clearance B inside of vehicle.

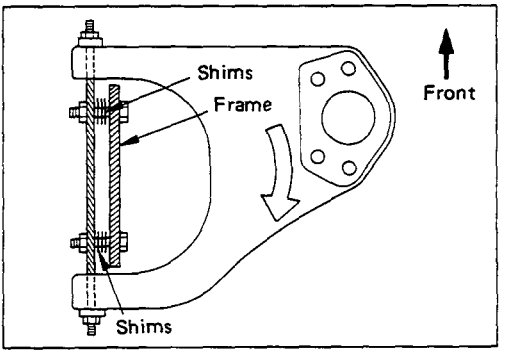

15. Caster Shims

Caster angle

Short Wheel Base	Long Wheel Base
1°55′ ± 45′	2°10′ ± 45′

Note:

No more than 35′ side to side variation.

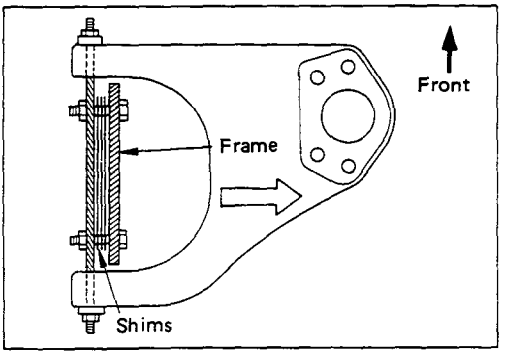

16. Camber Shims

Camber angle

30′ ± 60′

Note:

No more than 45′ side to side variation.

17. Bolt and Plate

Fulcrum Pin Bolt Torque	kg·m(lb.ft/N·m)
15.5 ± 1.5 (112.1 ± 10.8/152.0 ± 14.7)	

Apply oil to the thread.

19. Upper End

Upper End Bolt Torque	kg·m(lb.ft/N·m)
3.3 ± 0.3 (23.9 ± 2.2/32.4 ± 2.9)	

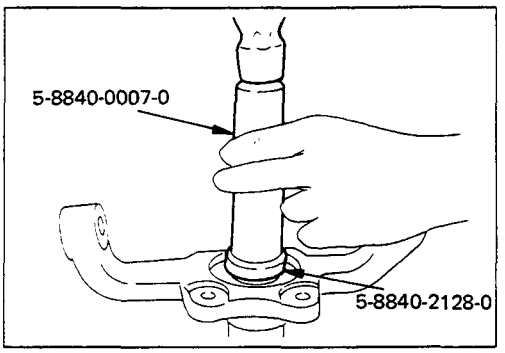

20. Needle Bearing

Installer : 5-8840-2128-0
(J-36838)

Grip : 5-8840-0007-0
(J-8092)

Before installation, apply the appropriate amount of specified grease (Besco L2 or equivalent) to the bearing (Approx. 15g).

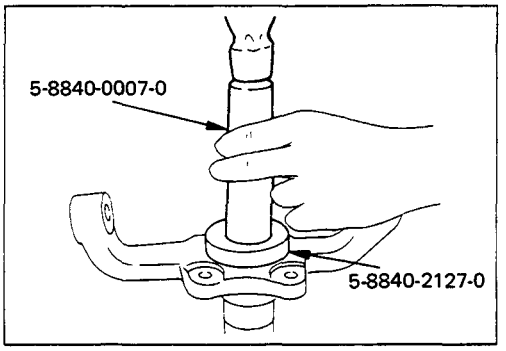

22. Oil Seal

Installer : 5-8840-2127-0
(J-36837)

Grip : 5-8840-0007-0
(J-8092)

- Insert the thrust washer into the knuckle.
- After fitting the oil seal to the setting tool; installer, drive it to the knuckle using a hammer or bench press until the tool front face contacts with the thrust washer.
- Apply the specified grease to the thrust washer, and install after turning the place where there is a chamfer to the spindle.
- Use a new oil seal, and apply the specified grease (Besco L2 or equivalent) to the place surrounded by the lip (Approx. 15g).

24. 25. Nut and Cotter Pin

Torque	kg·m(lb.ft/N·m)
Upper Link End	10.0±1.0 (72.3±7.2/98.1±9.8)
Lower Link End	13.0±1.0 (94.0±7.2/127.5±9.8)
Track Rod End	11.0±1.0 (79.6±7.2/107.9±9.8)

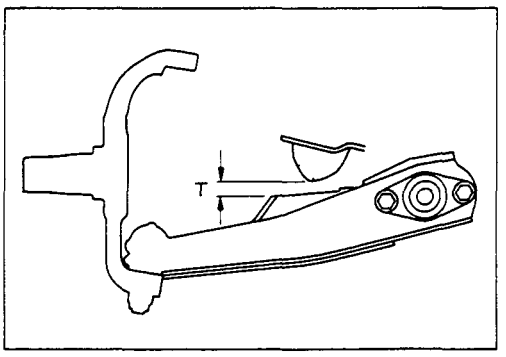

Fasten the bushing nut and keep the buffer clearance as shown on the left diagram.

T = 15 mm (0.59 in)

Nut and Washer

Front Lower Link Nut Torque	kg·m(lb.ft/N·m)
16.0 ± 2.0 (115.7 ± 14.5/156.9 ± 19.6)	

Apply oil to the thread.

Nut and Washer

Rear Lower Link Nut Torque	kg·m(lb.ft/N·m)
20.0 ± 2.0 (144.7 ± 14.5/196.1 ± 19.6)	

Apply oil to the thread.

Nut

Fulcrum Pin Nut Torque	kg·m(lb.ft/N·m)
11.0 ± 1.5 (112.1 ± 10.8/152.0 ± 14.7)	

TROUBLESHOOTING

1. VIBRATION, SHOCK, AND SHIMMY OF STEERING WHEEL

Checkpoint		Trouble Cause	Countermeasure
Check vehicle trim height	NG	Incorrect	Adjust
OK			
Check shock absorber or attaching nut and bolt	NG	Malfunction or loose	Replace or retighten
OK			
Check upper and lower link bushings	NG	Worn	Replace
OK			
Check suspension ball joint	NG	Worn	Replace
OK			
Check wheel alignment	NG	Faulty	Adjust
OK			
Check front axle	NG	Check steering unit and linkage	Check tires and wheels

- Improperly adjusted or worn front wheel bearing.
- Worn or incorrectly adjusted wheel bearing.

Replace; refer to Section 4C "Front Wheel Drive

- Insufficiently tightened steering gear housing.
- Wear of steering linkage.
- Excessive backlash due to improper adjustment of the steering gear box.
- Worn column bearing. weakened column bearing spring, or loose clamp.

Replace; refer to Section 3B "Steering"

- Improper tire pressure.
- Imbalance and deformation of froad wheel.
- Unevenly worn tire or insufficient tightening of wheel nuts.

Replace; refer to Section 3E "Wheel and Tires"

2. VEHICLE PULLS TO RIGHT OR LEFT

Checkpoint		Trouble Cause	Countermeasure
Torsion bar	NG	Collapsed or twisted	Replace
OK			
Vehicle trim height	NG	Incorrect	Adjust
OK			
Brake adjustment (binding)	NG	Incorrect	Adjust
OK			
Wheel alignment	NG	Incorrect	Adjust
OK			
Rubber bushing for upper and lower link, and strut bar	NG	Worn	Replace
OK			
Steering linkage, and upper and lower link and strut bar	NG	Deformed	Replace
OK			
Front wheel bearing	NG	Incorrect adjustment or abrasion	Adjust or replace

Continued on the next page

Continued from the previous page

Checkpoint		Trouble Cause		Countermeasure
Tire pressure or wheel nuts	NG	Improper or instufficient tightening	—	Adjust or tighten
Tire tread (right and left)	NG	Difference in wear and tear	—	Replace (tire)

OK

OK

3. INSTABILITY OF VEHICLE

Checkpoint		Trouble Cause	Countermeasure
Vehicle trim height	NG	Incorrect	Adjust
OK			
Rubber bushings for upper and lower links. and strut bar (4x2)	NG	Worn	Replace
OK			
Steering linkage and upper and lower links	NG	Worn or deformed	Replace
OK			
Wheel alignment	NG	Incorrect	Adjust
OK			
Steering gear (back lash and worm bearing preload)	NG	Incorrect	Adjust
OK			
Tire pressure	NG	Improper	Adjust
OK			
Road wheel	NG	Deformed or unbalanced	Adjust

4. STIFF STEERING WHEEL

Checkpoint		Trouble Cause	Countermeasure
Upper and ball joint	NG	Stiff or damaged or lack of grease	Replace
OK			
Wheel alignment	NG	Incorrect	Adjust
OK			
Steering gear (Back lash)	NG	Incorrect	Adjust
OK			
Steering gear	NG	Worn or damaged	Replace
OK			
Steering linkage	NG	Deformed	Replace
OK			
Steering gear box or steering linkage	NG	Insufficient lubricants or impurities present; or excessively worn	Replace the part
OK			
Steering column with turn signal switch	NG	Interference abrasion	Replace
OK			
Tire pressure	NG	Improper	Adjust

5. NOISES

Checkpoint		Trouble Cause	Countermeasure
Strut bar (4x2)	NG	Broken	Replace
OK			
Upper and lower links and strut bar bushings	NG	Worn	Replace
OK			
Shock absorber fixing nut and bolt	NG	Loose	Retighten
OK			
Stabilizer fixing nuts and bolts	NG	Loose	Retighten
OK			
Shock absorber	NG	Faulty	Replace
OK			
Lubricating oil and grease for upper and lower ball joint	NG	Insufficient	Replace
OK			
Upper and lower ball joint	NG	Damaged	Replace

Continued on the next page

Continued from the previous page

Checkpoint		Trouble Cause		Countermeasure
Tire pressure	NG	Improper	—	Adjust
Steering linkage and steering gear	NG	Worn	—	Replace
Front wheel bearing	NG	Incorrect adjustment or abrasion	—	Adjust or replace
Steering unit fixing bolts and linkage	NG	Loose	—	Retighten
Lubricating oil and grease to steering linkage	NG	Insufficient	—	Replace

OK

6. EXCESSIVE STEERING WHEEL PLAY

Checkpoint		Trouble Cause	Countermeasure
Upper, and lower links, and strut bar bushing (4x2)	NG	Worn	Replace
OK			
Steering linkage	NG	Worn	Replace
OK			
Adjusted gear housing	NG	Incorrectly	Adjust
OK			
Front wheel bearing	NG	Incorrect adjustment or abrasion	Adjust or replace

7. GRATING TIRE NOISE

Checkpoint		Trouble Cause	Countermeasure
Wheel alignment	NG	Incorrect	Adjust
OK			
Knuckle spindle and and steering linkage	NG	Deformed	Replace
OK			
Suspension fixing bolt	NG	Loose	Replace
OK			
Tire pressure	NG	Improper	Adjust

8. EXCESSIVELY OR PARTIALLY WORN TIRE

Checkpoint		Trouble Cause	Countermeasure
Tire pressure	NG	Improper	Adjust
OK			
Wheel alignment	NG	Incorrect	Adjust
OK			
Front wheel bearing	NG	Faulty	Replace
OK			
Brake adjustment	NG	Incorrect	Adjust
OK			
Tire rotation	NG	Not rotated	Rotate tires at recomended intervals

DELTA OPEL ISUZU SUZUKI

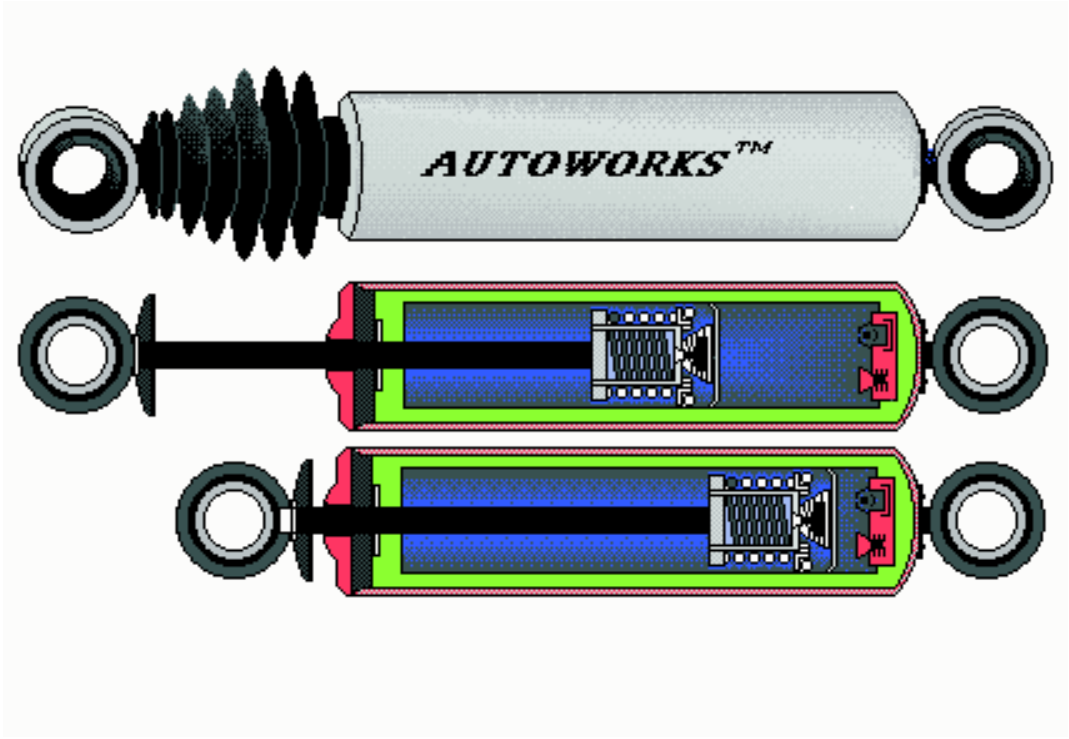

Hi - Tech

Index

Specs.

Description

Repair

KB TF 140
Rear Suspension

ISUZU

SECTION 3D
REAR SUSPENSION

TABLE OF CONTENTS

PAGE

Main Data and Specifications ..... 3D— 2
Torque Specifications ..... 3D— 3
Special Parts Fixing Nut and Bolt ..... 3D— 3
Rear Suspension ..... 3D— 4
General Description ..... 3D— 4
Disassembly ..... 3D— 5
Inspection and Repair ..... 3D— 7
Reassembly ..... 3D— 9
Troubleshooting ..... 3D—12

MAIN DATA AND SPECIFICATIONS

Items \ Models		4 x 2	4 x 2 (15" Wheels)	4 x 4
Type		Semi-eliptic, rubber bushed, leaf type springs and direct double acting shock absorbers.		
Main spring				
No. of leaves		4		5
Leaf thickness - Numbered	mm(in)	7 (0.276) ; No. 1-2		6.5 (0.256) ; No. 1
(Top to bottom)		6 (0.236) ; No. 3		6 (0.236) ; No. 2-4
		15 (0.591) ; No. 4		15 (0.591) ; No. 5
Spring eye type		Berlin eye type		
Bushing outside dia.	mm(in)	Front; 40 (1.575)		
Lenght	mm(in)	1200 (47.244)		
Width	mm(in)	60 (2.362)		
Rate - Unclamped	kg/mm	2.61/7.96		2.85/7.90
	(lb/in)	(146.0/445.4)		(159.4/441.9)
Clamped	kg/mm			
	(lb/in)			
Rear spring capacity	kg	768		763
	(lb/N)	(1693/7532)		(1682/7483)
Weight	kg(lb/N)	15.6 (34.4/153)		18.4 (40.6/180)
Shock absorbers				
Type: Hydraulic, double acting, telescopic		Base and LE 4 x 2 models		
Gas pressurised, double acting telescopic		LX and 4 x 4 models		
Mean stroke	mm(in)	FRONT 115 (4.53)	REAR 140 (5,51)	
Compressed lenght	mm(in)	210 (8.27)	235 (9,25)	
Extended lenght	mm(in)	325 (12.80)	375 (14.76)	
Damping rate	kg(N)			
Compression		14,5 (145) at 0,3 m/sec		
Rebond		134,5 (1345) at 0,3 m/sec		
Bump rubber				
Height	mm(in)	69 (2.72)		84 (3.31)

TORQUE SPECIFICATIONS

SPECIAL PARTS FIXING NUTS AND BOLTS

Rear Suspension kg·m(lb.ft/N·m)

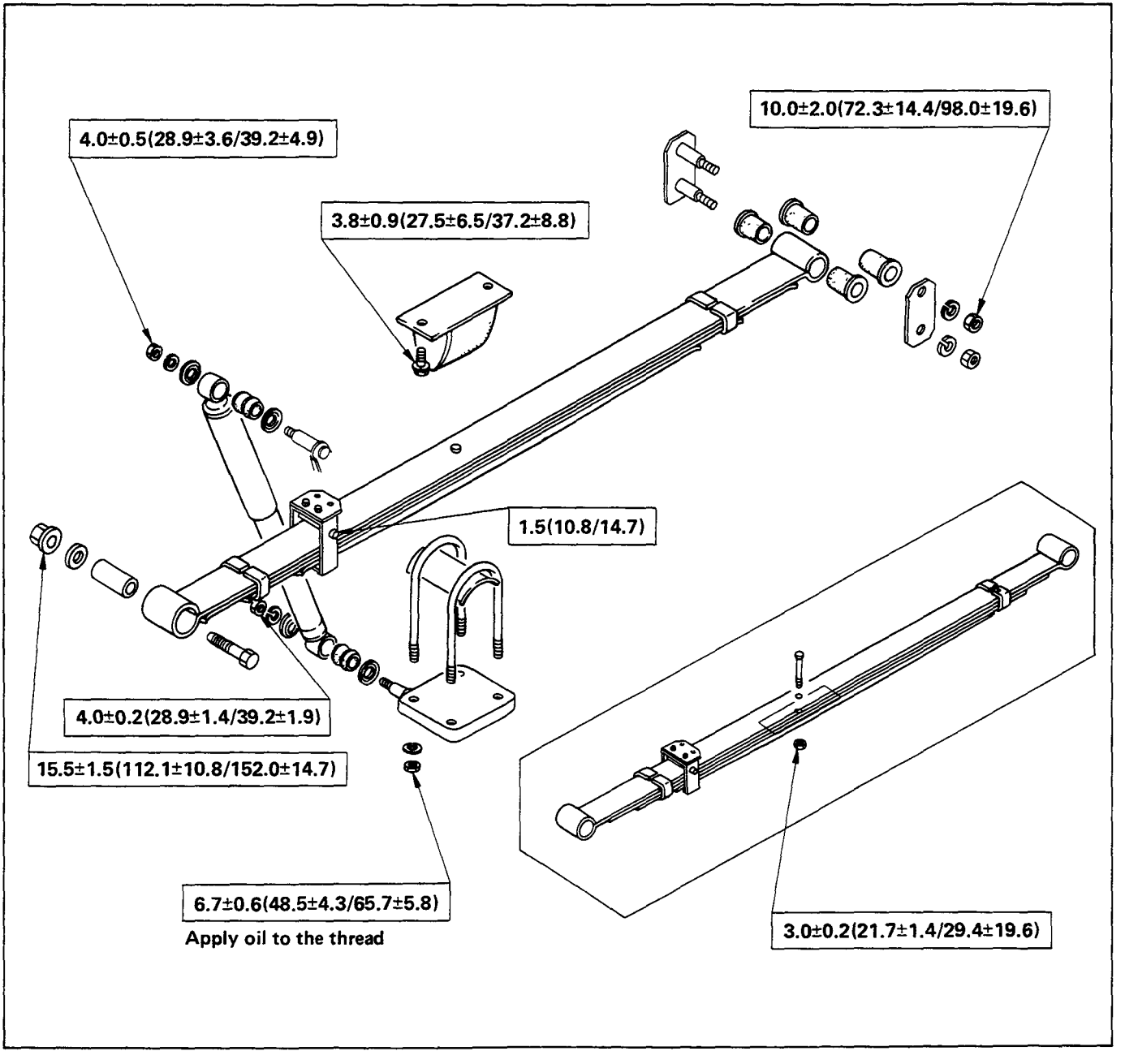

REAR SUSPENSION

GENERAL DESCRIPTION

4 x 2 Model

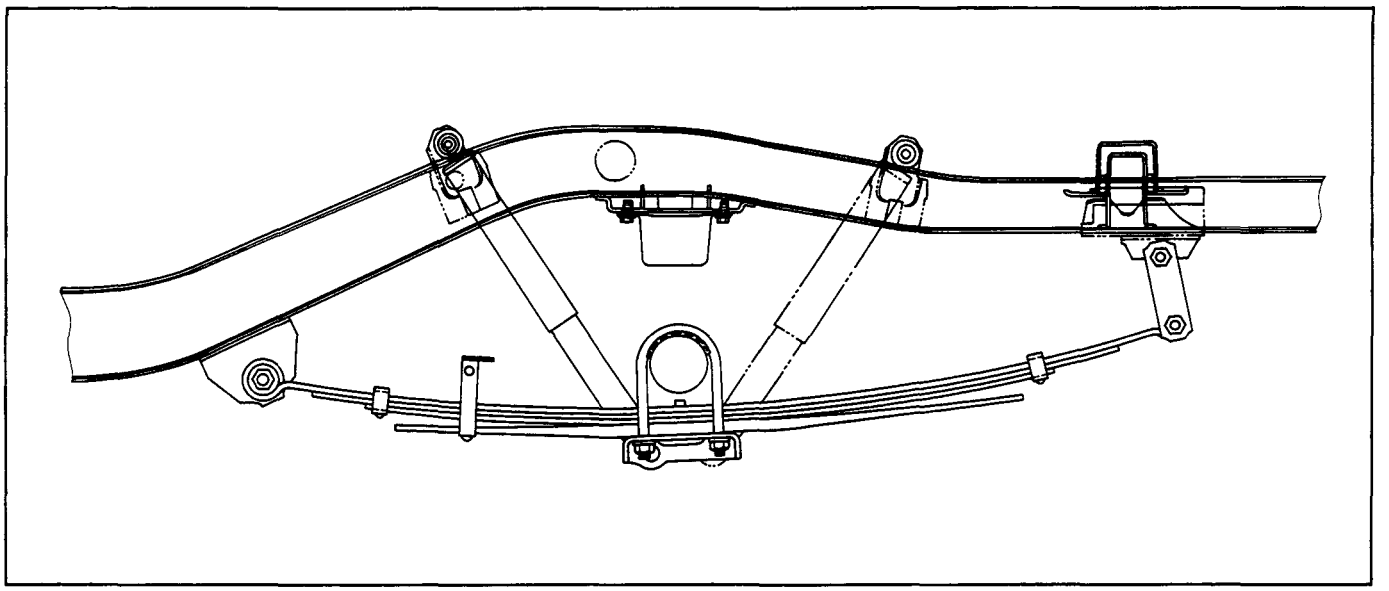

4 x 4 Model

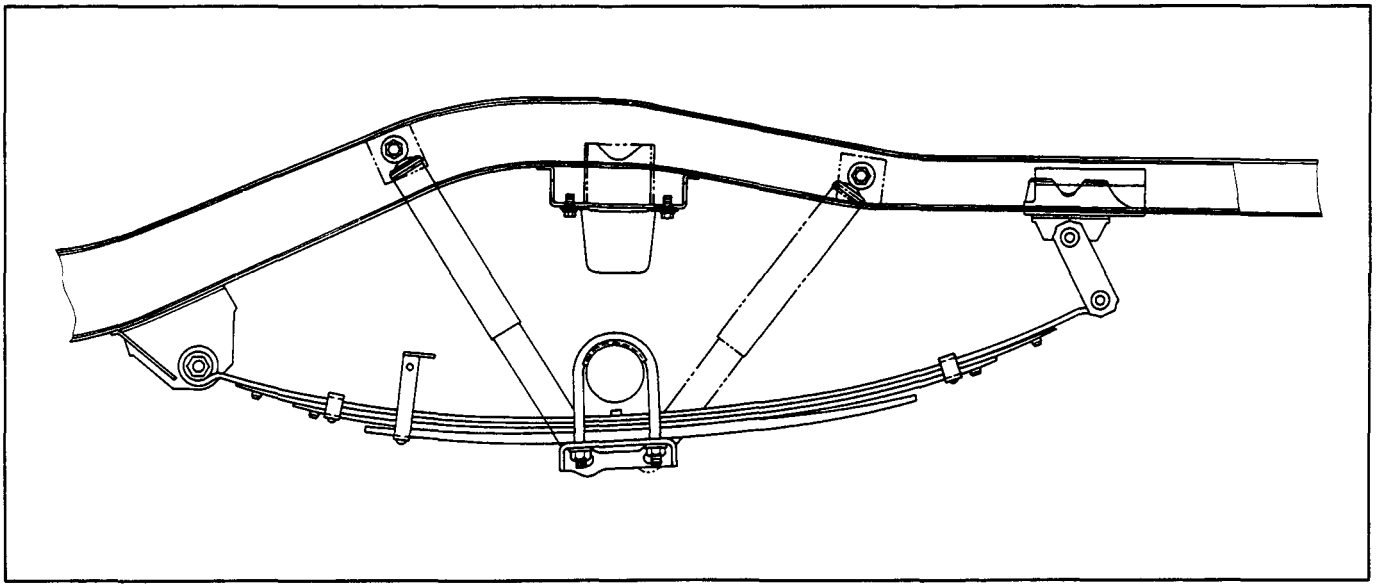

Rear suspension absorbs vibration from the road surface thus preventing vehicle damage, as well as providing a good ride.

Components parts

- **Spring between the body and the axle case**
- **Spring shackle connecting the spring to the body**
- **Clamp and U-bolt fixing the axle case to the spring**
- **Shock absorber as a countermeasure for vibration**

DISASSEMBLY

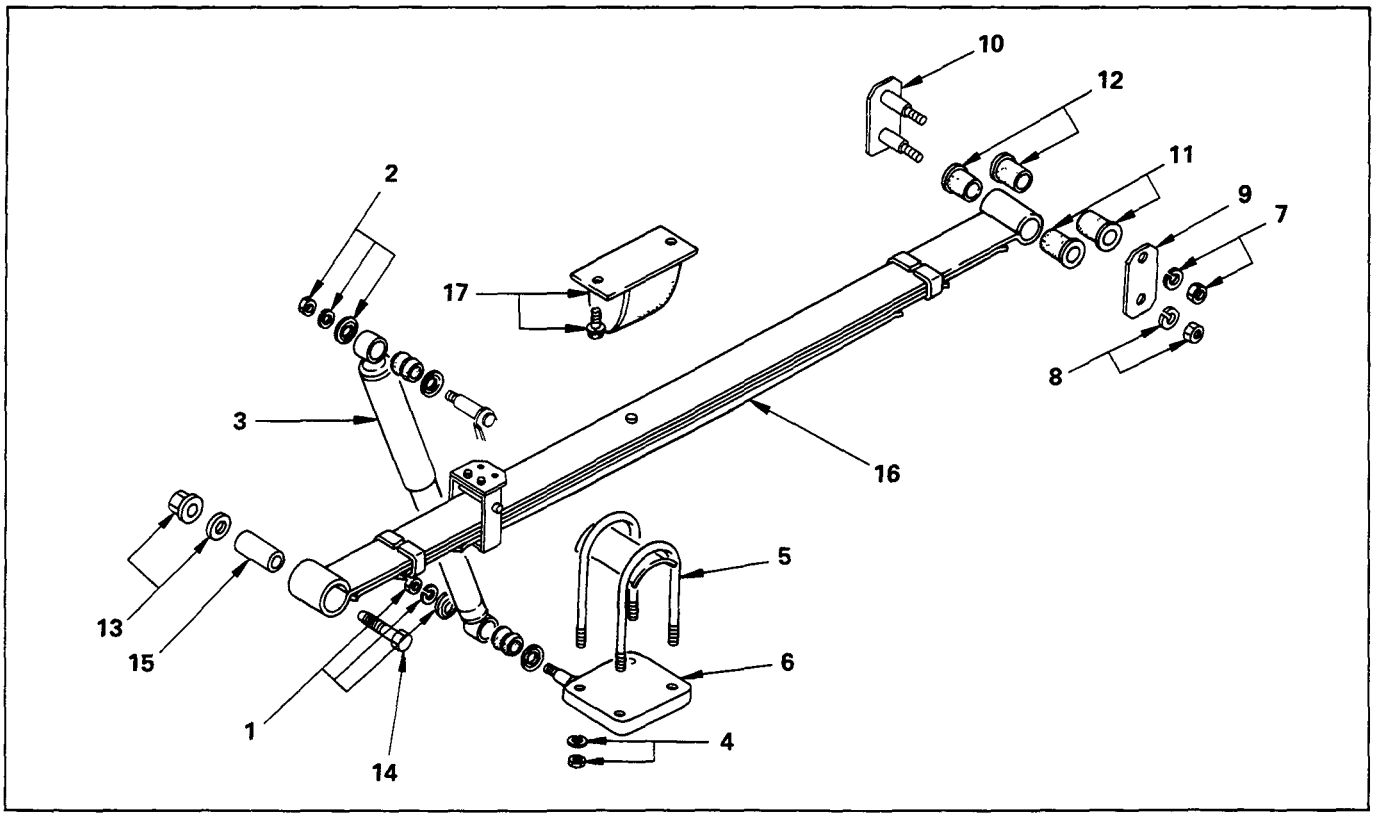

Disassembly Steps

- ▲ 1. Nut and washer
- ▲ 2. Nut and washer
- 3. Shock absorber
- ▲ 4. Nut and washer
- ▲ 5. U-bolt
- 6. Lower clamp
- ▲ 7. Nut and washer
- ▲ 8. Nut and washer
- ▲ 9. Shackle plate
- ▲ 10. Shackle
- 11. Rubber bushing
- 12. Rubber bushing
- ▲ 13. Nut and washer
- ▲ 14. Bolt, washer and spring pin
- ▲ 15. Bushing
- 16. Leaf spring assembly
- 17. Bolt and bump rubber

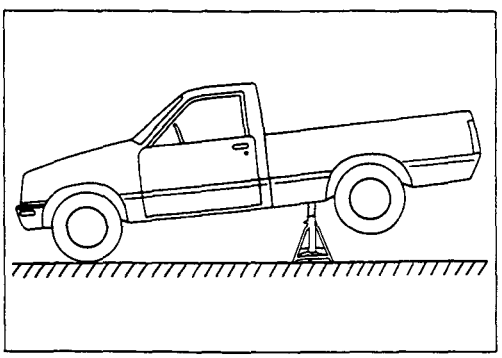

Important Operations

Jack up the rear axle and place chassis stands under the frame near the front end of the rear spring brackets.

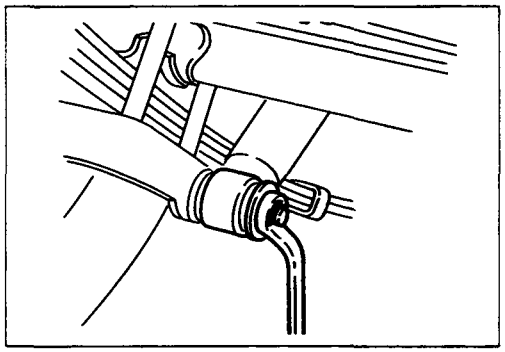

1. 2. Nut and Washer

Caution (Australia only):

The shock absorbers have been charged with gas at the factory. Exposure to high temperatures or an open flame can result in a dangerous explosion.

Keep the shock absorbers away from high temperatures and open flames.

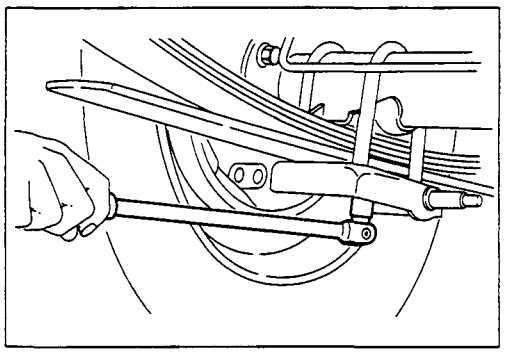

4. Nut and Washer

5. U-bolt

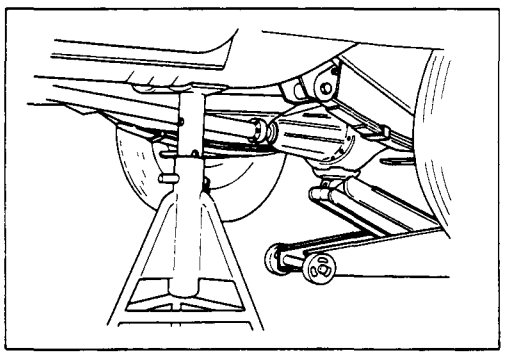

Jack up the rear axle case slightly to separate it from the leaf spring assemblies.

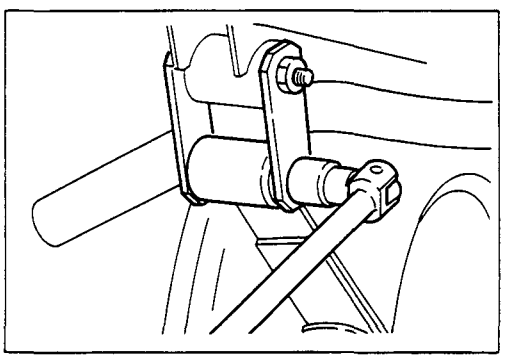

7. 8. Nut and Washer

9. 10. Shackle

Remove the nut and drive out the shackle with a hammer using a brass bar.

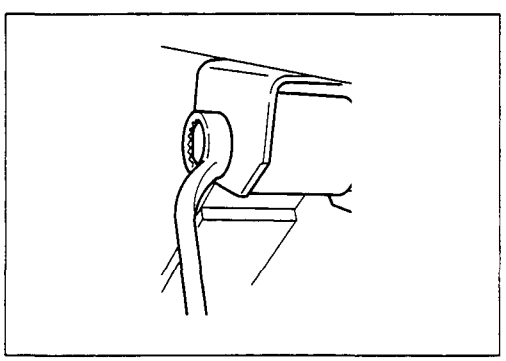

13. 14. Nut, Washer, Bolt and Spring Pin

Remove the nut and drive out the spring pin with a hammer using a brass drift.

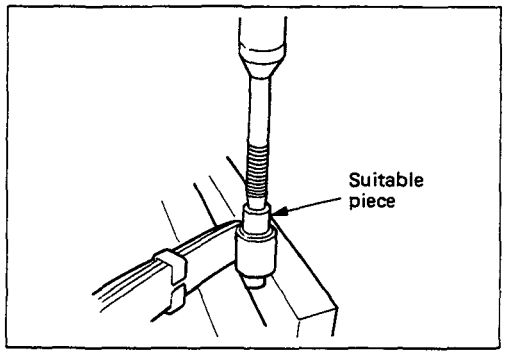

15. Bushing

Remove the bushing using a bench press.

INSPECTION AND REPAIR

Make correction or parts replacement if wear, damage or their abnormal conditions are found through inspection.

- Leaf spring assembly
- Clip
- Center bolt
- U-bolt
- Spring pin
- Shackle pin
- Shock absorber
- Bump rubber
- Rubber bushing
- Bump rubber seat

Visual Check

Inspect the following parts for wear, damage or their abnormal conditions.

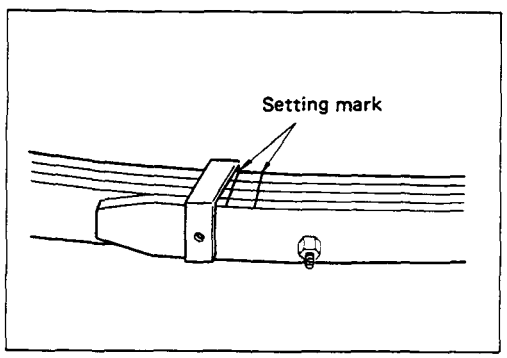

Leaf Spring Assembly Replacement

- Apply a setting mark across the springs before disassembling the leaf spring assembly.
- Apply grease to both faces of each leaf spring at assembly.
- Use a bench press for disassembly and reassembly.
- Discard center bolt and install a new one.

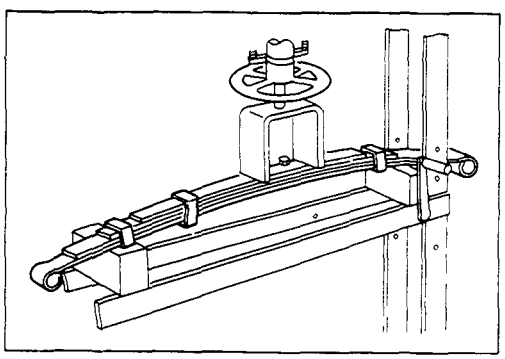

Center Bolt

Center Bolt Torque	kg·m(lb.ft/N·m)
3.0 ± 0.2 (21.7 ± 1.4/29.4 ± 19.6)	

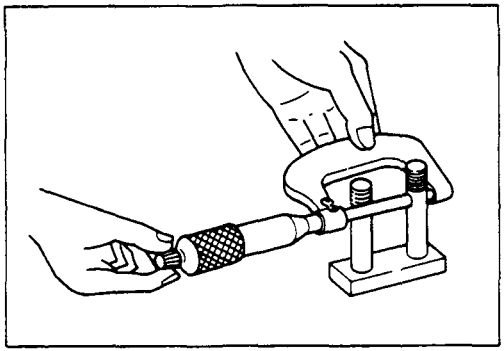

Shackle Pin

Shackle Pin Diameter	mm(in.)
17.93 – 18.00 (0.706 – 0.709)	

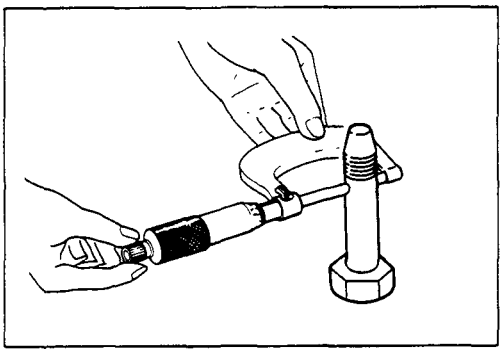

Spring Pin

Spring Pin Diameter	mm(in.)
13.8 – 14.0 (0.543 – 0.551)	

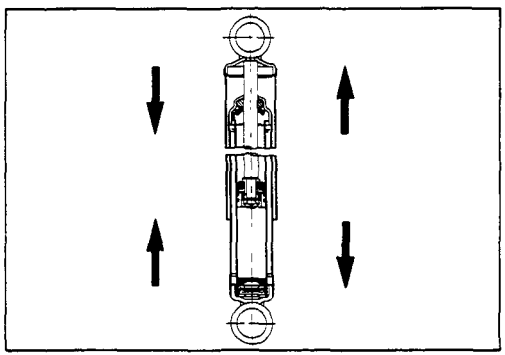

Shock Absorber

Inspection operation of shock absorber

If no resistance is felt while expanding the shock absorber, that indicates the absorber is faulty.

REASSEMBLY

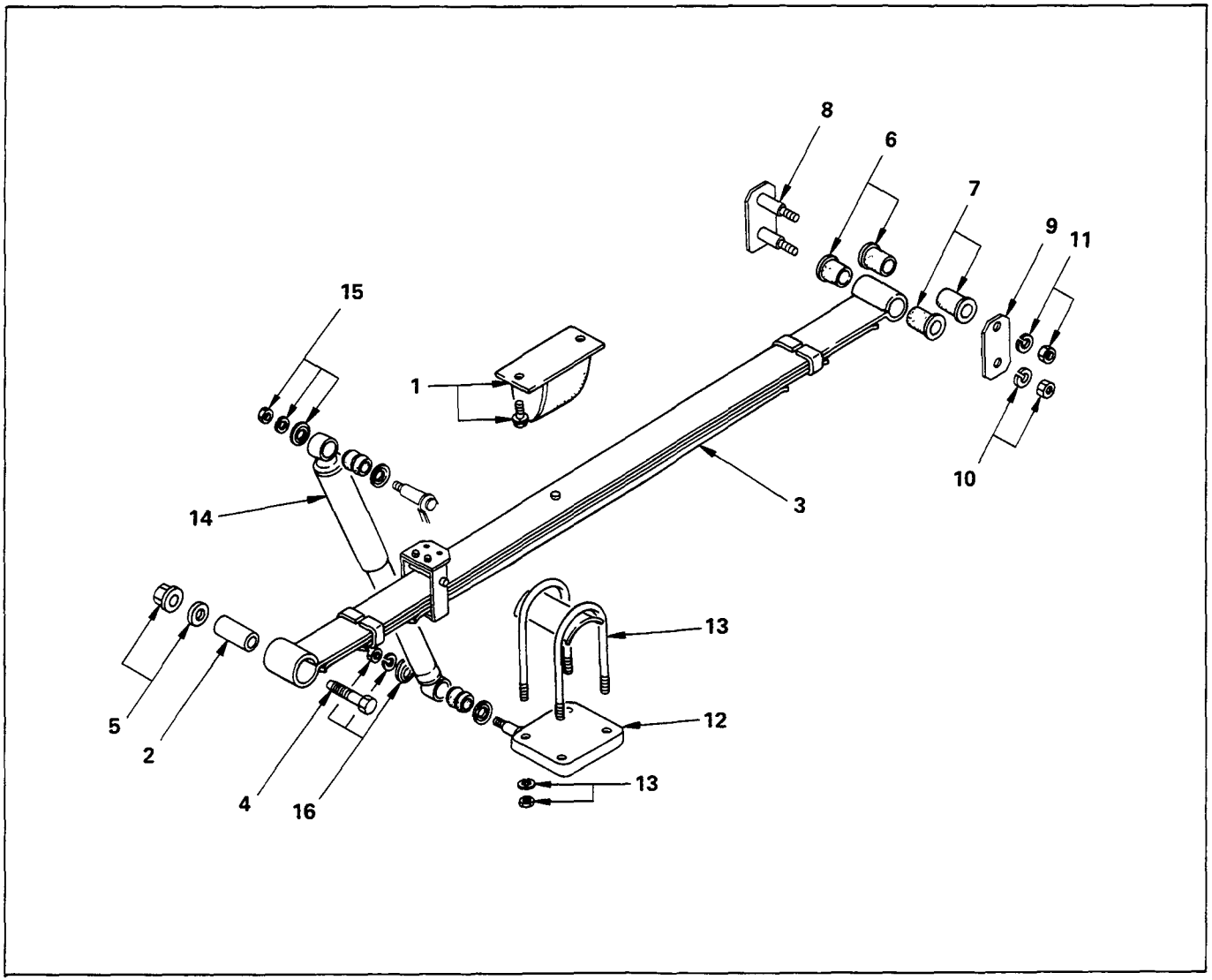

Reassembly Steps

1. Bump rubber
▲ 2. Bushing
▲ 3. Leaf spring assembly
4. Spring pin, bolt and washer
▲ 5. Nut and washer
▲ 6. Rubber bushing
▲ 7. Rubber bushing
▲ 8. Shackle
▲ 9. Shackle plate
▲ 10. Nut and washer
▲ 11. Nut and washer
12. Lower clamp
▲ 13. U-bolt and nut
▲ 14. Shock absorber
▲ 15. Nut and washer
▲ 16. Nut and washer

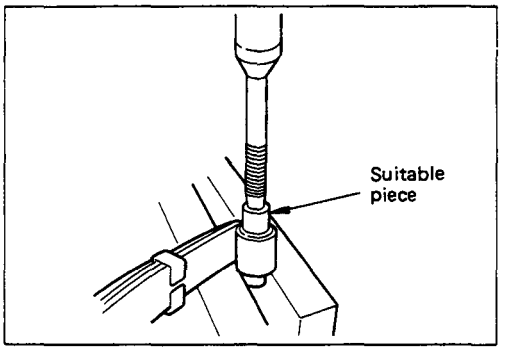

Important Operations

2. Bushing

Install the bushing using a bench press.

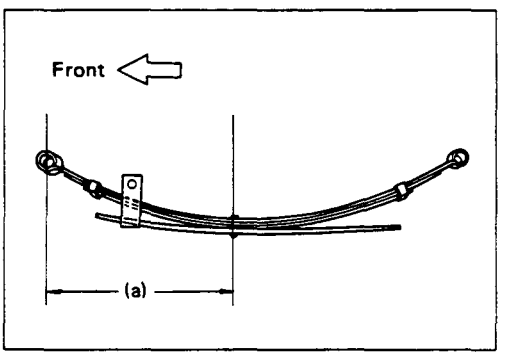

3. Leaf Spring Assembly

The leaf spring assembly should be installed so that the shorter length (a) (distance between center bolt and center of spring eye) is toward the front.

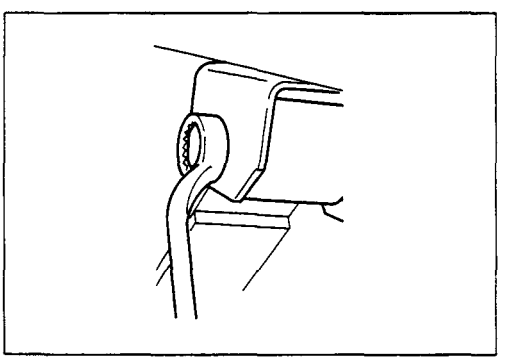

5. Nut and Washer

Spring Pin Torque	kg·m(lb.ft/N·m)
15.5 ± 1.5 (112.1 ± 10.8/152.0 ± 14.7)	

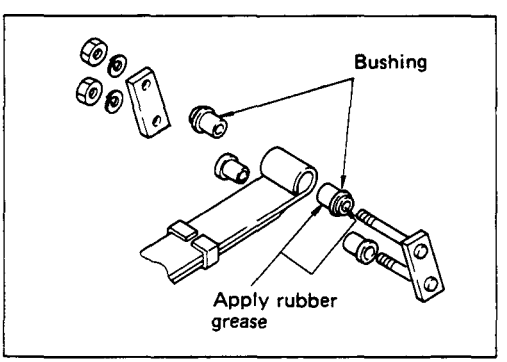

6. 7. Rubber Bushing

Apply rubber grease to inside and outside of the rubber bushing.

8. 9. Shackle

10. 11. Nut and Washer

Install bushing with collar on the leaf spring, then install and tighten the nut.

Note:

Tighten the nuts to the specified torque with the vehicle empty.

Shackle Nut Torque	kg·m(lb.ft/N·m)
10.0 ± 2.0 (72.3 ± 14.4/98.0 ± 19.6)	

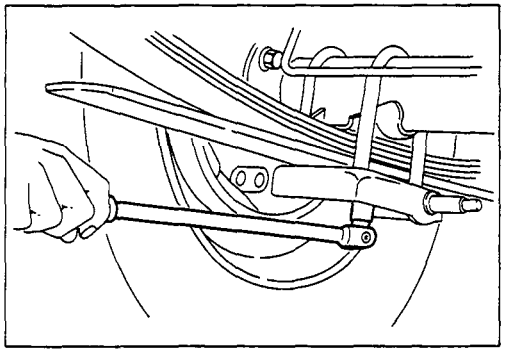

13. U-bolt and Nut

When tightening the nuts apply oil as necessary to prevent damaging the threads.

U-bolt Nut Torque	kg·m(lb.ft/N·m)
6.7 ± 0.6 (48.5 ± 4.3/65.7 ± 5.8)	

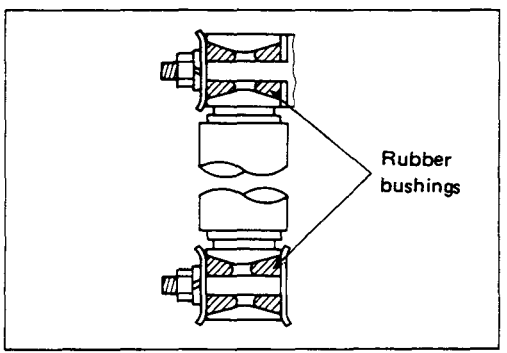

14. Shock Absorber

15. 16. Nut and Washer

Refer to the drawing for parts installation.

Shock Absorber Nut Torque	kg·m(lb.ft/N·m)
4.0 ± 0.5 (28.9 ± 3.6/39.2 ± 4.9)	

TROUBLESHOOTING

1. BODY INCLINATION

Checkpoint		Trouble Cause	Countermeasure
Springs	NG	Weak or broken	Replace
Shackle pins and bushings	NG	Worn or disintegrated	Replace
	NG	Poorly lubricated	Regrease
Spring brackets and U-bolts	NG	Bolts loosened	Retighten
	NG	Cracked	Replace
Shock absorbers	NG	Bushings worn or disintegrated	Replace
Mounting brackets	NG	Defective	Replace

2. REDUCTION IN GROUND CLEARANCE

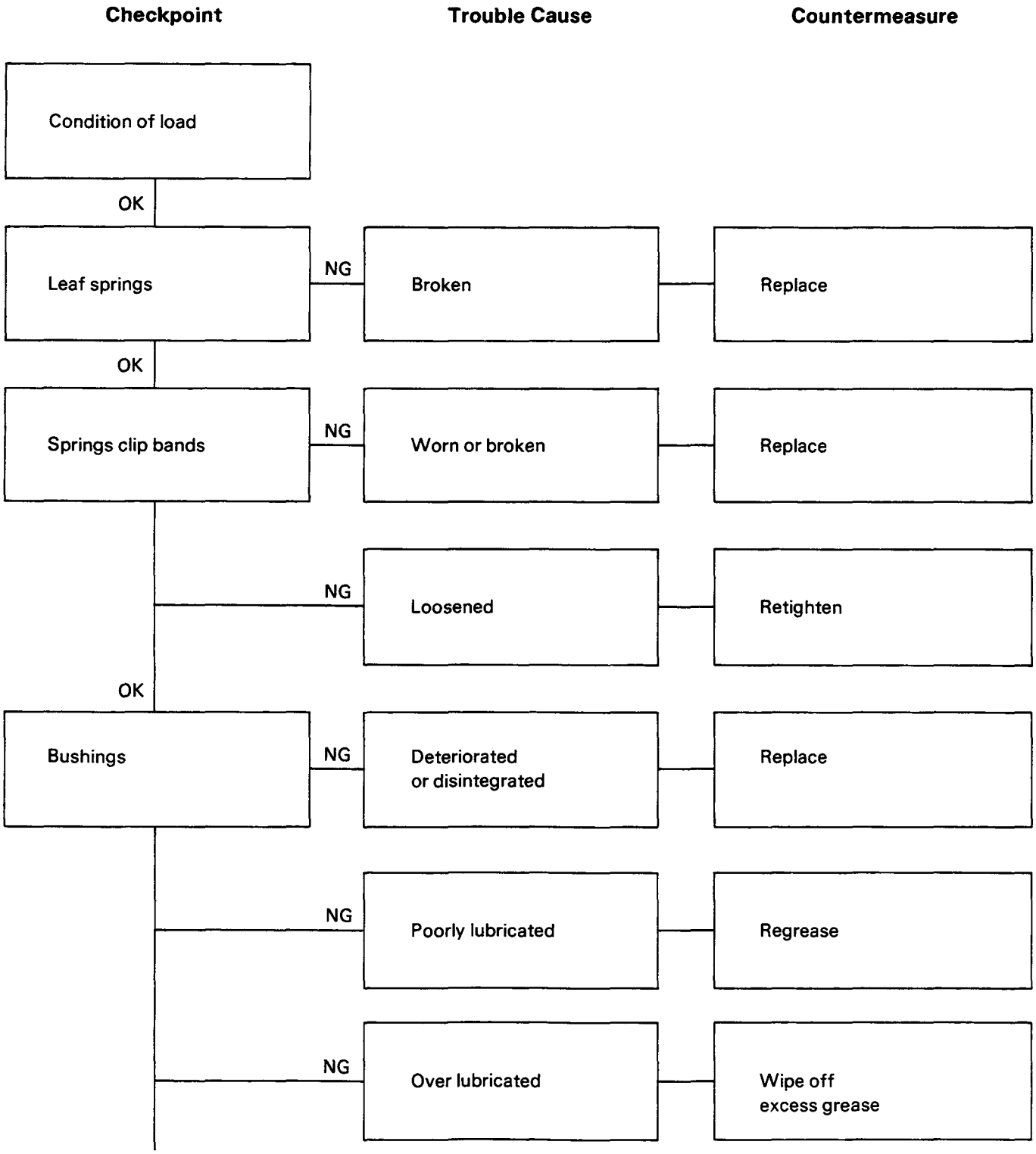

Continued on the next page

Checkpoint		Trouble Cause	Countermeasure
Continued from the previous page			
Parts for looseness in mount	NG	Loose	Retighten
	NG	Cracked or damaged	Replace

3. SPRING BREAKAGE

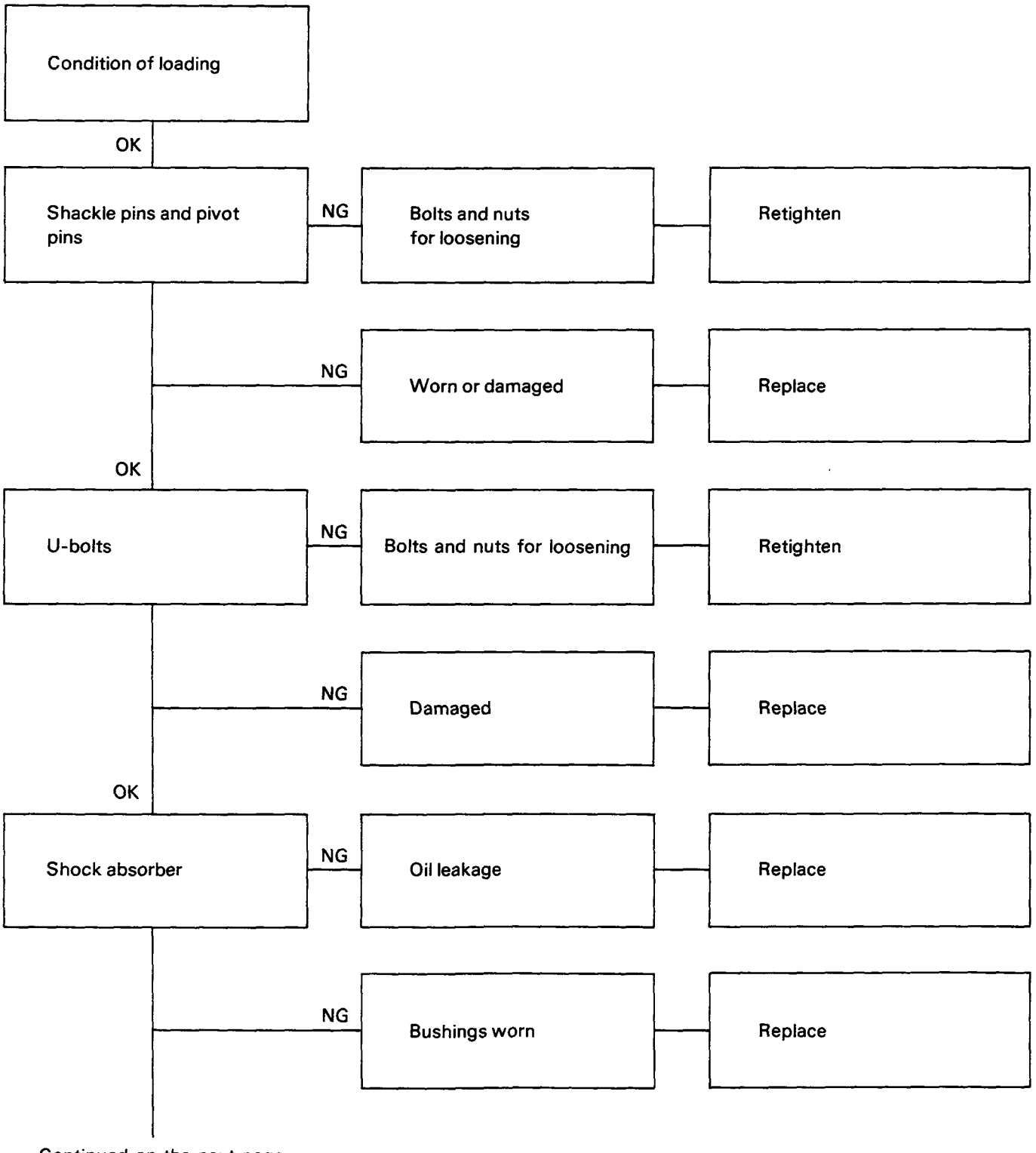

Continued on the next page

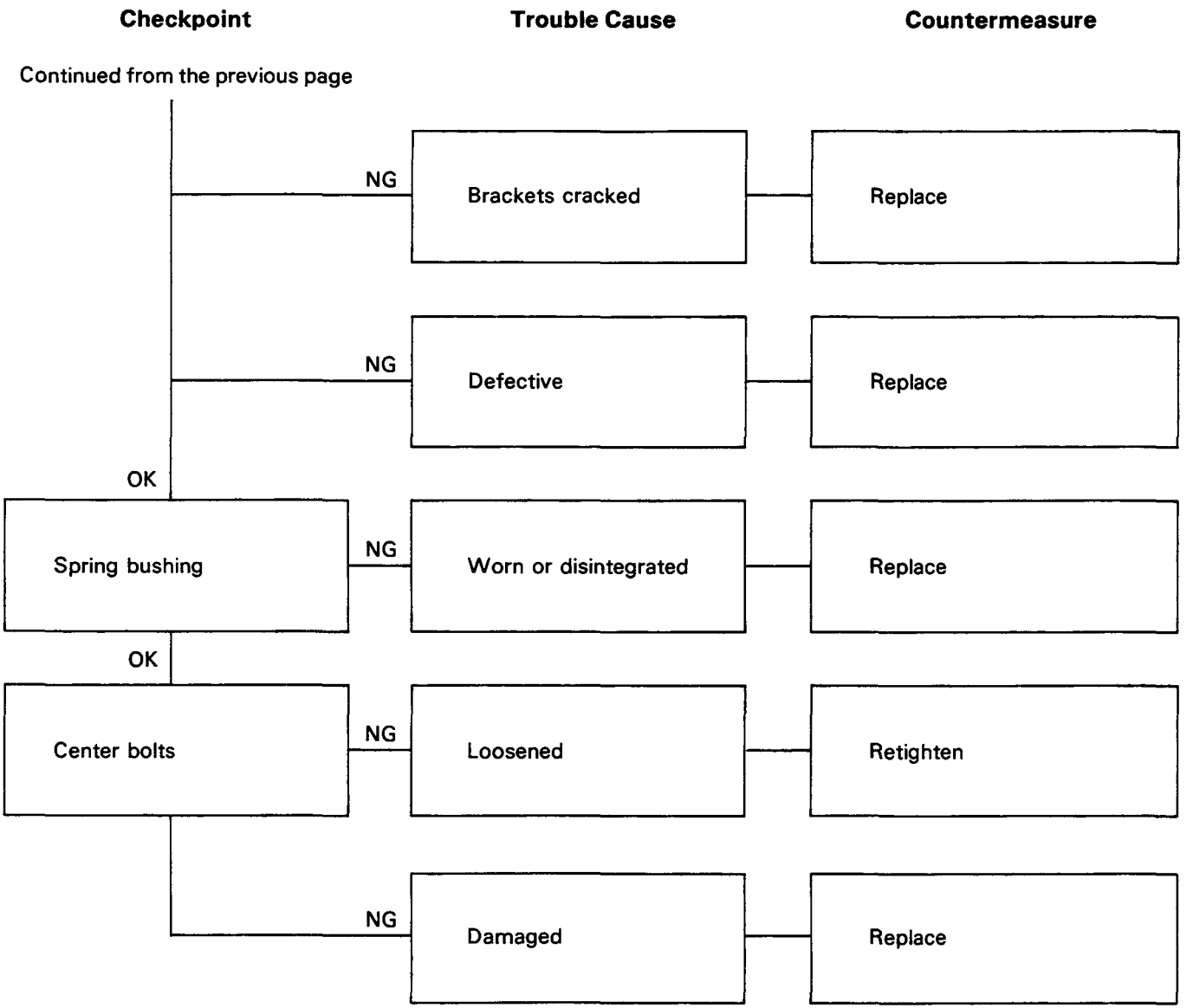
Checkpoint
Trouble Cause
Countermeasure
Continued from the previous page
NG
Brackets cracked
Replace
NG
Defective
Replace
OK
Spring bushing
NG
Worn or disintegrated
Replace
OK
Center bolts
NG
Loosened
Retighten
NG
Damaged
Replace

4. HARSHNESS

Checkpoint		Trouble Cause	Countermeasure
Road test vehicle (Noise has a certain pattern)	NO	Noise does not have any specific pattern	Replace tires
YES			
Tire inflation pressure	NG	Incorrect	Adjust
OK			
Tires for out of balance	NG	Incorrect	Adjust or replace
OK			
Bushings in suspension System	NG	Defective	Replace
OK			
Bushings in suspension system	NG	Loosen or broken	Retighten or replace

DELTA OPEL ISUZU SUZUKI

Hi - Tech

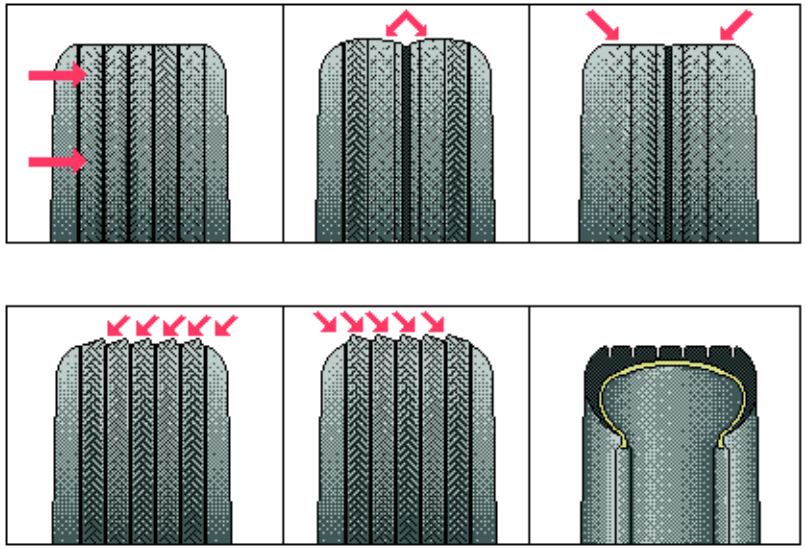

Index

Servicing

Specs.

Tyres

Inspection

KB TF 140
Wheels and Tyres

ISUZU

SECTION 3E
WHEELS AND TYRES

TABLE OF CONTENTS

	PAGE
Tyre Pressure Data	3E – 2
Torque Specification	3E – 3
Special Parts Fixing Nuts and Bolts	3E – 3
Wheels and Tyres	3E – 4
Tyre Designation	3E – 4
Servicing	3E – 5
Disassembly	3E – 7
Inspection and Repair	3E – 8
Reassembly	3E – 9
Troubleshooting	3E – 11

TYRE PRESSURE DATA

				TYRE PRESSURE (kPa)			
				UNLADEN		LADEN	
ITEM MODEL	MODEL CODE	TYRE SIZE	WHEEL SIZE	FRONT	REAR	FRONT	REAR
1 KB200 4X2 SWB/LWB	TFR12F/H	195 R14C	5J X 14	200	220	220	375
2 KB200 4X2 SWB	TFR12FL	205 R14C	6JJ X 14	200	220	220	310
3 KB260 4X2 LWB	TFR17H	195 R14C	5J X 14	200	220	220	375
4 KB260 4X2 SWB	TFR17FL	205 R14C	6JJ X 14	200	220	220	310
5 KB260 4X2 LWB/DCAB	TFR17HL/HDL	215 R15REINF	7JJ X 15	200	220	220	300
6 KB260 4X4 DCAB	TFS17HDL	245/70 R16C	7JJ X 16	200	220	220	300
7 KB260 4X4 LWB	TFS17H	215 R15REINF	7JJ X 15	200	220	220	300
8 KB250 D 4X2 SWB/LWB	TFR54F/H	195 R14C	5J X 14	200	220	220	300
9 KB250 D 4X2 LWB	TFR54HL	205 R14C	6JJ X 14	200	220	220	310
10 KB280 TD 4X2 LWB	TFR55H	195 R14C	5J X 14	200	220	220	375
11 KB280 TD 4X2 SWB	TFR55LL	205 R14C	6JJ X 14	200	220	220	310
12 KB280 TD 4X2 LWB/DCAB	TFR55HL/HDL	215 R15REINF	7JJ X 15	200	220	220	300
13 KB280 TD 4X4 DCAB	TFS55HDL	245/75 R15C	7JJ X 15	200	220	220	300
14 KB280 TD 4X4 LWB	TFS55HL	245/70 R16C	7JJ X 16	200	220	220	300

TORQUE SPECIFICATIONS

SPECIAL PARTS FIXING NUTS AND BOLTS

WHEEL AND TYRES

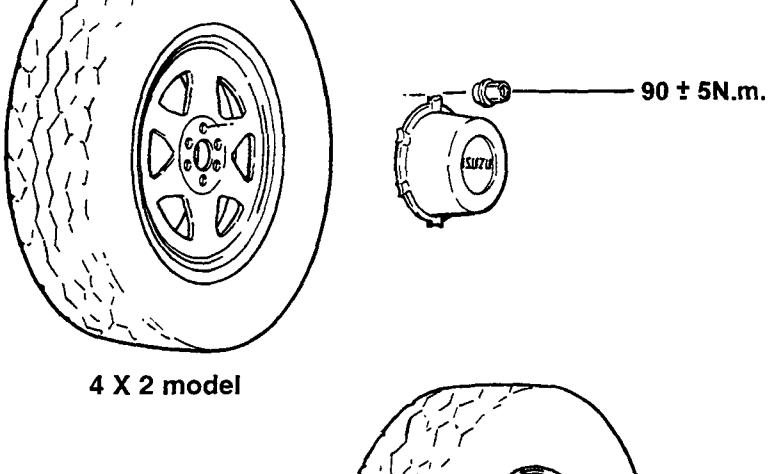

4 X 2 model

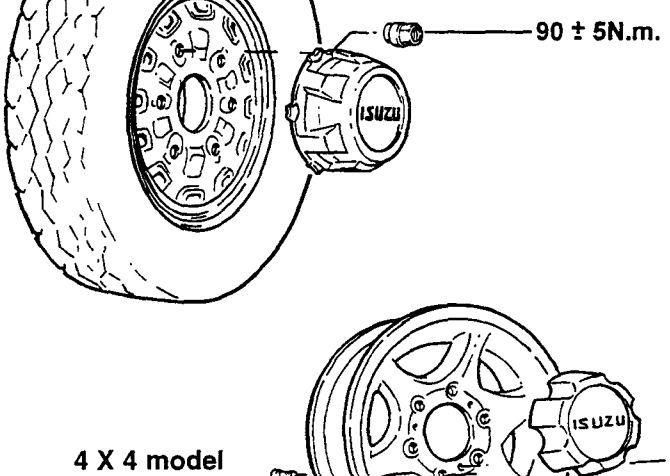

4 X 4 model

Steel Wheel / Alloy Wheel	90 ± 5 Nm

WHEELS AND TYRES

TYRE DESIGNATION (EXAMPLE)

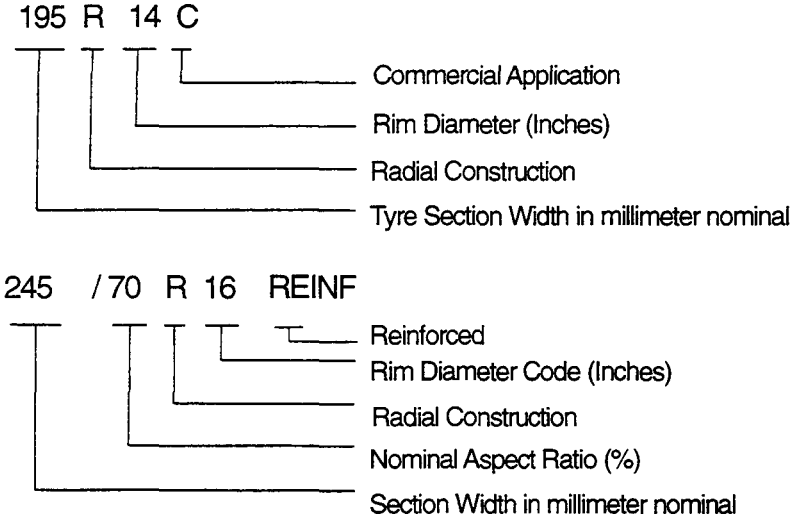

SERVICING

Servicing refers to general maintenance procedures to be performed by qualified service personnel.

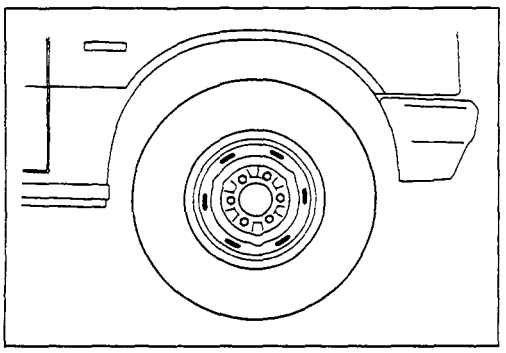

WHEEL NUT TORQUES

Wheel Nut Torque	N•m
Steel Wheel Alloy Wheel	90 ± 5 Nm

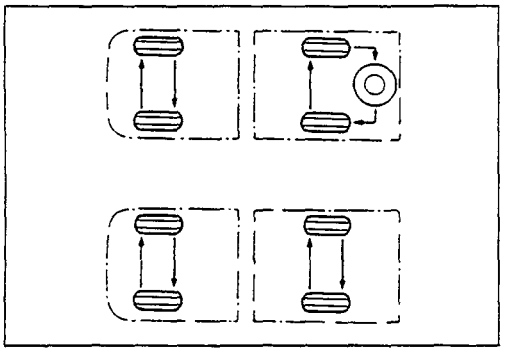

TYRE ROTATION

When the front tyre size and the rear tyre size are different, interchange front wheels and rotate the rear wheels as shown in the figure.

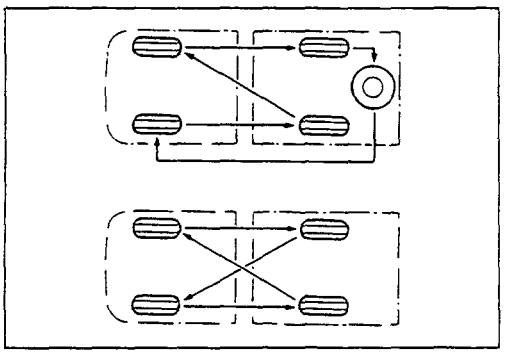

When the front and the rear tyre are the same size, rotate the wheels as shown in the figure.

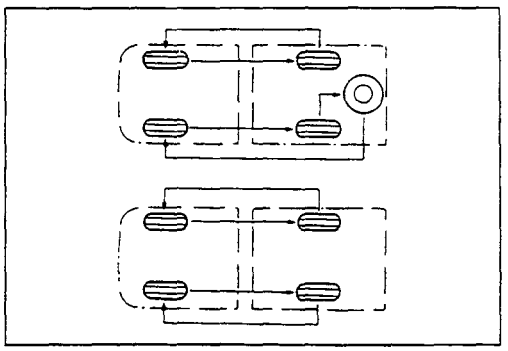

For of radial tyre interchange the front and the rear wheels on the same side as shown in the figure.

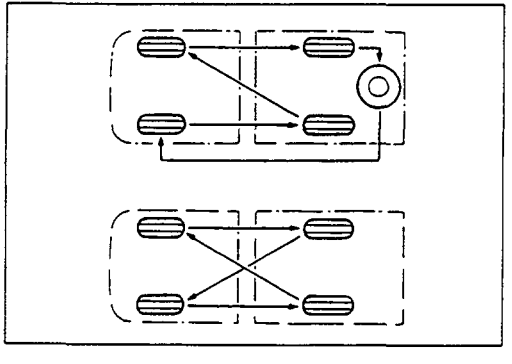

If one-sided tyre wear appears on radial tyre, rotate the wheel as shown in the figure.

Note:
After rotation, adjust the front and the rear tyre pressure and be sure to check wheel nut torque.

DISASSEMBLY

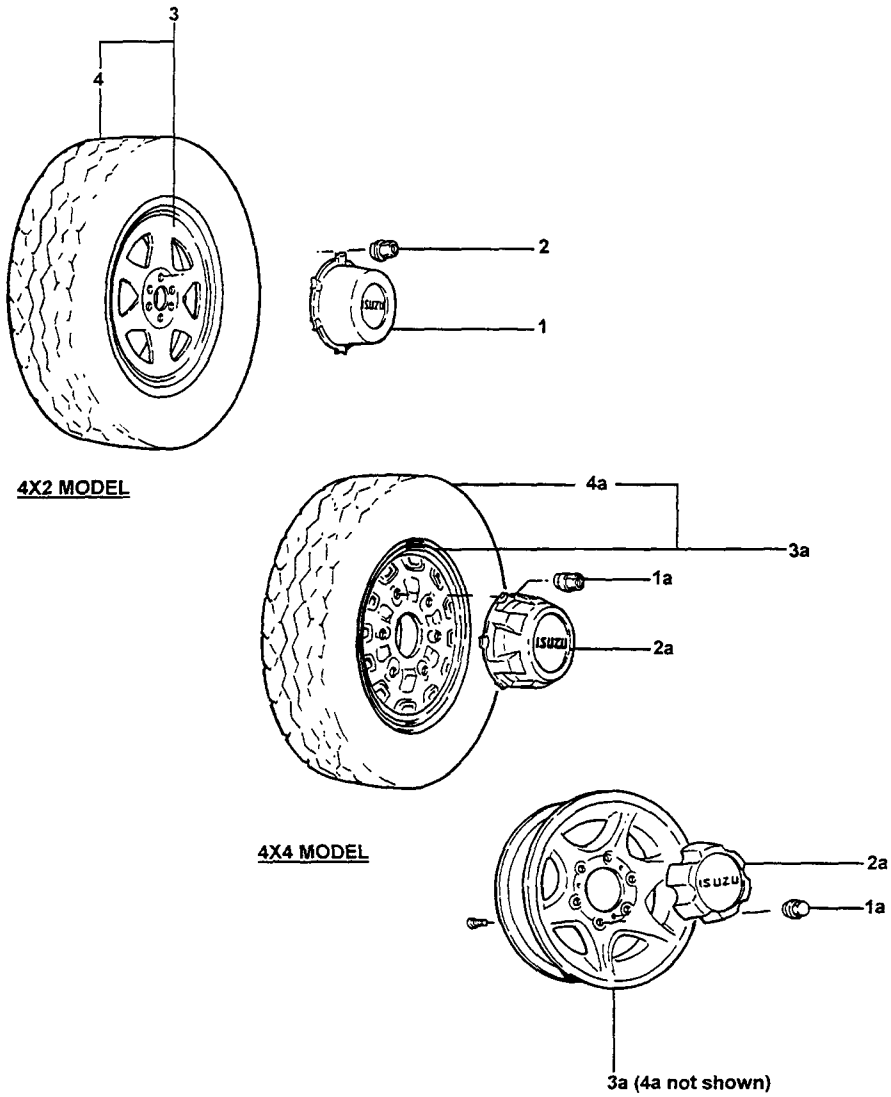

Disassembly Steps (for 4 x 2 model)

1. Wheel cap
2. Wheel nut
3. Wheel and tyre assembly
4. Tyre assembly

(for 4 x 4 model)

1a. Wheel nut

2a. Center cap

3a. Wheel and tyre assembly

4a. Tyre assembly

INSPECTION AND REPAIR

Make necessary correction or parts replacement if wear, damage or any other abnormal conditions are found through inspection.

Visual Check

Inspect all disassembled parts for wear, damage or other abnormal conditions.

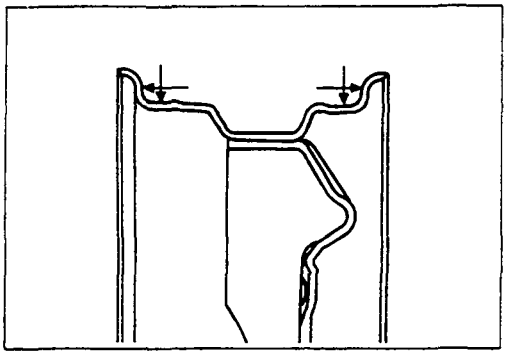

Measure Wheel Runout

mm(in)

Steel	Less than 1.2 (0.047)
Alloy	Less than 0,25 (0.01)

If the measured value exceed the specified limit, the wheel must be replaced.

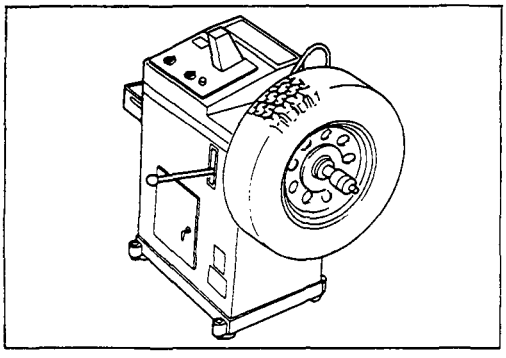

Measure Wheel Unbalance

Using a wheel balancing equipment.

Install on the side rim of the wheel a balance weight to offset unbalance.
Balance weight for the wheel should not exceed 170g in total, and 140g is the maximum amount for either side.

REASSEMBLY

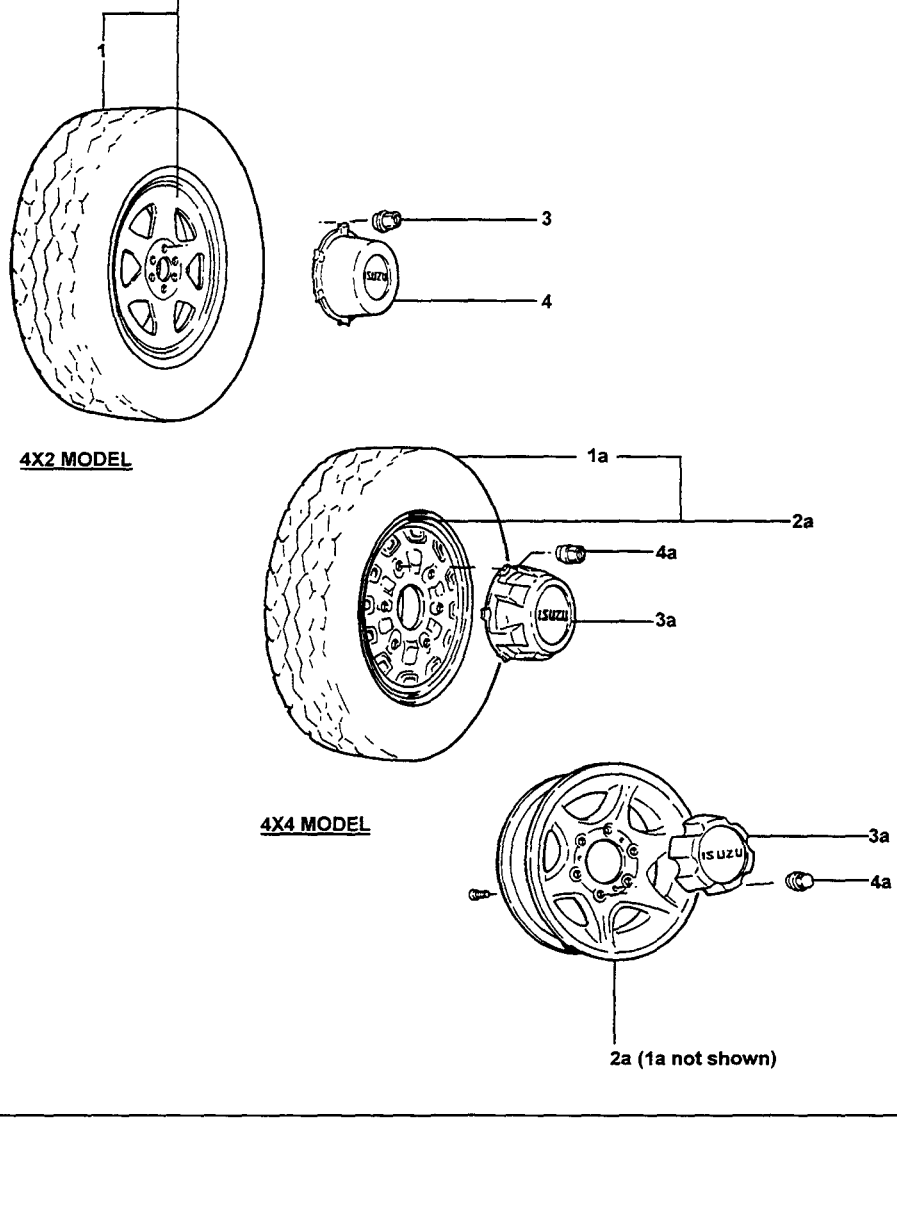

Disassembly Steps (for 4 x 2 model)

- ▲ 1. Tyre assembly
- ▲ 2. Wheel and tyre assembly
- ▲ 3. Wheel nut
- 4. Wheel cap

(for 4 x 4 model)

- ▲ 1a. Tyre assembly
- ▲ 2a. Wheel and tyre assembly
- 3a. Center cap
- ▲ 4a. Wheel nut

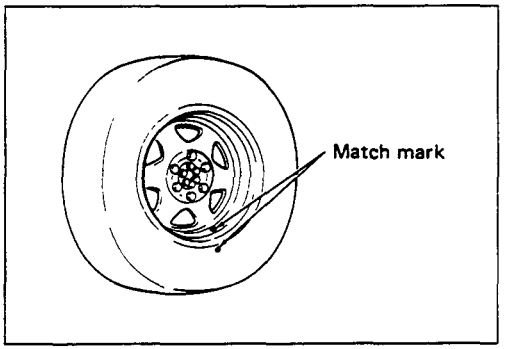

Important Operations

1 and 1a. Tyre Assembly

Align air valve - tyre balancing match marks (About 8 mm diameter paint mark.)

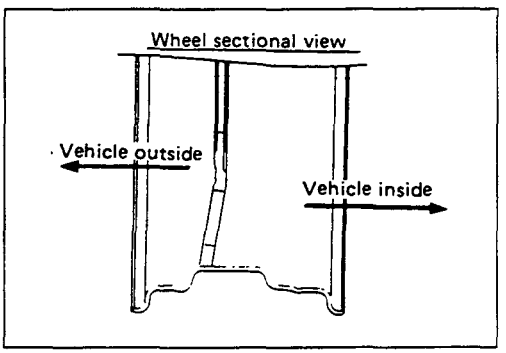

2 and 2a. Wheel and Tyre Assembly

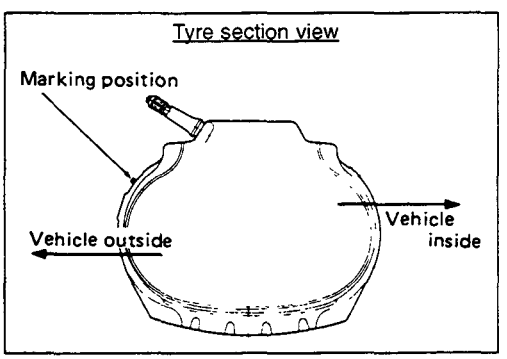

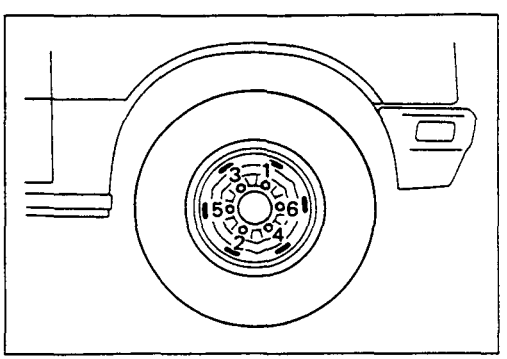

3 and 4a. Wheel Nut

Tighten wheel nuts in numerical order.

Wheel Nut Torque	N•m
Steel Wheel Aluminum Wheel	90 ± 5 Nm

Typical examples of abnormal tyre tread wear and major causes:

CAUTION:

Similar wear patterns can be caused by worn suspension parts, misalignment of wheels and tyres, and other suspension related problems.

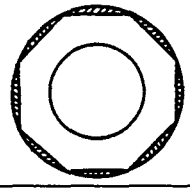

Spotty wear — wear localized on shoulder sections. In extreme cases, the tyre becomes polygonal in shape.

- Tyre or wheel out of round or distorted.
- Hub or knuckle out of round or distorted.
- Play in hub bearings or ball joints.
- Rotating parts out of balance.

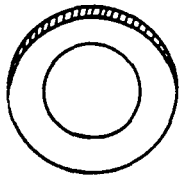

Tread wear one-sided.

- Rotating parts out of balance.
- Tyre or wheel out of round.
- Hub or knuckle out of round or distorted.

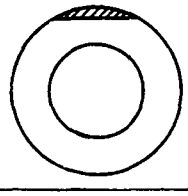

Localized tread wear.

- Once spotty wear develops in tread due to hard braking or abrupt starting, localized wear tends to be accelerated.

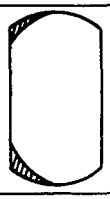

Shoulder wear (generally wear develops on outer shoulder).

- Camber or toe-in incorrect.
- Shoulder wear caused by repeated hard-cornering.

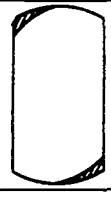

Wear on shoulders at points opposed to each other.

- Tyre or wheel out of round or distorted.
- Play in bearings or ball joint.

Premature wear on shoulders.

- Flexing of tire excessive due to under-inflation.

One-sided feather edging.

- Wear caused by repeated hard-cornering.
- Camber or toe-in incorrect.

DELTA OPEL ISUZU SUZUKI

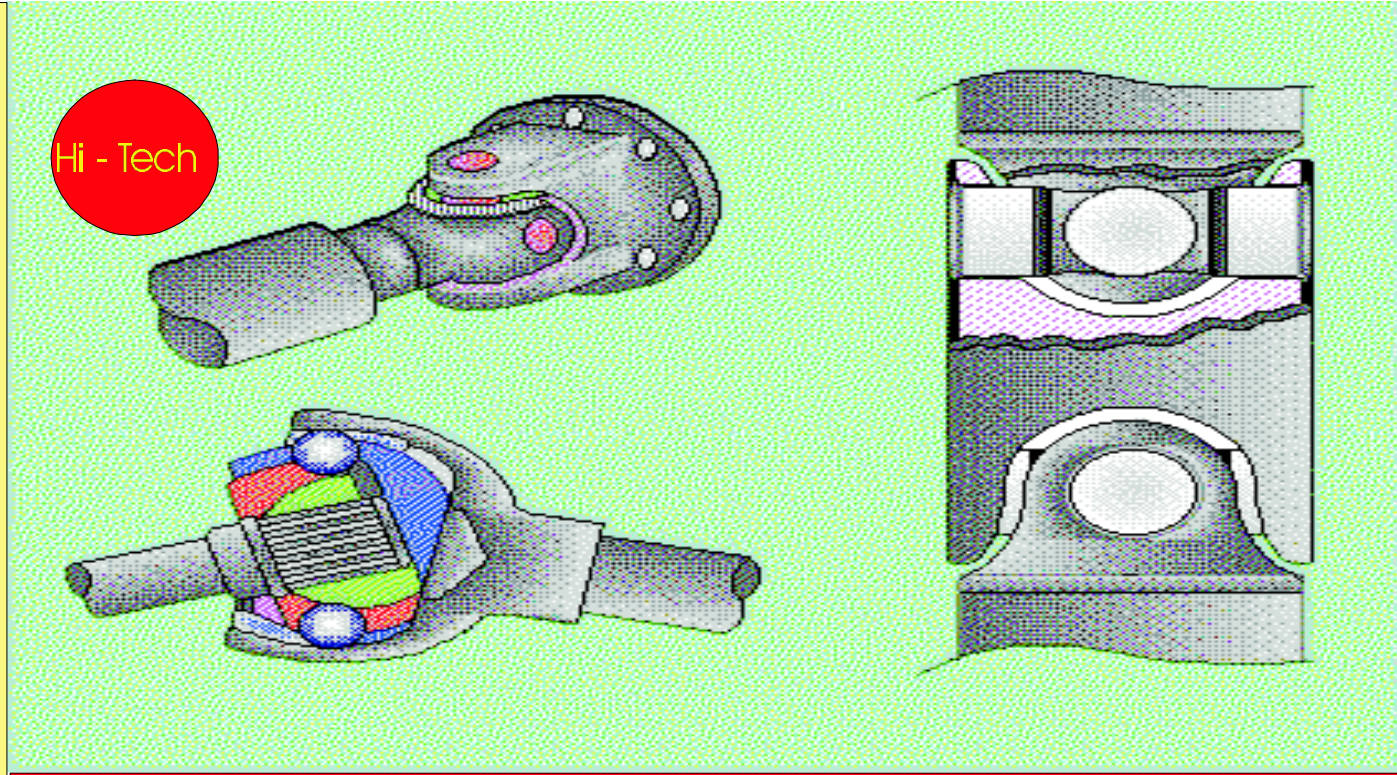

Index

Special Parts

Centre Bearing

Assembly

KB TF 140
Propshaft

ISUZU

SECTION 4A
PROPELLER SHAFT

TABLE OF CONTENTS

PAGE

Main Data and Specifications . . . . . 4A – 2
Special Parts Fixing Nut and Bolt . . . . . 4A – 4
Propeller Shaft Assembly . . . . . 4A – 6
General Description . . . . . 4A – 6
Removal and Installation . . . . . 4A – 7
Disassembly . . . . . 4A – 9
Inspection and Repair . . . . . 4A – 10
Reassembly . . . . . 4A – 12
Centre Bearing (4ZE1, 4JB1T, 4ZC1, 4JA1 Engine) . . . . . 4A – 14
Disassembly and Reassembly . . . . . 4A – 14

MAIN DATA AND SPECIFICATIONS

REAR PROPELLER SHAFT

4x2 Model

mm(in)

		Short Wheel Base	
Engine Model		4ZC1	4JA1
Transmission Type		MT, 5	MT, 5
Outside Diameter	mm (in)	82.6 (3.25)	75.5 (2.95)
Inside Diameter	mm (in)	79.4 (3.13)	71.8 (2.83)
Length 1st	mm (in)	1293 (50.91)	1278 (50.31)
2nd	mm (in)	—	—
Spline Outside diameter	mm (in)	29.87 (1.18)	29.87 (1.18)

		Long Wheel Base					
Engine Model		4ZE1		4ZC1	4JA1		4JB1T
Transmission Type		MT, 5	AT	MT, 5	MT, 5	MT, 5 (6WF)	MT, 5
Outside Diameter	mm (in)	68.9 (2.71)	68.9 (2.71)	63.5 (2.50)	63.5 (2.50)	68.9 (2.71)	68.9 (2.71)
Inside Diameter	mm (in)	64.3 (2.53)	64.3 (2.53)	60.3 (2.37)	60.3 (2.37)	64.3 (2.53)	64.3 (2.53)
Length 1st	mm (in)	644.5 (25.37)	565.5 (22.26)	644.5 (25.37)	629.5 (24.78)	644.5 (25.37)	644.5 (25.37)
2nd	mm (in)	927 (36.50)	927 (36.50)	949 (37.36)	949 (37.36)	927 (36.50)	927 (36.50)
Spline Outside diameter	mm (in)	29.87 (1.18)	29.87 (1.18)	29.87 (1.18)	29.87 (1.18)	29.87 (1.18)	29.87 (1.18)

* AT - Automatic Transmission
MT - Manual Transmission, 4 speed and 5 speed
MT, 5 - Manual Transmission, 5 speed
MT, 4 - Manual Transmission, 4 speed
6ST - Low gear Rear Axle and Transmission

4x4 Model

		Short Wheel Base			
Engine Model		4ZC1		4JA1	
Rear Axle size		MT, 5 (6WF)	MT, 5	MT, 5 (6WF)	MT ,5
Outside Diameter	mm (in)	63.5 (2.50)	65 (2.56)	63.5 (2.50)	65 (2.56)
Inside Diameter	mm (in)	60.3 (2.37)	59.8 (2.35)	60.3 (2.37)	59.8 (2.35)
Length 1st	mm (in)	510.5 (20.10)	449.5 (17.70)	495.5 (19.51)	361.5 (14.23)
2nd	mm (in)	608 (23.94)	582 (922.91)	608 (23.94)	582 (22.91)
Spline Outside diameter	mm (in)	29.87 (1.18)	29.87 (1.18)	29.87 (1.18)	29.87 (1.18)

		Long Wheel Base					
Engine Model		4ZE1	4ZC1		4JA1		4JB1T
Rear Axle size		MT, 5	MT, 5	MT, 5 (6WF)	MT, 5	MT, 5 (6WF)	MT, 5
Outside Diameter	mm (in)	68.9 (2.71)	63.5 (2.50)	68.9 (2.71)	63.5 (2.50)	68.9 (2.71)	68.9 (2.71)
Inside Diameter	mm (in)	64.3 (2.53)	60.3 (2.37)	64.3 (2.53)	60.3 (2.37)	64.3 (2.53)	64.3 (2.53)
Length 1st	mm (in)	451.5 (17.78)	510.5 (20.10)	451.5 (17.78)	495.5 (19.51)	482 (19.00)	482 (19.00)
2nd	mm (in)	927 (36.50)	949 (37.36)	927 (36.50)	949 (37.36)	927 (36.50)	927 (36.50)
Spline Outside diameter	mm (in)	29.87 (1.18)	29.87 (1.18)	29.87 (1.18)	29.87 (1.18)	29.87 (1.18)	29.87 (1.18)

* AT - Automatic Transmission
MT - Manual Transmission, 4 speed and 5 speed
MT, 5 - Manual Transmission, 5 speed
MT, 4 - Manual Transmission, 4 speed
6WF - Low gear Transmission

SPECIAL PARTS FIXING NUT AND BOLT

REAR PROPELLER SHAFT (Long Wheel Base Model)

kg·m(lb.ft/N·m)

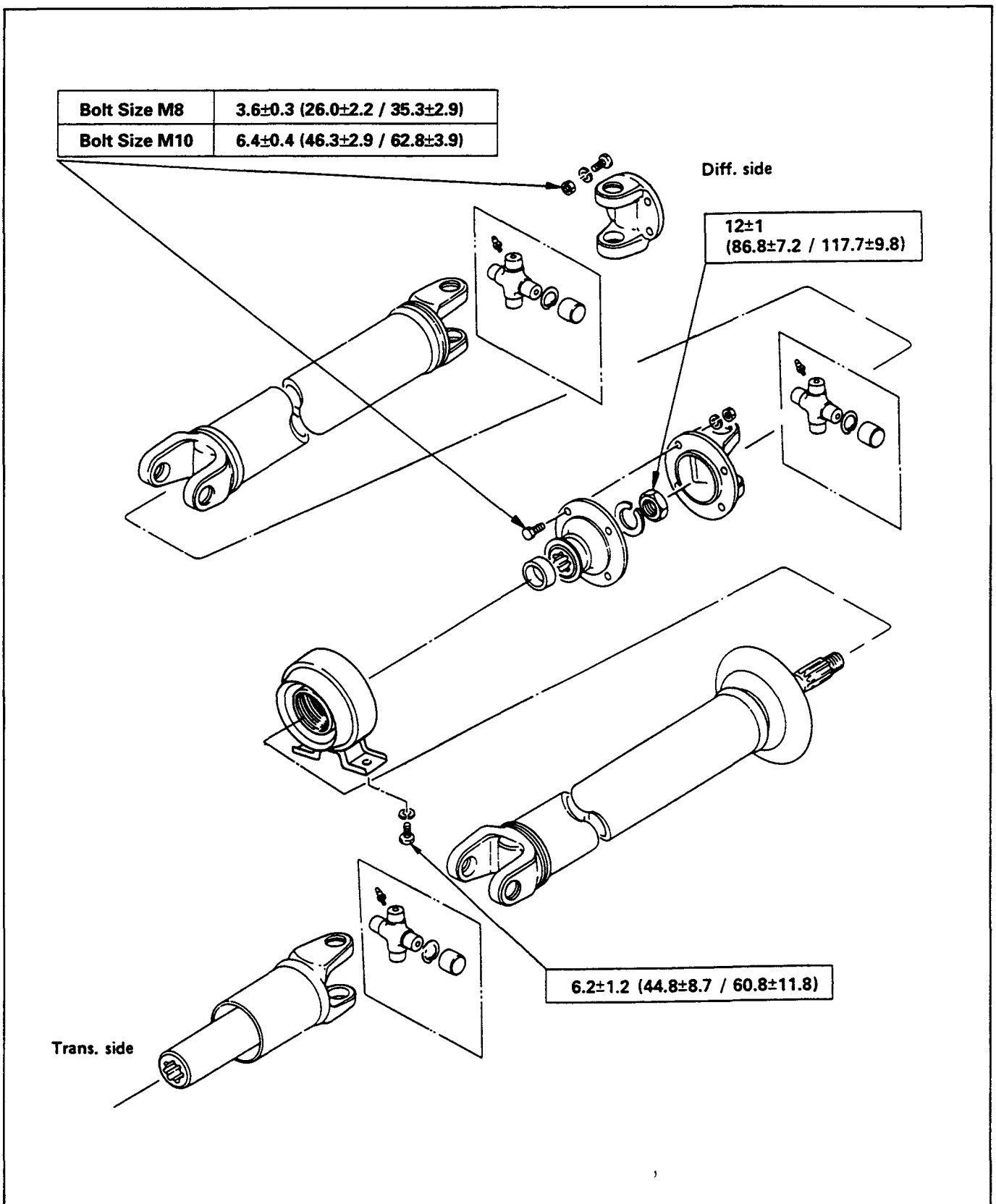

Bolt Size M8	3.6±0.3 (26.0±2.2 / 35.3±2.9)
Bolt Size M10	6.4±0.4 (46.3±2.9 / 62.8±3.9)

REAR PROPELLER SHAFT (Short Wheel Base Model)

kg·m(lb.ft/N·m)

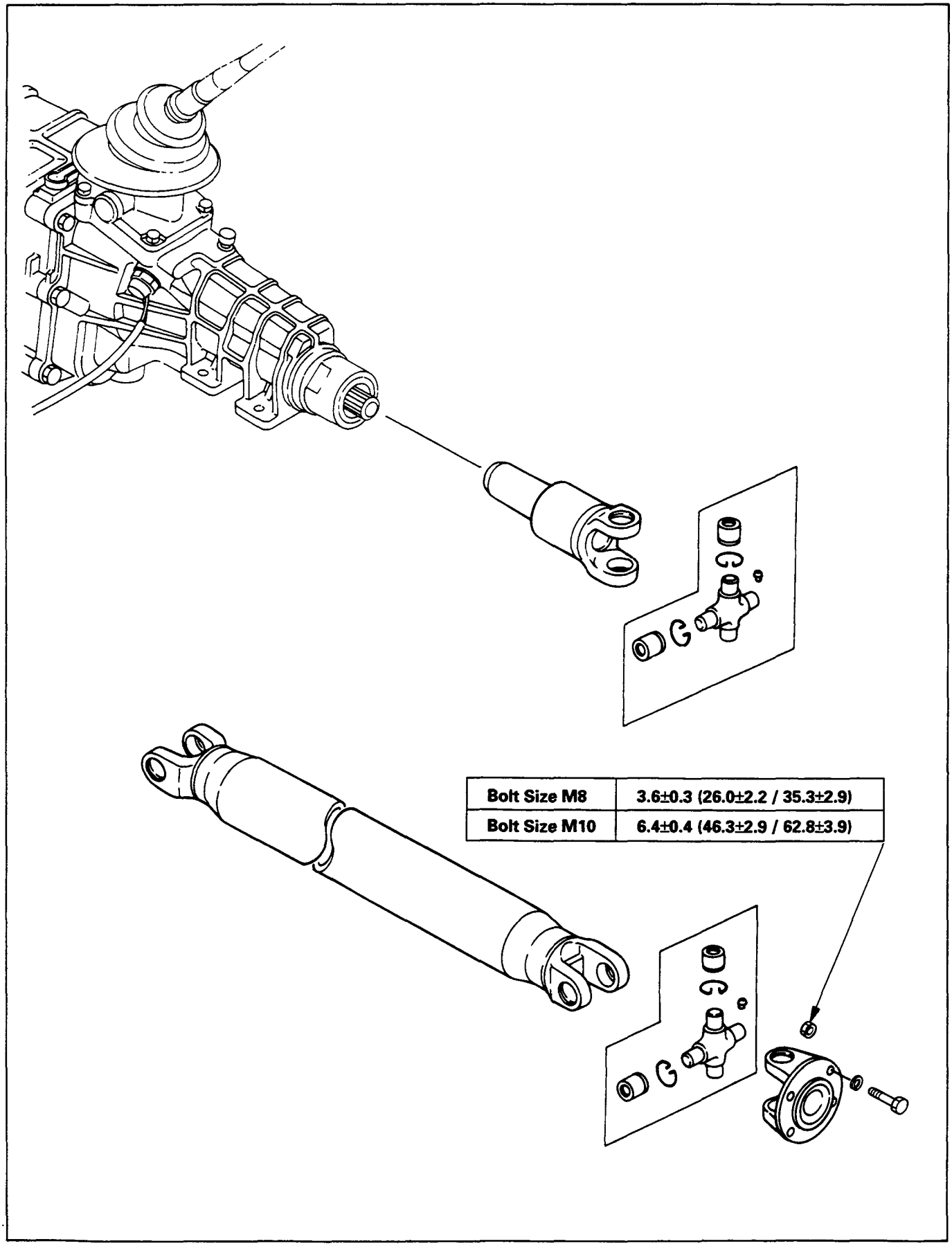

Bolt Size M8	3.6±0.3 (26.0±2.2 / 35.3±2.9)
Bolt Size M10	6.4±0.4 (46.3±2.9 / 62.8±3.9)

PROPELLER SHAFT ASSEMBLY

GENERAL DESCRIPTION

REAR PROPELLER SHAFT

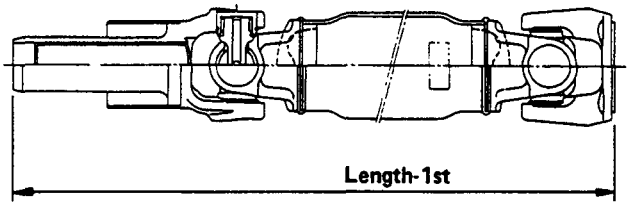

4 X 2 Long

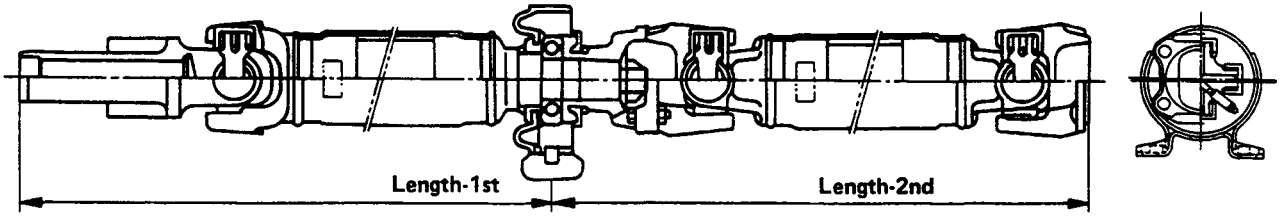

4 X 4

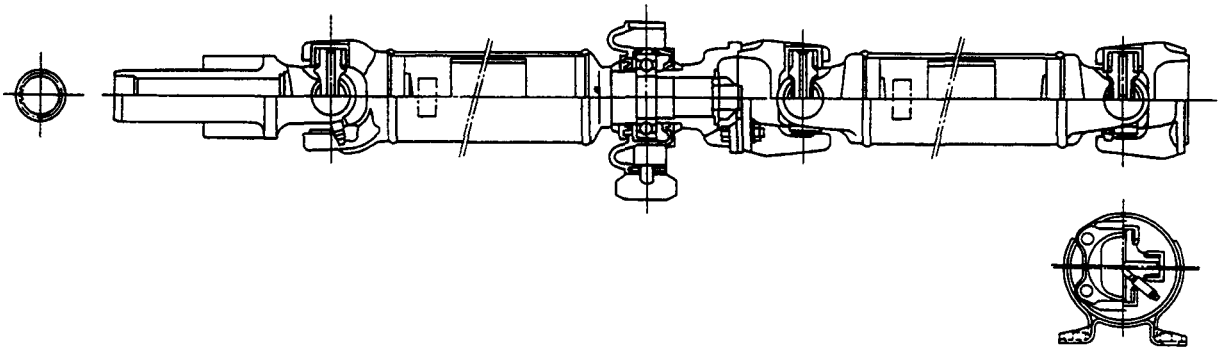

REMOVAL AND INSTALLATION

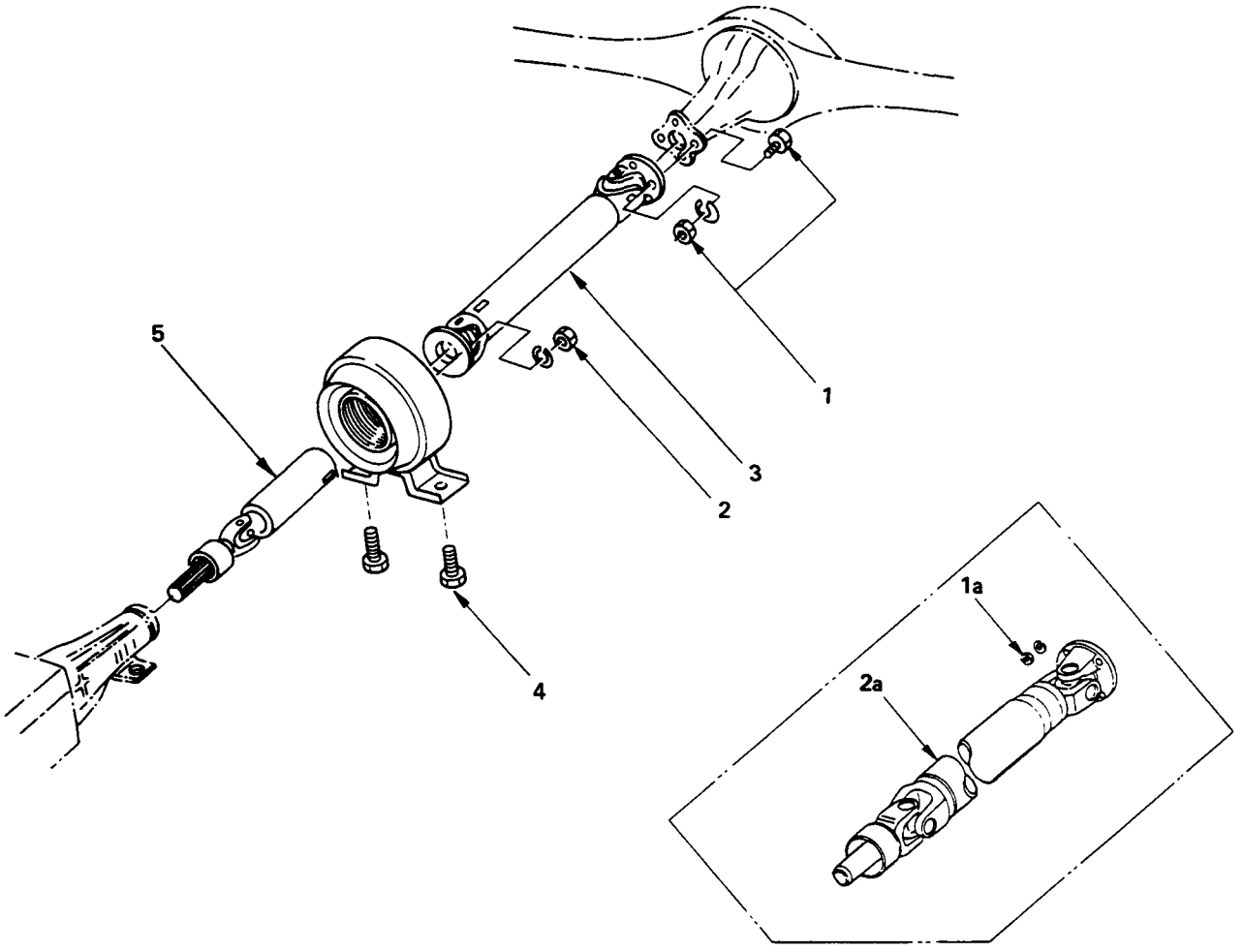

Short wheel base model (4 X 2)

Since the propeller shaft assembly is carefully balanced, a scribe mark should be made on the flange before removal.

Install the parts by aligning scribe marks made during removal.

Removal Steps

1.1a Bolt ; differential side
2. Bolt ; flange
▲ 2a. Propeller shaft assembly
3. Propeller shaft assembly ; 2nd
4. Bolt ; center bearing bracket
▲ 5. Propeller shaft assembly ; 1st

Installation Steps

5. Propeller shaft assembly ; 1st
▲ 4. Bolt ; center bearing bracket
3. Propeller shaft assembly ; 2nd
▲ 2. Bolt ; flange
2a. Propeller shaft assembly
▲ 1.1a Bolt ; differential side

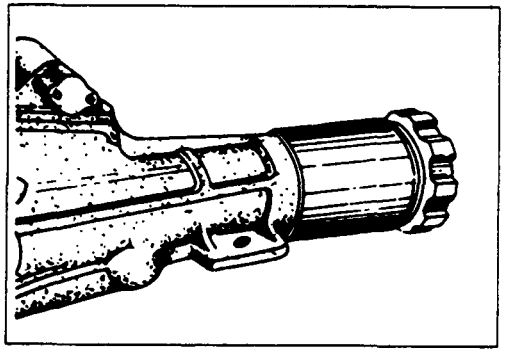

Important Operation — Removal

2a. Propeller Shaft Assembly

5. Propeller Shaft Assembly : 1st

Install a plug at the transmission rear cover to prevent loss of the transmission oil.

Important Operations — Installation

4. Bolt ; Center Bearing Bracket

Bolt Torque	kg·m(lb.ft/N·m)
6.2 ± 1.2 (44.8 ± 8.7/60.8 ± 11.8)	

2. Bolt ; Flange

Bolt Torque	kg·m(lb.ft/N·m)
Bolt size M10	6.4±0.4 (46.3±2.9/62.8±3.9)
Bolt size M8	3.6±0.3 (26±2.2/35.3±2.9)

1.1a. Bolt ; differential side

Bolt Torque	kg·m(lb.ft/N·m)
Bolt size M10	6.4±0.4 (46.3±2.9/62.8±3.9)
Bolt size M8	3.6±0.3 (26±2.2/35.3±2.9)

DISASSEMBLY

UNIVERSAL JOINT

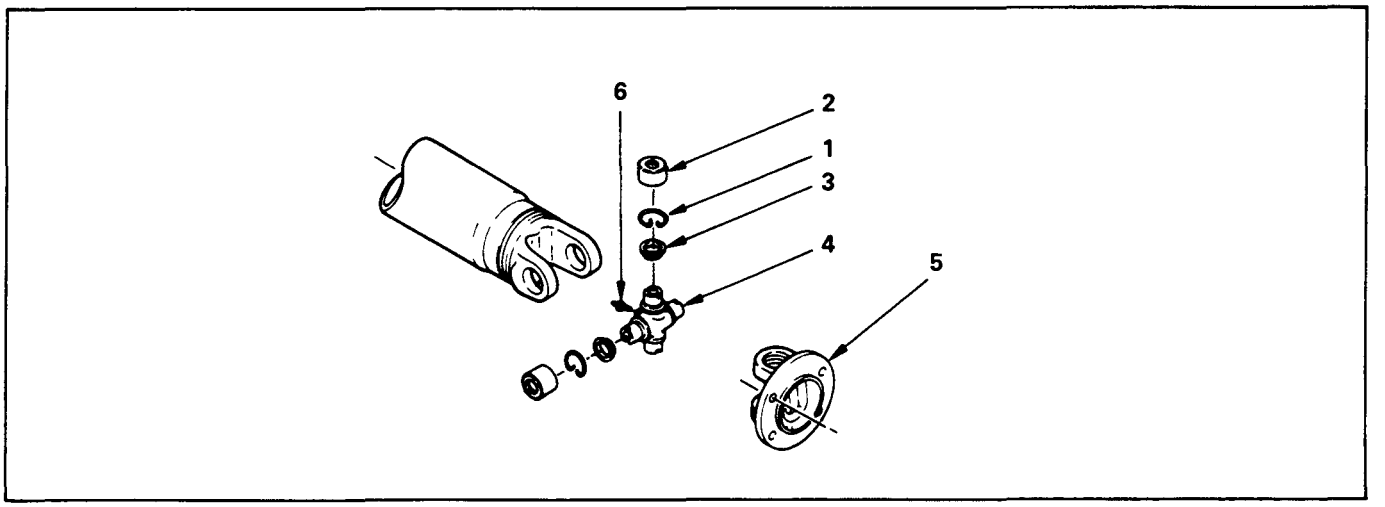

Disassembly Steps

1. Snap ring
▲ 2. Needle roller bearing
3. Seal
4. Spider
5. Flange yoke
6. Grease fitting (4x4 model only)

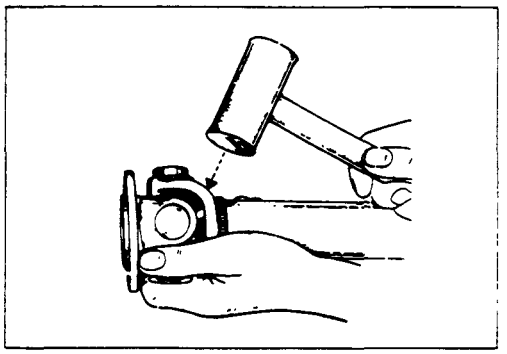

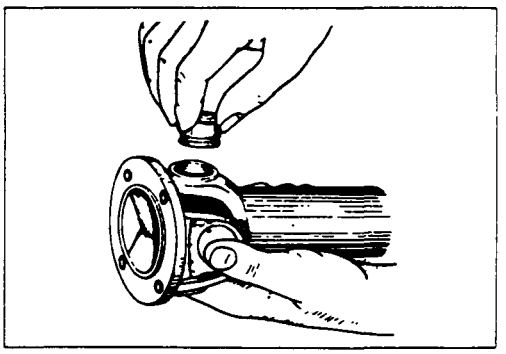

Important Operation

2. Needle Roller Bearing

(1) Tap out the bearing by gently striking the shoulder of the yoke.
Using a mallet or a copper hammer.

(2) As the yoke is tapped, the needle roller bearing will come out gradually, permitting easy removal by hand.

INSPECTION AND REPAIR

Make all necessary adjustments, repairs, and part replacements if wear, damage, or other problems are discovered during inspection.

Spider
Needle roller bearing
Yoke
Flange
Center bearing
Cushioning rubber
Bracket

Visual Check

Inspect following parts for wear, damage, or other abnormal conditions.

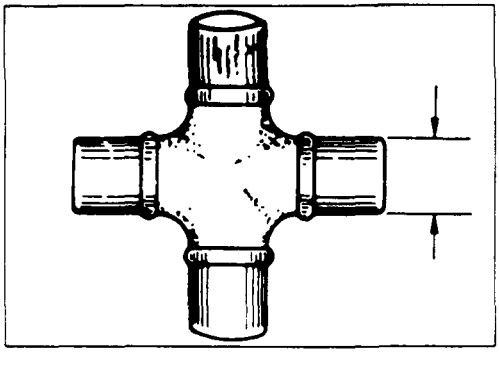

Outside Diameter of Spider Pins

mm(in)

Standard	Limit
17 (0.67)	16.90 (0.665)

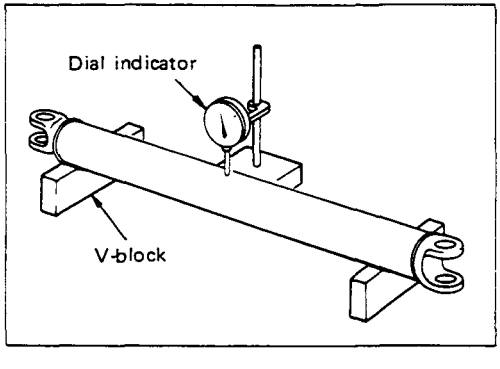

Propeller Shaft Run-Out

Support the ends of the propeller shaft on V-blocks and check for run-out by holding the probe of a dial indicator in contact with the center part of the shaft.
If the amount of run-out is beyond the standard value for assembly, correct with a bench press or replace the shaft with a new one.

mm(in.)

Standard	Limit
0.3 (0.012)	0.5 (0.02)

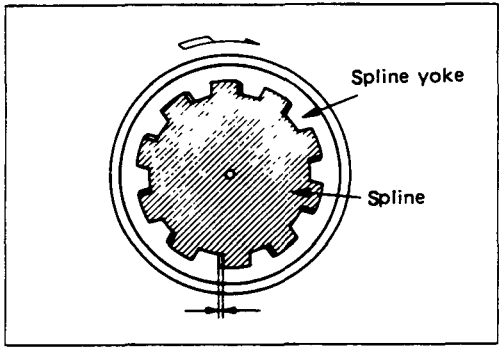

Play in the Splines in the Normal Direction of Rotation

Check the amount of play in the sleeve yoke and the propeller shaft splines in the direction of rotation using a pointed feeler gauge.

mm(in)

Standard	Limit
0.06 – 0.14 (0.002 – 0.006)	0.3 (0.012)

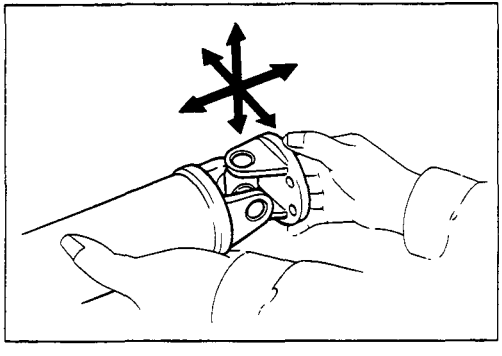

Play in Spider Bearing

(1) Check the spider bearings for wear or damage.

(2) Check the amount of axial and radial play in spider bearing by moving the yoke back and forth on the spider axes and shaft axis.

mm(in.)

Limit	0.5 (0.02)

If the limit is exceeded, replace the shaft assembly.

REASSEMBLY

UNIVERSAL JOINT

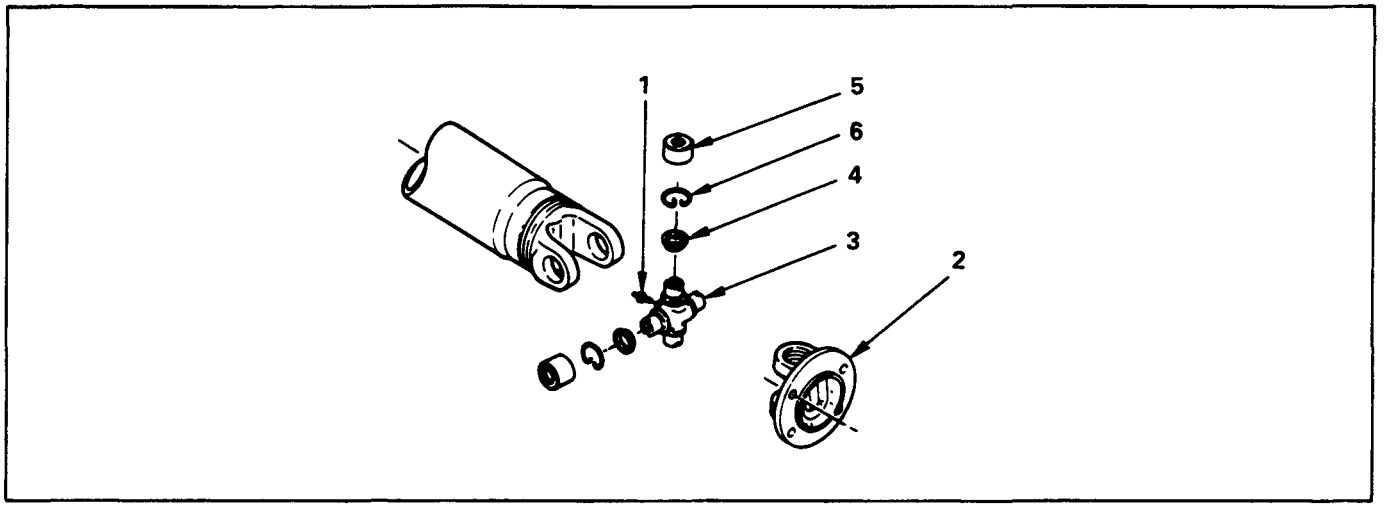

1. Grease fitting (4x4 model only)
2. Flange yoke
3. Spider
▲ 4. Seal
▲ 5. Needle roller bearing
▲ 6. Snap ring

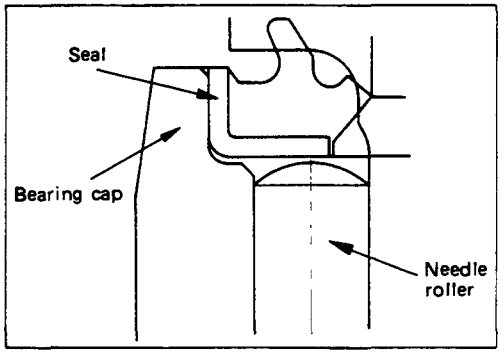

Important operations

4. Seal

Discard the used seal and install a new one.

Push the seal in until its outer surface is flush against the bearing cap surface.

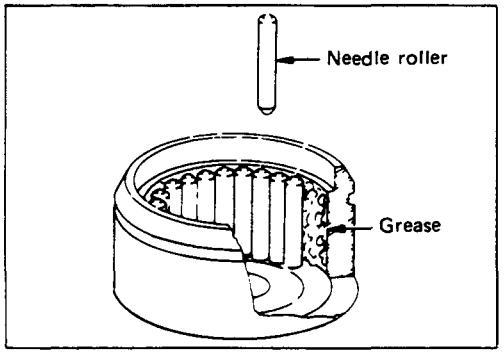

5. Needle Roller Bearing

(1) Apply a molybdenum-disulfide grease or multipurpose type grease NLGI No. 2 to the bearing cap inner surface and seal lip.
Install the needle rollers.

Amount of grease required	g(oz)
Approx. 1.2 (0.042)	

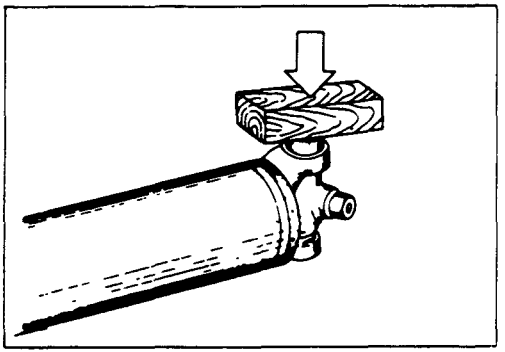

(2) Attach the spider to the yoke and then insert the needle roller bearing cap into the hole by using a wood block and a hammer or a press.

6. Snap Ring

When the bearing cap is in position, select and install a snap ring of suitable thickness so that the end play of the spider pin is held within 0.1 mm. (0.004 in.).
Select the thickest snap ring which can be fitted into the groove at the other end.

mm(in.)

Snap ring thickness	Identify color
1.5 (0.059)	Blue
1.545 (0.061)	White
1.59 (0.063)	Yellow
1.635 (0.064)	Green
1.68 (0.066)	Not color

CENTER BEARING (4ZE1, 4JG2T, 4JB1T, 4ZD1, 4JA1 Engine)

DISASSEMBLY AND REASSEMBLY

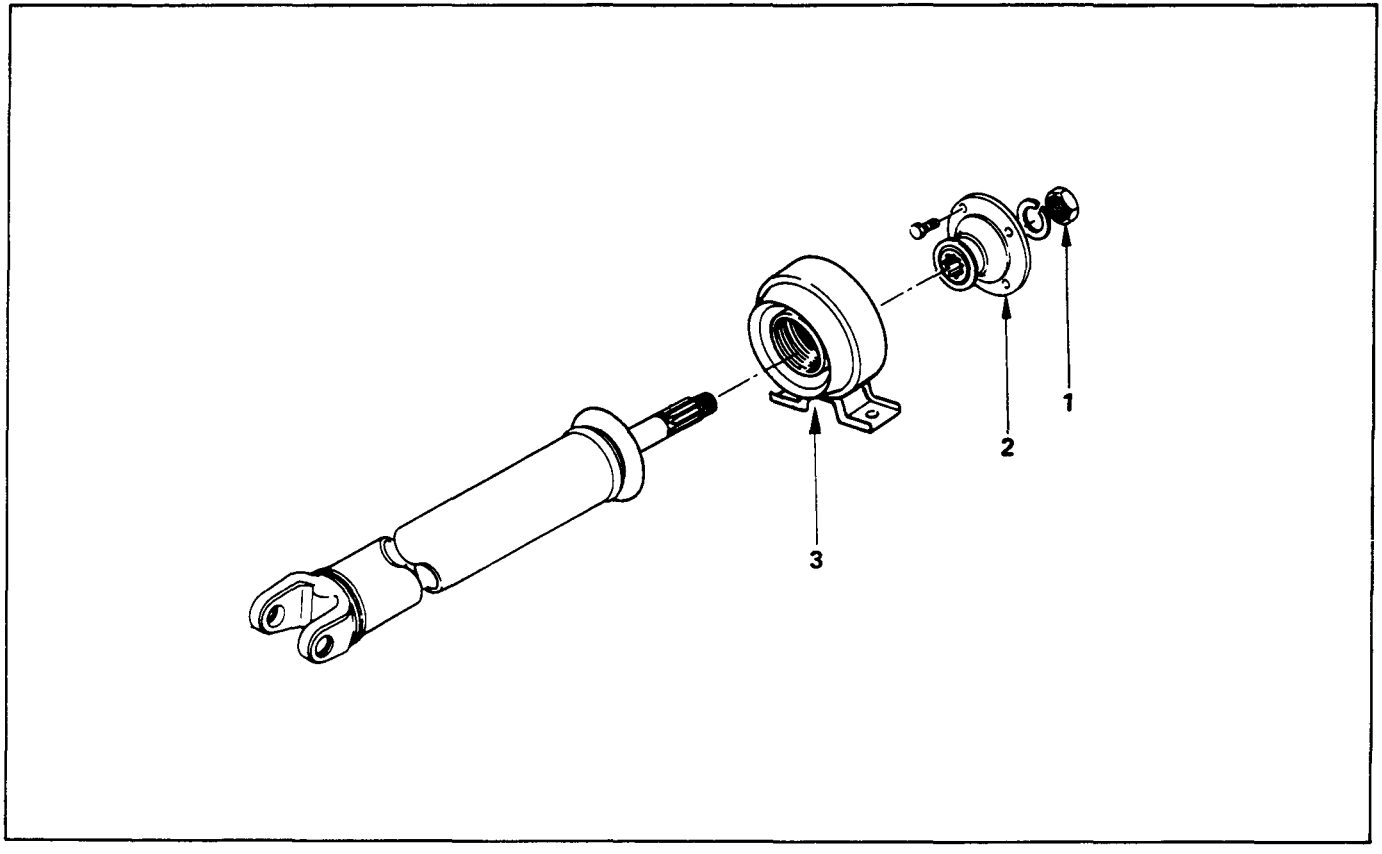

Disassembly Steps

1. Lock nut
▲ 2. Flange
3. Bearing assembly

Reassembly Steps

▲ 3. Bearing assembly
▲ 2. Flange
▲ 1. Lock nut

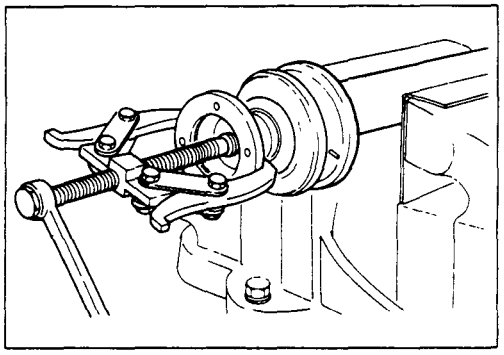

Important Operations — Disassembly

2. Flange

Use a suitable remover.

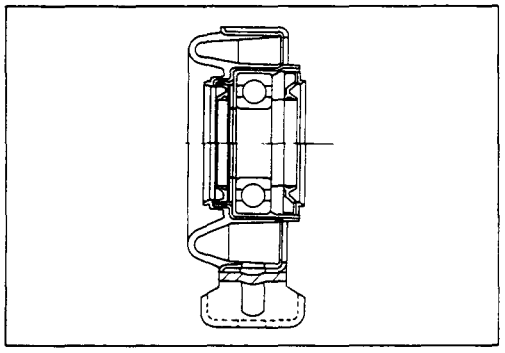

Important Operations — Reassembly

3. Bearing assembly

Clean the bearing fitting face.

Repack the grease.

Amount of grease required g(oz)	Approx. 12 (0.42)

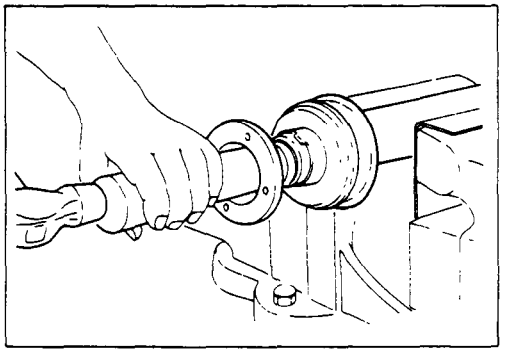

2. Flange

Installer : 5-8522-0034-0
(J-6403-C)

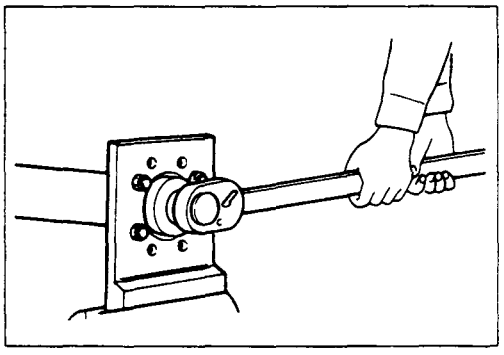

1. Lock nut

Lock nut Torque	kg·m(lb.ft/N·m)
12 (86.8/117.7)	

(1) Discard the flange nut and install a new one.

(2) Stake the outer face of the flange nut against the slot in the shaft.

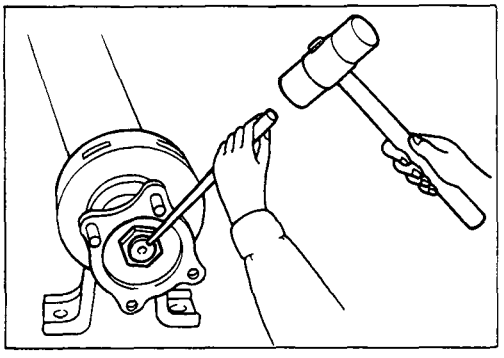

DELTA OPEL ISUZU SUZUKI

Hi - Tech

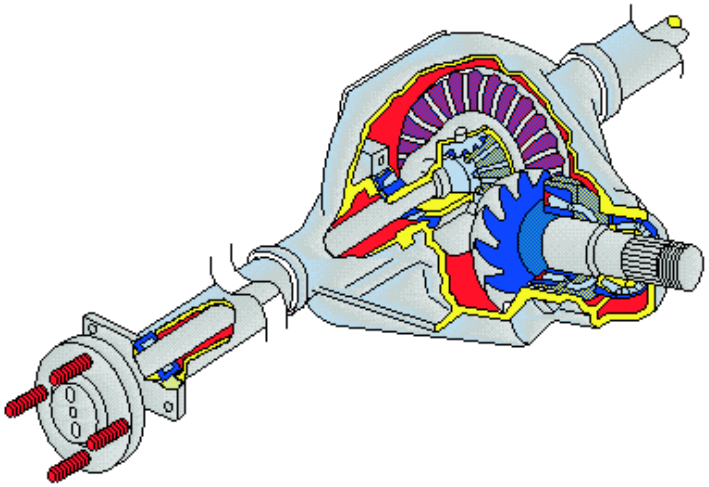

Index

Servicing

Specs.

Shaft

Diff

KB TF 140
Rear Axle

ISUZU

SECTION 4B
REAR AXLE

TABLE OF CONTENTS

	PAGE
Model variations and pinion assemblies	4B– 3
Main data and specifications	4B– 4
Special tools	4B– 5
Identification, description and operation	4B– 7
Diagnosis and testing	4B– 8
Bearing noise	4B– 9
In-car adjustment and repairs	4B– 10
Rear wheel oil seal replacement	4B– 12
Drive pinion oil seal	4B– 12
Drive pinion seal replacement	4B– 14
Off-car repairs	4B– 15
Gear tooth contact patterns	4B– 16
Tooth contact pattern adjustment	4B– 17
Pinion spacer thick	4B– 17
Pinion spacer too thin	4B– 17
Gear too close to pinion	4B– 18
Gear too far from pinion	4B– 18
Differential case and drive pinion removal	4B– 18
Inspection after removal and disassembly	4B– 19
Gears	4B– 20
Bearing cups	4B– 20
Cone and roller assemblies	4B– 20
Drive pinion flange	4B– 20
Carrier casting	4B– 20
Differential case	4B– 20
Dismantling	4B– 21
Reassemble	4B– 22

Diff bearing pre-load torque setting 4B– 23
String and pull method 4B– 23
Break-away method 4B– 24
Rear pinion shim selection 4B– 26
Gauging of the carrier 4B– 26
Gauging the rear pinion bearing 4B– 27
Drive pinion assembly and installation: Model 75/80 ..... 4B– 28
Pinion bearing pre-load torque specification 4B– 29
Collapsible pinion pre-load spacer 4B– 30
Setting pinion bearing pre-load with collapsible spacer 4B– 31
Summary of rebuild operation 4B– 34

MODEL VARIATIONS AND PINION ASSEMBLIES

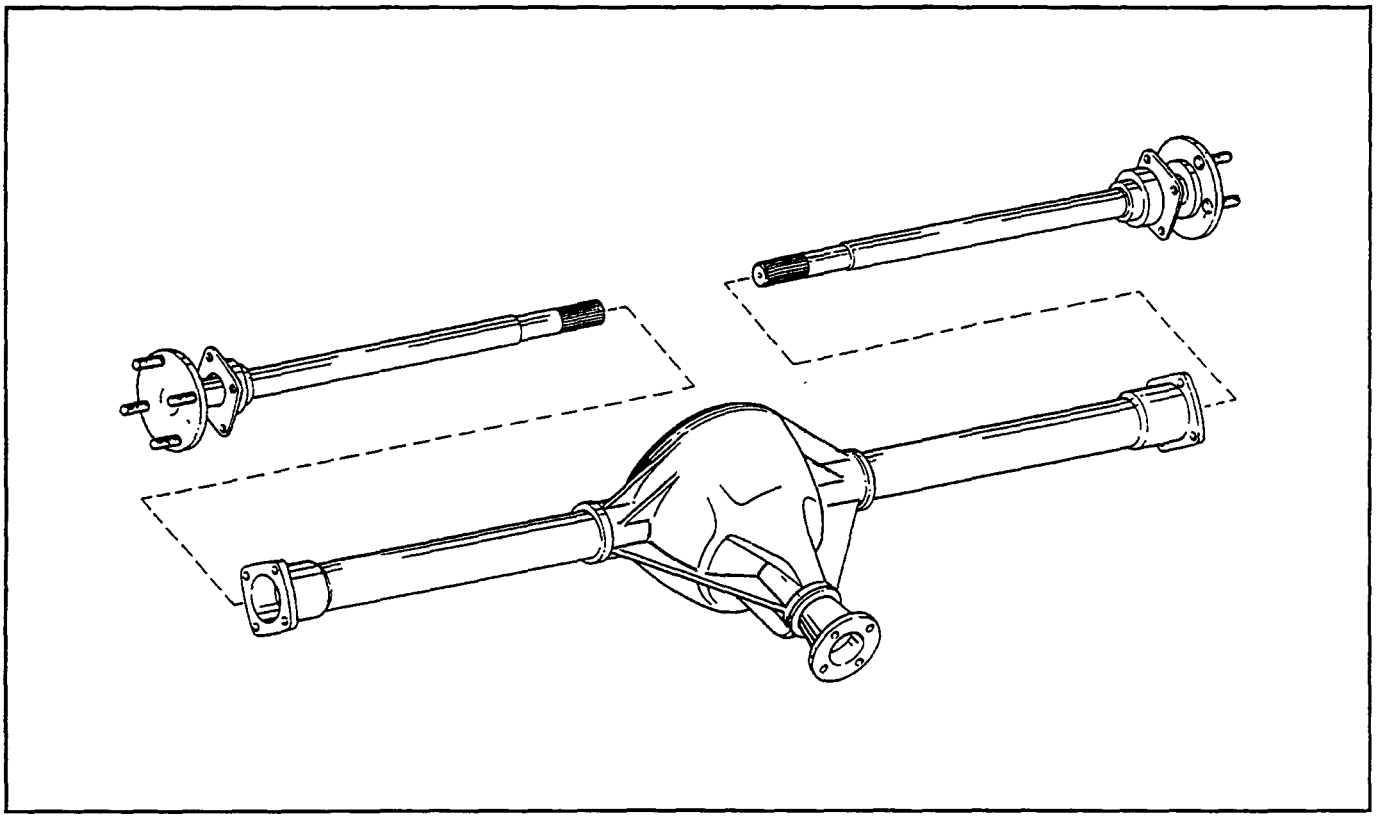

TYPICAL MODEL 80, 75 AXLES

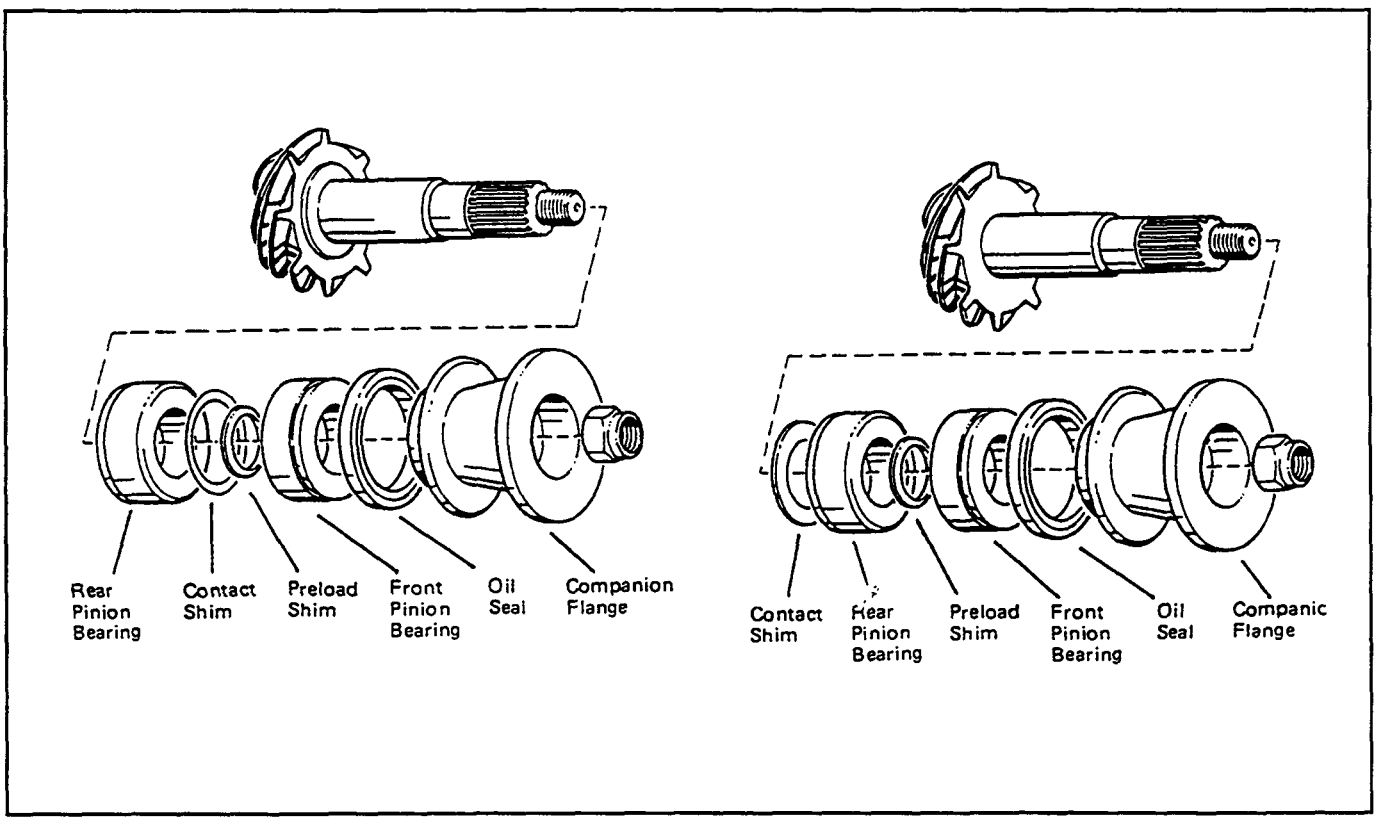

MAIN DATA AND SPECIFICATIONS

Ring gear and pinion	Model 80	Model 75 and 76
Backlash (tightest point)	0,13 to 0,21	0,13 to 0,21
Variation between teeth	0,08 mm all models	
Bearing pre-load	Model 80	Model 75 and 76
Differential	1,1 to 2,2 kg	1,1 to 2,2 kg
Pinion with seal	2,0 to 3,0 Nm	1,7 to 2,5 Nm
Pinion without seal	1,9 to 2,9 Nm	-

IMPORTANT:
THESE PRE-LOADS ARE APPLICABLE TO NEW BEARINGS ONLY WITHOUT OIL.
IF OILED REFER PAGE 22. WITH USED BEARINGS, DO NOT EXCEED 1,0 Nm ON PINION OR DIFF BEARINGS.

Lubrication	Model 80	Model 75	Model 76
*Oil fill	1,6 litres	1,4 litres	1,5 litres

***THESE FIGURES ARE APPROXIMATE FILL QUANTITIES ONLY.**

ALWAYS FILL TO THE LOWER EDGE OF THE FILLER PLUG HOLE WITH THE VEHICLE ON LEVEL GROUND.

Tightening torque	Model 80, 76	Model 75
Bearing cap bolts	60 - 70 Nm	47 - 61 Nm
Pinion nut*	245 - 345 Nm	*
Cover bolts	16 - 23 Nm	
Filler/Drain plug**	60 - 70 Nm	
	MODEL 80,76,75	
Ring gear bolts	115 - 125 Nm	

***FOR COLLAPSIBLE SPACER MODELS TIGHTEN TO PRE-LOAD TORQUE SPEC.**

****FOR DRAIN PLUGS APPLY LOC-TITE STUD LOCK.**

SPECIAL TOOLS

TOOL	TOOL No.	MODEL APPLICATION
Sliding hammer	5144-5007	All axles
Wheel bearing puller	5437-5005	All axles
	or standard tool	
Wheel bearing press dolly	5437-5007	35 mm bearing
Wheel bearing oil seal installer	5414-5004	35 mm ball bearing
Pinion oil seal installer	5397-5031	M75
	5144-5071	M80, M76
Stub shaft oil seal installer	5378-5071	Model 76
Bearing and flange puller	5376-5001	All models
	or standard tool	
Ring pinion bearing	5414-0124	All models
Puller (two piece)	5414-0158	
Diff bearing press dolly	5414-5018	M75, M76
	5144-5082	M80, M76
Rear pinion bearing	5144-5075	M80
Cone press only	5144-5080	M76
	5414-5005	M75
Pinion bearing cup installer	5144-5072	M80
	5144-5077	M76
	5375-5049	M75
Pinion bearing cup	5375-5092	M75
Extractor	5375-5050	M80
	5144-5078	M76
	5144-5083	M80
	5144-5079	M76
Alternate extractor (drift)	5605-5392	M80
Carrier holder/crusher	5437-0200	All axles
or Carrier spreader	5437-5017	All axles
Plus attachment plates	5375-5203	M80, M76, M75
Depth gauge cylinder	5151-5038	M75, M76, M80
Dummy pinion	5397-5386	M75, M76
	5144-5069	M80
Rear bearing setting gauge	5397-5146	M75, M76
	5144-5074	M80
Rear bearing setting master	5283-5064	M75, M76
	5144-5073	M80
Diff bearing assembly tools	5378-5038	M75, M76, M80

		FLANGE PART NO.	P.C.D.
Flange retaining spanner	5144-5002	06 75 031 027	77.8
		06 75 031 006	80.0
	5144-5070	06 75 031 028	89.98
		06 80 031 002	89.98
	5144-5012	06 75 031 006	80.0
	5144-5081	06 75 031 025	104.6
	5144-5076	06 76 031 002	75.0
Gear marking compound	06 00 410 001		
Gauge plate size:	500 mm x 200 mm x 10 mm		

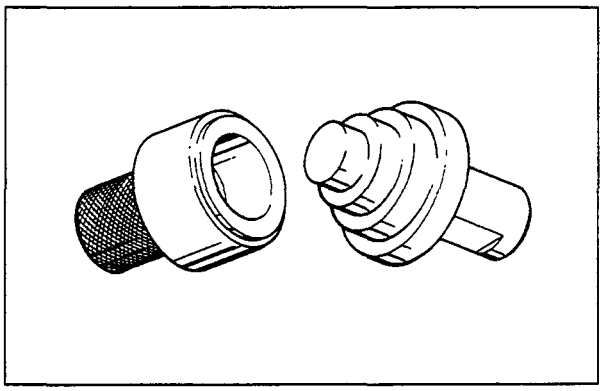

Wheel bearing oil seal installer
Pinion oil seal installer

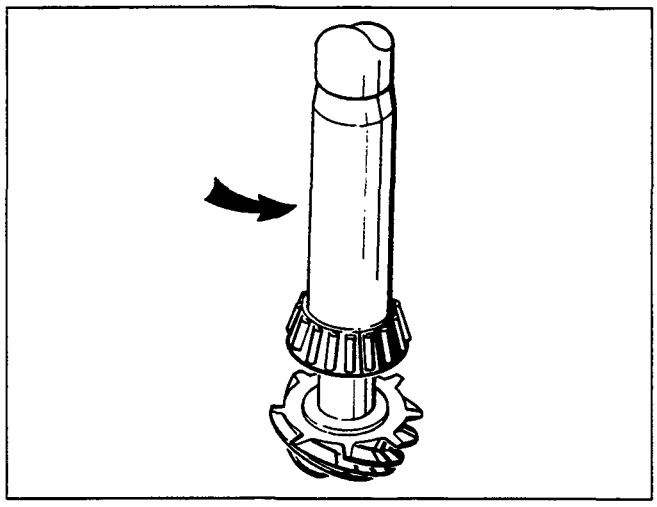

Rear pinion bearing

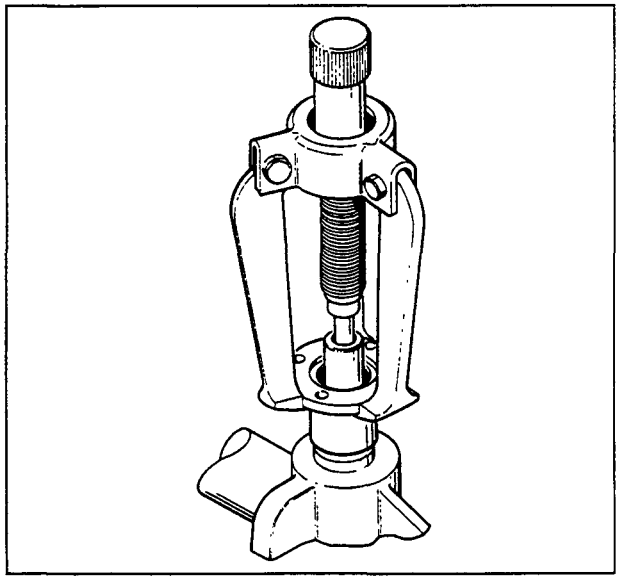

Bearing and flange puller

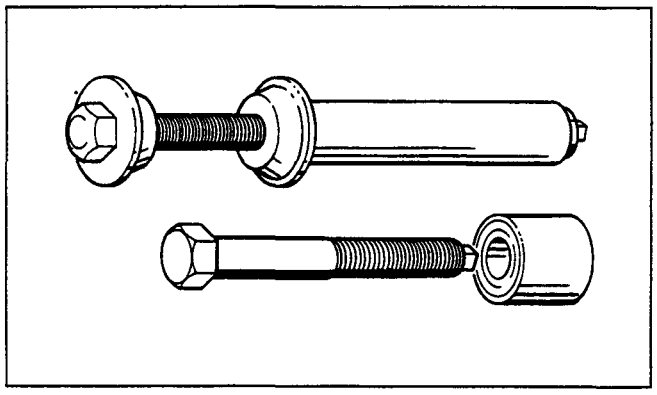

Pinion bearing cup installer

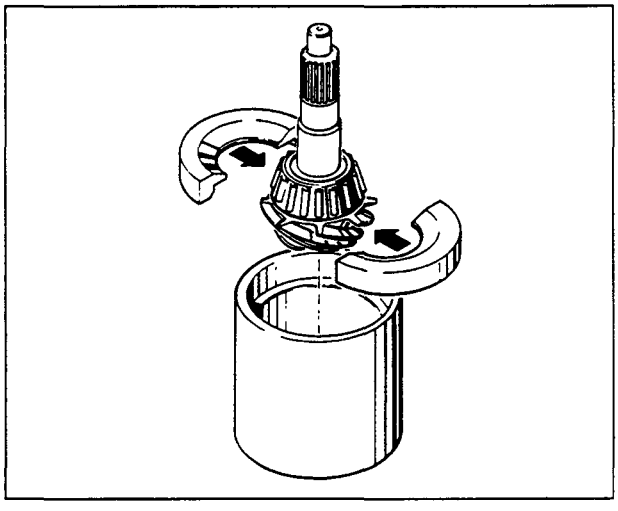

Ring pinion bearing

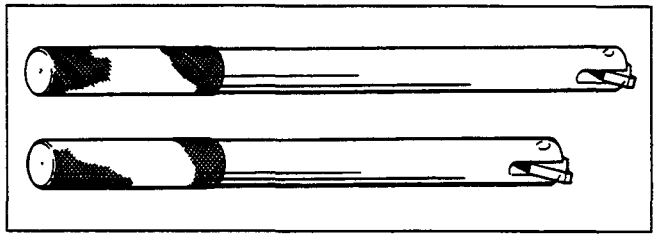

Pinion bearing cup

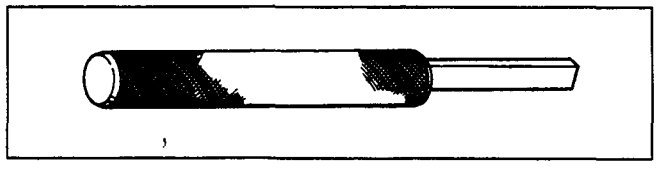

Alternate extractor

IDENTIFICATION, DESCRIPTION AND OPERATION

IDENTIFICATION

An identification tag with the axle assembly part number, axle serial number and axle ratio is fixed to the lower rib of the carrier casting.

DESCRIPTION

The rear axle is of the hypoid type using shim adjustment to obtain bearing pre-loads and gear adjustment. The differential case with ring-gear, and the drive pinion are mounted in opposed taper roller bearings in the one piece rear axle carrier.

The rear axle drive pinion receives its power from the engine through the transmission and drive shaft. The drive pinion rotates the differential case through engagement with the ring gear, which is bolted to the differential case flange. Inside the differential case are two differential pinions mounted on the differential pinion shaft which is pinned to the housing. These gears are engaged with the side gears, to which axle shafts are splined. Therefore, as the differential housing turns, it rotates the axle shafts and rear wheels. When it is necessary for one wheel and axle shaft to rotate faster than the other, the faster turning side gear causes the pinions to roll on the slower turning side gear to allow differential action between the two axle shafts.

For rigid axles of the semi-floating type, the axle shafts are held in the axle bearings and retainers at the housing outer ends. Axle shaft end play is pre-set and is not adjustable.

All operations other than removal of the axle shafts and the replacement of the wheel bearing, wheel oil seal or stub shaft oil seal should be carried out with the axle removed from the vehicle. It is possible on some vehicles to change the pinion oil seal as well, but in other cases space restriction make this undesirable.

CARE OF THE AXLE

The lubricant level should be checked every 10 000 km with the vehicle unladen and on level ground. The oil should be at the lower edge of the filler plug hole.

It is generally unnecessary to periodically drain the axle lubricant. The factory fill may remain in the axle for the life of the vehicle, except when repairs are made, or when recommended by the vehicle manufacturer.

It is important that the lubricant specified by the manufacturer is used. Should it be suspected that the axle has shipped water, the axle should be drained and refilled with the recommended lubricant.

DIAGNOSIS AND TESTING

DIAGNOSIS GUIDE

Certain rear axle and drive line trouble symptoms are also common to the engine, transmission, tyres and other parts of the car. For this reason, be sure that the cause of the trouble is in the rear axle before adjusting, repairing or replacing any of the axle parts.

REAR AXLE DIAGNOSIS

Noise in a rear axle is more difficult to diagnose and repair than mechanical failures. Slight axle noise heard only at a certain speed or under particular conditions must be considered normal. Axle noise tends to peak or be more pronounced at particular speeds and the noise is in no way a sign of trouble in the car. Where noise is present in an objectionable form (load and/or at all speeds) the first effort should be to isolate the noise. Isolation of the noise in any one unit requires care and experience and an attempt to eliminate a slight noise may baffle even the expert.

Axle noises fall into two basic categories, gear noise and/or bearing noise.

DEFINITION OF DRIVING MODES

During the testing of the axle, noise will occur in different driving modes.
When power is delivered from the engine to the wheels, this is termed "drive".
"Drive" mode is also experienced when climbing hills accelerating or maintaining constant speed on a level road.
"Coast" mode is encountered when the vehicle moves against engine compression as when slowing down or descending a hill.
In some cases noise is detected in a 'float' condition.
This is a rare condition and is difficult to maintain as it is between drive and coast and occurs momentarily.
The most important characteristic of gear noise is that it is usually sensitive to throttle position; e.g. noise audible under drive condition will often disappear under coast conditions at the same vehicle speed and vice-versa.
Axle gear whine will always occur at the same road speed and throttle setting i.e. drive or coast. Gear whine is usually a fairly high pitched pure tone as opposed is usually a fairly high pitched pure tone as opposed to a low pitched rumble caused by a spalled bearing.

Some noises which can be confused with axle gear whine are:-

- Whine from an engine component, this always occur at the same engine speed irrespective of which transmission gear is used.
- Whine from an indirect transmission gear (e.g. 5th gear on some vehicles produces a whine comparable when the direct transmission ratio is selected.
- Whine from tyres or wind noise from a roof rack or aerial. These noises generally occur over a very broad speed range and do not change with driving mode i.e. drive or coast.

REMEMBER: BEFORE DIAGNOSING THE WHINE AS AXLE GEAR NOISE, ENSURE THAT THE WHINE:

1. Occurs in direct transmission ratio (4th gear).
2. Changes with throttle variations (drive and coast).
3. Always occurs at the same road speed and not engine speed.
4. Occurs over a limited vehicle speed range. (This can vary and be over a wider band should the axle be in extremely poor condition).

BEARING NOISE

Bearing noise is inclined to be less throttle sensitive than gear noise and frequently occurs over a wider speed range, bad cases of faulty bearings can, in fact, be detected from walking speed, building up in pitch as speed increases and is not affected by changing from drive to coast and vice-versa.

1. Rear wheel bearing noise tends to be a low pitched grumble, which can normally be detected and confirmed when driving on a smooth road at constant speed, with the noise most audible while swerving sharply from the left to right. If the noise decreases or increases as the car is swerved, it is probable that a wheel bearing is faulty. A further check for wheel bearing noise can be carried out by driving close to a wall or a curb at a suitable speed.
   The noise of a faulty bearing will normally be reflected back and will clearly audible through the open window of the car.
2. Differential bearing noise is usually similar in pitch to wheel or bearing noise but not affected by the swerve check referred to previously.
3. Pinion bearing noise is normally at a higher pitch than wheel or differential bearings and is often slightly sensitive to throttle position, although not to the same extent as gear noise.

OTHER

A further condition which can exist is gear noise caused by a worn bearing which allows the gearset to move out of its correct mesh.

This condition is usually throttle sensitive, with the noise frequently disappearing on a "drive" condition.

Any amount of "float" or end play in either the pinion bearings or differential carrier bearings is detrimental to the gears and bearings and will cause axle noise.

A high spot sometimes occurs on either the ring gear or the drive pinion; this shows up as a ticking or light knocking noise over a restricted range of throttle positions. The frequency of the noise will indicate whether the high spot is on the pinion (drive shaft frequency) or on the ring gear. The severity of the noise indicates the size of the defect. A light 'tick' is seldom detrimental and usually occurs in a new axle only and will normally disappear once the axle has been run in.

Louder noises usually indicates a more serious defect and a knock occurring in an axle which was previously free from this type of noise must always be investigated.

IN-CAR ADJUSTMENTS AND REPAIRS

REAR AXLE SHAFT, WHEEL BEARING AND INNER BEARING RETAINERS AND WHEEL BEARING OIL SEALS

This section applies to ball and 'unit' (taper roller) bearings on rigid axles.

1. Remove the wheel and tyre from the brake drum.
2. Remove any screws that secure the brake drum to the axle flange and then remove the drum from the flange.
3. Working through the hole provided in the axle shaft flange, remove the four bolts that secure the outer wheel bearing retainer. Then pull the axle shaft assy out of the axle housing using an axle shaft removal hammer.
   The brake carrier plate must not be dislodged. Install one bolt to hold the plate in place after the axle shaft is removed.
4. If the rear wheel bearing or outboard seal fitted with unit taper bearing is to be replaced, loosen the inner retrainer. The retainer will become loose on the shaft, if it is chiselled deeply in several places.

CARE MUST BE TAKEN TO AVOID DAMAGE TO THE SHAFT SEAL SURFACE OR BEARING SEATING.

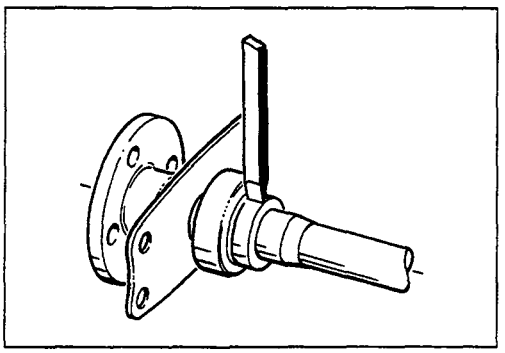

Figure 1

5. On M75 passenger car axles, a 35 mm I.D. X 72 mm outer diameter ball bearing and inboard oil seal is used. This seal is located in the tube flange and the bearing gas greased seals on both sides. To remove the bearing, chisel the inner retainer as described in 4 and press off the bearing. (Fig. 1).
6. All M75/M20/M80 commercial axles use a 'unit' taper roller bearing which incorporates an outboard oil seal, secured by the outer bearing retainer. These bearings do not have greased seals as they rely on lubrication from the axle lubricant in the axle tubes. If this type of bearing is removed, the oil seal should be replaced as well.
7. Chisel the retainer ring as shown in Fig. 1 and then press the bearing from the shaft in a suitable hydraulic press.

   Note: This bearing must be discarded.

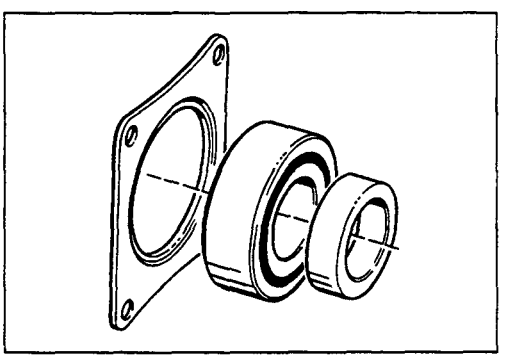

Figure 2

8. Inspect the machine surface of the axle shaft and the axle housing for rough spots or other irregularities which would affect the sealing action of the oil seal. Carefully remove any burrs or rough spots.
9. It is important that the outer retainer is not excessively deformed, as the retainer is used to restrict movement of the shaft's bearing and seal arrangement during operation.
10. Press a new rear wheel bearing onto the shaft until the bearing seats firmly against the shoulder on the shaft.

IMPORTANT: PRESSURE MUST BE APPLIED THROUGH THE INNER BEARING RING ONLY. NOTE ALSO THAT MOST BEARINGS MUST BE INSTALLED FACING IN A SPECIFIC DIRECTION, IN THE CASE OF 30 mm I.D. BALL BEARING, THIS IS WITH THE INNER RING EXTENSION TOWARDS THE SHAFT FLANGE. IN THE CASE OF THE UNIT TAPER BEARING, WITH THE MAIN CUP TOWARDS THE INNER (SPLINED) END OF THE SHAFT.

11. Press a new inner retainer onto the shaft until the retainer seats firmly against the bearing.
12. Slide the axle shaft into the housing.
13. Start the axle splines into the side gear and push the shaft in until the bearing bottoms in the housing.
14. Install the outer bearing retainer and the bolts that secure it, taking care to tighten the bolts evenly. Torque the bolts to the required specification.

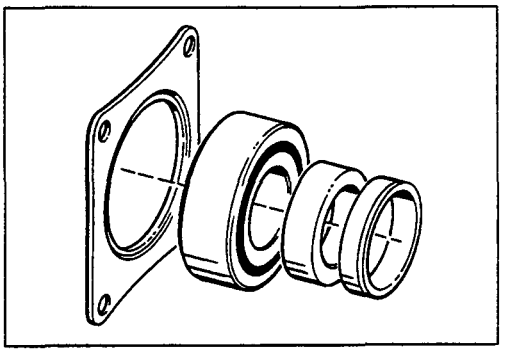

Figure 3

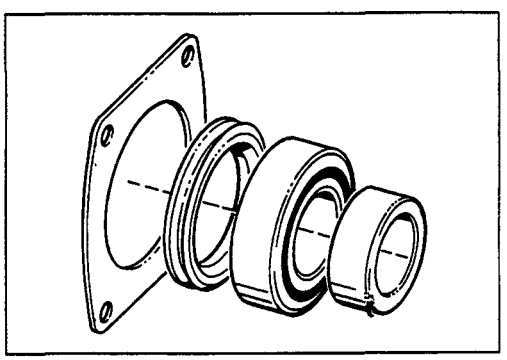

Figure 4

15. In some cases the taper roller bearing cup may separate from the cone whilst installing the shaft. These bearings may be re-used provided care is taken in locating the loose rib ring when assembling the outer retainer.

REAR WHEEL OIL SEAL REPLACEMENT

Two main seal configurations are used on Borg-Warner rear axles. They are as follows:-

Inboard oil seal

M75 Passenger axles having the 35 mm I.D. x 72 mm ball wheel bearing, use an inboard oil seal in the tube flange housing. (see Fig. 3).

To replace this oil seal:-

1. Lever out the old seal taking care not to damage the housing bore.
2. Clean and inspect the shaft journal for scratches, nicks etc.
3. Install the new oil seal with a garter spring inboard using the installation tool. This tool will correctly posi tion the oil seal relative to the bearing and flange face.

Outboard oil seal

This seal is fitted to the M75/M20/M80 commercial axles using the unit taper roller wheel bearings. (see Fig. 4).

1. Remove the bearing and inner retainer as described on page 4 item 4 and page 5 item 7 and discard these components.
2. Replace the oil seal with the garter spring inboard.
3. Install a new wheel bearing and inner retainer.

DRIVE PINION OIL SEAL

NOTE: RECENT AXLES FROM GEARMAX HAVE COLLAPSIBLE PINION SPACERS IN PLACE OF THE PREVIOUS SOLID PRE-LOAD SHIM.

It is important that the guidelines below are followed when servicing pinion seals with the axle in the vehicle. To identify the axles containing collapsible spacers, the following table display the axle model (M75) as well as the part number (the three digits preceding the serial number) from which model the collapsible spacer is introduced. All part numbers listed below and higher will use the collapsible spacer. In addition, the letters on the serial tag are printed in red when collapsible spacers are used, and black for current solid preload shim models.

AXLE MODEL AXLE TYPE	PART NUMBER FROM THIS NO. AND HIGHER
M68	FROM PREFIX 171 - COLLAPSIBLE
M70	FROM PREFIX 150 - COLLAPSIBLE
M71	FROM PREFIX 050 - COLLAPSIBLE
M75	FROM PREFIX 250 - COLLAPSIBLE
M76	FROM PREFIX 034 - COLLAPSIBLE

SERIAL No.
PREFIX → 85 BC 4006 AA
oM71 RATIO 4.11o
053 – 01001

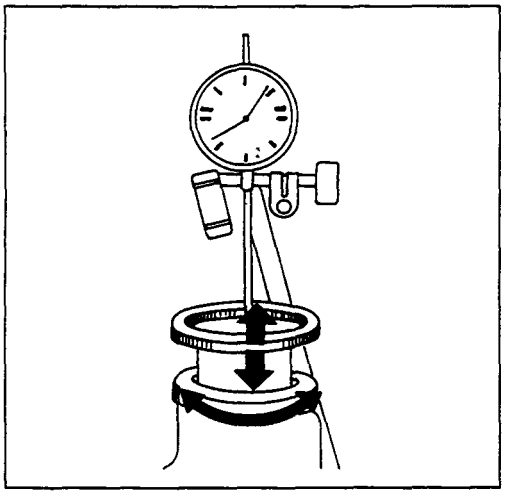

Figure 5

METHOD

1. Remove the drive shaft from the axle.
2. Check for pinion bearing END FLOAT as follows:
   (a) Mount a dial indicator on the axle and if necessary, secure it with a clamp.
   (b) Locate the stylus point on the end of the pinion.
   (c) While rotating the flange back and forth through approximate 45 degrees, lift the companion flange. Zero the dial indicator while maintaining the load on the pinion. Repeat the back and forth movement while pressing against the flange. (see Fig.5).
   (d) IF ANY END FLOAT EXISTS, the axle must be removed from the vehicle for further inspection.
3. Check the pinion nut ON TORQUE. (For this purpose an indicator type torque wrench is preferred rather than the clicker type).
   Should the nut torque be substantially lower than the specifications, (eg. below 150 Nm) the axle should be removed for further inspection.
   CARE MUST BE TAKEN WHEN CHECKING THE ON-TORQUE THAT THE NUT IS NOT TIGHTENED WHICH MAY CAUSE AN INCORRECT PRE-LOAD SETTING.
4. If items 2 and 3 are O.K., measure the PINION PRE-LOAD TORQUE for reference only, (axles with higher mileage will show lower readings and are difficult to measure accurately) mark the pinion end, pinion nut and companion flange also noting the number of threads that protrude through the pinion nut. This will make it possible for the pinion nut to be tightened to exactly the same position on re-assembly. (see Fig. 6).
5. Remove the pinion nut and companion flange as shown in Fig. 7. Remove the oil seal taking care not to damage the housing bore.

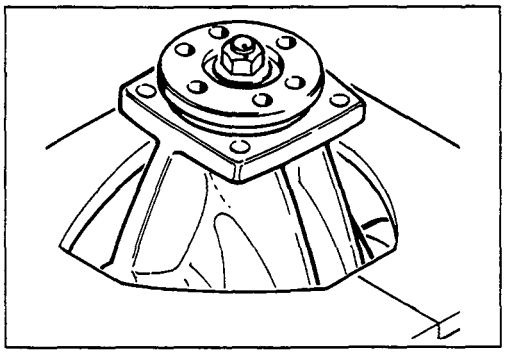

Figure 6

6. Inspect the companion flange for defects as described below.
7. If the companion flange is to be RE-USED, install a new oil seal using the relevant service tool. Align the marks on the companion flange and pinion end and install the flange. Should the flange require REPLACEMENT, the axle must be disassembled and the collapsible spacer and pinion bearing replaced.
8. Tighten the pinion nut carefully ensuring that the alignment marks on the pinion and nut are not tightened past the original position. Re-check the pinion pre-load torque. There should be no large differences to the resultant measurement compared to the reading taken in 4.

DRIVE PINION SEAL REPLACEMENT

1. Hold the companion flange with the flange retaining spanner and remove the pinion nut.
2. Remove the companion flange using the appropriate puller. (Fig.7).
3. Remove the pinion oil seal, taking care not to damage the housing bore.
4. Clean and inspect the companion flange.
5. Using the installation tool, install the new oil seal into the housing.

NOTE: TWO TYPES OF PINION OIL SEALS ARE USED:

(a) Metal case pinion oil seal. This seal should be flush with the carrier face.

(b) Standard rubber case seals should be fitted flush to 0,25 mm below the carrier face.

6. Install the companion flange.
7. Install the pinion nut while restraining the companion flange, tighten the pinion nut to the specified torque. (Fig. 8).

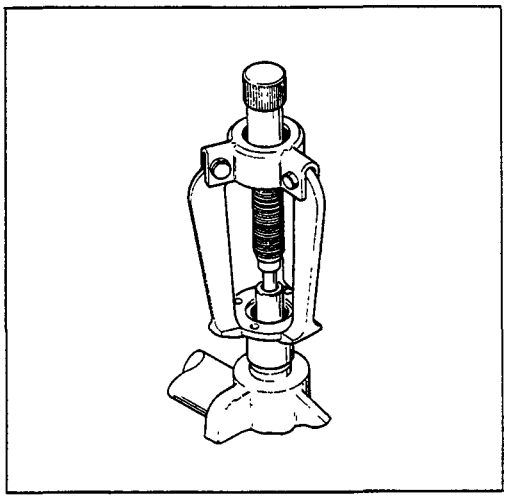

Figure 7

IMPORTANT:
ALL OIL SEAL REPLACEMENTS

The presence of scratches or burns in the carrier or tube flange bore can cause a leak around the O.D. of the seal. Scratches, nicks, bumps or burrs on the companion flange, or axle shaft ground journals usually result in seal failure.
Be sure to inspect these surfaces carefully for damage.
In case where slight damage exists:

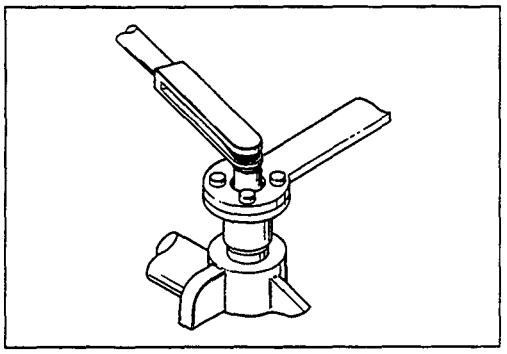

Figure 8

In the carrier bores:
Remove the worst damage with medium emery cloth and apply an oil resistant sealer or gasket compound.

For journal damage:
If the scratch is very light, use a 600 grit emery paper and polish the shaft in a circumferential direction only. Avoid any helical or axial marks while polishing as this will enable the oil to bypass the oil seal lip.
Should the damage be deeper, the shaft or flange must be replaced.
N.B. ENSURE DEBRIS FROM EMERY CLOTH/PAPER DOES NOT ENTER THE AXLE ASSEMBLY.

OFF-CAR REPAIRS

INSPECTION OF DIFFERENTIAL AND DRIVE PINION BEFORE DISASSEMBLY

The existing components should be inspected before they are removed from the housing. These inspections can help to find the cause of the trouble and determine the corrections needed.

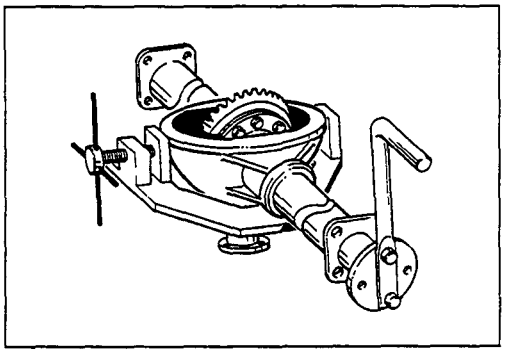

Figure 9

Remove the rear cover, wash the oil from the components using a suitable solvent, and visually check for obvious wear or damage to the ring gear and differential case. The gearset teeth should be as oil-free and dry as possible to obtain a good tooth contact pattern.
Rotate the gear to see if there is any roughness which would indicate defective bearings or damage gear teeth.
At this point, measure differential pre-load and ring gear backlash as preferred to on page 16. If a zero pre-load condition is noted, ascertain whether end float exists across the differential bearings. If play exists this would indicate worn bearings.

If no obvious defects are noted check the gear tooth contact pattern. Paint the gear teeth thinly with the specified marking compound. Wrap a cloth around the companion flange and grip firmly by hand to brake its rotation while driving the gear through one side shaft. (Fig. 5).
At the same time the opposite side shaft should be locked to prevent its rotation. In this way a torque is applied to the gears whilst being rotated.
Rotate the gears in both directions.
Certain types of gear tooth contact patterns on the ring gear indicating incorrect can often be corrected by re-adjusting the gears.

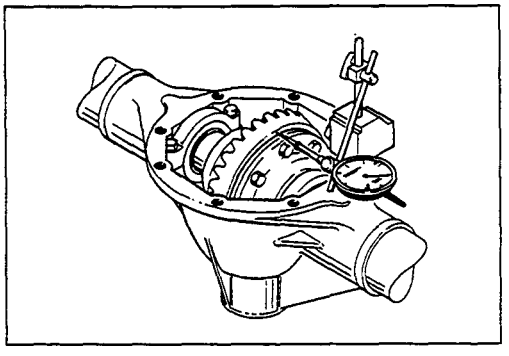

Figure 10

Typical patterns and the necessary corrections are explained within the following section.

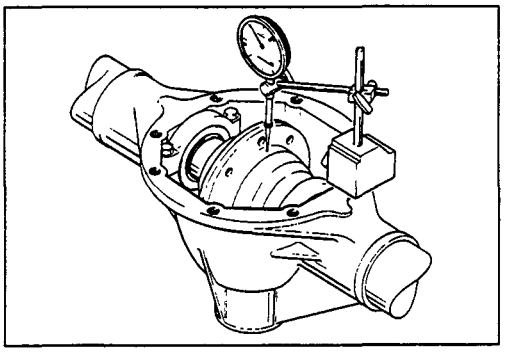

Figure 11

Gear tooth contact inspection

Gear toot runout can sometimes be detected by an erratic pattern on the teeth. However, a dial indicator should be used to measure the runout of the back face of the ring gear, (Fig. 10) with the maximum permissible amount being 0,08 T.I.R. (total indicator reading i.e. from one extreme of the indicator needle to the other).

NOTE: EXCESSIVE RUNOUT DOES NOT NECESSARY MEAN THAT THE GEAR IS AT FAULT.

This runout can be caused by:

(a) Dirt under the ring gear seat.

(b) Loose ring gear bolts

(c) Faulty differential case (i.e. distorted flange or journal)

If the differential case is suspect, remove the ring gear and using a dial indicator, as shown in (Fig. 11), measure the journal runout. This may not exceed 0,05 mm T.I.R. Before discarding such a differential case, check the flange for dirt, burrs or high spots.

GEAR TOOTH CONTACT PATTERNS

PATTERN CHECK

In general, ideal tooth contact patterns should have the following characteristics:-

1. The drive pattern should be fairly well centred on the tooth with a slight displacement towards the toe.
2. The coast pattern should be centred and the tooth.
3. Some clearance between the pattern and the edges of the tooth is essential.
4. There must be no hard lines where the pressure is high.
5. The length of the patterns should be at least 50% of the tooth width.

Individual gear sets do not necessarily conform exactly to the ideal pattern and individual gear sets of the same type will show patterns that are acceptable yet different from the desired ideal.

The patterns shown below are typical of gear sets that have either an incorrect backlash, or an incorrect shim adjustment. Since each gear set rolls a characteristic pattern, these patterns should be considered as typical only and thus should be a guide rather than a rigid standard.

The drive pattern is rolled on the convex side of the tooth and the coast pattern is rolled on the concave side.

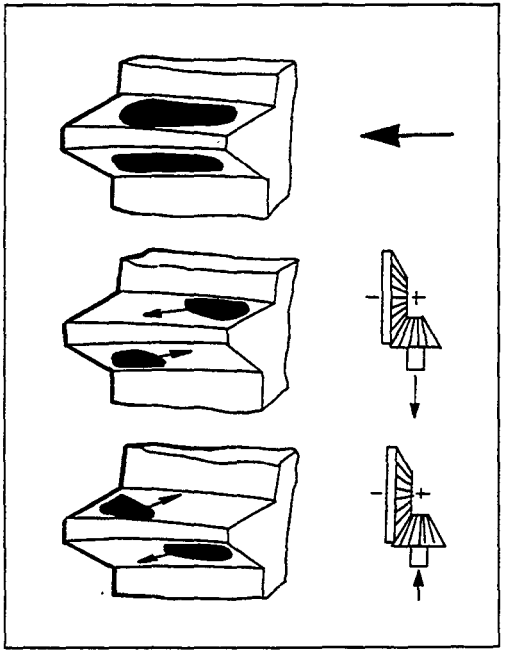

CROWN WHEEL TOOTH PATTERN

TOOTH CONTACT PATTERN ADJUSTMENT

CORRECT ADJUSTMENT

PINION SPACER TOO THICK

Use Thinner Pinion adjustment shim. DRIVE Pattern moves toward the top of tooth and toward the heel.
COAST Pattern moves toward toe.

PINION SPACER TOO THIN

Use Thicker Pinion adjustment shim. DRIVE Pattern moves lower on the tooth and toward the toe. COAST Pattern moves lower on the tooth and slightly toward the heel.

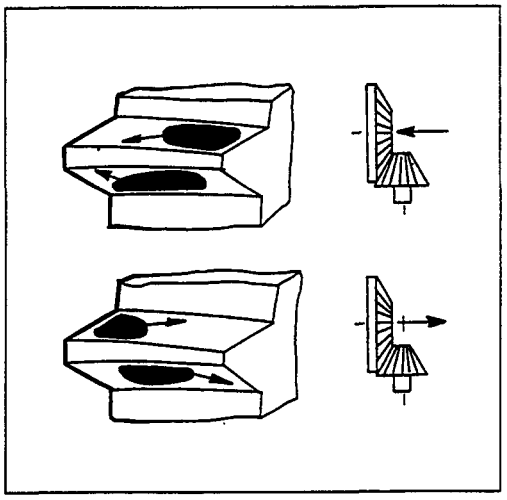

GEAR TOO CLOSE TO PINION
Move Gear away from pinion to increase backlash. Drive Pattern moves slightly higher and toward the heel.
COAST Pattern moves slightly higher and toward the heel.

GEAR TOO FAR FROM PINION
Move Gear closer to pinion to decrease backlash. DRIVE Pattern moves slightly lower and toward the toe.
COAST Pattern moves lower and toward the toe.

As pinion adjustment shim changes will affect backlash slightly, move gear closer to pinion after using thinner shim and move gear away from pinion after using thicker shim **if necessary.**

Pinion adjustment is made after examining tooth pattern on correct backlash setting and with the pinion set at correct pre-load.

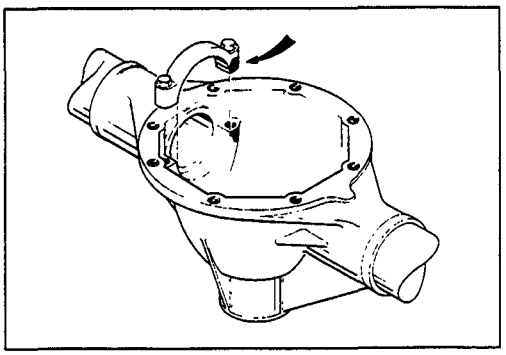

Figure 12

DIFFERENTIAL CASE AND DRIVE PINION REMOVAL

1. Remove the differential bearing cap bolts and bearing caps; note that the bearing caps are not interchangeable and that they must be marked to ensure that they are returned to their original positions. (A paint flash on the L.H. cap and adjacent carrier is applied by the factory). (Fig. 12).

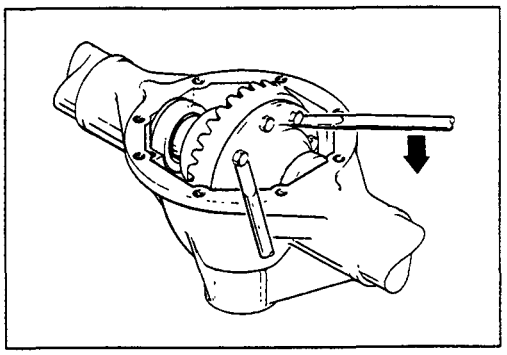

2. If a table top bench spreader is not available, install the carrier spreader plates and the spreader tool. Spread the carrier to release any clamp on the differential bearings **(N.B. MAXIMUM SPREAD 0,5 mm).**

   Use two tyre levels and remove the differential case from the carrier. Ensure that the differential bearing shims are correctly positioned alongside the appropriate bearing caps and are not mixed. (Fig. 13).

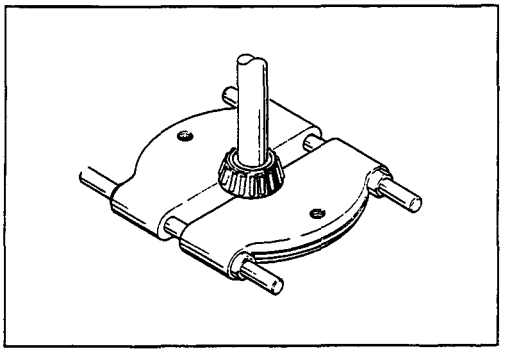

Figure 14

3. If the differential bearing are to be replaced use the extractor shown in Fig. 14 to remove the old bearing and install the new bearing using a press and the installation tool.
4. Remove the bolts that attach the ring gear to the differential case. Press the ring gear from the case or tap it off with a soft face mallet.
5. Remove the companion flange.
6. Press the pinion out of the front bearing cone and remove it through the rear of the carrier casting; a piece of soft metal or plastic should be used to protect the pinion threads. Do not hammer the pinion thread end.
7. Lever out the pinion oil seal and lift the front pinion bearing cone out of the carrier.
8. If the pinion bearing cups are to be replaced, drive them out of the carrier casting with a drift, taking care to tap alternately on opposite sides of the cap.

NOTE: INSPECT THE HOUSING CUP SEATS AND REMOVE ANY BURRS WHICH MAY HAVE RESULTED FROM CUP REMOVAL.

Install the new cups with the tools as shown in Fig. 50. Ensure that the cups are properly seated in their bores. If a 0,04 mm feeler gauge can be inserted between a cup and the bottom of its bore at any point around the cup, the cup is not properly seated.

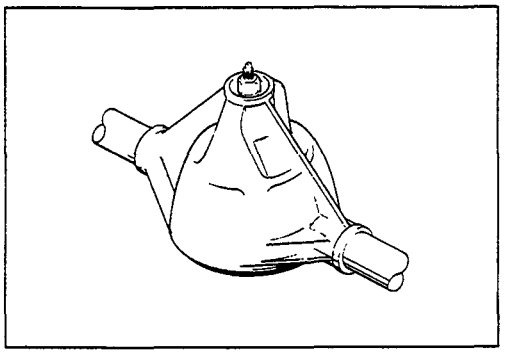

Figure 15

9. Remove the pinion rear bearing cone using the type of extractor shown in Fig. 16.

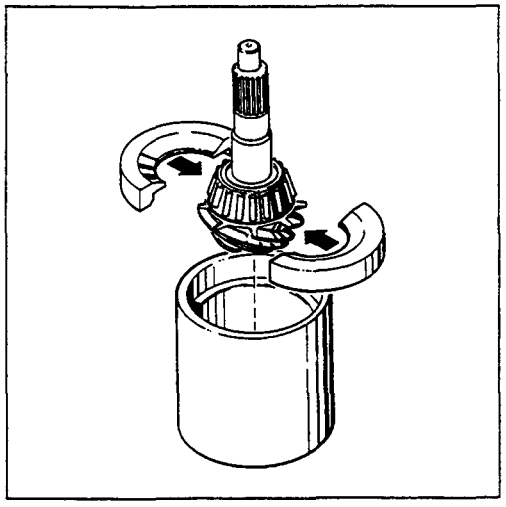

Figure 16

INSPECTION AFTER REMOVAL AND DISASSEMBLY

Thoroughly clean all parts. Always use new solvent when cleaning bearings. If these bearings are to be re-used, oil them immediately to prevent rusting. Inspect the parts for nay major defect.

Clean the inside of the housing, paying special attention to the pinion oil gallery for cleanliness and freedom from restriction.

Inspect individual parts as outlined on page 20.

GEARS

Hypoid ring gear and pinion

The pattern taken during disassembly should help in judging if the gears can be reset by means of a shim or backlash correction. This should first be attempted before a gearset is discarded. Badly worn gears cannot be rebuilt to correct a noisy condition, although slightly worn gears can frequently be re-used with tolerable results.

Any gear scoring or scuffing caused by excessive shock loading or the use of an incorrect lubricant will render the gearset useless for further operation.

Differential gears (Spider gears)

Examine the teeth and thrust surfaces of the differential gears. Wear on the hub of the differential gear or in the differential case can cause a noise known as "chuckle" when the car is driven at low speeds. Wear of the splines, thrust surfaces, or thrust washers can contribute to excessive drive line backlash. Differential gears do not however cause axle whine.

BEARING CUPS

Check bearing cups for nicks, spalling or uneven wear patterns. Pinion bearing cups must be solidly seated.

CONE AND ROLLER ASSEMBLIES

When operated in the cups, bearing rollers and cones must turn without roughness. Examine the roller ends for wear. Step-wear on the roller ends indicates excessive wear. Replace the bearing.

DRIVE PINION FLANGE (Companion flange)

Be sure that the flange has not been damaged in the removing of the prop shaft or in removing the flange from the pinion. The end of the flange that contacts the bearing cone must be smooth. Replace if necessary.

CARRIER CASTING

Ensure that the bearing bores are smooth and the bearing abutment faces are not damaged. Remove burrs if necessary. Check the oil gallery for cleanliness.

DIFFERENTIAL CASE

Carefully examine the case hubs, which may have been damaged when the bearing were removed. The bearing assemblies will fall if they do not seat firmly on the hubs.

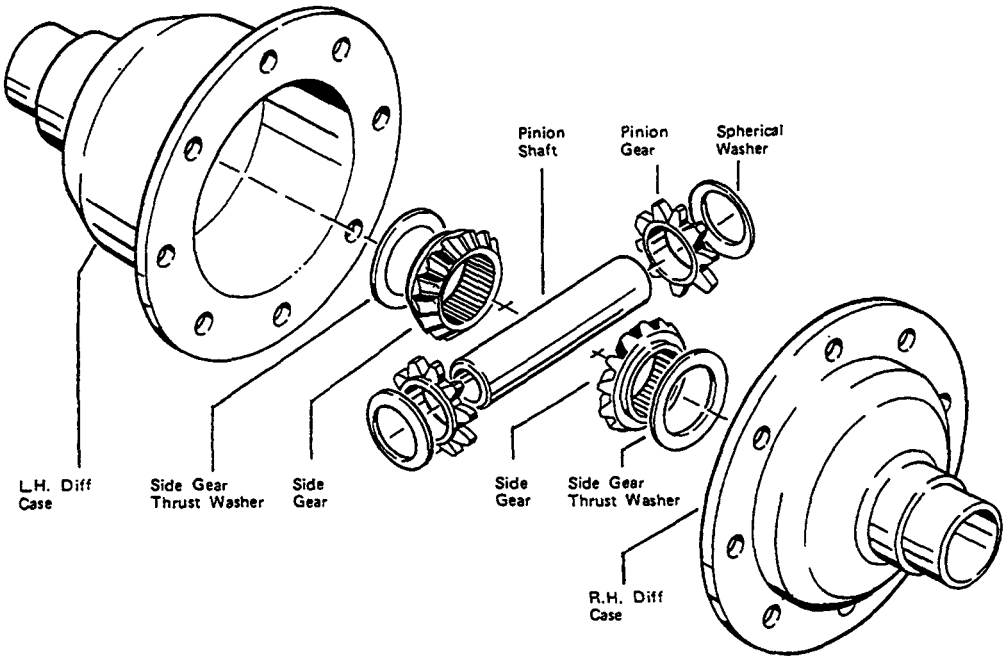

DISMANTLING

1. Unscrew the ring gear bolts and either press the ring gear off or use a soft mallet and tap if free from the case.
2. Drive out the differential pinion shaft retaining pin (spring pin).
3. Drive out the differential pinion shaft (cross-shaft).
4. Insert a hard wood dowel, or a suitable soft metal drift, approximately 10 mm diameter by 300 mm long through the RH (long) side of the case resting on the differential side gear in the LH (shorter) side.
   Light hammer blows on alternate sides of the differential side gear will separate the case.
5. With the case separated, the differential side and pinion gears together with their respective thrust washers may be removed by hand.
6. Check all parts for excessive wear, particularly the fit of the side gears in the differential case.
   Check the side gear and pinion teeth for cracks and ensure that the thrust washers are in good condition.

REASSEMBLE

1. Lubricate all gears and thrust washers with gear oil.
2. Replace the differential side gear together with its washer in the RH side of the differential case.
3. Enter the undrilled end of the differential pinion shaft into the side of the differential case having the drilled hole for the differential shaft retaining pin.
4. Enter the shaft approximately 2 mm into the differential case, with the drilled hole correctly aligned (see Fig. 9 on page 7). Locate a pinion thrust shim and pinion gear on the shaft and hold it in position while tapping the shaft deeper into the case. Leave just enough of a gap to place the second pinion gear and washer in position. Care must be taken that as the pinion shaft is driven into position that the spherical washer is not damaged.
5. Ensure that the pinion shaft hole lines up with the drilled hole in the case and install the retaining pin.
6. Place the outer side gear and thrust washer in the LH (short) side of the case and engaged the two halves of the case using the retaining pin as a guide.
7. Tap the two halves together using a soft mallet.
8. Ensure that the differential case flanges are in good condition and enter two ring gear bolts in opposite holes on the assembled differential case and start threads into the ring gear. Enter the remaining ring gear bolts and tighten evenly.

   Use a tightening sequence of "tighten one, miss two" and bring the ring gear bolts to the specified torque.

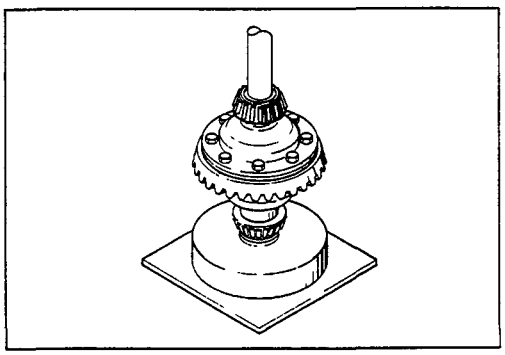

Figure 18

NOTE:
ANY BURRS OR DIRT ON THE MATING FLANGE FACES OR THE FLANGE FACE WHICH MATES WITH THE RING, CAN CAUSE RUN-OUT OR DISTORTION. FILE OFF BURRS AND CLEAN CAREFULLY BEFORE ASSEMBLY.

Insert R/H differential bearing cone on the appropriate press dolly and position the diff case under the press. Place the L/H bearing on the differential case hub and install the second press dolly and press the bearing home (Fig. 18).

NOTE:
CARE MUST BE TAKEN TO ENSURE THAT THE BEARING CONES ARE NOT SKEWED DURING THIS OPERATION, ENSURE THAT A 0,05 mm FEELER GAUGE WILL NOT ENTER BEHIND THE CONE AND THE DIFFERENTIAL BEARING SEAT.

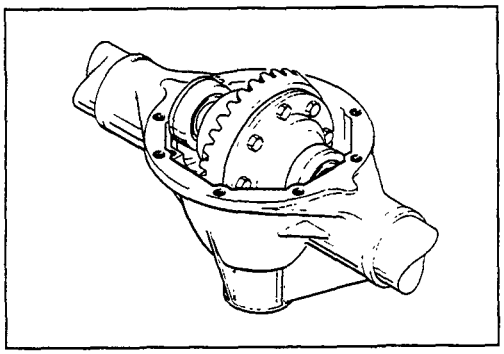

Figure 19

DIFF BEARING PRE-LOAD TORQUE SETTING

METHOD

Select any two differential bearing pre-load shims and place in against each of the differential bearing cups. Place the cups on the bearing cones and install the differential assembly in the carrier.

NOTE: THE SHIMS AND DIFFERENTIAL CUPS SHOULD ENTER THE CARRIER PARALLEL TO THE GEAR AS ANY SKEWING OF THE CUPS AND SHIMS MAY LEAD TO BRINELLING OF THE BEARINGS. (Fig. 19).

With the carrier spread, minimum effort is required to install the differential assembly into the carrier. If an overtight condition is noted, reduce the shims to facilitate easier assembly.

UNDER NO CIRCUMSTANCES SHOULD THE CARRIER BE SPREAD MORE THAN 0,5 mm.

Do not hammer on the ring gear. (Fig. 20).

Release the spreader tool and note that the bearing cups are correctly positioned as they are not interchangeable.

*Rotate the differential at least six times to seat the bearing rollers.

Measure diff bearing pre-load torque.

This can be measured in two ways:-

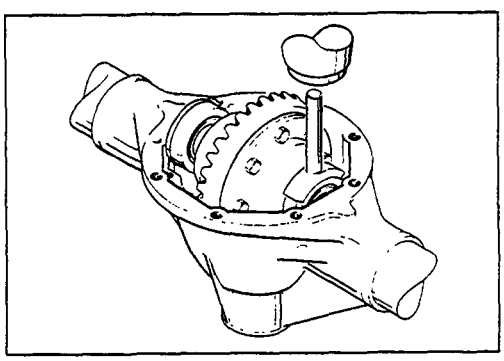

Figure 20

String and pull method

If the build procedure has been followed to this point, this method is suitable as the pinion has not been assembled, thus a 'rolling' torque can be measured.

1. Wrap a length of string around the differential case adjacent to the gear back and tie the loose end to a spring scale.
2. Pull the string with the scale so as to rotate the gear IN THE SAME DIRECTION as in * above, slowly and steadily. (Fig. 21).
3. Read the spring scale reading while the gear is rotating steadily.
4. Measure the diameter of the diff case around which the string was wrapped = D (mm).
   Calculate the pre-load torque as follows:-
   Pre-load Torque (Nm) =

$$\frac{\text{Spring Scale Reading (kg)} \times \text{Dia. D (mm)}}{200}$$

5. Once the pre-load torque is correct, record the LH and RH shim thicknesses. **The total of these two must remain the same** even though the LH and RH shims may have to change individually to set the backlash.

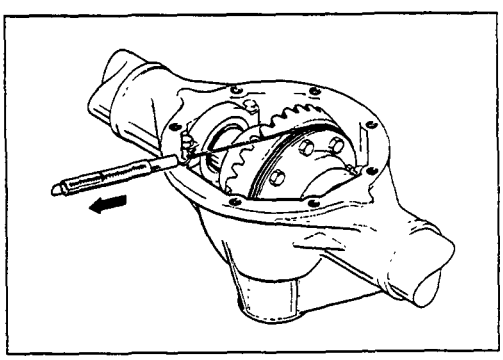

Figure 21

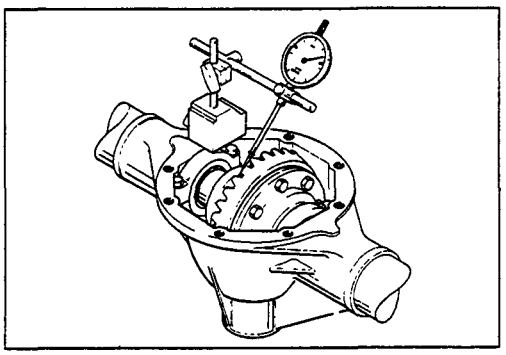

Figure 22

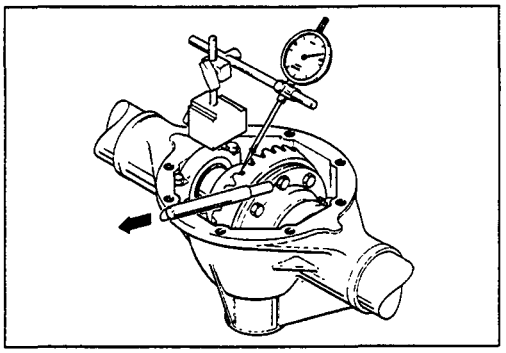

Figure 23

Break-away method

This method is used when the pinion is assembled in the carrier and must be executed as follows:-

1. With the pinion, differential, shims and bearing cups assembled into the carrier, rotate the pinion in one direction so that the gear makes at least three complete revolutions to settle the bearings. Do not rotate the pinion or gear in the opposite directions at any stage during this procedure.
2. Mount a dial indicator as if to measure ring gear backlash (i.e. probe on gear tooth), but do not measure backlash stage as this will 'unsettle' the bearings by turning them in the opposite direction. (Fig. 22).
3. Attach a spring scale to one of the ring gear bolts and gently pull on the scale so as to rotate the ring gear **in the same direction** as that in which the bearings were settled in item 1. The spring scale must also pull in a tangential direction. (Fig. 23).
4. Whilst pulling the spring scale, observe the dial indicator needle. When the needle moves, it is indicating that the gear has started to rotate. When that happens, read the spring scale reading without pulling harder or softer on the scale.

NOTE: OBSERVE THE SPRING SCALE READING AT THAT MOMENT WHEN THE GEAR MOVES THROUGH THE BACKLASH RANGE.

5. If you need to repeat the measurement, **do not** push the gear in the opposite direction, rather move the dial indicator probe out of the way, rotate the pinion as before in item 1, and then repeat the measurement as in item 2 to 4.

Diff preload torque specification:

	M75 M76 LM501349/10 Brgs.	M80
1. String pull method 2. Breakaway method Backlash spec	0,8 to 1,5 Nm 1,0 to 2,0 kg 0,12 to 0,18 mm	1,5 to 2,0 Nm 2,0 to 3,0 kg 0,10 to 0,18 mm

As the diff bearing shim selection is a trail and error process, the following will be of assistance in determining the correct backlash and pre-load for the bearings:-

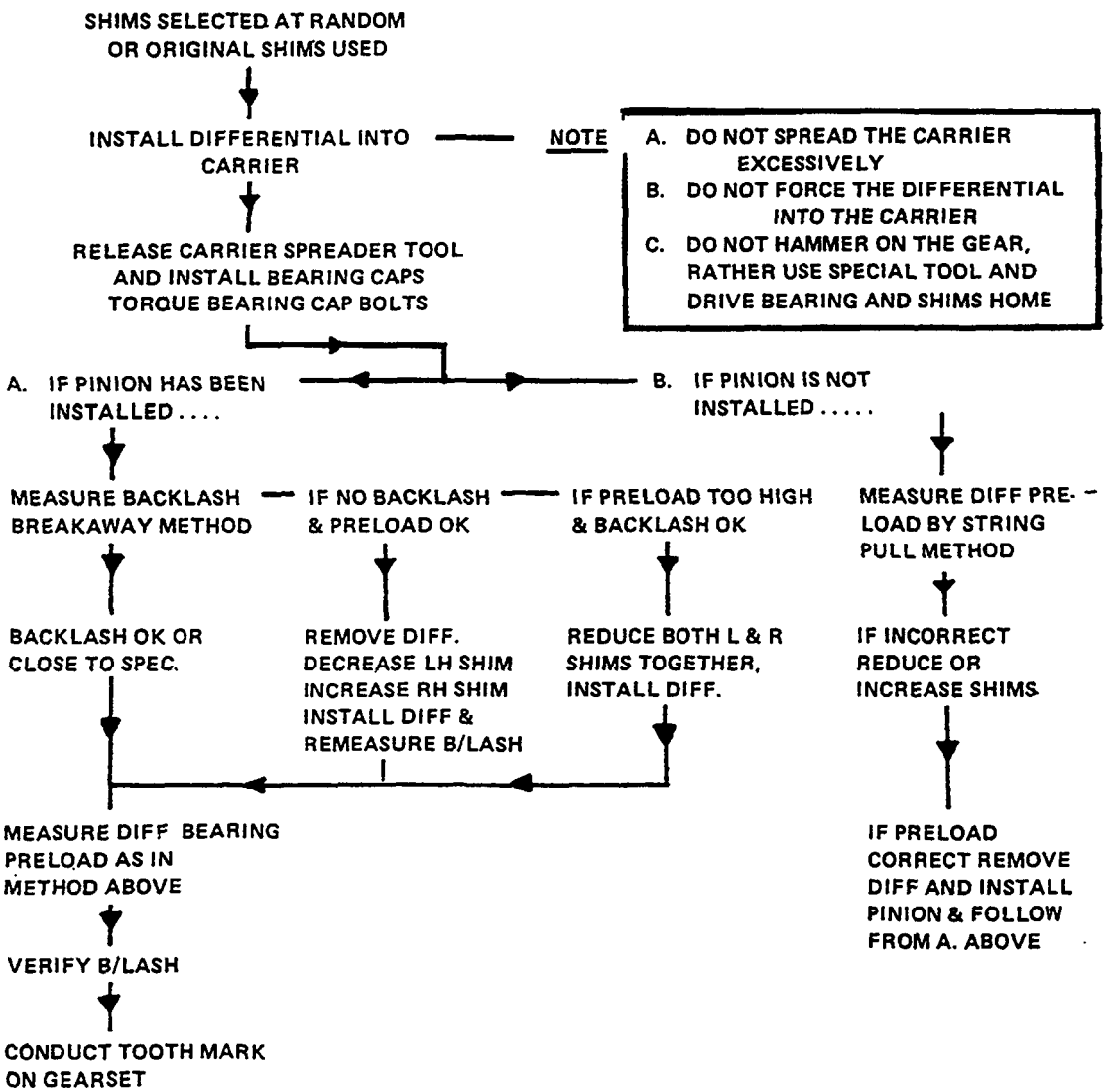

IRRESPECTIVE OF WHICH METHOD IS USED, IT IS VITALLY IMPORTANT THAT DIFF BEARING PRELOAD AND BACKLASH ARE TO SPECIFICATION ON COMPLETION OF ASSEMBLY. THIS WILL ENSURE OPTIMUM PERFORMANCE OF THE AXLE COMPONENTS. MEASUREMENTS SHOULD ALWAYS BE CONDUCTED WITH BEARING CAPS INSTALLED.

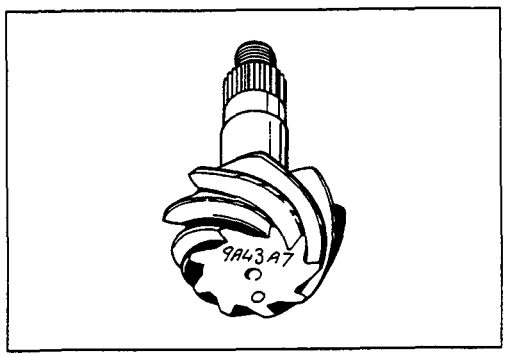

Figure 24

REAR PINION SHIM SELECTION

The operating positions of the gears require the use of an adjusting shim between either the pinion rear bearing cup and its seating surface in the carrier, or the rear bearing cone and the pinion head. When the shim thickness is decreased, the pinion is moved away from the drive gear. When the shim thickness is increased, the pinion is moved closer to the drive gear. This section describes the method of initial contact shim selection, but re-selection based on tooth contact pattern may be subsequently required.
Typical drive pinion and ring gear markings are shown in (Fig. 24).
The number 9AA43A7 is the matched set number that appears on both the drive pinion and the ring gear. When a new gearset is being installed in an axle, be sure that the same number appears on both the pinion and the ring gear.
A positive number on the drive pinion always indicates that a shim thinner than the normal shim for the particular model should be used to move the pinion away from the ring gear.
A negative number means that a thicker shim should be used to move the pinion closer to the gear. This is known as the "Pinion Deviation".
Gearset deviations from nominal mounting distances are marked in thousandths of an inch - e.g. (+ 3 means + 0.003") and must be converted in accordance with the following table in which the figures are rounded to the nearest 0,005 mm.

Example:

-1 = -0,025 mm + 1 = + 0,025 mm
-2 = -0,050 mm + 2 = + 0,050 mm
-3 = -0,075 mm + 3 = + 0,075 mm

The method of selecting the correct pinion shim starts with the nominal shim thickness (see pages 21) and makes adjustments according to the variations between actual and nominal dimensions of the components concerned. The dial gauge indicators are marked in 0,01 mm units, for the purposes of calculation; the 0,005 mm readings should be estimated as minor inaccuracies and will have little effect on the end result.

GAUGING OF THE CARRIER

1. Roll the depth gauge cylinder on a flat surface and adjust the dial to zero at its highest point. (Fig. 25).
   A work bench is not an accurate flat surface, therefore at least a piece of ground gauge plate should be used.
2. Ensure that the rear pinion bore in the carrier is clean and free from all burrs, particularly around the knockout slots.
3. Place the dummy pinion in the rear pinion bearing bore, ensuring that it rests properly against the abutment face without any rocking and that it is not wedged against the sides of the bore.

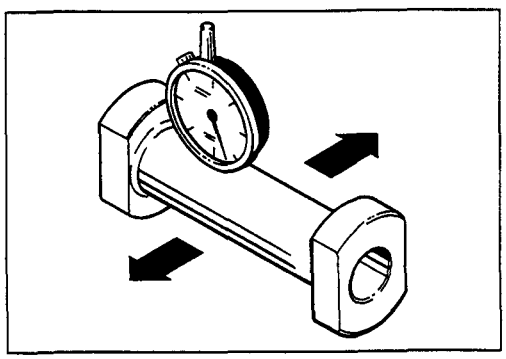

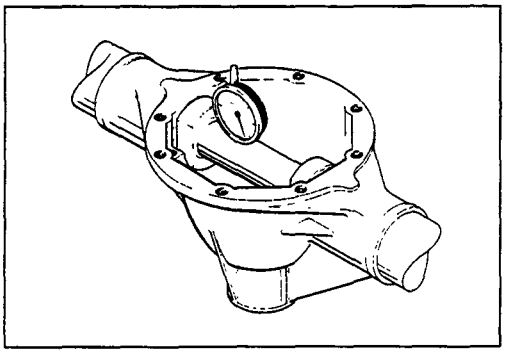

Figure 26

4. Place the depth gauge cylinder in the differential bearing bores and rock it backwards and forwards, noting the highest reading on the dial gauge. (Fig. 26).
   This is the 'carrier deviation'. A plus reading (+) indicates that the bearing seat is closer than nominal to the differential and the pinion shim thickness must be reduced accordingly, and vice-versa.

GAUGING THE REAR PINION BEARING

1. Clean both sides of the setting master ring and place it on a flat surface.
2. Clean the annular face of the bearing gauge and position it in the setting ring. Rotate the gauge to and fro to ensure that it is seated correctly and zero the gauge dial.
3. Ensure that the bearing is free from dirt, heavy oil or thick grease. **DO NOT REMOVE** the protective lubricant on new Timken bearings as this is used to set pre-load torque values on the bearings. If the bearing has been used or is contaminated, wash the bearing in a suitable cleaning solvent, and oil the bearing with a suitable hypoid oil and allow to drain.
4. Place the bearing on a flat surface with the back of the cone down and the cup on top.
5. Place the bearing gauge in the bearing with the ring of the gauge against the back face of the cup.
6. Rotate the gauge a few revolutions, **in one direction only,** while applying medium to heavy hand pressure in order to seat the rollers correctly and to drive out surplus lubricant from between the bearing surfaces. Record the dial gauge reading. This reading is known as the 'bearing deviation'. (Fig. 27).

CAUTION: SINCE THE GAUGES WORK IN OPPOSITE SENSES, DO NOT CONFUSE THE RULES FOR SHIM ADJUSTMENT FOR CARRIER VARIATIONS WITH THOSE FOR BEARING VARIATIONS.

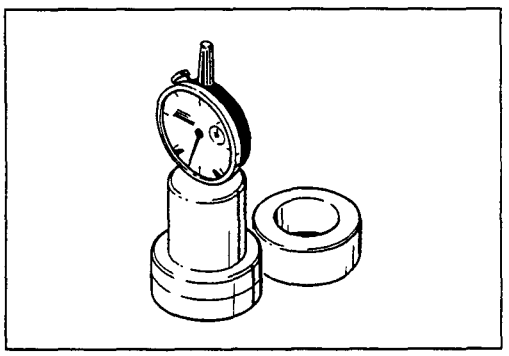

Figure 27

NOMINAL REAR PINION SHIM TICKNESSES AND POSITIONS:

As the shim position can vary in different models, the following table will assist in quick reference.

AXLE MODEL	RING GEAR OUTER	RATIOS	SHIM POSITION	NOMINAL THICKNESS
M75	191 mm and 197 mm	2,92 3,23 3,50* 3,70 3,89 4,00* 5,14*	On Pinion under Cone or against Carrier behind Cup*	2,299 mm or 0,483 mm
M80	203 mm	4,875 5,14*	Against Carrier Behind rear Pinion Bearing Cup	0,483 mm

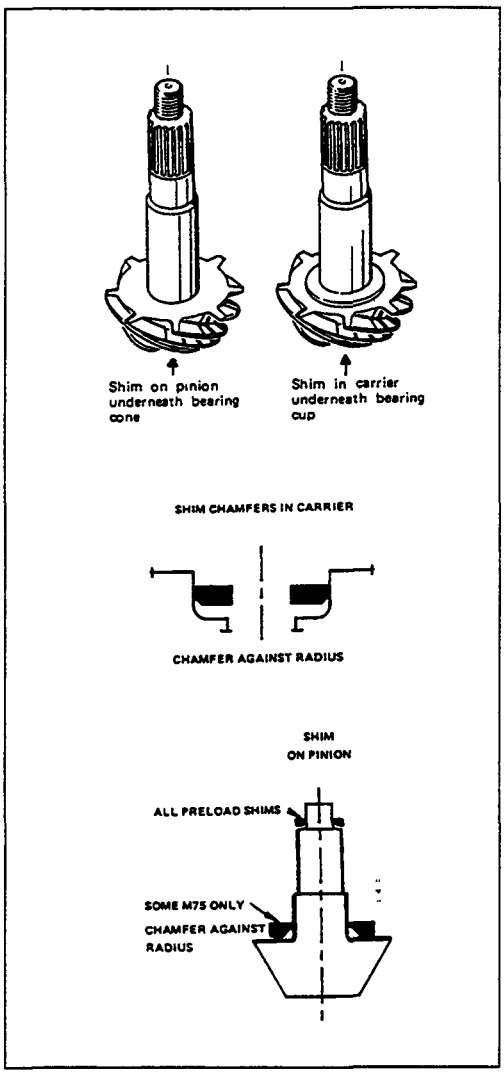

Figure 28

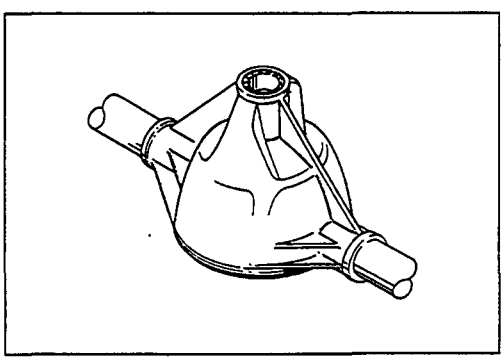

Care should be taken during disassembly to note whether the pinion has a raised bearing seat (shim seats behind bearing cup) or no seat (shim to be installed behind pinion head between bearing cone). (Fig. 28).

To calculate the thickness, refer to both the carrier and bearing deviation as shown in the example below:

M75 axle		**mm**
Carrier deviation		-0,125
Bearing deviation		-0,050
Pinion deviation		0
Nominal shim thickness		2,30
Carrier deviation -0,125	i.e. **less** material therefore add	0,125
Bearing deviation -0,050	i.e. **more** material therefore reduce	-0,050
Pinion deviation is 0	there shim thickness required	2,325

DRIVE PINION ASSEMBLY AND INSTALLATION: MODEL 75/80

1. Install the selected shim with pinion rear and front bearing cups in the carrier using the bearing cups in the carrier using the bearing cup installing tool.
   The contact shim is a thin shim of a nominal size of 0,48 mm and is installed behind the cup.
   In some older units the shim may be be located behind the pinion head, under the rear pinion bearing cone. Here the chamfer must be installed against the pinion head. (see Fig. 28).
2. Press the rear bearing cone onto the pinion.

NOTE: IF NEW TIMKEN BEARINGS ARE BEING INSTALLED, DO NOT CLEAN AND OIL THE BEARINGS. INSTALL THE BEARINGS AS RECEIVED. THESE BEARINGS ARE SUPPLIED WIT A LUBRICANT CALLED FERROCOTE WHICH IS THE SPECIFIED LUBRICANT FOR PRE-LOAD TORQUE MEASUREMENT. HOWEVER, SHOULD THE BEARING APPEAR VERY DRY OR CONTAMINATED, WASH IN A SUITABLE SOLVENT AND APPLY A RECOMMENDED HYPOID OIL. IN THIS CASE PRE-LOAD TORQUE SHOULD BE 0,8 - 1,5 Nm.

3. Place the pinion front bearing cone in the cup in the carrier.
4. Install the pinion oil seal in the carrier casting. The outer face of the seal should be flush with carrier face. (Fig. 29).

5. Position the original (or mid range) pre-load shim on the drive pinion with the chamfered side towards the shoulder.
6. Install the companion flange into the seal and hold firmly against the front pinion bearing cone.
7. Enter the pinion from the back of the carrier and into the companion flange. If necessary, support pinion head and tap the flange with a soft mallet to start it on the pinion splines and start the pinion nut on the threads.
8. Holding the flange, tighten the pinion nut. As the pinion nut is tighten, the pinion shaft is pulled onto the front bearing cone and onto the flange. As soon as there is pre-load on the bearing, rotate the pinion several turns in one direction only, to seat the bearing rollers.

IMPORTANT: DO NOT APPLY FULL NUT TORQUE AT THIS STAGE. CHECK THE PRE-LOAD WHILE THE PINION NUT IS BEING TIGHTENED; IF THERE IS ANY SUSPICION THAT THE PRE-LOAD WILL BE GROSSLY IN EXCESS OF THE SPECIFIED FIGURE, REMOVE THE PINION SHAFT AND FIT A THICKER PRE-LOAD SHIM SINCE OVER-TIGHTENING THE BEARINGS CAN CAUSE PREMATURE FAILURE. TIGHTEN THE PINION NUT TO THE SPECIFIED TORQUE. (REFER 9 BELOW).

NOTE: PINION SHAFT SHOULD BE PRESSED OUT AS HAMMERING WILL DAMAGE PINION BEARINGS.

9. Measure the pre-load. With the nose of the carrier up, take readings at a smooth and steady speed through a few revolutions in one direction only. Correct torque readings and any binding conditions (usually caused by dirt or faulty bearing).

PINION BEARING PRE-LOAD TORQUE SPECIFICATION

Model 75, 76	1,0 - 2,0 Nm (new bearings)
Model 80	1,5 - 2,5 Nm (new bearings)
	0,8 - 1,5 Nm (used/oiled bearings)

Pinion Nut Torque: 320 - 370 Nm for solid Pre-load Shim For Collapsible Shim, refer item 10.

REMEMBER: TO INCREASE PRE-LOAD, USE A THICKER PRE-LOAD SHIM.

TO DECREASE PRE-LOAD, USE A THICKER PRE-LOAD SHIM.

10. Should the gearset model incorporate a collapsible pre-load shim, tighten the pinion nut gradually, checking the pre-load at intervals until the correct pre-load torque is obtained.

IMPORTANT: UNDER NO CIRCUMSTANCES MAY THESE SHIMS BE RE-USED. IF THE PRE-LOAD TORQUE IS EXCEEDED DURING TIGHTENING, REMOVE THE PINION, REPLACE THE COLLAPSIBLE SHIM AND REPEAT THE PROCEDURE.

COLLAPSIBLE PINION PRE-LOAD SPACER

1. Install the pinion oil seal in the carrier housing. The outer face of the oil seal should be flush with carrier face.

CAUTION: IF THE PINION IS THE TYPE WHICH USES A COLLAPSIBLE SPACER TO OBTAIN PINION BEARING PRE-LOAD, IT IS ESSENTIAL THAT THE OIL SEAL BE INSTALLED AT THIS POINT, AS THE PINION NUT MAY NOT BE LOOSENED IN ORDER TO INSTALL THE OIL SEAL AFTER FINAL ASSEMBLY.

(a) Install the pre-load spacer on the pinion.

NOTE: TWO TYPES OF PINION PRE-LOAD SHIMS ARE USED IN GEARMAX AXLES:

(a) SOLID SHIM
(b) COLLAPSIBLE SPACER

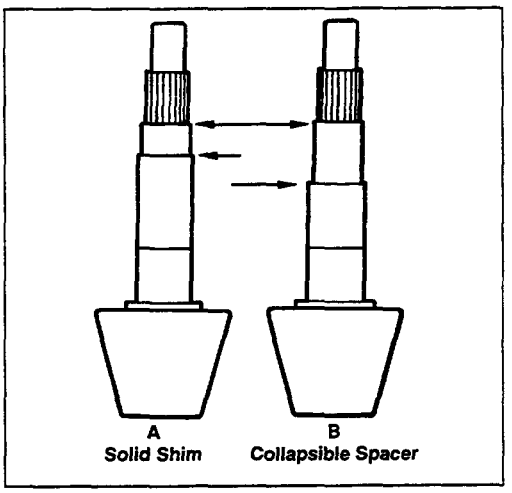

Figure 30

The chart listed below indicates the introduction model part number for the various model axles. The model part number appears on the I.D. TAG as a prefix to the serial number.

(b) AXLES WITH MODEL PART NUMBERS INDICATED IN THE CHART AND HIGHER WILL HAVE COLLAPSIBLE SPACER TYPE GEARSETS.

The lettering on the collapsible spacer model I.D. tags will be RED while all solid shim models will continue with the BLACK lettering currently used.

AXLE MODEL AXLE TYPE	PART NUMBER FROM THIS NO. AND HIGHER
M68	FROM PREFIX 171 - COLLAPSIBLE
M70	FROM PREFIX 150 - COLLAPSIBLE
M71	FROM PREFIX 050 - COLLAPSIBLE
M75	FROM PREFIX 250 - COLLAPSIBLE
M76	FROM PREFIX 034 - COLLAPSIBLE

SERIAL No.
PREFIX → 053 – 01001

85 BC 4006 AA
oM71 RATIO 4.11o

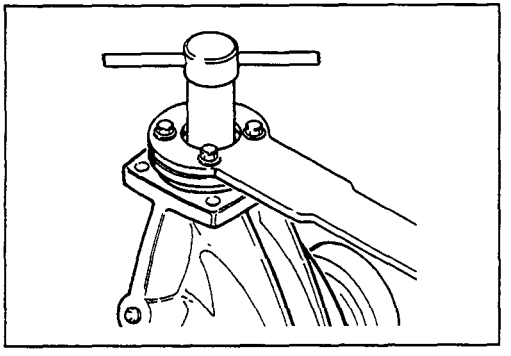

Figure 31

2. Install the companion flange into the seal and hold firmly against the front pinion bearing cone.
3. Enter the pinion from the back of the carrier and into the flange. Use the tool as illustrated to draw the pinion spline into the companion flange, sufficiently for the pinion nut to start on the threads. (see Fig. 31).

NOTE: ONLY THE ONE PIECE COLLAR NUT MAY BE USED WITH THE COLLAPSIBLE SPACER.

4. Holding the companion flange, tighten the pinion nut. As the pinion nut is tightened, the front pinion bearing cone and companion flange are pulled onto the pinion shaft.

SETTING PINION BEARING PRE-LOAD WITH THE COLLAPSIBLE SPACER:

WARNING: STRICT RULES APPLY FOR PRE-LOAD SETTING USING COLLAPSIBLE SPACERS. THESE ARE:-

(a) If the pinion pre-load is set too high, the pinion nut **may not be backed off** to correct the pre-load torque. The pinion must be disassembled, DISCARD the collapsible spacer and repeat the assembly sequence.
(b) Only the one piece pinion nut may be used.
(c) An accurate torque wrench (1-5 Nm) must be used to measure pinion pre-load torque, and should be a dial type readout, not the clicker type.
(d) A dial indicator, stand and clamp are needed to mea sure pinion bearing end float during the pre-load setting sequence.

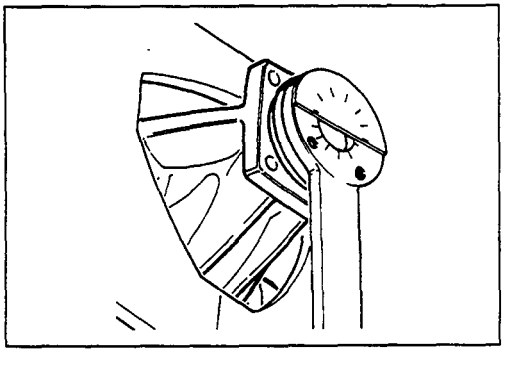

Figure 32

(e) Cut out the protractor on page and park the companion flange retaining spanner in 10 degree steps as shown in Fig. 32.

5. **METHOD:**
(a) Tighten the pinion nut checking frequently for end float, until a small amount of end float remains.
(b) Measure the end float by attaching a dial indicator to the carrier and while rotating the flange back and forth through approximately 45 degrees, lift upwards. (ref. Fig. 5).
(c) Zero the dial indicator while maintaining the upward force on the pinion, then repeat the process while pressing down on the flange, and note the reading.
(d) Reduce the end float to between 0,20 mm and 0,05 mm by further tightening the pinion nut.
6. Refer to the chart below (step 7) and check the measured end float against the ranges of end float listed in column A.

Column B indicates the number of degrees of nut rotation for a given amount of float.

7. PINION END FLOAT vs NUT ROTATION FOR PRE-LOAD SETTING:

A END FLOAT	B NUT ROTATION
0.20 - 0.18 mm	70 - 66 degrees
0.17 - 0.15 mm	64 - 59 degrees
0.14 - 0.12 mm	57 - 52 degrees
0.11 - 0.09 mm	50 - 45 degrees
0.08 - 0.06 mm	43 - 37 degrees
0.05 - 0.03 mm	36 - 32 degrees
0.02 - 0.00 mm	30 - 25 degrees

8. Tighten the pinion nut the required amount as indicated in the above chart. Measure the pre-load torque using a suitable torque wrench.

Pinion pre-load torque spec for collapsible spacer	1,7 - 2,5 Nm

9. Should the pre-load torque be less than the specified torque, tighten the nut a further 5 degrees and re-check the pre-load torque.

10. **REMEMBER:**
IF THE TOOTH CONTACT REQUIRES CHANGING THE CONTACT SHIM, THE PINION PRE-LOAD SPACER MUST BE REPLACED AND THE ABOVE PROCEDURE REPEATED.

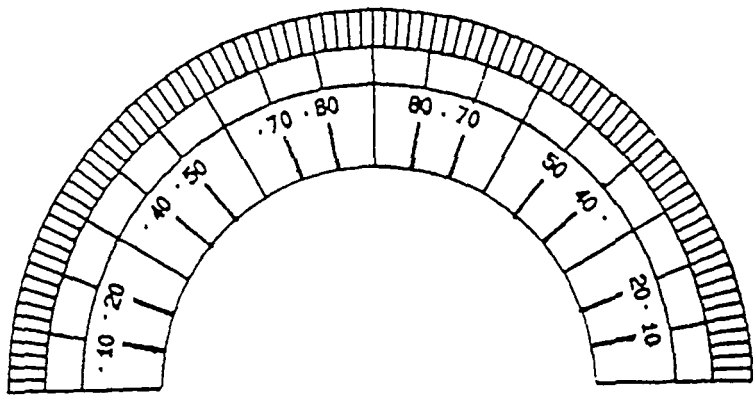

1. Make a photostat copy of the protractor above.
2. Cut the protractor out and attach it to the flange retaining spanner as shown on page 25 Fig. 32 of the Service Manual.
3. Mark the inner circumference of the flange in 10 degrees steps from 10 degrees to 360 degrees. (ie. the full circle).
4. Once the 10 degree steps have been transferred to the flange, they should be checked and then permanently set using a sharp chisel.

SUMMARY OF REBUILD OPERATION

1. Select differential bearing shims as per string pull method described on page 23.
   When the diff pre-load is correct, remove the diff assembly from the carrier.
2. Select the pinion contact shim (refer page 27) and assemble the pinion into the carrier as described (refer page 29).
   When the pinion pre-load torque is correct, install the differential assembly into the carrier.
   Using the breakaway method on page 24, measure the backlash and diff pre-load. Should it be necessary to change backlash, the total sum of the R/H and L/H shims should remain constant (i.e. if the L/H shim is reduced by 0.05 mm then increase the R/H shim by 0.05 mm).
3. Conduct a tooth contact marking inspection (refer page 15) and refer to the chart on page 17 and 18.
   Re-select the contact shim if necessary, based on the guidelines of the chart on page 15.

NOTE:

(a) Correct tooth contact is the final acceptance of a correct build and contact shim selection.

(b) When changing the contact shim the pre-load shim requires the same amount of change as it moves in sympathy with the contact shim, pinion pre-load torque is to be re-checked each time.

(c) It is recommended that new bearings are used in all overhaul cases. The only time used bearings may be utilised is when the mileage covered is below 1 000 km.

A GOOD BUILD HAS CORRECT:

- **TOOTH CONTACT PATTERN**
- **PINION BEARING PRE-LOAD TORQUE**
- **BACKLASH**
- **DIFF BEARING PRE-LOAD TORQUE**

GEAR MARKING COMPOUND

This is available from Borg-Warner outlets in tins as shown in Fig. 33.

This compound is ready for use and should be applied sparingly for best results.

It is recommended that 2/3 of the gear be covered to ensure that accurate reading of the tooth contact is possible.

ISUZU

KB - SERIES

WORKSHOP MANUAL

SECTION 4C

FRONT WHEEL DRIVE

SECTION 4C
FRONT WHEEL DRIVE

TABLE OF CONTENTS

	PAGE
Main Data and Specifications	4C – 3
Special Parts Fixing Nut and Bolt	4C – 4
Recommended Liquid Gasket	4C – 7
Recommended Thread Locking Agnents	4C – 7
Servicing	4C – 8
General Description	4C – 9
Front Drive Axle Assembly	4C – 12
Removal and Installation	4C – 12
Disassembly	4C – 15
Inspection and Repair	4C – 18
Reassembly	4C – 19
Differential	4C – 22
Disassembly	4C – 22
Major Components	4C – 22
Minor Components	4C – 25
Inspection and Repair	4C – 27
Reassembly	4C – 29
Minor Components	4C – 29
Major Components	4C – 31
Front Hub and Disc (4 × 2 Model)	4C – 41
Disassembly	4C – 41
Inspection and Repair	4C – 44
Reassembly	4C – 45

Front Hub and Disc (4 × 4 Model) ..... 4C – 48
Disassembly ..... 4C – 48
Inspection and Repair ..... 4C – 50
Reassembly ..... 4C – 51
Front Hub and Disc (Automatic Locking Hub) ..... 4C – 54
Disassembly ..... 4C – 54
Inspection and Repair ..... 4C – 57
Reassembly ..... 4C – 59
Front Hub and Disc (Manual Locking Hub) ..... 4C – 66
Disassembly ..... 4C – 66
Inspection and Repair ..... 4C – 68
Reassembly ..... 4C – 69
Front Propeller Shaft ..... 4C – 74
Removal and Installation ..... 4C – 74
Disassembly ..... 4C – 76
Inspection and Repair ..... 4C – 77
Reassembly ..... 4C – 78
Troubleshooting ..... 4C – 80

MAIN DATA AND SPECIFICATIONS

FRONT AXLE AND DIFFERENTIAL

Ring gear size mm(in)		197 (7,75)
Axle tube		
Type		It consists of the duce, a cast iron housing and the axle tube.
Gear type		Hypoid
Gear ratio	(to 1)	
4ZE1 engine		4.777
4JA1 engine		4.777
4JB1T engine		4.555
Differential type		Two pinion
Oil capacity	litre (US/UK gal)	1.0 (0.26/0.22)
Axle shaft type		Constant velocity joint (Birfield joint type and double offset joint).
Hub locking type		Automatic locking and Manual locking free wheel hubs.

FRONT PROPELLER SHAFT

Transmission type		MSG	MUA
Outside diameter	mm(in)	32 (1.26)	40 (1.57)
Inside diameter	mm(in)	—	36.5 (1.44)
Length (between two spiders centre)	mm(in)	407 (16.02)	517 (20.35)

SPECIAL PARTS FIXING NUTS AND BOLTS

FRONT DRIVE AXLE AND PROPELLER SHAFT

kg·m(lb.ft./N·m)

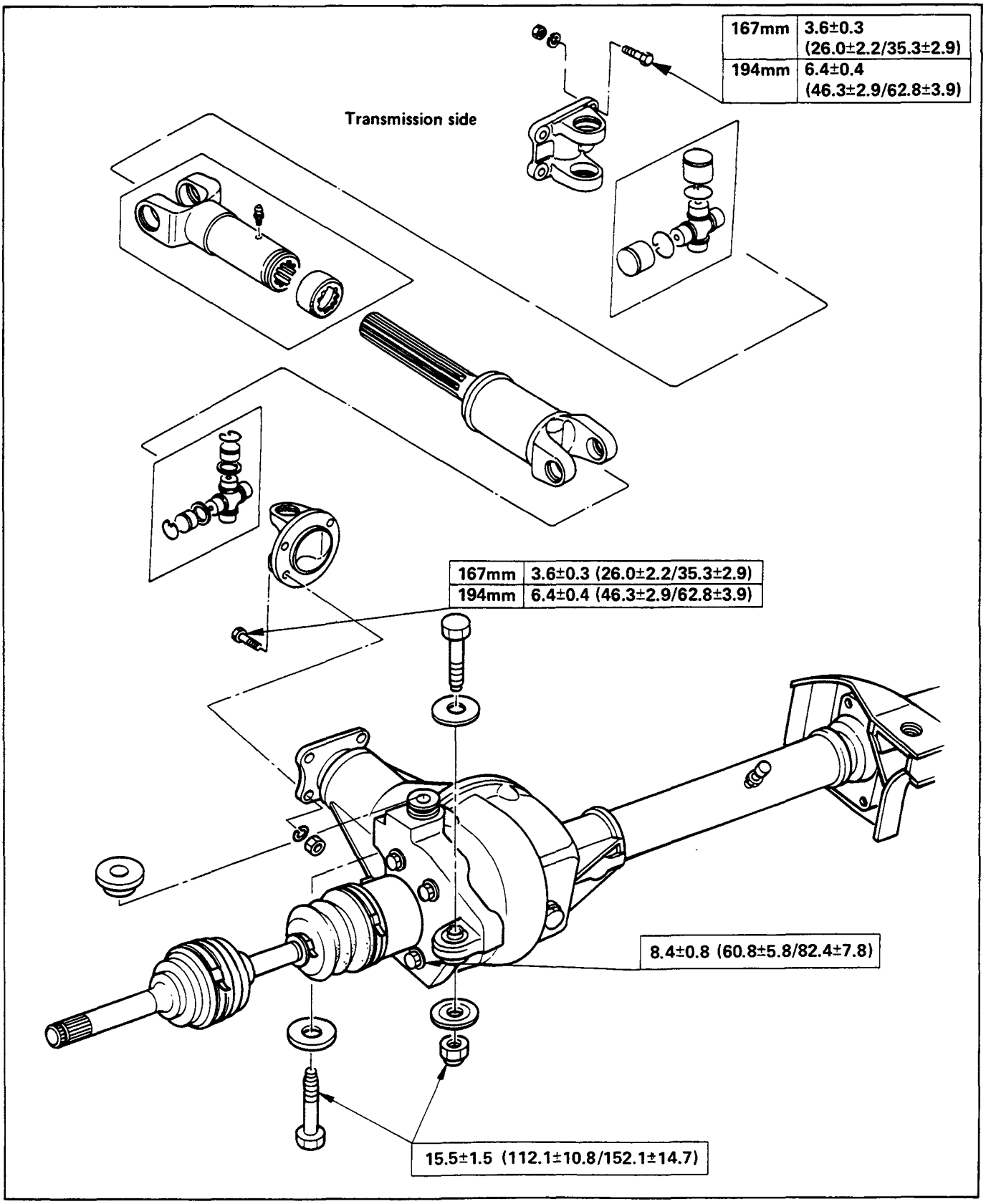

FRONT DIFFERENTIAL

kg·m(lb.ft./N·m)

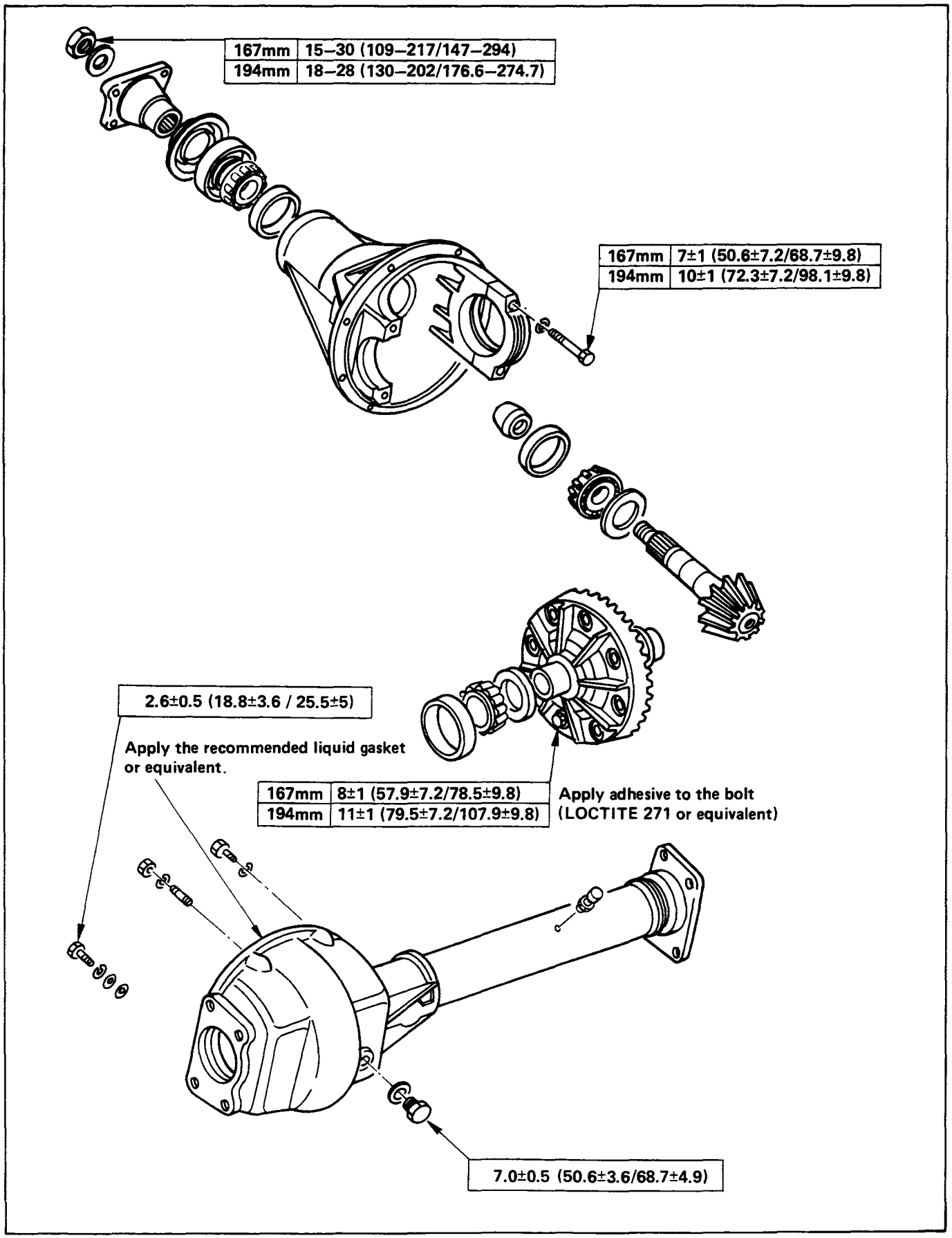

FREE WHEELING HUB

kg·m(lb.ft./N·m)

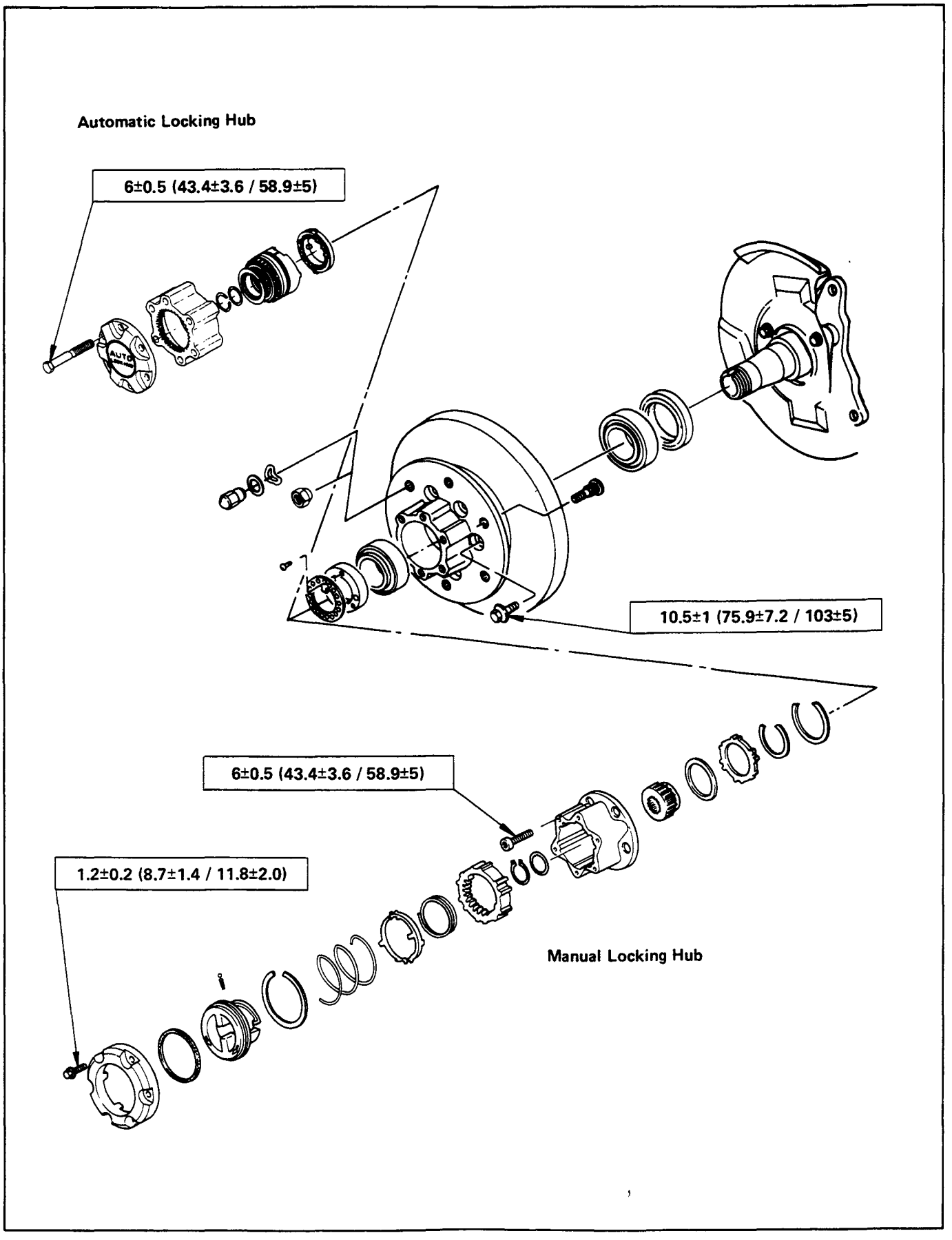

RECOMMENDED LIQUID GASKET

Type	Brand Name	Manufacturer	Remarks
RTV* Silicon Base	ThreeBond 1207B ThreeBond 1207C ThreeBond 1215	Three Bond Three Bond Three Bond	For Engine Repairs For Axle Case Repairs, T/M
Water Base	ThreeBond 1141E	Three Bond	For Engine Repairs
Solvent	ThreeBond 1104 BelcoBond 4 BelcoBond 401 BelcoBond 402	Three Bond Isuzu Isuzu Isuzu	For Engine Repairs
Anerobic	LOCTITE 515 LOCTITE 518	Loctite Loctite	All

* RTV : Room Temperature Vulcanizer

Note:

1. **It is very important that the liquid gaskets listed above or their exact equivalent be used on the vehicle.**
2. **Be careful to use the specified amount of liquid gasket.**
   Follow the manufacturer's instructions at all times.
3. **Be absolutely sure to remove all lubricants and moisture from the connecting surfaces before applying the liquid gasket.**
   The connecting surfaces must be perfectly dry.
4. **LOCTITE 515 and LOCTITE 518 harden upon contact with a metal surface.**
   Do not apply LOCTITE 515 or LOCTITE 518 between two metal surfaces having a clearance of greater than 0.25 mm (0.01 in). Poor adhesion will result.

RECOMMENDED THREAD LOCKING AGENTS

LOCTITE Type	LOCTITE Color	Application Steps
LOCTITE 242	Blue	1. Completely remove all lubricant and moisture from the bolts and the female threaded surfaces of the parts to be joined. The surfaces must be perfectly dry. 2. Apply LOCTITE to the bolts. 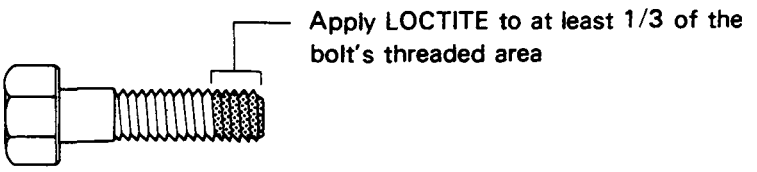 3. Tighten the bolts to the specified torque. 4. Wait at least one hour before continuing the installation procedure.
LOCTITE 262	Red	
LOCTITE 270	Green	
LOCTITE 271	Red	

SERVICING

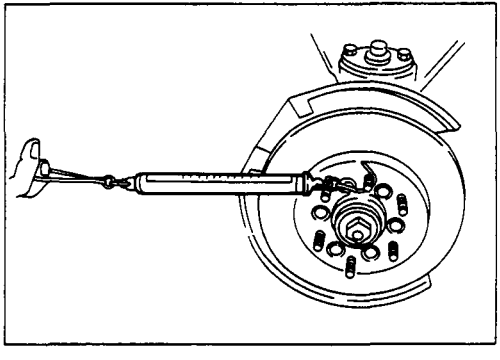

Hub Bearing Preload at the Wheel Pin

4 x 4 Model	kg(lb)
New bearing and New oil seal	2 —2.5 (4.4—5.5)
Reuse bearing and New oil seal	1.2—1.8 (2.6—4.0)

4 x 2 Model	kg(lb)
New bearing and New oil seal	0.8—1.0 (1.8—2.2)
Reuse bearing and New oil seal	0.8—1.0 (1.8—2.2)

GENERAL DESCRIPTION

FRONT DRIVE AXLE

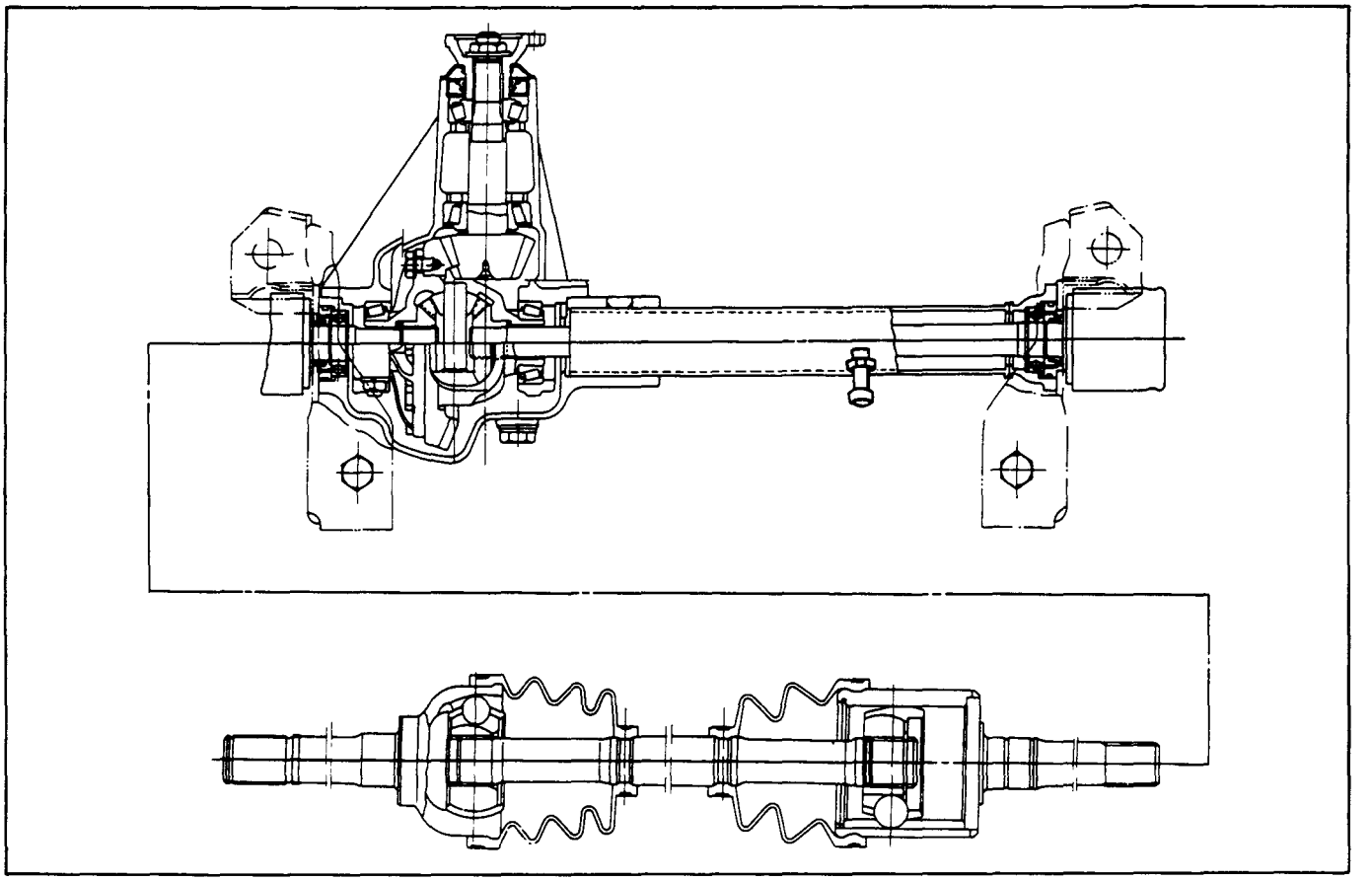

FRONT HUB AND DISC (4 x 2 model)

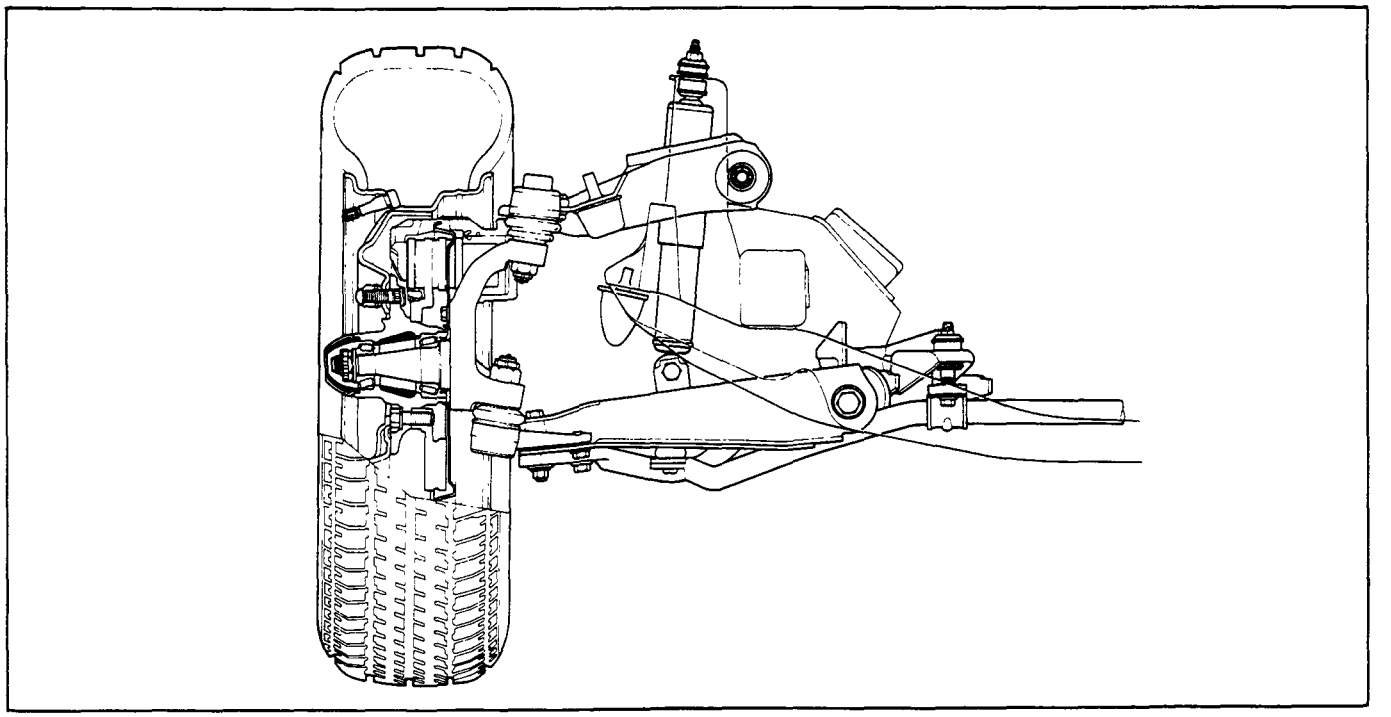

FRONT HUB AND DISC (4 x 4 model)

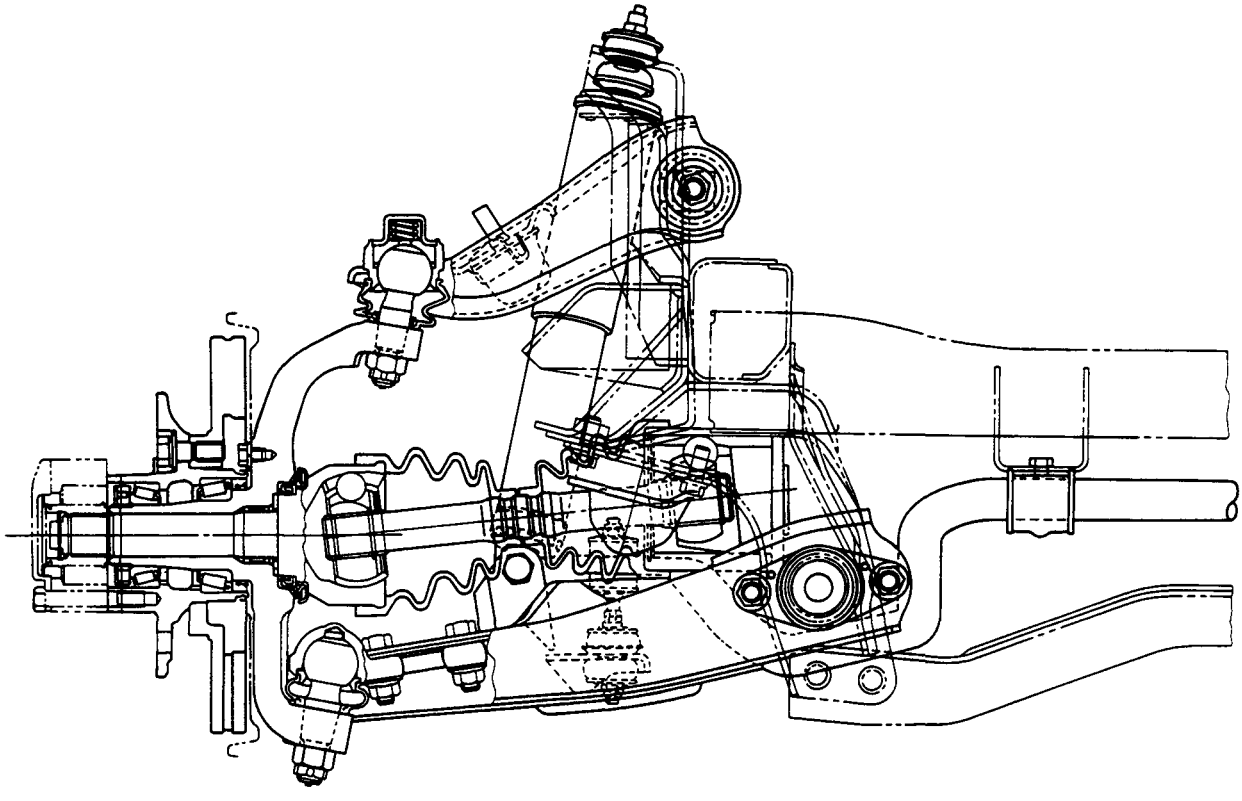

LOCKING HUB

AUTOMATIC TYPE

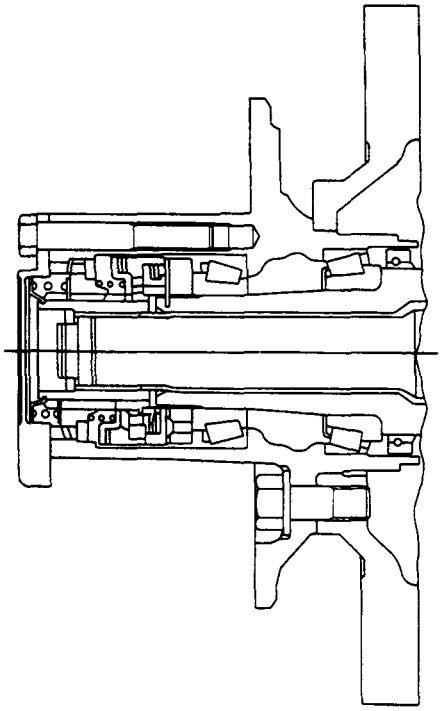

MANUAL TYPE

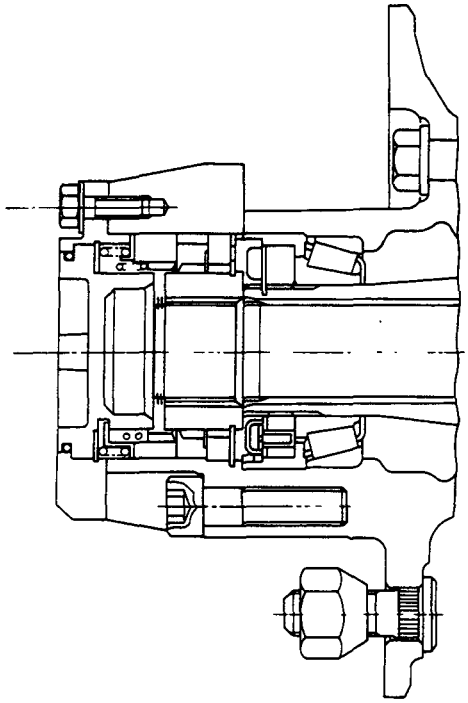

FRONT PROPELLER SHAFT

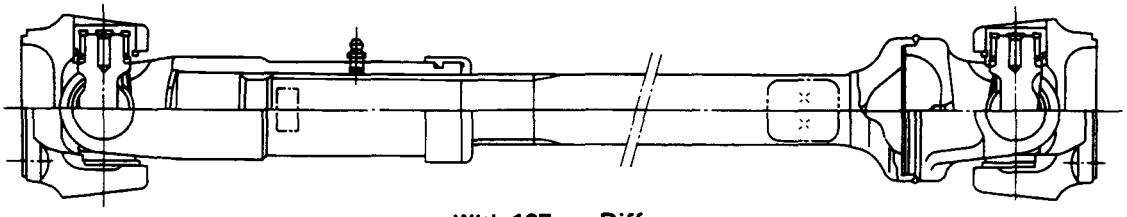

With 167mm Diff.

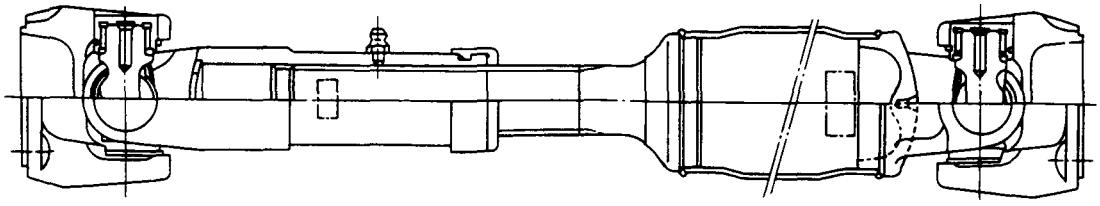

With 194mm Diff.

FRONT DRIVE AXLE ASSEMBLY

REMOVAL AND INSTALLATION

1. Refer to SECTION 3E "WHEEL AND TIRES" for road wheel Disassembly and Reassembly procedure.
2. Refer to SECTION 5 "BRAKES" for disc brake caliper removal and installation procedure.
3. Refer to SECTION 3B "STEERING" for Steering linkage removal and installation procedure.
4. Refer to SECTION 4C "FRONT WHEEL DRIVE" for Automatic hub disassembly and reassembly procedure.

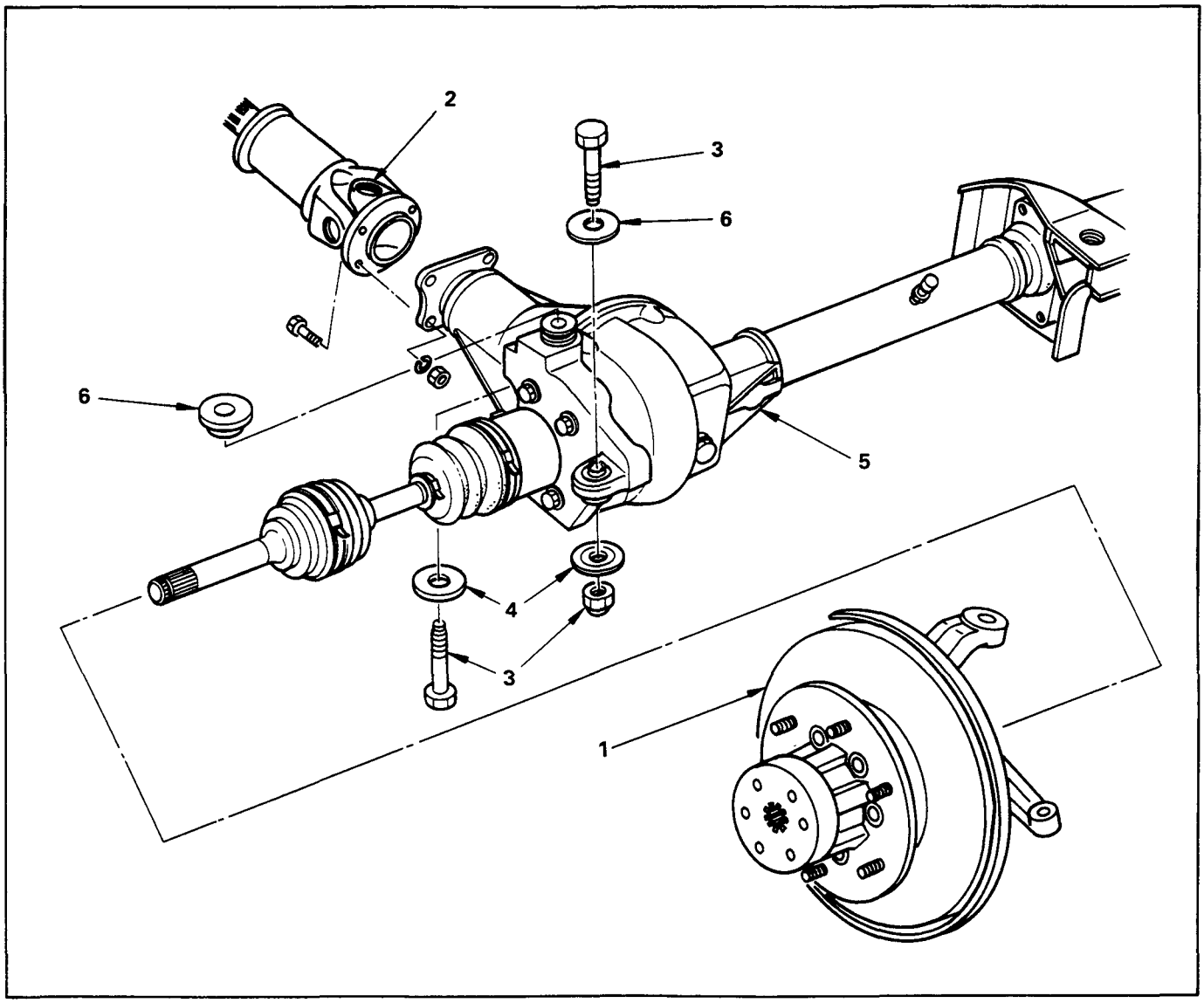

Removal Steps

- ▲ 1. Assembly of hub and disc, back plate, knuckle, knuckle arm, and lower end.
- ▲ 2. Propeller shaft
- 3. Nut and bolt
- 4. Washer
- ▲ 5. Front drive axle assembly
- 6. Washer

Installation Steps

- 6. Washer
- ▲ 5. Front drive axle assembly
- 4. Washer
- ▲ 3. Nut and bolt
- ▲ 2. Propeller shaft
- 1. Assembly of hub and disc, back plate, knuckle, knuckle arm, and lower end.

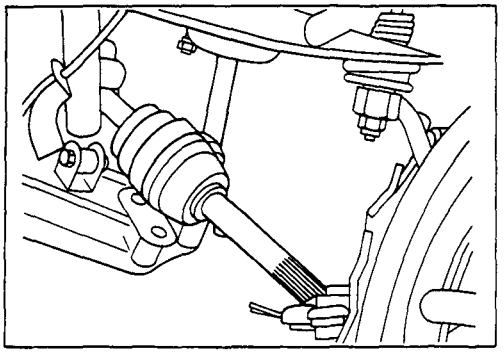

Important Operations — Removal

1. Assembly of hub and disc, back plate, knuckle, knuckle arm, and lower end.

Before removal, jack up the front of vehicle and support the frame with jack stands.

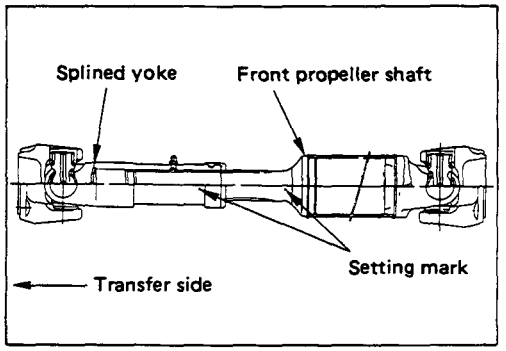

2. Propeller Shaft

Apply the setting marks.

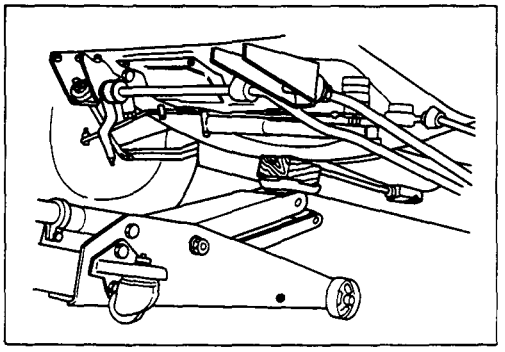

5. Front Drive Axle Assembly

(1) Put the lifting jack under the center part of the front.

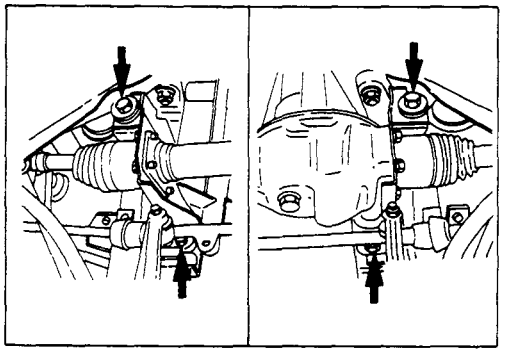

(2) Remove four bolts fixing axle case mounting brackets to the frame.

Note:

Be careful not to damage birfield joints or double off-set joints when supporting axle shaft assembly.

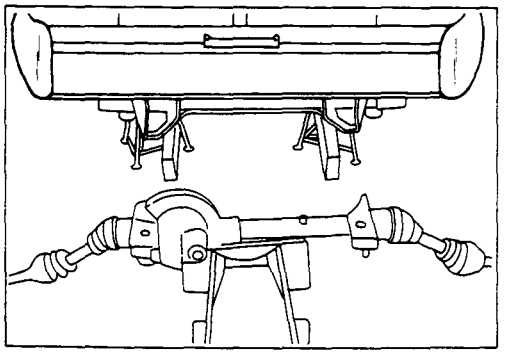

(3) Lower the front axle assembly and roll it out toward the front of the vehicle.
Take care not to damage the birfield joints or the double off-set joints.

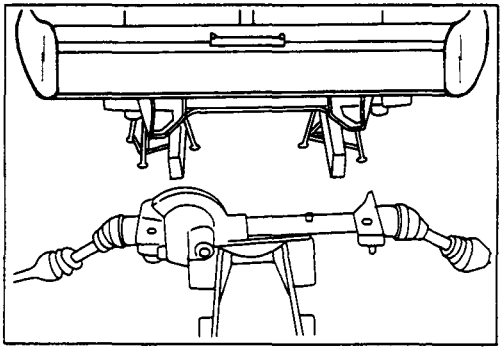

Important Operations — Installation

5. Front Drive Axle Assembly

Place the front axle assembly in position under the vehicle using a lifting jack.

3. Nut

Front Axle Mounting Nut Torque	kg·m(lb.ft./N·m)
15.5 ± 1.5 (112.1 ± 10.8/152.1 ± 14.7)	

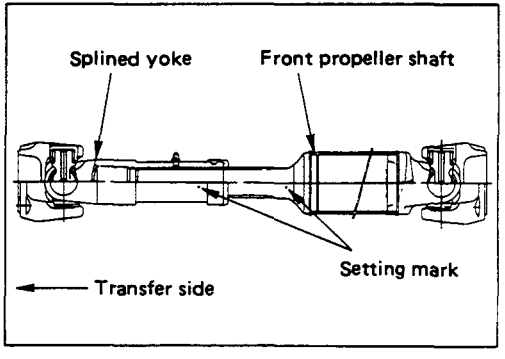

2. Propeller Shaft

Align the setting marks applied the removal.

Bolt Torque	kg·m(lb.ft/N·m)
167 mm	3.6 ± 0.3 (26.0 ± 2.2/35.3 ± 2.9)
194 mm	6.4 ± 0.4 (46.3 ± 2.9/62.8 ± 3.9)

DISASSEMBLY

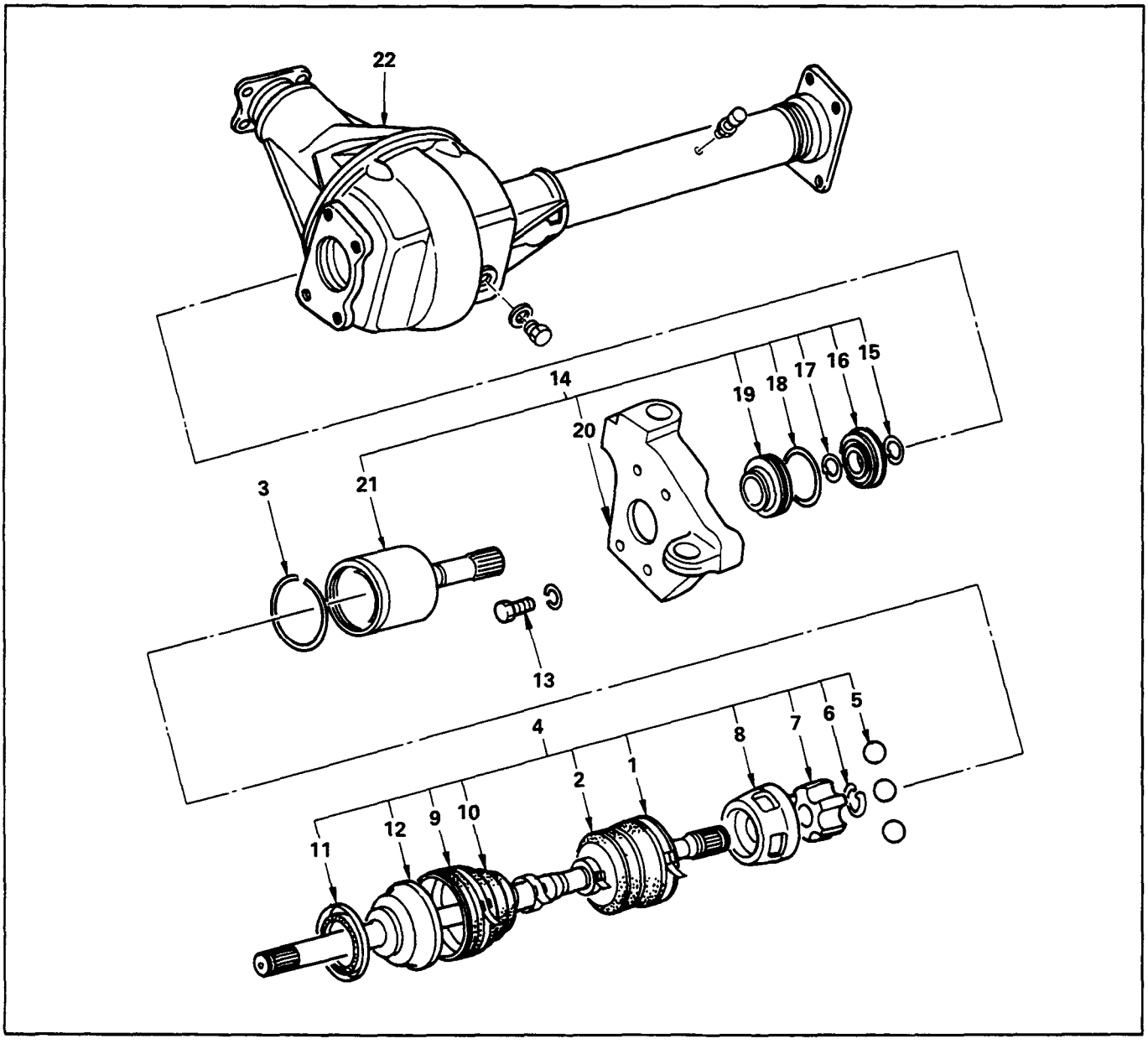

Disassembly Steps

- ▲ 1. Band
- 2. Bellows
- ▲ 3. Circlip
- 4. BJ shaft assembly
- ▲ 5. Ball
- ▲ 6. Snap ring
- 7. Ball retainer
- 8. Ball guide
- ▲ 9. Band
- 10. Bellows
- 11. Dust seal
- 12. BJ shaft
- 13. Bolt
- 14. DOJ case assembly
- 15. Snap ring
- 16. Bearing
- 17. Snap ring
- 18. O-ring
- 19. Oil seal
- 20. Bracket
- 21. DOJ case
- 22. Axle case and differential

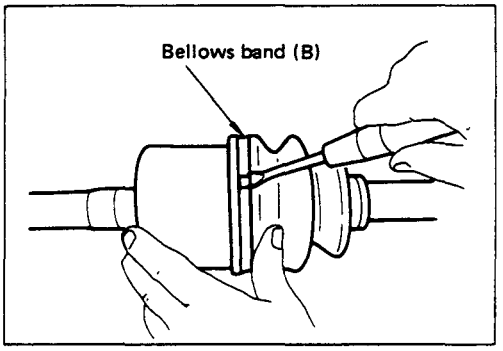

Important Operations

1. Band

Raise the hooked end of the band with a screwdriver or equivalent.

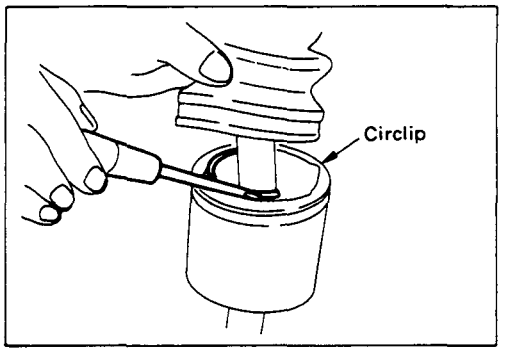

3. Circlip

Pry off with a screwdriver or equivalent.

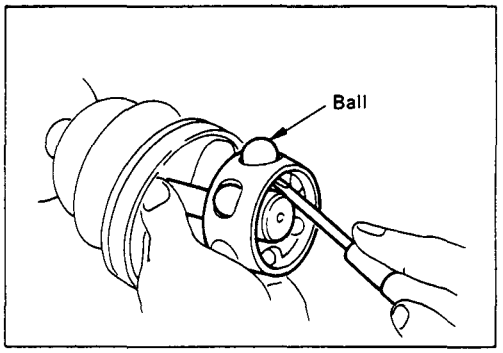

5. Ball

Remove the six balls with a screwdriver or equivalent.

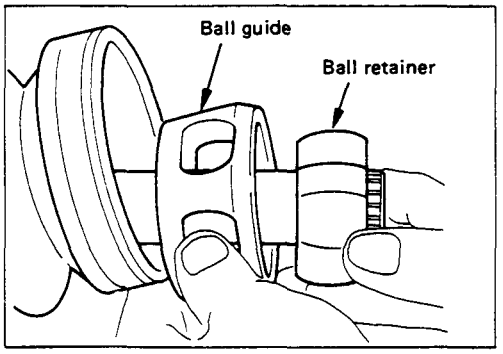

Rotate the case half a pitch to align the ball guide on the case with the projected portion of the ball retainer, then slide the case toward the bellows. The case can not be removed in the reverse direction.

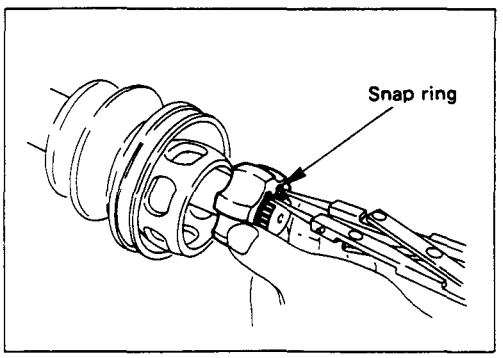

6. Snap Ring

Remove the snap ring fastening the ball retainer to the center shaft.

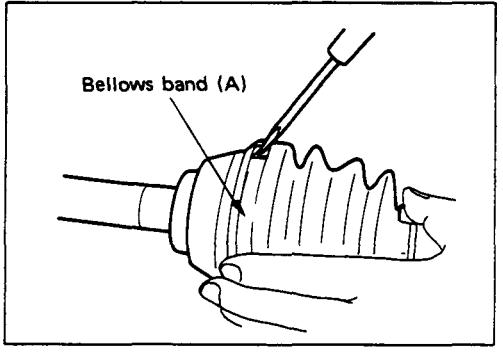

9. Band

Raise the hooked end of the band with a screw driver or equivalent.

INSPECTION AND REPAIR

Make all necessary adjustments, repairs, and part replacements if wear, damage, or other problems are discovered during inspection.

- BJ assembly
- DOJ case, ball, ball guide ball retainer
- Bellows
- Bearing
- Dust seal, oil seal

Visual Check

Inspect the following parts for wear, damage, or other abnormal conditions.

REASSEMBLY

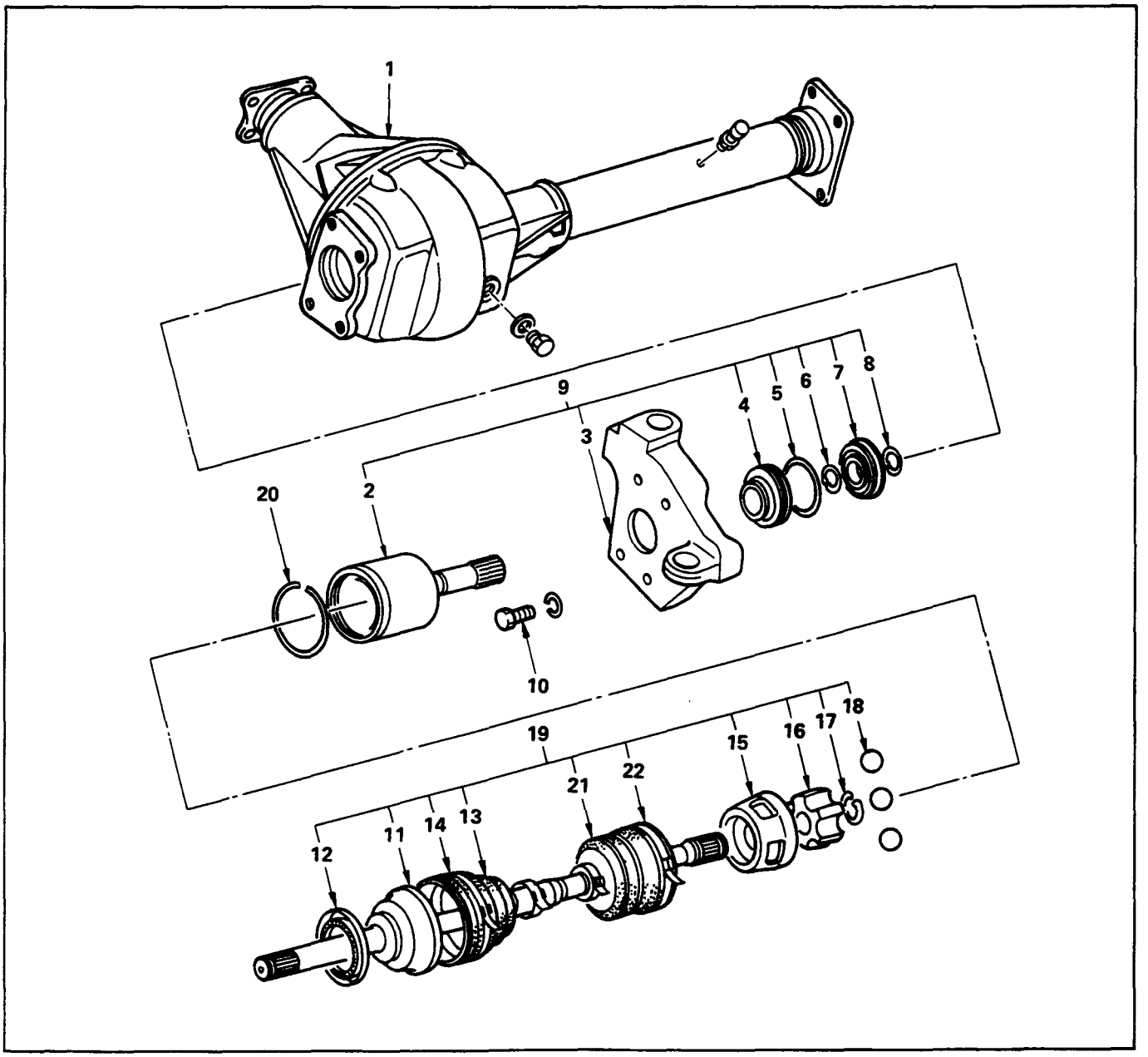

Reassembly Steps

1. Axle case and differential
2. DOJ case
3. Bracket
4. Oil seal
5. O-ring
6. Snap ring
7. Bearing
8. Snap ring
9. DOJ case assembly
▲10. Bolt
11. BJ shaft
12. Dust seal
▲13. Bellows
▲14. Band
▲15. Ball guide
▲16. Ball retainer
▲17. Snap ring
▲18. Ball
▲19. BJ shaft assembly
▲20. Circlip
▲21. Bellows
▲22. Band

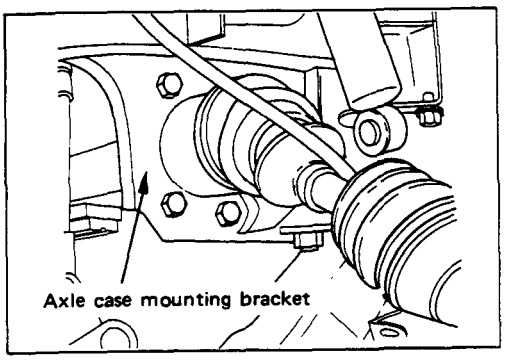

Important operations

10. Bolt

Bolt Torque	kg·m(lb.ft./N·m)
	$8.4^{\pm 0.8}$ ($60.8^{\pm 5.8}$/$82.4^{\pm 7.8}$)

13. Bellows

(1) Apply a thin coat of grease to the shaft for smooth installation.

(2) Apply specified grease to the 1/2 space of the bellows.

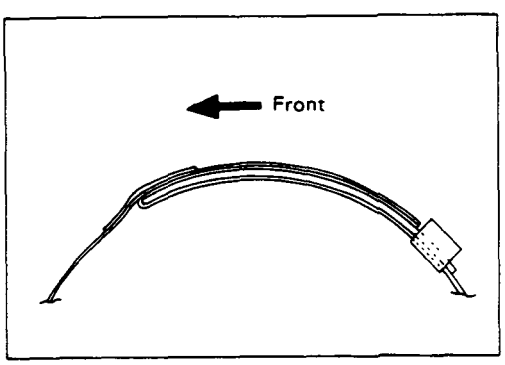

14. Band

Note the setting direction.
After installation, check that the bellows is free from distortion.

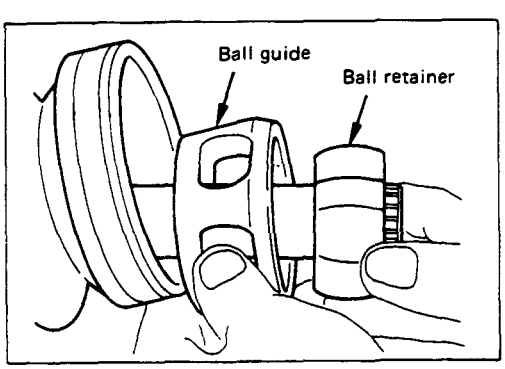

15. Ball Guide

16. Ball Retainer

Install the ball guide with the smaller diameter side ahead onto the shaft.

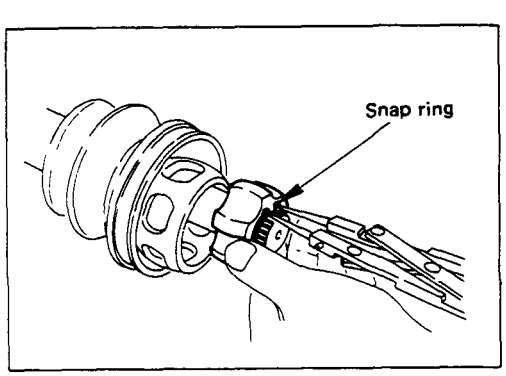

17. Snap Ring

Install the snap ring securing the ball retainer to the shaft.

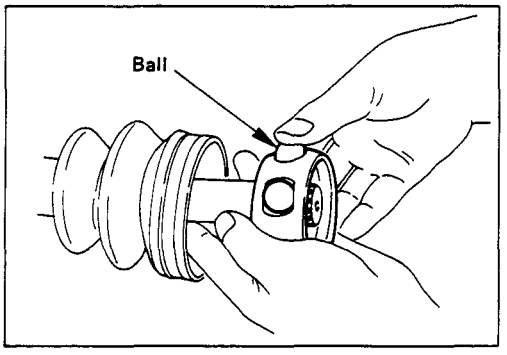

18. Ball

Bring the ball guide of the cage into alignment with the projected porton of the ring on the ball retainer, then turn the cage 1/2 pitch. Align the track on the ball retainer with the window in the cage and install the six balls into position.

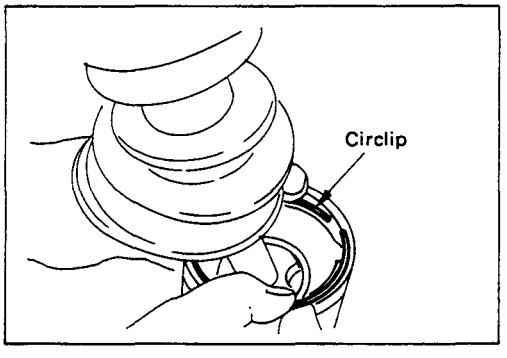

19. BJ Shaft Assembly

Apply specified grease to the half of the space of the DOJ case (Approx. 50g (1.8 oz))

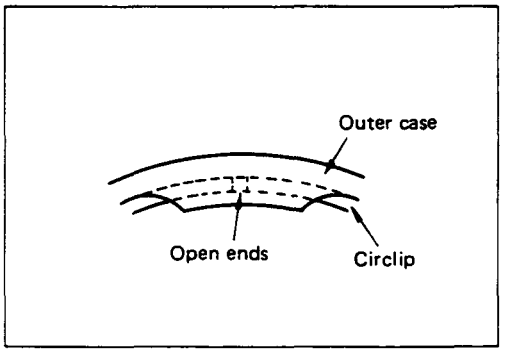

20. Circlip

Install the circlip so that open ends are positioned away from the ball groove.

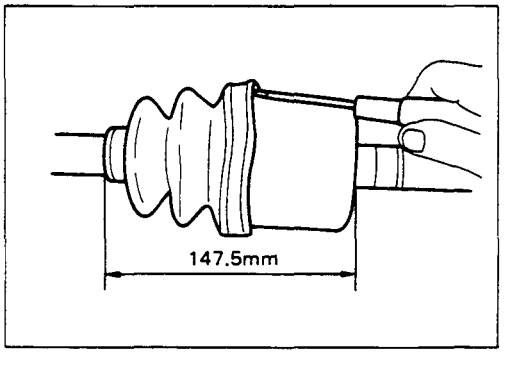

21. Bellows

(1) Before installation, insert the appropriate amount of specified grease into the DOJ case.

(2) Adjust the air pressure within the bellows by inserting a screwdriver or equivalent, so that it equals atmospheric pressure.

22. Band

After installation, check that the bellows is free from distortion.

DIFFERENTIAL

DISASSEMBLY

MAJOR COMPONENT

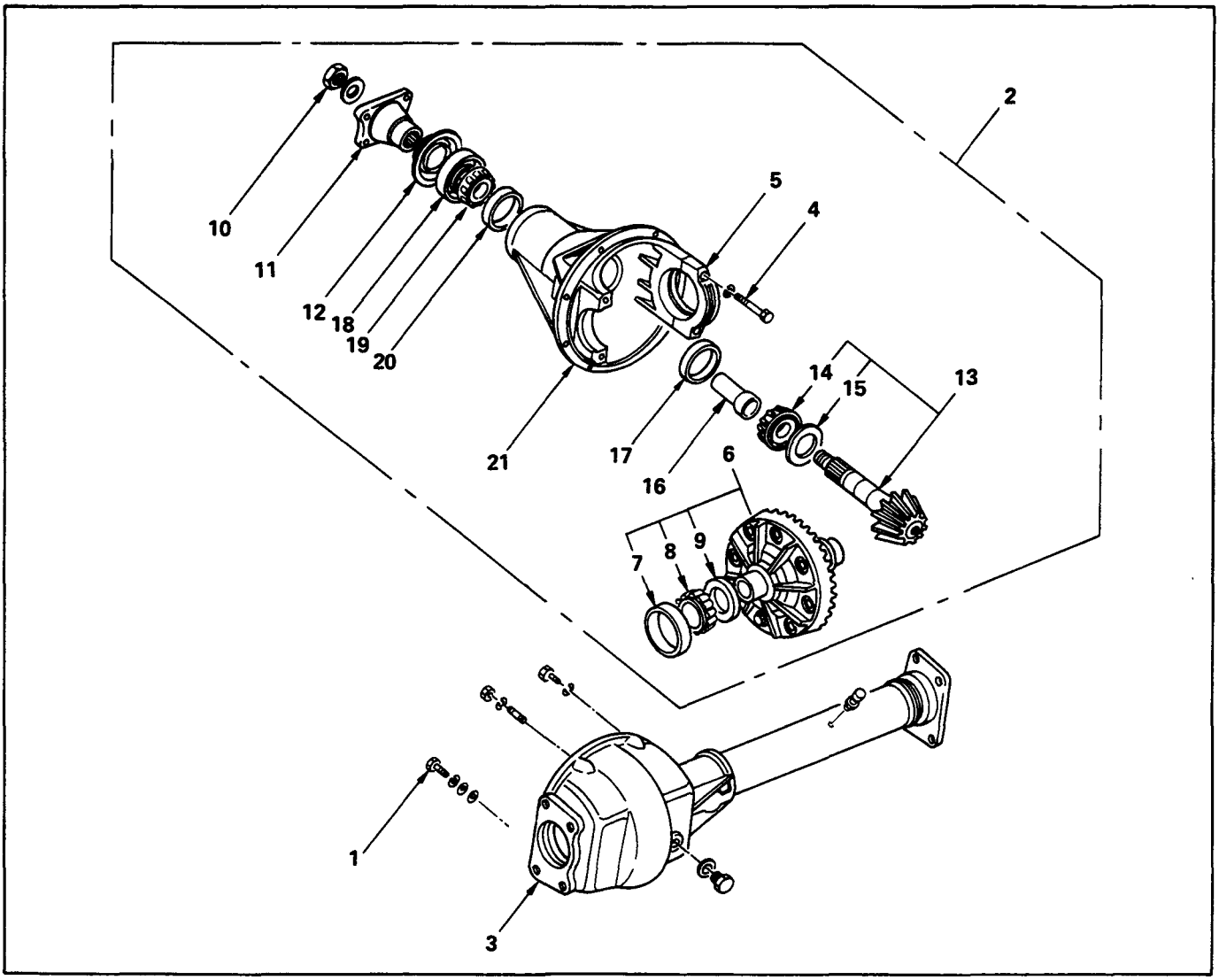

Disassembly Steps

1. Bolt
2. Differential assembly
3. Axle case
4. Bolt
▲ 5. Bearing cap
6. Diff. cage assembly
▲ 7. Side bearing outer race
▲ 8. Side bearing
▲ 9. Adjust shims
▲ 10. Flange nut
11. Flange
12. Dust cover
▲ 13. Pinion gear
▲ 14. Inner bearing
15. Adjust shim
16. Collapsible spacer
▲ 17. Inner bearing outer race
18. Oil seal
19. Outer bearing
▲ 20. Outer bearing outer race
21. Diff. carrier

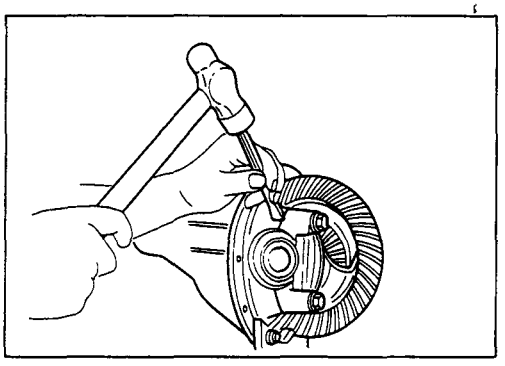

Important Operations

5. Bearing Cap

Apply a setting mark to the side bearing cap and the differential carrier.

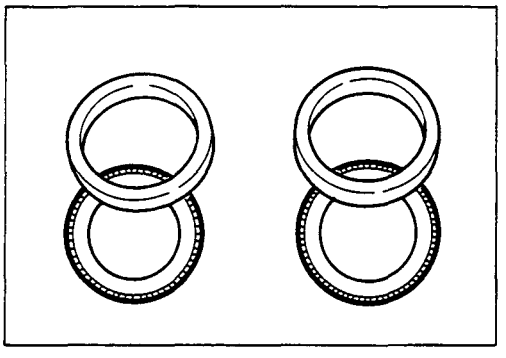

7. Side Bearing Outer Race

After removal, keep the right and left hand side bearing assemblies separate to maintain inner and outer race combinations.

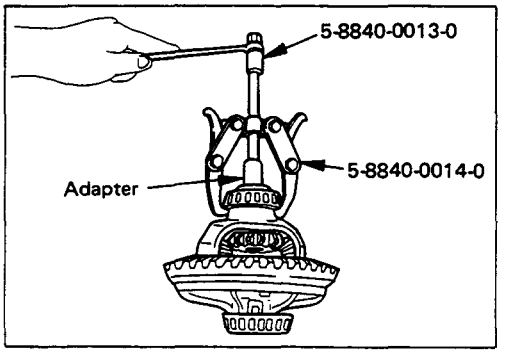

8. Side Bearing

Remover : 5-8840-0013-0
(J-22888)
5-8840-0014-0
(J-22888-30)

Adapter : 5-8521-0019-0 (167 mm)
9-8521-1743-0 (194 mm)
(J-8107-2)

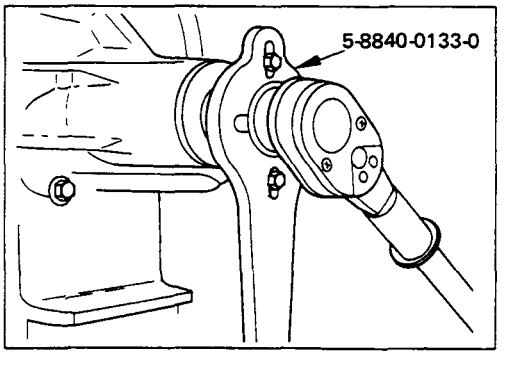

9. Adjust Shims

Note the thickness and position of the shims removed.

10. Flange Nut

Holding wrench : 5-8840-0133-0 (167 mm and 194 mm)
(J-8614-01)
or 9-8511-1342-0 (Only for 167 mm)

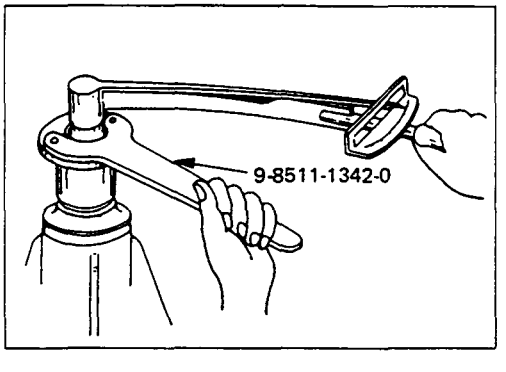

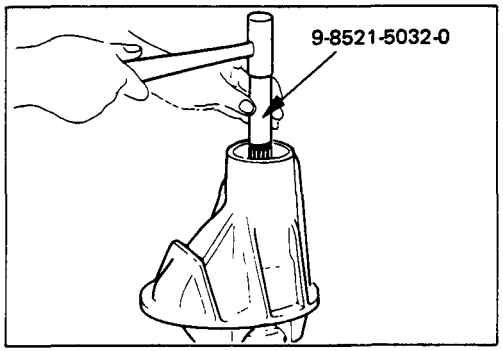

13. Pinion Gear

Remove the drive pinion assembly using a soft metal rod and a hammer.

Spindle : 9-8521-5032-0

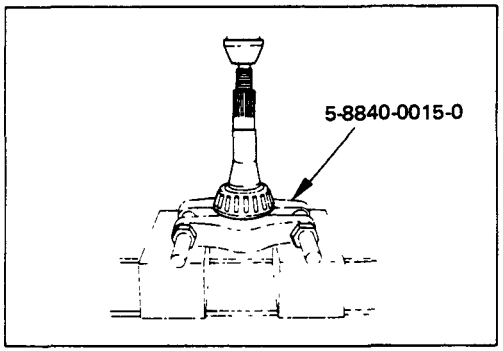

14. Inner Bearing

Remove the inner bearing using a separator and a press.

Separator : 5-8840-0015-0
(J-22912-01)

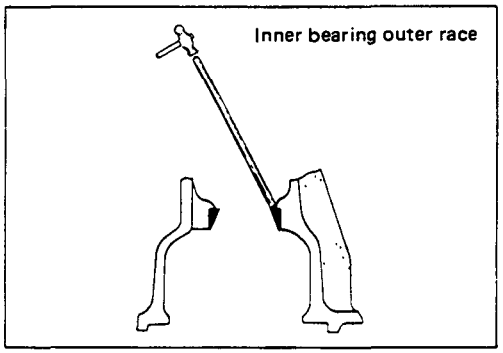

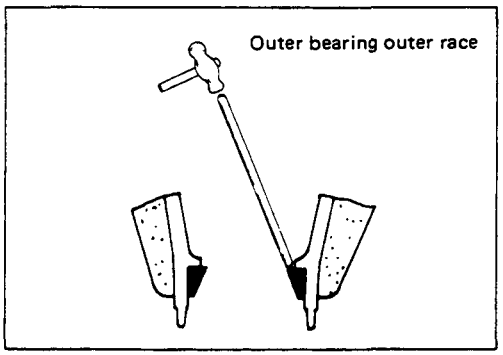

17. Inner Bearing Outer Race

20. Outer Bearing Outer Race

Remove the inner bearing outer race and the outer bearing outer race by using a brass bar and a hammer.

MINOR COMPONENTS

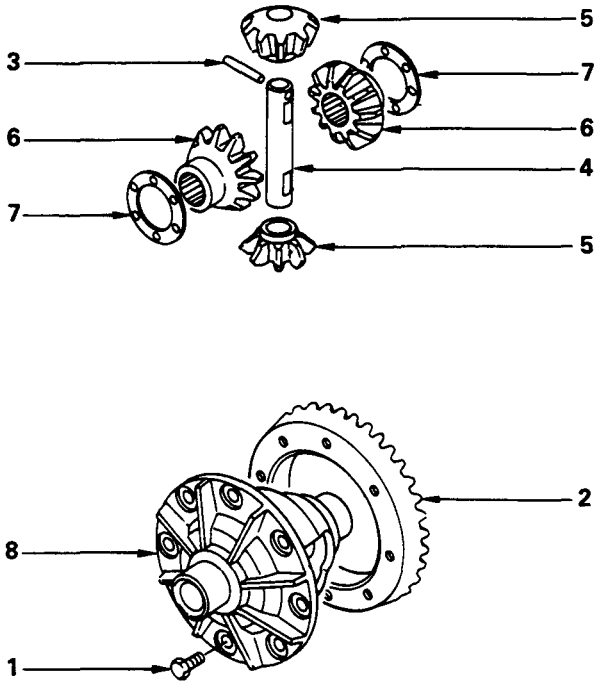

Disassembly Steps

1. Bolt
2. Ring gear
3. ▲ Lock pin
4. ▲ Cross pin
5. Pinion gear
6. Side gear
7. Thrust washer
8. Differential cage

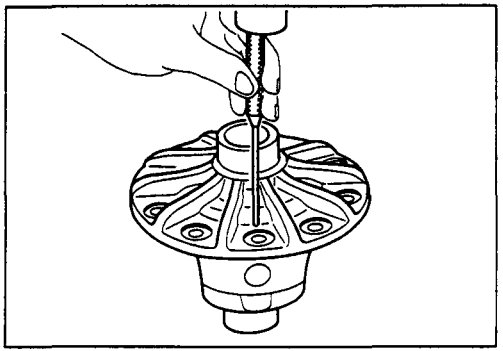

Important Operations

3. Lock Pin

Break staking on the lock pin using a 5 mm (0.20 in.) diameter drill.

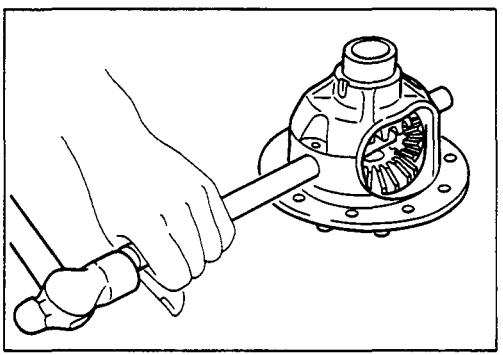

4. Cross Pin

Remove the cross pin using a soft metal rod and a hammer.

INSPECTION AND REPAIR

Make all necessary adjustment, repairs, and part replacements if wear, damage, or other problems are discovered during inspection.

- Ring gear, pinion gear
- Bearing
- Side gear, pinion gear, cross pin
- Differential cage, carrier
- Thrust washer
- Oil seal

Visual Check

Inspect the following parts for wear, damage, or other abnormal conditions.

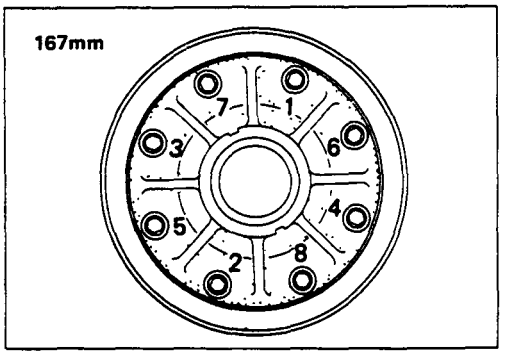

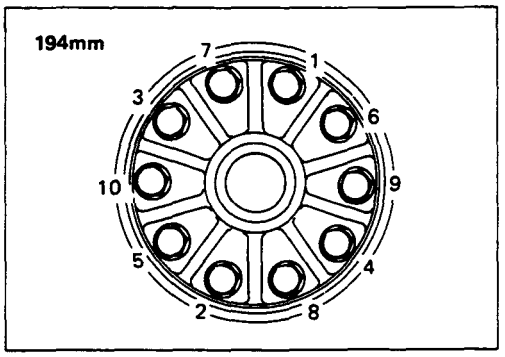

Ring Gear Replacement

(1) The ring gear should always be replaced with the drive pinion as a set.

(2) When installing the ring gear, apply LOCTITE 271 or equivalent to the threaded hole and bolt.

(3) Tighten the fixing bolts in a diagonal sequence as illustrated.

(4) Discard used bolts and install new ones.

Bolt Torque	kg·m(lb.ft/N·m)
167 mm	8 ± 1 (57.9 ± 7.2/ 78.5 ± 9.8)
194 mm	11 ± 1 (79.6 ± 7.2/107.9 ± 9.8)

For 167 mm

Note that all bolts have a left hand thread.

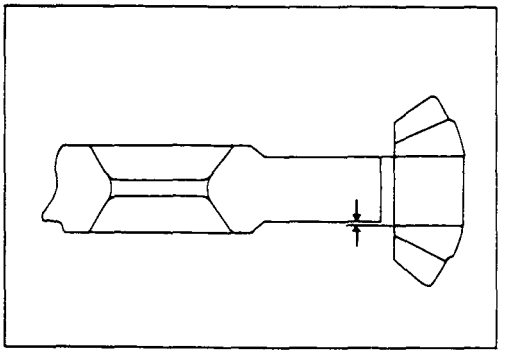

Clearance Between the Differential Pinion and the Cross Pin

mm(in)

	Standard	Limit
167mm	0.06—0.12 (0.002—0.005)	0.2 (0.008)
194mm	0.05—0.10 (0.002—0.004)	0.2 (0.008)

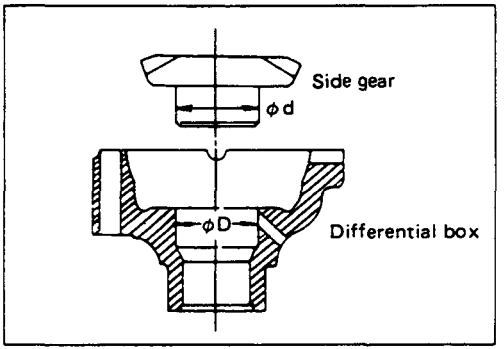

Clearance Between the Side Gear and the Differential Box

mm(in)

	Standard	Limit
167mm	0.03—0.11 (0.001—0.004)	0.15 (0.006)
194mm	0.03—0.10 (0.001—0.004)	0.15 (0.006)

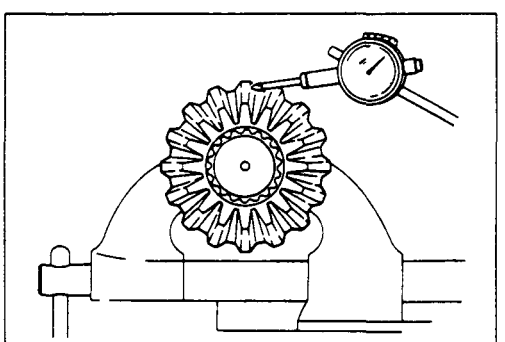

Play in Splines Between the Side Gear and the Axle Shaft

mm(in)

	Standard	Limit
167mm	0.11–0.38 (0.004–0.015)	0.30 (0.012)
194mm	0.07–0.36 (0.003–0.014)	0.25 (0.010)

REASSEMBLY

MINOR COMPONENTS

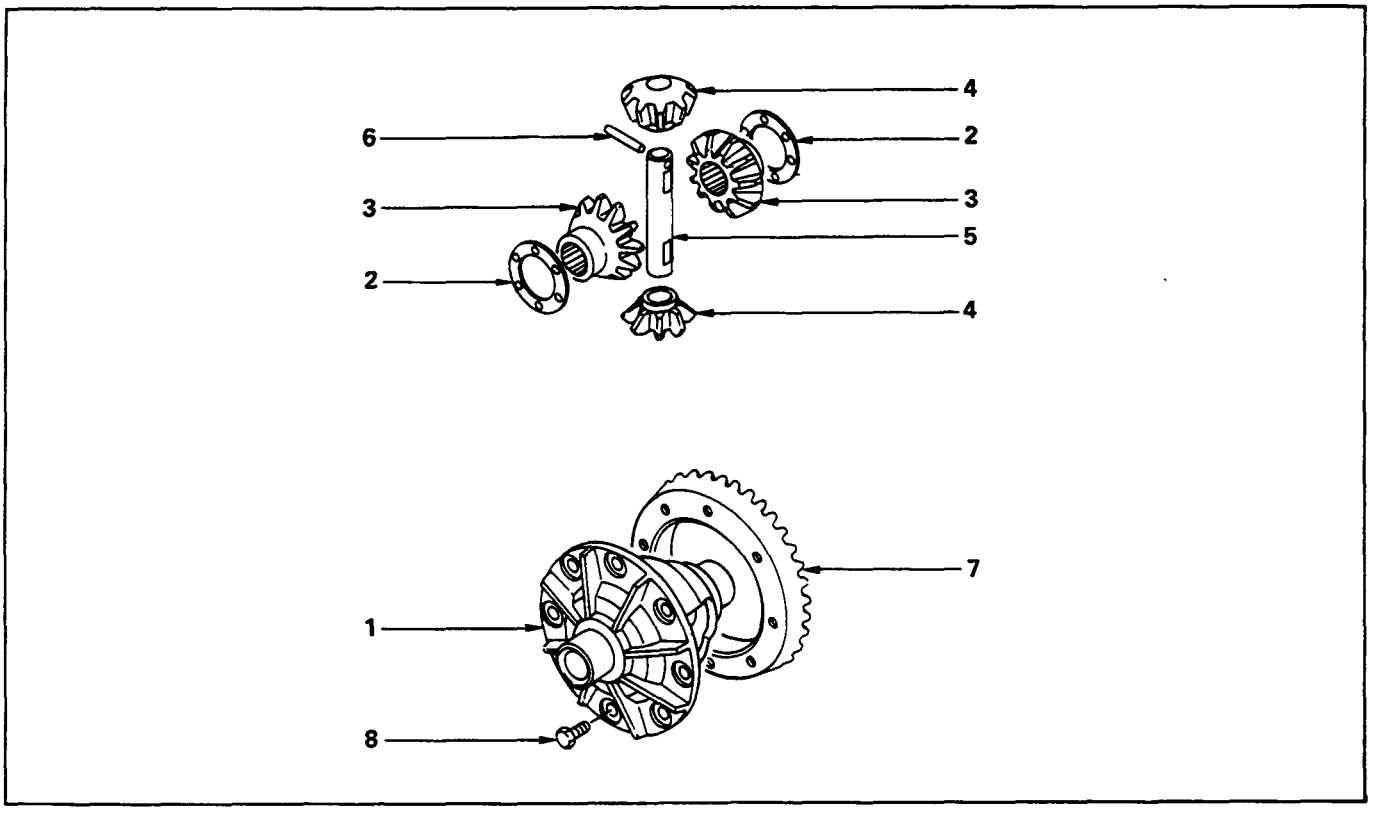

Reassembly Steps

1. Differential cage
2. Thrust washer
3. Side gear
▲ 4. Pinion gear
▲ 5. Cross pin
▲ 6. Lock pin
▲ 7. Ring gear
▲ 8. Bolt

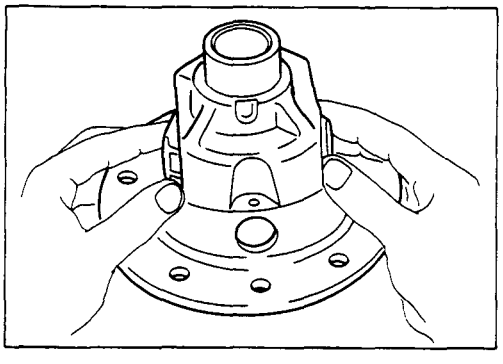

Important Operations

4. Pinion Gear

Install the pinion gear by engaging it with the side gears while turning both pinion gears simultaneously in the same direction.

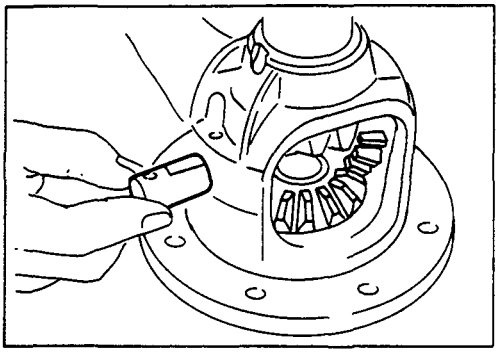

5. Cross Pin

(1) Be sure to install the cross pin so that it is in alignment with the lock pin hole in the differential cage.

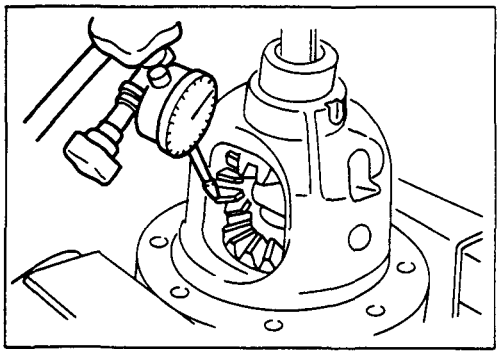

(2) Adjust the backlash between the side gear and the pinion gear.

mm(in)

Backlash	0.03 — 0.08 (0.001 — 0.003)

Thickness of thrust washers available

mm(in)

167 mm	1.05, 1.15, 1.25 (0.041, 0.043, 0.049)
194 mm	1.00, 1.05, 1.10 (0.039, 0.041, 0.043)

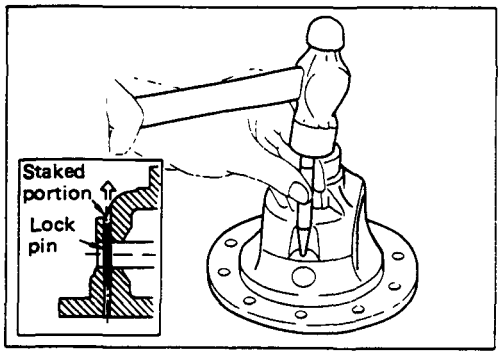

6. Lock Pin

After lock pin installation, stake the cage to prevent discharge of the lock pin.

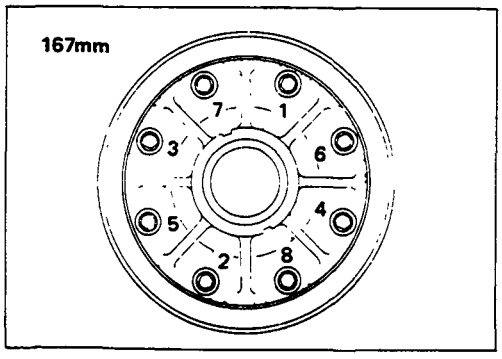

7. Ring Gear

When installing the ring gear, apply LOCTITE 271 or equivalent to the threaded hole and bolt.

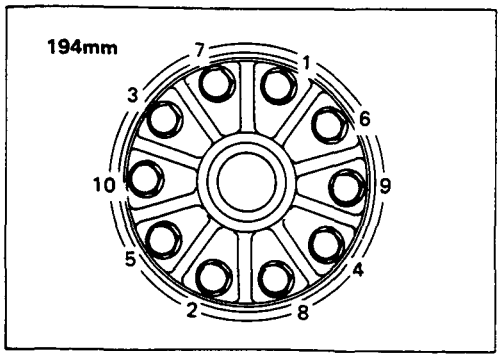

8. Bolt

Tighten the bolts in diagonal sequence as illustrated.

Bolt Torque	kg·m(lb.ft/N·m)
167 mm	8 ± 1 (57.9 ± 7.2/ 78.5 ± 9.8)
194 mm	11 ± 1 (79.6 ± 7.2/107.9 ± 9.8)

Note:

Discard used bolts and install new ones.

For 167 mm

MAJOR COMPONENT

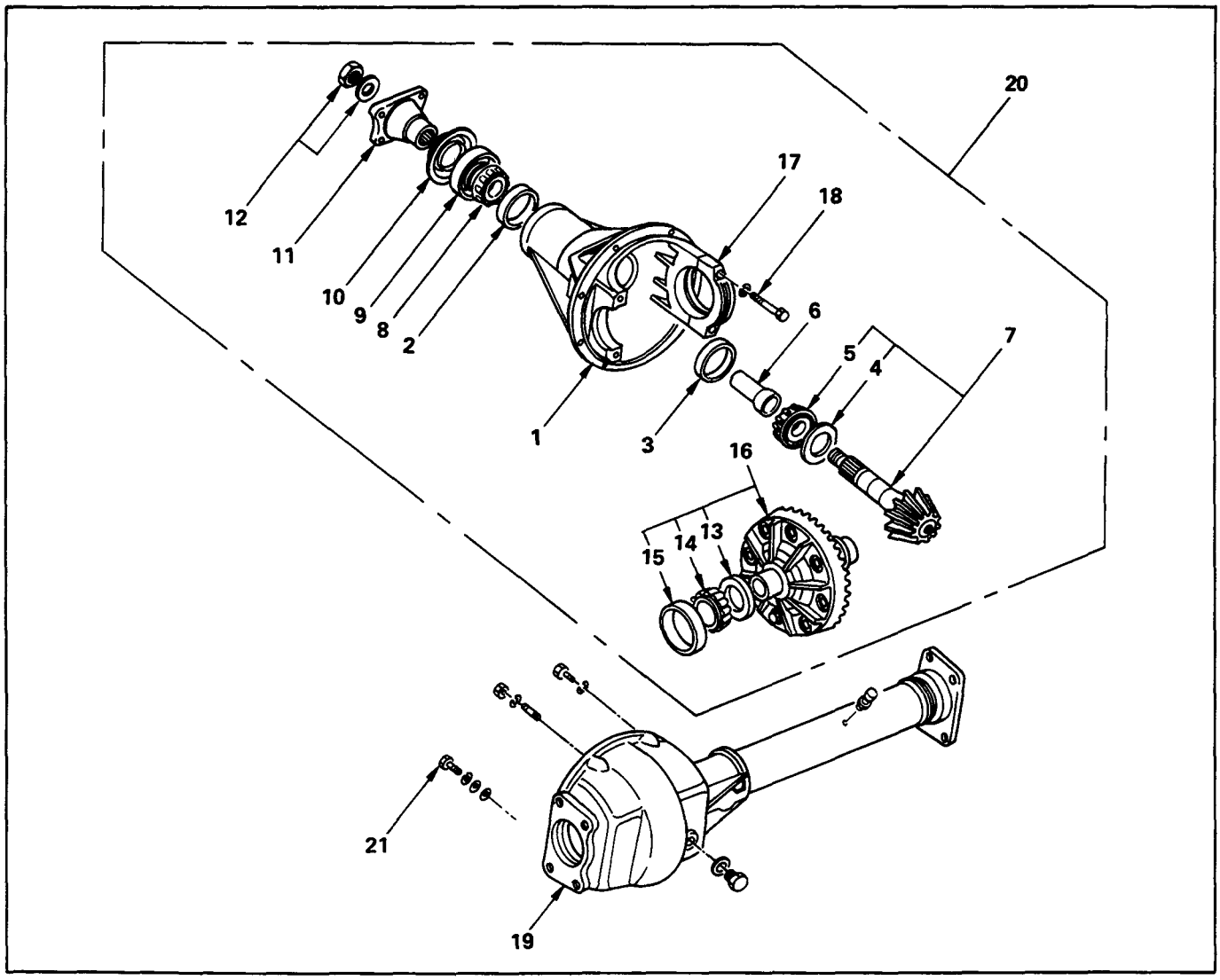

Reassembly Steps

1. Diff. carrier
▲ 2. Outer bearing outer race
▲ 3. Inner bearing outer race
▲ 4. Adjust shim
▲ 5. Inner bearing
▲ 6. Collapsible spacer
7. Pinion gear
8. Outer bearing
▲ 9. Oil seal
10. Dust cover
11. Flange
▲ 12. Flange nut and washer
▲ 13. Adjust shim
▲ 14. Side bearing
15. Bearing outer race
16. Diff. cage assembly
▲ 17. Bearing cap
▲ 18. Bolt
19. Axle case
▲ 20. Differential assembly
21. Bolt

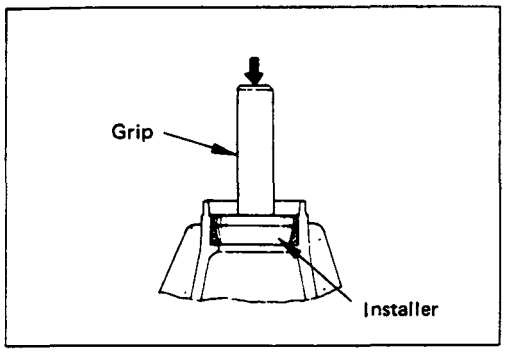

Important Operations

2. Outer Bearing Outer Race

Installer : 5-8522-0048-0 (167 mm)
(J-29038)
9-8522-1141-0 (194 mm)
(J-24256)
Grip : 5-8840-0007-0
(J-8092)

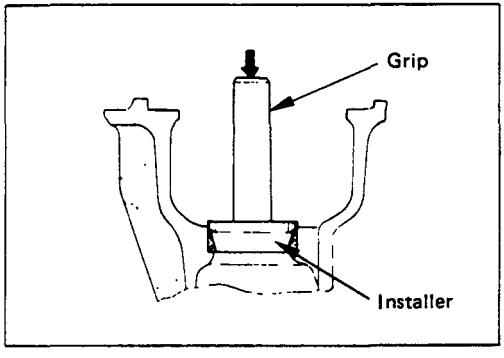

3. Inner Bearing Outer Race

Installer : 5-8522-0049-0 (167 mm)
(J-29039)
9-8522-1274-0 (194 mm)
(J-24252)
Grip : 5-8840-0007-0
(J-8092)

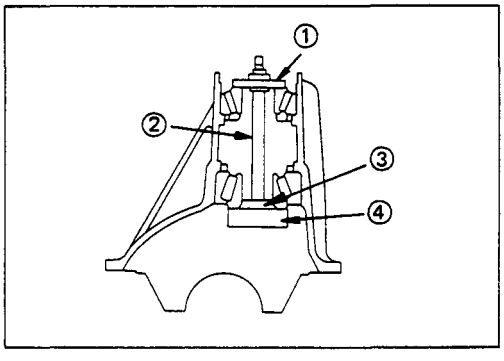

4. Adjust Shim

Adjustment of drive pinion mounting distance

(1) Apply gear oil to the inner and outer drive pinion bearing.
Clean the pinion setting gage set.
Then install the gage set together with the inner and outer bearings.

For 167 mm

① Pilot : 5-8840-2092-0
(J-23597-28)
② Nut and bolt : 5-8840-0127-0
(J-21777-43)
③ Rear pilot : 5-8840-2091-0
(J-23597-27)
④ Gage plate : 5-8840-2090-0
(J-23597-26)

For 194 mm

① Pilot : 5-8840-2085-0
(J-21777-42)
② Nut and bolt : 5-8840-2089-0
(J-23597-9)
④ Gage plate : 5-8840-2087-0
(J-23597-7)

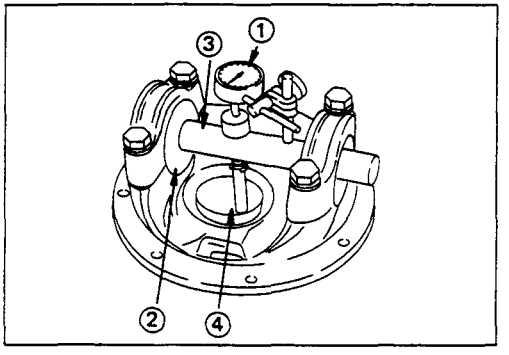

Tighten the nut to the specified torque.

kg·cm(lb.in/N·m)

New bearing	23 (20/2.26)
Used bearing	10 — 12 (8.7 — 10.4/0.98 — 1.18)

(2) Clean the side bearing bores. Install the dial indicator with the discs and Arbor. Install and tighten the bearing caps to the specified torque.

Torque kg·m(lb.ft/N·m)

167 mm	7.0 ± 1.0 (50.6 ± 7.2/68.7 ± 9.8)
194 mm	10.0 ± 1.0 (72.3 ± 7.2/98.1 ± 9.8)

For 167 mm

① Dial indicator : 5-8840-0126-0 (J-8001)
② Disc (2 pcs.) : 5-8840-2086-0 (J-23597-4)
③ Arbor : 5-8840-0128-0 (J-23597-1)
④ Gage plate : 5-8840-2090-0 (J-23597-26)

For 194 mm

① Dial indicator : 5-8840-0126-0 (J-8001)
② Disc (2 pcs.) : 5-8840-2088-0 (J-23597-8)
③ Arbor : 5-8840-0128-0 (J-23597-1)
④ Gage plate : 5-8840-2087-0 (J-23597-7)

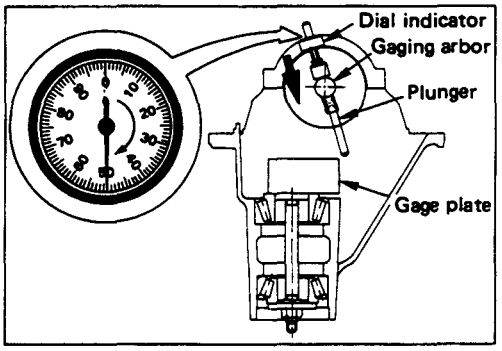

(3) Set the dial indicator to "0". Place it on the mounting post of the gaging arbor with the contact button touching the indicator pad. Force the dial indicator downward until the needle has made a half turn clockwise. Tighten down the dial indicator in this position.

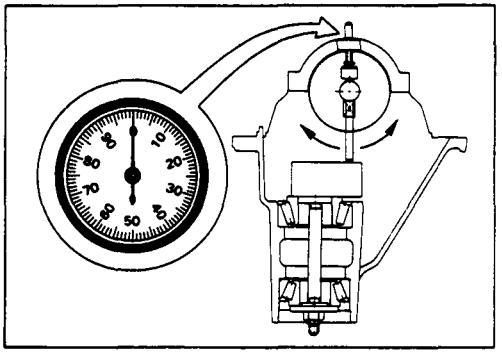

(4) Position the plunger on the gage plate. Move the gaging arbor slowly back and forth and locate the position at which the dial indicator shows the greatest deflection. At this point, once again set the dial indicator to "0".

Repeat the procedure to verify the "0" setting.

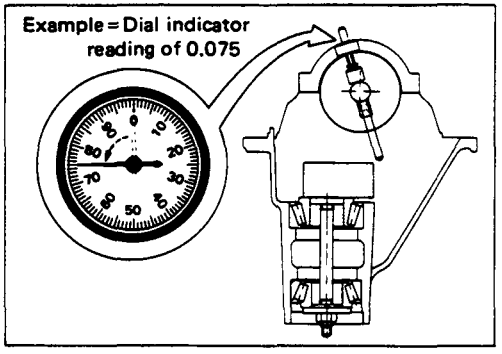

(5) After the ZERO setting is obtained, rotate the gaging arbor until the dial indicator rod does not touch the gaging plate.
Record the number the dial indicator needle points to.

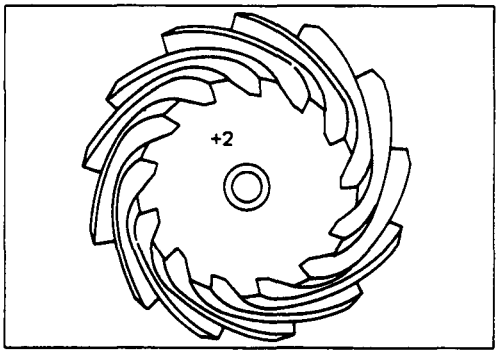

(6) Record the pinion depth code on the head of the drive pinion.

The number indicates a necessary change in the pinion mounting distance. A plus number indicates the need for a greater mounting distance (which can be achieved by decreasing the shim thickness). A minus number indicates the need for a smaller mounting distance (which can be achieved by increasing the shim thickness). If examination reveals pinion depth code "0", the pinion is "nominal".

(6) Select the shim using the chart;

For 167 mm

mm(in)

Pinion marking / Dial indicator reading (Inches)	+6	+4	+2	0	−2	−4	−6
0.052							1.39(0.0547)
0.053						1.39(0.0547)	1.41(0.0555)
0.054					1.39(0.0547)	1.41(0.0555)	1.43(0.0563)
0.055				1.39(0.0547)	1.41(0.0555)	1.43(0.0563)	1.45(0.0571)
0.056		1.39(0.0547)	1.41(0.0555)	1.43(0.0563)	1.45(0.0571)	1.47(0.0579)	1.49(0.0587)
0.057	1.39(0.0547)	1.41(0.0555)	1.43(0.0563)	1.45(0.0571)	1.47(0.0579)	1.49(0.0587)	1.51(0.0594)
0.058	1.41(0.0555)	1.43(0.0563)	1.45(0.0571)	1.47(0.0579)	1.49(0.0587)	1.51(0.0594)	1.53(0.0602)
0.059	1.43(0.0563)	1.45(0.0571)	1.47(0.0579)	1.49(0.0587)	1.51(0.0594)	1.53(0.0602)	1.55(0.0610)
0.060	1.47(0.0579)	1.49(0.0587)	1.51(0.0594)	1.53(0.0602)	1.55(0.0610)	1.57(0.0618)	1.59(0.0626)
0.061	1.49(0.0587)	1.51(0.0594)	1.53(0.0602)	1.55(0.0610)	1.57(0.0618)	1.59(0.0626)	1.61(0.0634)
0.062	1.51(0.0594)	1.53(0.0602)	1.55(0.0610)	1.57(0.0618)	1.59(0.0626)	1.61(0.0634)	1.63(0.0642)
0.063	1.55(0.0610)	1.57(0.0618)	1.59(0.0626)	1.61(0.0634)	1.63(0.0642)	1.65(0.0650)	1.67(0.0657)
0.064	1.57(0.0618)	1.59(0.0626)	1.61(0.0634)	1.63(0.0642)	1.65(0.0650)	1.67(0.0657)	1.69(0.0665)
0.065	1.59(0.0626)	1.61(0.0634)	1.63(0.0642)	1.65(0.0650)	1.67(0.0657)	1.69(0.0665)	1.71(0.0673)
0.066	1.61(0.0634)	1.63(0.0642)	1.65(0.0650)	1.67(0.0657)	1.69(0.0665)	1.71(0.0673)	1.73(0.0681)
0.067	1.65(0.0650)	1.67(0.0657)	1.69(0.0665)	1.71(0.0673)	1.73(0.0681)	1.75(0.0689)	1.77(0.0697)
0.068	1.67(0.0657)	1.69(0.0665)	1.71(0.0673)	1.73(0.0681)	1.75(0.0689)	1.77(0.0697)	
0.069	1.69(0.0665)	1.71(0.0673)	1.73(0.0681)	1.75(0.0689)	1.77(0.0697)		
0.070	1.71(0.0673)	1.73(0.0681)	1.75(0.0689)	1.77(0.0697)			
0.071	1.75(0.0689)	1.77(0.0697)					
0.072	1.77(0.0697)						

For 194 mm

mm(in)

Pinion marking / Dial indicator reading (Inches)	+10	+8	+6	+4	+2	0	−2	−4	−6	−8	−10
0.081											2.18(0.0858)
0.082										2.18(0.0858)	2.20(0.0866)
0.083									2.18(0.0858)	2.20(0.0866)	2.24(0.0882)
0.084								2.18(0.0858)	2.20(0.0866)	2.24(0.0882)	2.26(0.0890)
0.085							2.18(0.0858)	2.20(0.0866)	2.24(0.0882)	2.26(0.0890)	2.28(0.0898)
0.086						2.18(0.0858)	2.20(0.0866)	2.24(0.0882)	2.26(0.0890)	2.28(0.0898)	2.32(0.0914)
0.087					2.18(0.0858)	2.20(0.0866)	2.24(0.0882)	2.26(0.0890)	2.28(0.0898)	2.32(0.0914)	2.34(0.0921)
0.088				2.18(0.0858)	2.20(0.0866)	2.24(0.0882)	2.26(0.0890)	2.28(0.0898)	2.32(0.0914)	2.34(0.0921)	2.36(0.0929)
0.089			2.18(0.0858)	2.20(0.0866)	2.24(0.0882)	2.26(0.0890)	2.28(0.0898)	2.32(0.0914)	2.34(0.0921)	2.36(0.0929)	2.38(0.0937)
0.090		2.18(0.0858)	2.20(0.0866)	2.24(0.0882)	2.26(0.0890)	2.28(0.0898)	2.32(0.0914)	2.34(0.0921)	2.36(0.0929)	2.38(0.0937)	2.42(0.0953)
0.091	2.18(0.0858)	2.20(0.0866)	2.24(0.0882)	2.26(0.0890)	2.28(0.0898)	2.32(0.0914)	2.34(0.0921)	2.36(0.0929)	2.38(0.0937)	2.42(0.0953)	2.44(0.0961)
0.092	2.20(0.0866)	2.24(0.0882)	2.26(0.0890)	2.28(0.0898)	2.32(0.0914)	2.34(0.0921)	2.36(0.0929)	2.38(0.0937)	2.42(0.0953)	2.44(0.0961)	2.46(0.0969)
0.093	2.24(0.0882)	2.26(0.0890)	2.28(0.0898)	2.32(0.0914)	2.34(0.0921)	2.36(0.0929)	2.38(0.0937)	2.42(0.0953)	2.44(0.0961)	2.46(0.0969)	2.48(0.0977)
0.094	2.26(0.0890)	2.28(0.0898)	2.32(0.0914)	2.34(0.0921)	2.36(0.0929)	2.38(0.0937)	2.42(0.0953)	2.44(0.0961)	2.46(0.0969)	2.48(0.0977)	2.52(0.0992)
0.095	2.28(0.0898)	2.32(0.0914)	2.34(0.0921)	2.36(0.0929)	2.38(0.0937)	2.42(0.0953)	2.44(0.0961)	2.46(0.0969)	2.48(0.0977)	2.52(0.0992)	2.54(0.1000)
0.096	2.32(0.0914)	2.34(0.0921)	2.36(0.0929)	2.38(0.0937)	2.42(0.0953)	2.44(0.0961)	2.46(0.0969)	2.48(0.0977)	2.52(0.0992)	2.54(0.1000)	2.56(0.1008)
0.097	2.34(0.0921)	2.36(0.0929)	2.38(0.0937)	2.42(0.0953)	2.44(0.0961)	2.46(0.0969)	2.48(0.0977)	2.52(0.0992)	2.54(0.1000)	2.56(0.1008)	
0.098	2.36(0.0929)	2.38(0.0937)	2.42(0.0953)	2.44(0.0961)	2.46(0.0969)	2.48(0.0977)	2.52(0.0992)	2.54(0.1000)	2.56(0.1008)		
0.099	2.38(0.0937)	2.42(0.0953)	2.44(0.0961)	2.46(0.0969)	2.48(0.0977)	2.52(0.0992)	2.54(0.1000)	2.56(0.1008)			
0	2.42(0.0953)	2.44(0.0961)	2.46(0.0969)	2.48(0.0977)	2.52(0.0992)	2.54(0.1000)	2.56(0.1008)				
0.001	2.44(0.0961)	2.46(0.0969)	2.48(0.0977)	2.52(0.0992)	2.54(0.1000)	2.56(0.1008)					
0.002	2.46(0.0969)	2.48(0.0977)	2.52(0.0992)	2.54(0.1000)	2.56(0.1008)						
0.003	2.48(0.0977)	2.52(0.0992)	2.54(0.1000)	2.56(0.1008)							
0.004	2.52(0.0992)	2.54(0.1000)	2.56(0.1008)								
0.005	2.54(0.1000)	2.56(0.1008)									
0.006	2.56(0.1008)										

Note: When ordering shims, find the part number in the parts catalog by using the thickness of shims listed in the above table.

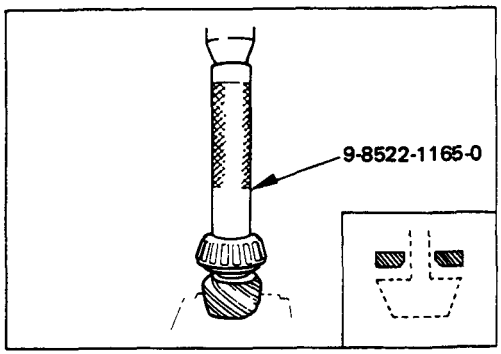

5. Inner Bearing

Place the shim on the drive pinion, with the chamfered side turned towards the pinion head then install the inner bearing on to the pinion using an installer and a press.

Installer : 9-8522-1165-0 (J-6133-01)

Note:

Do not apply pressure to the roller cage.
Apply pressure only to the inner race.

6. Collapsible Spacer

Discard the used collapsible spacer and install a new one.

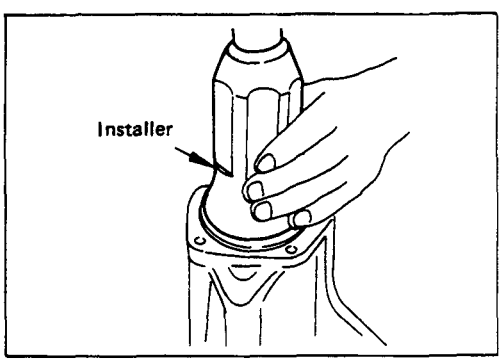

9. Oil Seal

Use oil seal installer to install a new oil seal that has been soaked in rear axle lubricant.

Installer : 5-8522-0046-0 (J-26234) (For 167 mm)
9-8522-1275-0 (J-24250) (For 194 mm)

Note:

Take care not to use a rear differential oil seal instead of the front differential oil seal.

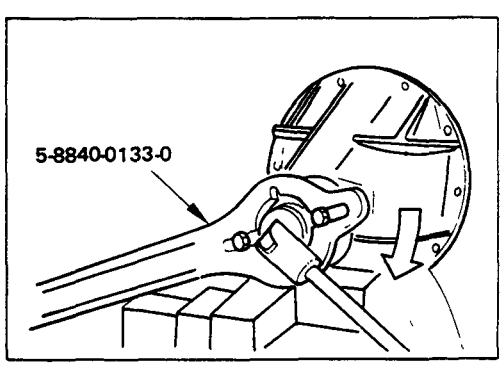

12. Flange Nut and Washer

For 194 mm

(1) Apply lubricant to the pinion threads.

(2) Tighten the nut to the specified torque using the pinion flange holder.

Pinion flange holder : 5-8840-0133-0
(J-8614-01)

Torque	kg·m(lb.ft/N·m)
18 — 28 (130 — 202/176.6 — 274.7)	

Discard used flange nut and install new one.

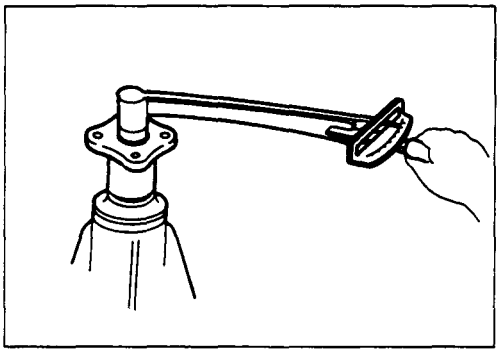

(3) Pinion bearing preload

(a) Measure the bearing preload by using a torque meter. Note the scale reading required to rotate the flange.

(b) Continue tightening until the specified starting torque is obtained.

Starting Torque	kg·cm(lb.in/N·m)
6.5 – 11.5 (5.7 – 9.9/0.63 – 1.13)	

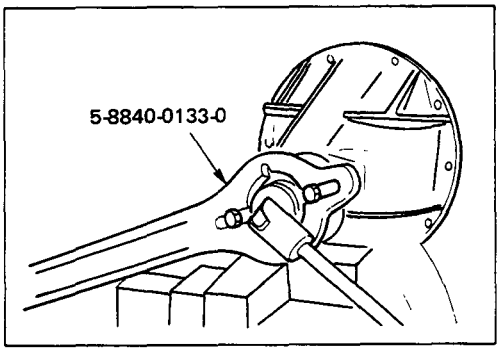

For 167 mm

(1) Apply lubricant to the pinion threads.

(2) Tighten the nut to the specified torque using the pinion flange holder.

Pinion flange holder : 5-8840-0133-0 (J-8614-01)

Torque	kg·m(lb.ft/N·m)
12 — 13 (87 — 94/117 — 127)	

Discard used flange nut and install new one.

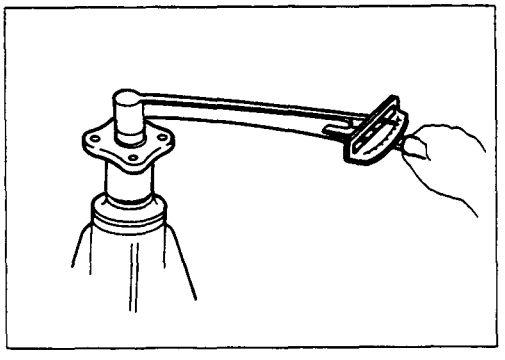

(3) Continue tightening until the specified starting torque is obtained.

Starting Torque	kg·cm(lb.in/N·m)
6 — 11 (5.2 — 9.5/0.59 — 1.0)	

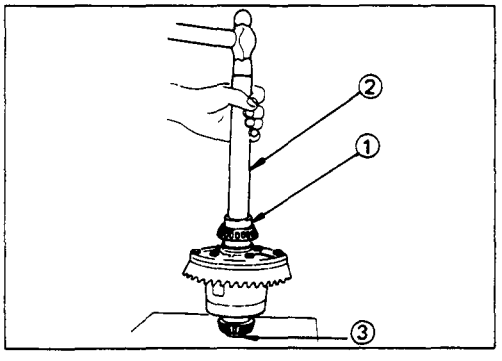

13. Adjust Shim

(1) Attach the side bearing to the differential assembly without shims. Support the opposite side using a pilot to prevent bearing damage.

For 167 mm

① Installer : 5-8840-0138-0 (J-29036)

② Drive handle : 5-8840-0007-0 (J-8092)

③ Pilot : 5-8521-0019-0

For 194 mm

① Installer : 9-8521-1164-0 (J-24244)

② Drive handle : 5-8840-0007-0 (J-8092)

③ Pilot : 9-8521-1743-0 (J-8107-2)

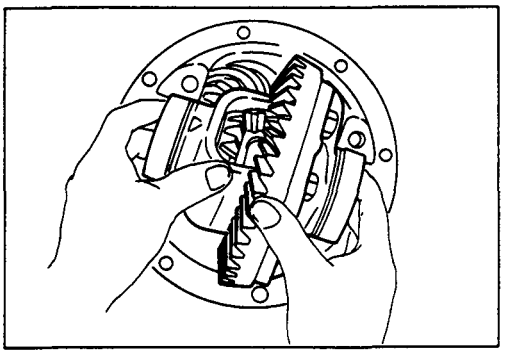

(2) Insert the differential cage assembly with bearing outer races into the side bearing bores of the carrier.

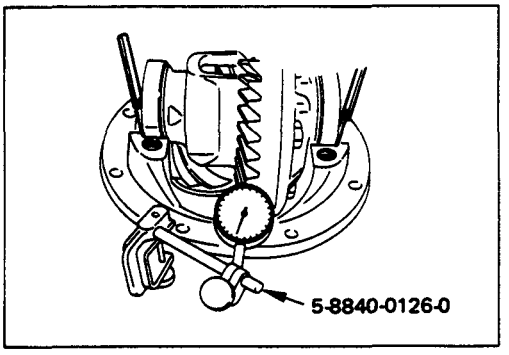

(3) Using two sets of feeler gauges, insert a feeler stock of sufficient thickness between each bearing outer race and the carrier to remove all end play. Make certain the feeler stock is pushed to the bottom of the bearing bores.
Mount the dial indicator on the carrier so that the indicator stem is at right angles to a tooth on the ring gear.

Dial indicator : 5-8840-0126-0
(J-8001)

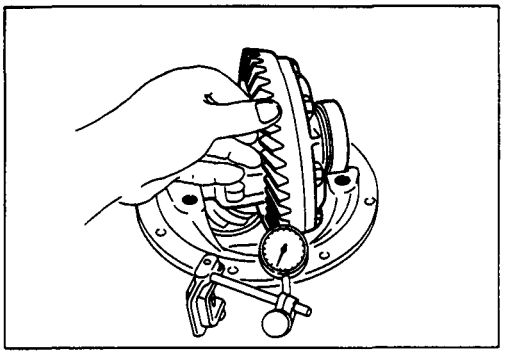

(4) Adjust feeler gauge thickness from side to side until ring gear backlash is in the specified range.

Backlash	mm(in)
0.13 — 0.18 (0.005 — 0.007)	

With zero end play and correct backlash established, remove the feeler gauge packs, determine the thickness of the shims required and add 0.05 mm (0.002 in) to each shim pack to provide side bearing preload. Always use new shims.

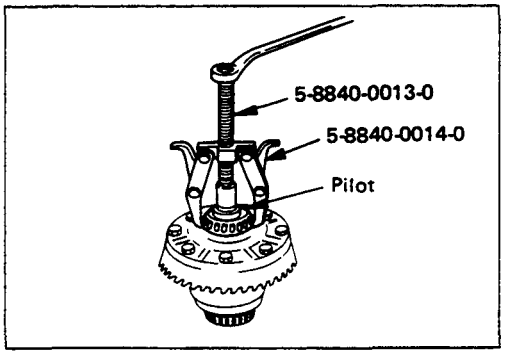

(5) Remove side bearing

Remover : 5-8840-0013-0
(J-22888)
5-8840-0014-0
(J-22888-30)

Pilot : 5-8521-0019-0 (167 mm)
9-8521-1743-0 (194 mm)
(J-8107-2)

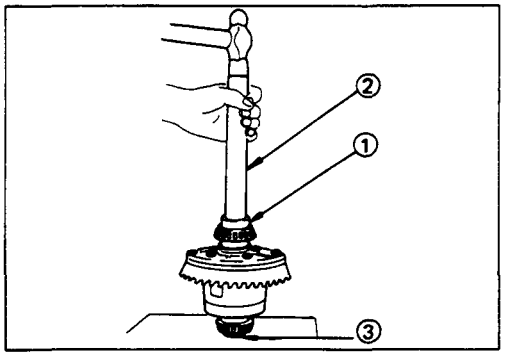

14. Side Bearing

Install the side bearings together with the selected shims.

For 167 mm

① Installer : 5-8840-0138-0 (J-29036)
② Drive handle : 5-8840-0007-0 (J-8092)
③ Pilot : 5-8521-0019-0

For 194 mm

① Installer : 9-8521-1164-0 (J-24244)
② Drive handle : 5-8840-0007-0 (J-8092)
③ Pilot : 9-8521-1743-0 (J-8107-2)

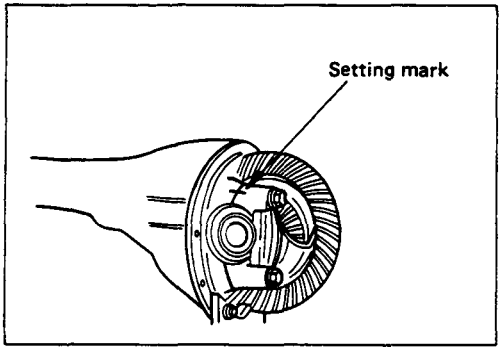

17. Bearing Cap

Align the setting marks applied at disassembly.

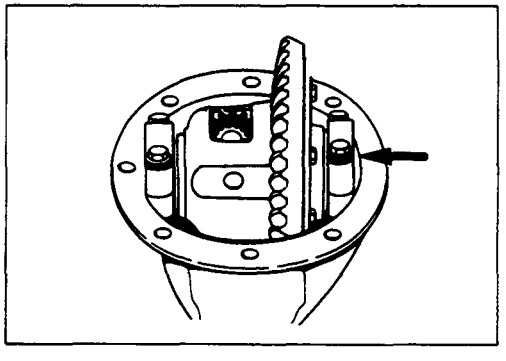

18. Bolt

Bolt Torque	kg·m(lb.ft/N·m)
167 mm	7 ± 1 (50.6 ± 7.2/68.7 ± 9.8)
194 mm	10 ± 1 (72.3 ± 7.2/98.1 ± 9.8)

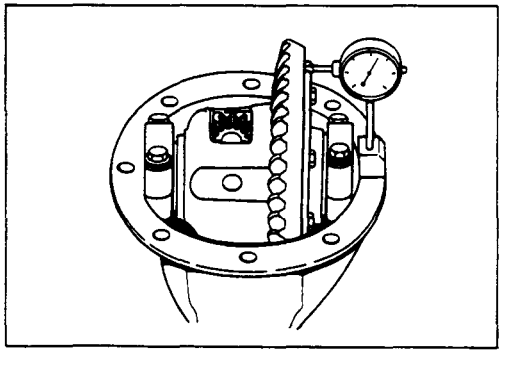

Measure the amount of run-out of the ring gear at its rear face.

mm(in)

Standard	Limit
0.02 (0.001)	0.05 (0.002)

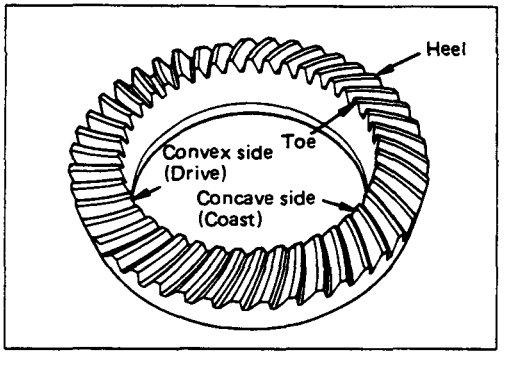

Gear Tooth Contact Pattern Check and Adjustment

Apply a thin coat of prussian blue or equivalent to the faces of the 7 — 8 teeth of the ring gear. Check the impression of contact on the ring gear teeth and make necessary adjustment as described below if the contact is abnormal.

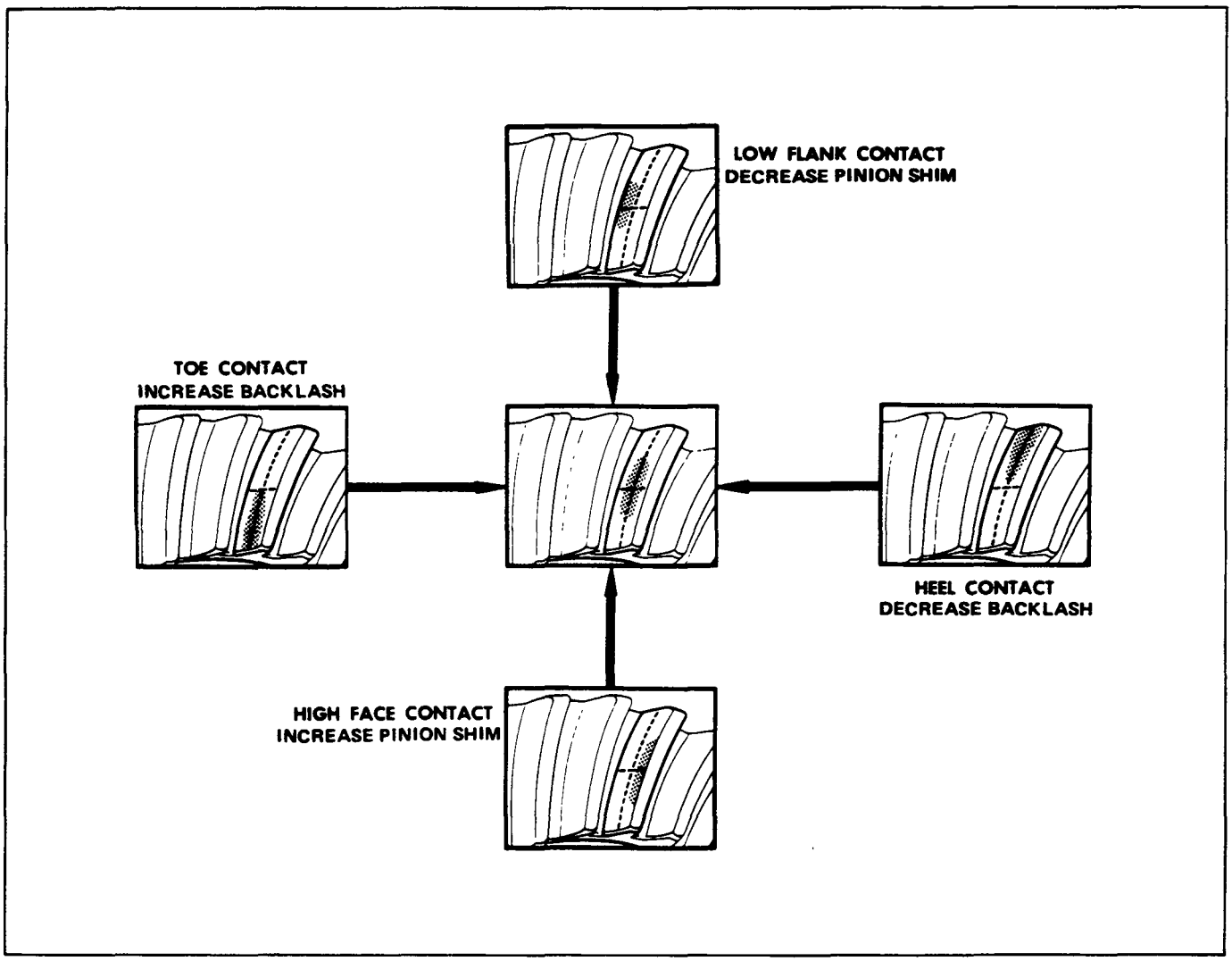

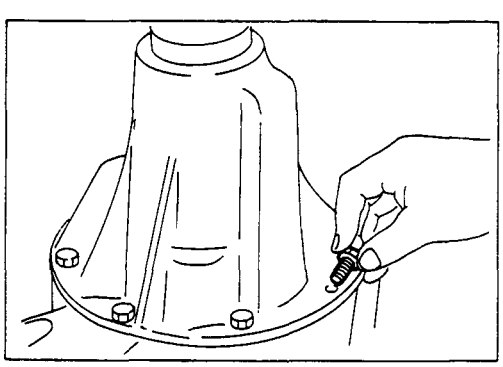

20. Differential Assembly

(1) Clean the faces of the front axle case and differential carrier.
Apply the recommended liquid gasket or its equivalent to the sealing side of the axle case and the carrier.

(2) Attach the differential case and the carrier assembly to the front axle case and tighten the nuts and bolts. The axle case bolt is used for drainage.

Torque	kg·m(lb.ft/N·m)
2.6 ± 0.5 (18.8 ± 3.6/25.5 ± 5)	

(3) Install the axle shaft assemblies as instructed earlier in this section under "Axle Shaft Replacement".

(4) Fill the axle case with hypoid gear lubricant, to just below the filler hole.

Lubricant capacity	liter (US/UK gal)
167 mm	1.0 (0.26/0.22)
194 mm	1.4 (0.37/0.31)

FRONT HUB AND DISC (4 x 2 model)

DISASSEMBLY

Refer to SECTION 3E "WHEEL AND TIRE" for wheel removal procedure.

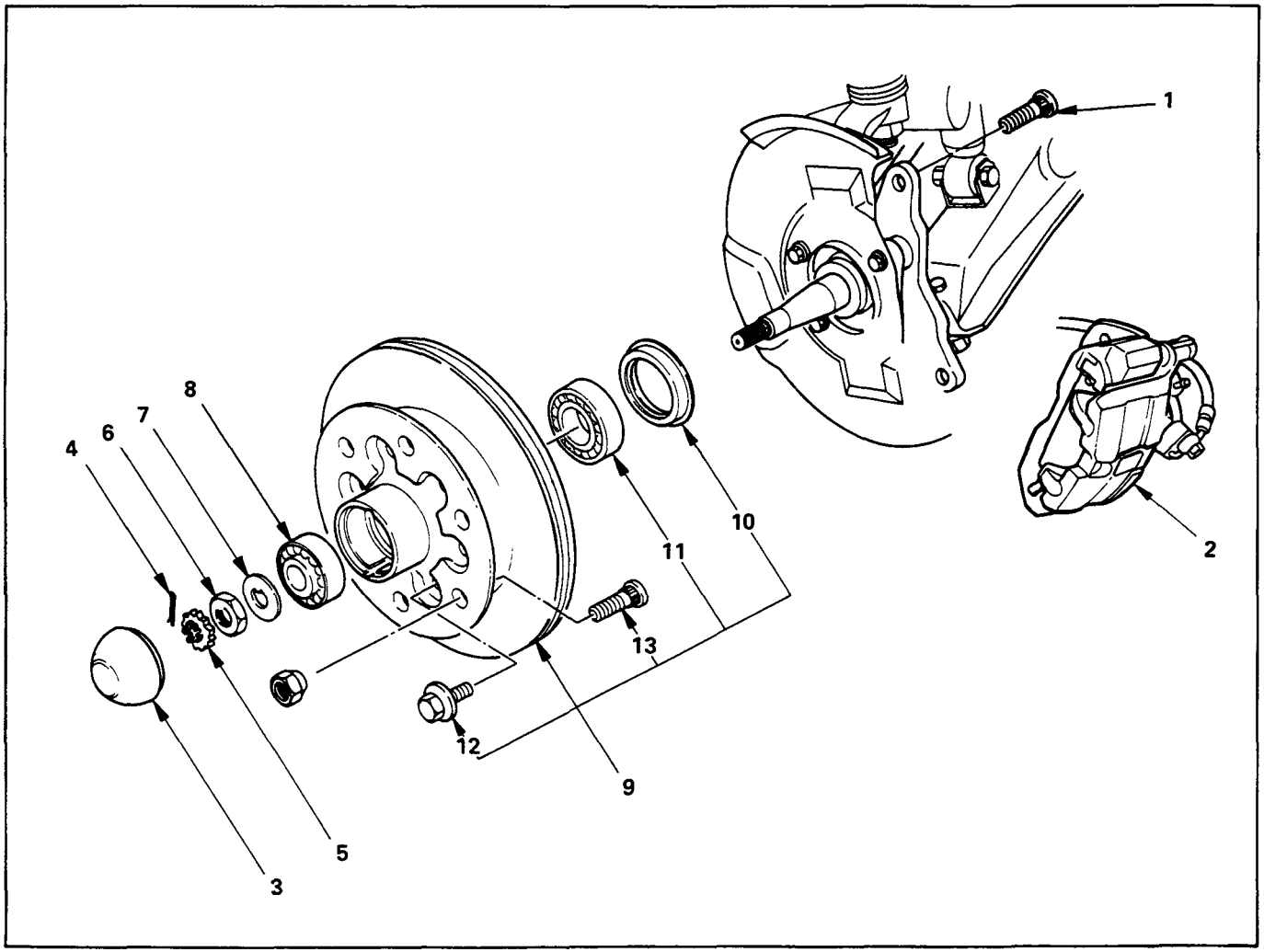

Disassembly Steps

1. Bolt
▲ 2. Brake caliper
▲ 3. Hub cap
4. Split pin
5. Nut retainer
6. Hub nut
7. Lock washer
8. Outer bearing
▲ 9. Hub and disc assembly
10. Oil seal
11. Inner bearing and outer race
▲ 12. Bolt
▲ 13. Wheel pin

Important Operations

Before removal, jack up the front of vehicle and support frame with jack stands.

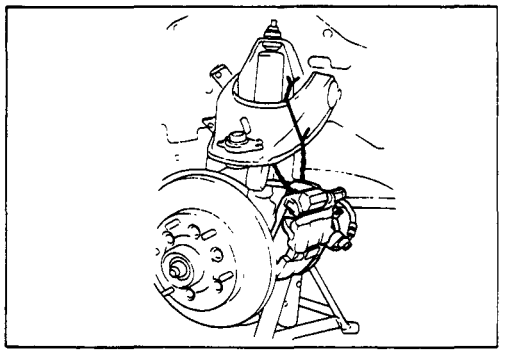

2. Brake Caliper

(1) Remove the two bolts from the rear side of the knuckle arm, then remove the brake caliper, with the brake hose attached.

(2) Use a wire etc., for attaching the brake caliper to the upper link.

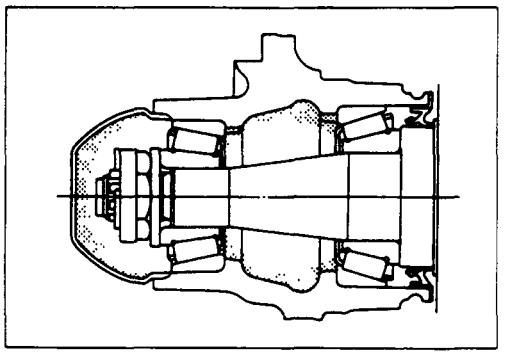

3. Hub Cap

When removing hub cap, exercise care so as not to scratch or distort hub fitting face.

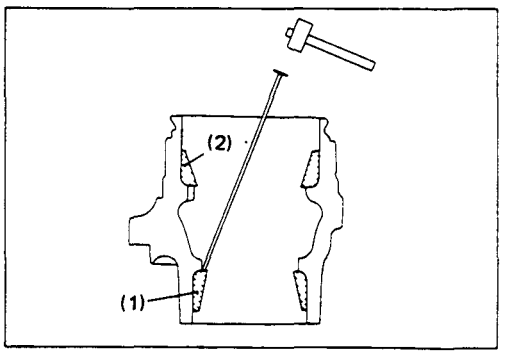

9. Hub and Disc Assembly

Using a brass bar to remove the outer bearing outer race (1), oil seal, inner bearing and inner bearing outer race (2) from the hub.

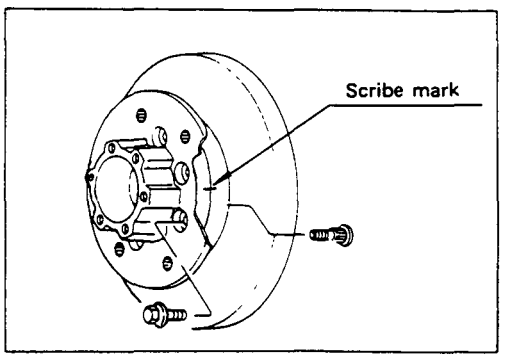

If necessary, replace the wheel pin in the following manner.

12. Bolt

13. Wheel Pin ; Front Hub

(1) Scribe mark on hub to disc before disassembly to insure proper assembly.

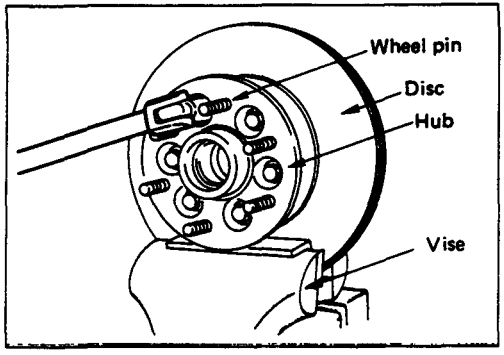

(2) Clamp hub and disc assembly in vise using protective pads and remove six (6) disc to hub retaining bolts.

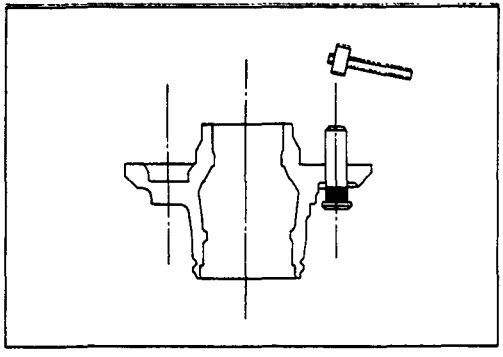

(3) Place hub on a suitable work surface and remove wheel studs, as required, using a hammer.

INSPECTION AND REPAIR

Make necessary correction or parts replacement if wear, damage or any other abnormal conditions are found through inspection.

- Hub
- Hub bearing
- Bearing outer race
- Disc
- Oil seal

Visual Check

Check the following parts for wear, damage or other abnormal conditions.

REASSEMBLY

Refer to SECTION 3E "WHEEL AND TIRE" for wheel installation procedure.

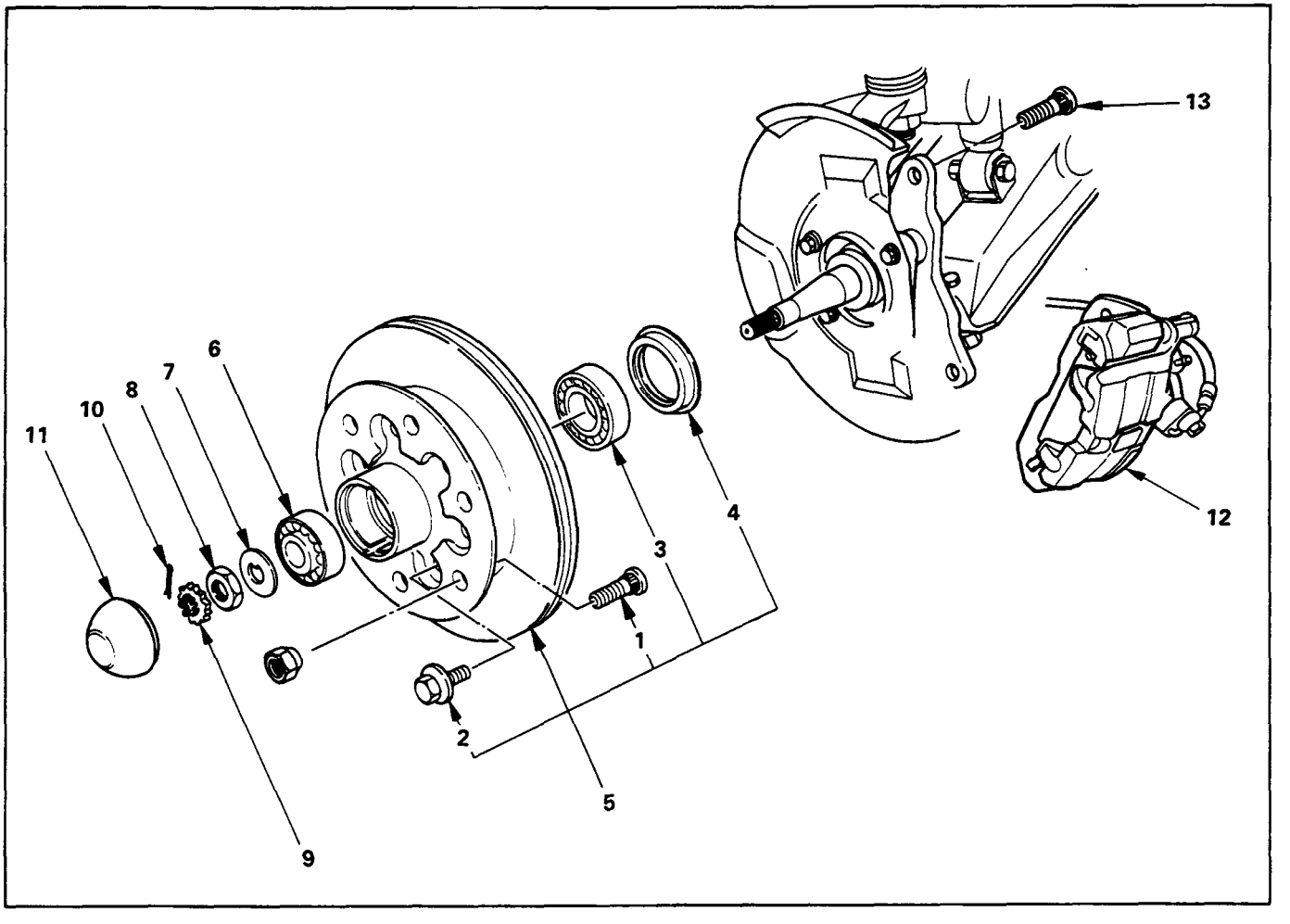

Reassembly steps

- ▲ 1. Wheel pin
- ▲ 2. Bolt
- ▲ 3. Inner bearing and outer race
- ▲ 4. Oil seal
- ▲ 5. Hub and disc assembly
- 6. Outer bearing
- 7. Lock washer
- ▲ 8. Hub nut
- 9. Nut retainer
- 10. Split pin
- ▲ 11. Hub cap
- 12. Brake caliper
- ▲ 13. Bolt

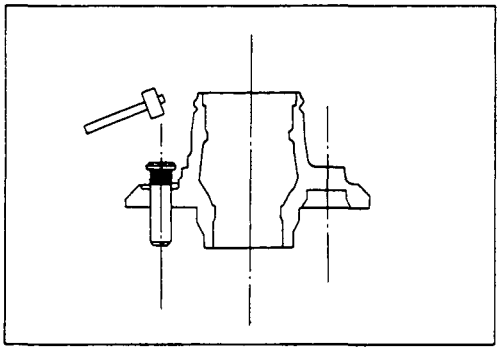

Important Operations

1. Wheel Pin

(1) Place hub on a wood workbench or a block of wood, approx. 6" by 6" to protect the wheel stud ends and threads.

(2) Install wheel stud using a hammer.
Be sure wheel stud is started squarely and seats completely.

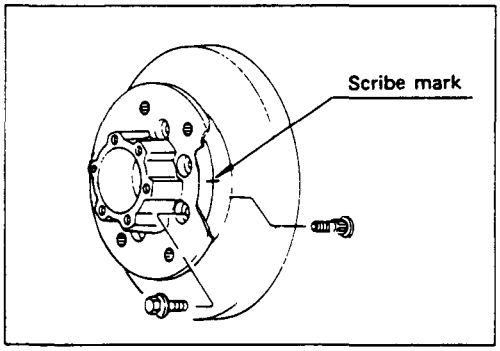

(3) Align index marks and install hub to disc.

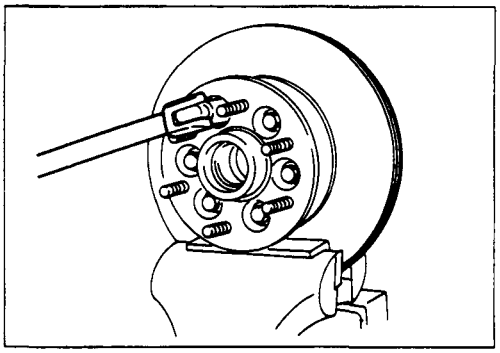

2. Bolt

Torque	kg·m(lb.ft/N·m)
10.5 ± 1 (75.9 ± 7.2/103 ± 5)	

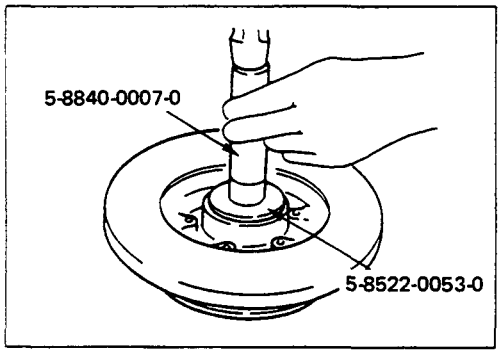

3. Inner Bearing and Outer Race

4. Oil Seal

▲ Outer Bearing Outer Race

(1) Install the bearing outer race by driving into the hub.

Installer (Outer) : 5-8822-0053-0 (J-29016)
Installer (Inner) : 5-8822-0054-0 (J-29015)
Drive handle : 5-8840-0007-0 (J-8092)

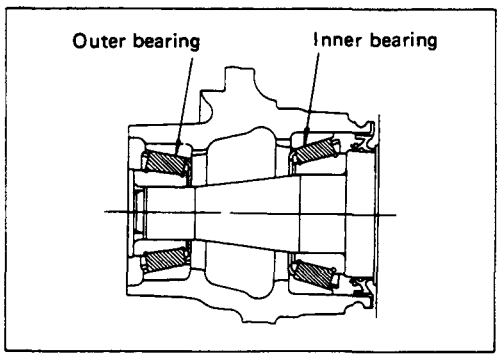

(2) Install the outer and inner bearing into the hub with fingers.

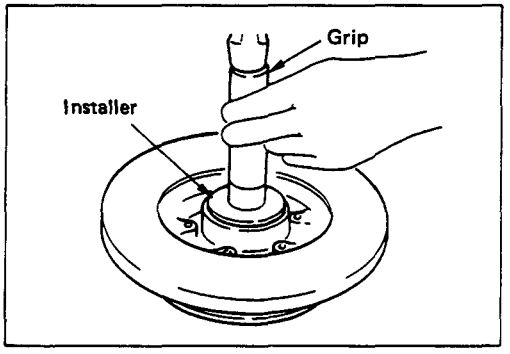

(3) Install oil seal using special tools.
Installer : 5-8522-0051-0
(J-33161)
Grip : 5-8840-0007-0
(J-8092)

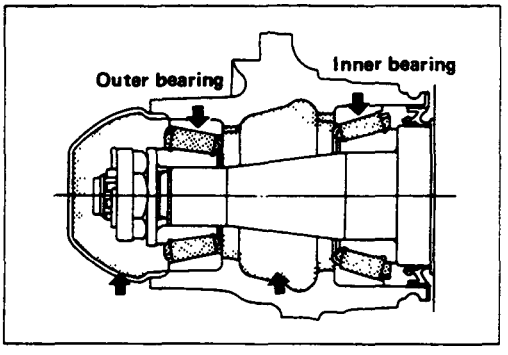

5. Hub and Disc Assembly

11. Hub Cap

Apply grease in the hub and hub cap.

	Amount g(oz)
Hub	50 (1.76)
Hub cap	20 (0.70)
Outer bearing	6.5 (0.23)
Inner bearing	12 (0.42)

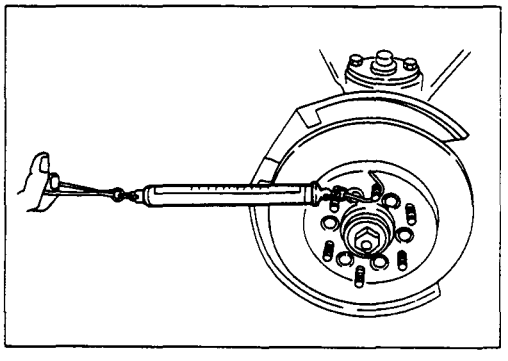

8. Hub nut

Adjustment of front wheel hub bearing preload

1. Tighten spindle nut to 3.0 kg·m (21.7 lb.ft/29.4 N·m) torque.
2. Turn the hub 2-3 turns and loosen the nut just enough so that it can be turned with the fingers.
3. Turn the nut all the way in with the fingers and check to be sure the hub has no free play.
4. Measure the bearing preload by pulling one of the wheel hub studs with a spring scale.
5. Tighten the spindle nut until specified bearing preload is obtained.

After reassembling, install the disc brake caliper assembly.

Bearing Preload	kg(lb)
New bearing and New oil seal	0.8—1.0 (1.8—2.2)
Reuse bearing and New oil seal	0.8—1.0 (1.8—2.2)

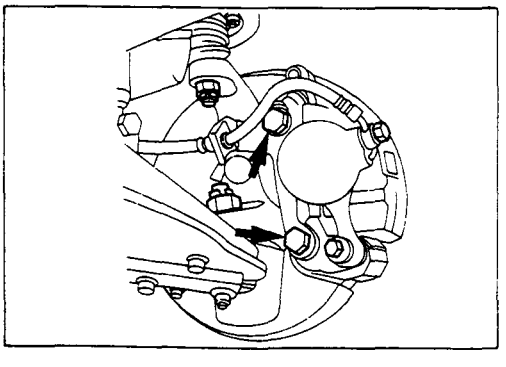

13. Bolt

Torque	kg·m(lb.ft/N·m)
15.8 ± 1.6 (114.3 ± 11.6/155 ± 15.7)	

FRONT HUB AND DISC (4×4 model)

DISASSEMBLY

Refer to SECTION 3E "WHEEL AND TIRE" for wheel removal procedure

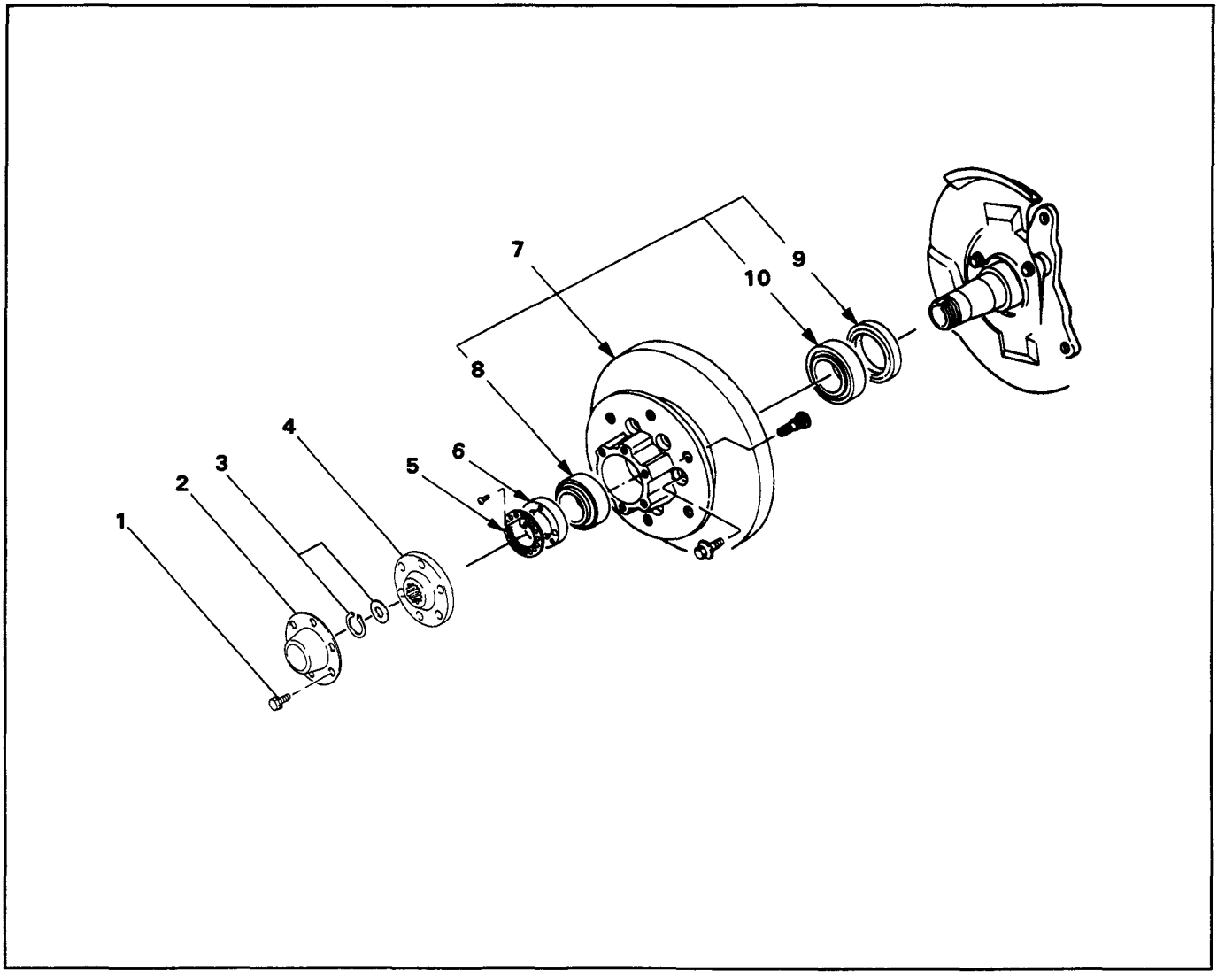

Disassembly steps

1. Bolt
2. Hub cap
3. Snap ring and shim
4. Flange
5. Lock washer
▲6. Hub nut
▲7. Hub and disc assembly
8. Outer bearing
9. Oil seal
10. Inner bearing

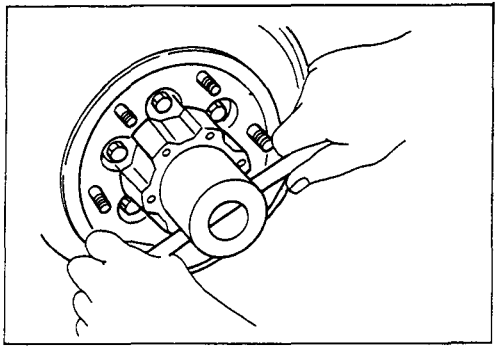

Refer to Section 5 "Brake" for disc brake caliper removal procedure.

Important operations

6. Hub nut

Whench ;5-8840-2117-0
(J-36827)

7. Hub and disc assembly

Before disassembly, remove the disc brake caliper assembly and hang it on the frame with wires.

INSPECTION AND REPAIR

Make necessary correction or parts replacement if wear, damage or any other abnormal conditions are found through inspection.

For inspection and servicing of disc caliper, and relative parts, refer to Section 5 "Service Brakes".

- Hub
- Hub bearing, oil seal
- Knuckle spindle
- Disc
- Caliper
- Free wheeling hub parts (Option)
- Clutch, knob, follower, inner, ring and spring

Visual Check

Inspect the following parts for wear, damage or other abnormal conditions.

REASSEMBLY

Refer to SECTION 3E "WHEEL AND TIRE" for wheel installation procedure

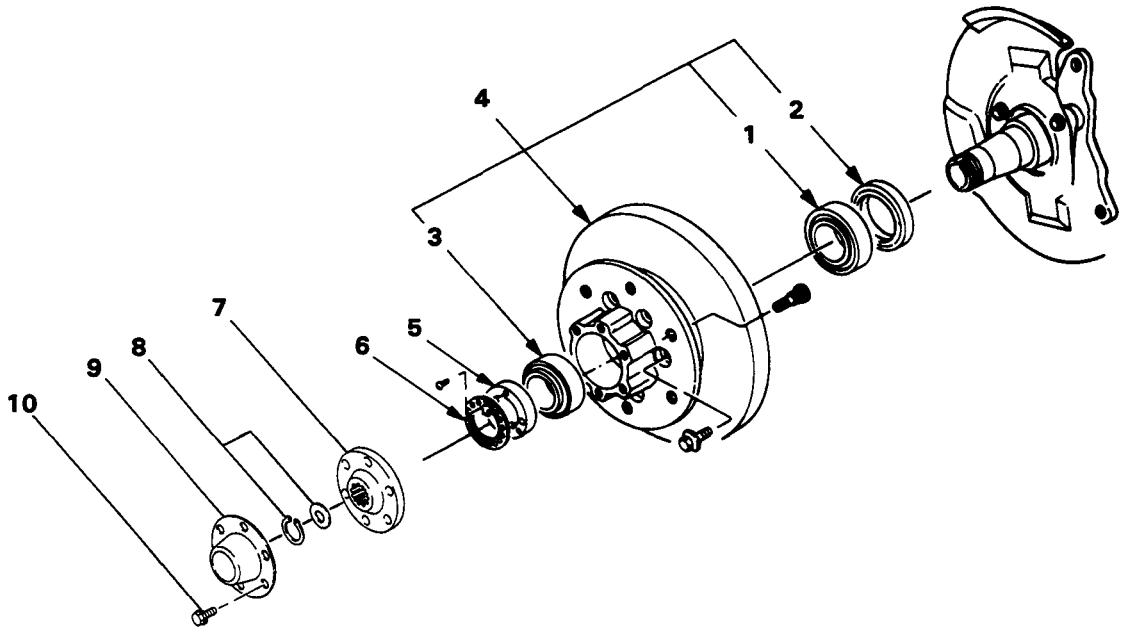

Reassembly steps

- ▲ 1. Inner bearing
- ▲ 2. Oil seal
- ▲ 3. Outer bearing
- ▲ 4. Hub and disc assembly
- ▲ 5. Hub nut
- ▲ 6. Lock washer
- 7. Flange
- ▲ 8. Snap ring and shim
- 9. Hub cap
- ▲10. Bolt

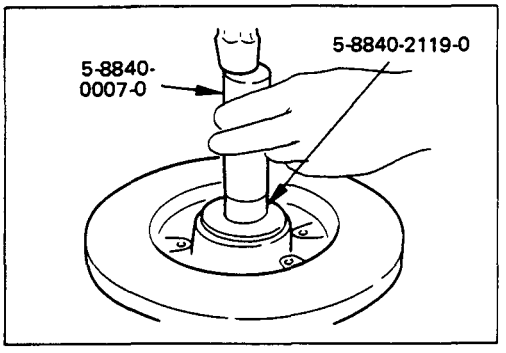

Important operations

1. Inner Bearing

Outer race ; outer bearing
Install the outer race by driving it into the hub.

Installer : 5-8840-2119-0
(J-36829)
Grip : 5-8840-0007-0
(J-8092)

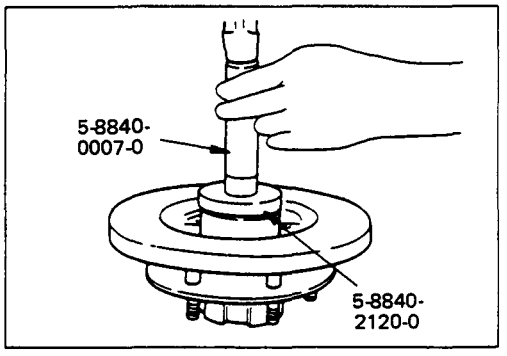

2. Oil Seal

Installer : 5-8840-2120-0
(J-36830)
Grip : 5-8840-0007-0
(J-8092)

Apply grease (Besco L-2 or equivalent) to the lip portion.

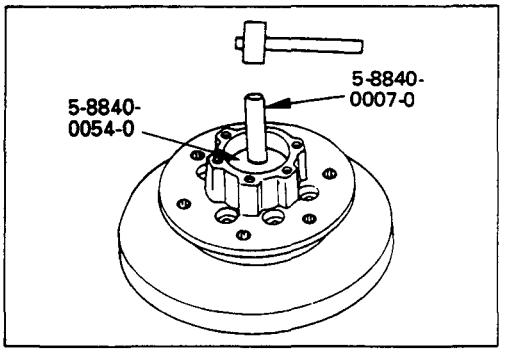

3. Outer bearing

Outer race ; outer bearing
Install the outer race by driving it into the hub.

Installer : 5-8840-0054-0
(J-29015)
Grip : 5-8840-0007-0
(J-8092)

4. Hub and Disc Assembly

(1) Apply grease in the hub.

(2) Apply grease (Besco L-2 or equivalent) to the outer and inner bearing.

g(oz)

Hub	35 (1.23)
Outer bearing	10 (0.35)
Inner bearing	15 (0.53)

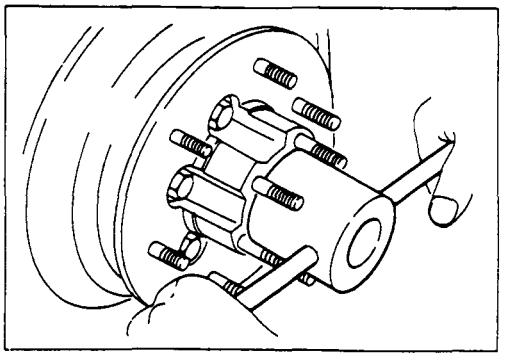

5. Hub Nut

(1) Turn the place where there is a chamfer in the tapped hole to the outer side, and attach the nut.

Wrench : 5-8840-2117-0
(J-36827)

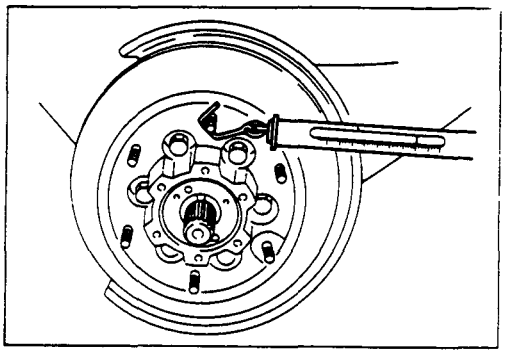

Preload Adjustment

Tighten the hub nut at 3 kg·m (21.716 lb.ft/29.4 N·m), then loosen the nut to the full.

Tighten the hub nut at the value given below, using a spring scale on the wheel pin.

Bearing Preload	kg(lb)
New bearing and New oil seal	2 —2.5 (4.4—5.5)
Used bearing and New oil seal	1.2—1.8 (2.6—4.0)

If the measured bearing preload is outside the specifications, adjust it by loosening or tightening the bearing nut.

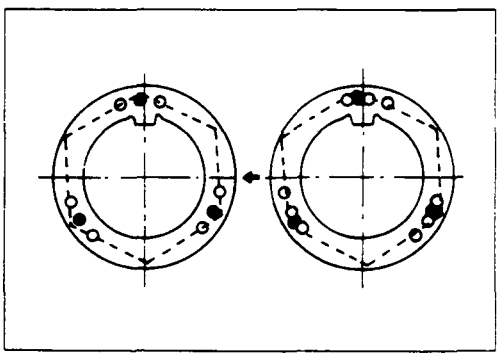

6. Lock Washer

Turn the side with larger diameter of the tapered bore to the vehicle outer side, and attach the washer.
If the bolt holes in the lock plate are not aligned with the corresponding holes in the nut, reverse the lock plate.
If the bolt holes are still out of alignment, turn in the nut just enough to obtain alignment. Screw is to be fastened tightly so its head may come lower than the surface of the washer.

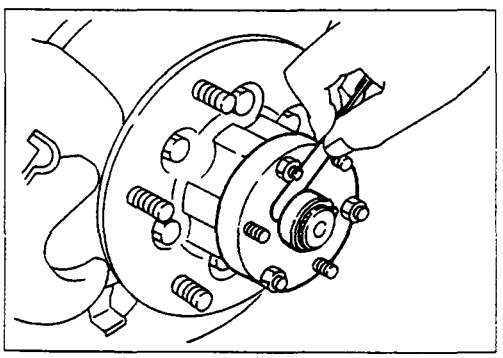

8. Snap ring, shims

Adjust the clearance between the collar and the snap ring.

Clearance mm(in.)	0—0.3 (0—0.01)

Adjust shims available

mm(in.)
0.2, 0.3, 0.5, 1.0 (0.008, 0.011, 0.020, 0.039)

10. Bolt

Torque kg·m(lb.ft/N·m)	1.0—1.4 (7—10/10—14)

FRONT HUB AND DISC (Automatic Locking Hub)

DISASSEMBLY

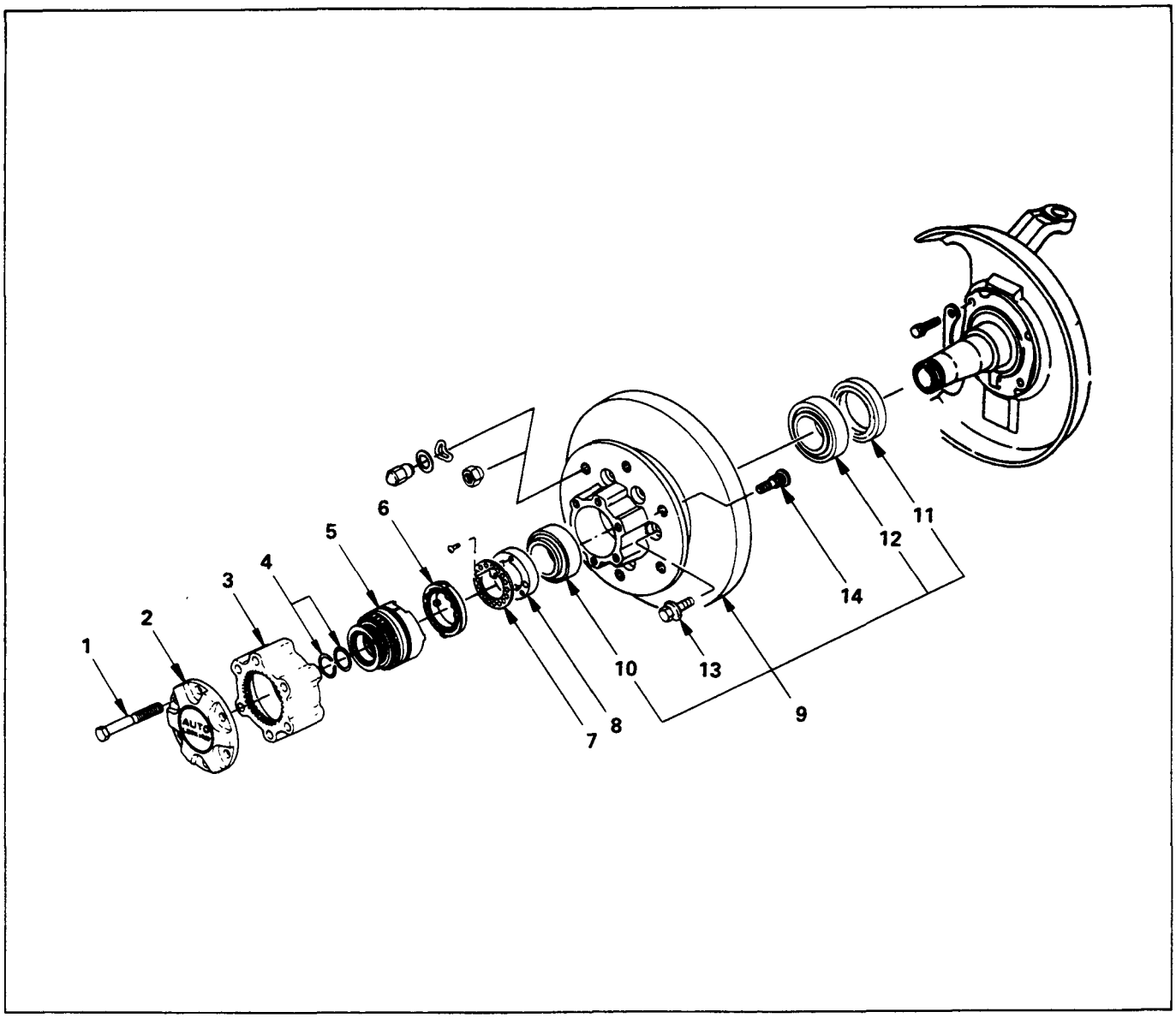

Disassembly Steps

- ▲ 1. Bolt
- 2. Hub cap
- 3. Housing assembly
- 4. Snap ring and shims
- 5. Drive clutch assembly
- 6. Inner cam
- 7. Lock washer
- ▲ 8. Hub nut
- ▲ 9. Hub and disc assembly
- ▲ 10. Outer bearing and outer race
- 11. Oil seal
- ▲ 12. Inner bearing and outer race
- ▲ 13. Bolt
- ▲ 14. Wheel pin

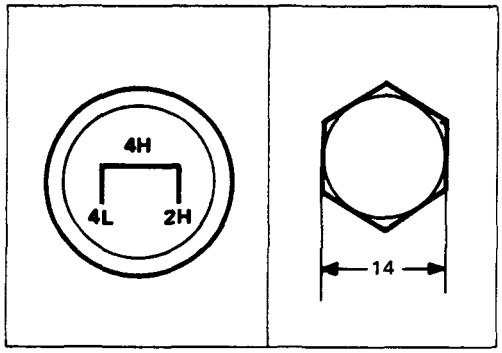

Important Operations

1. Bolt

Shift the transfer lever to the "2H" position and move the vehicle forward and rearward about one meter.
Remove the 14 mm hex bolts.

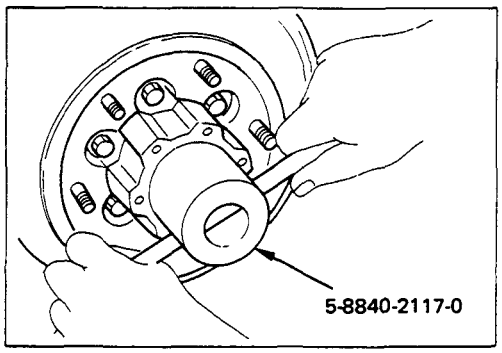

8. Hub Nut

Wrench : 5-8840-2117-0
(J-36827)

Refer to Section 5 "Brake" for disc brake caliper removal procedure.

9. Hub and Disc Assembly

Before disassembly, remove the disc brake caliper assembly and hang it on the frame with wires.

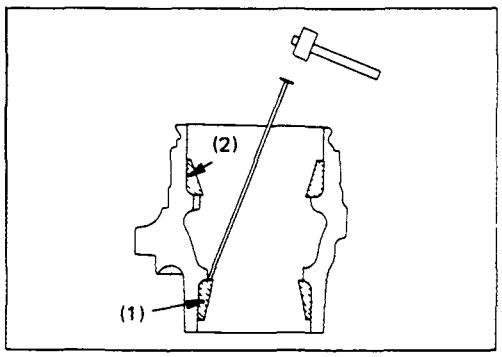

10. Outer Bearing and Outer Race

12. Inner Bearing and Outer Race

(1) Remove the outer bearing from the hub with fingers. The inner bearing will remain in the hub and may be removed after prying out the inner bearing lip seal assembly.

(2) Remove the outerrace by driving out the race from the hub with a brass drift inserted behind the race in the notches in the hubs.

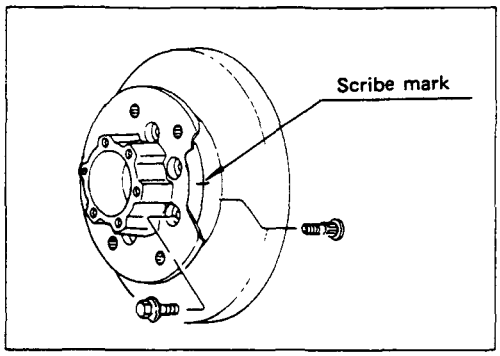

If necessary, replace the wheel pin in the following manner.

13. Bolt

(1) Apply a scribe mark to disc to hub.

(2) Clamp the hub and disc assembly in a vise using protective pads and remove the 6 disc to hub retaining bolts.

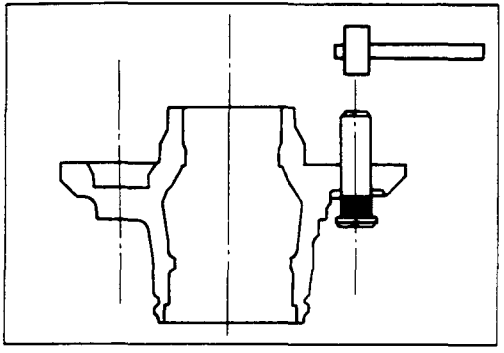

14. Wheel Pin

Place pins hub on a suitable work surface and remove the wheel studs, as required, using a hammer.

INSPECTION AND REPAIR

Make all necessary adjustments, repairs, and part replacements if wear, damage, or other problems are discovered during inspection.

For inspection and servicing of disc caliper, and relative parts, refer to Section 05 "Brakes".

- Hub
- Hub bearing, oil seal
- Knuckle spindle
- Disc
- Caliper
- Automatic locking hubs

Visual Check

Inspect the following parts for wear, damage, or other abnormal conditions.

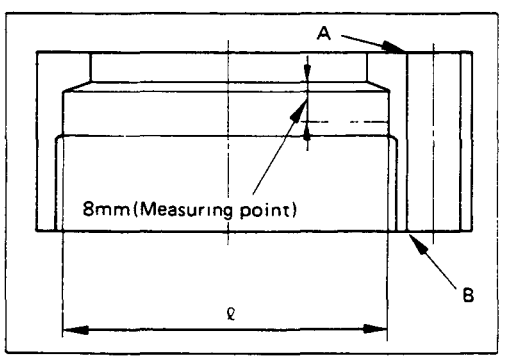

Inside Diameter of Housing

mm(in)

Standard	Limit
65.04 (2.561)	65.24 (2.568)

Inspect flange surface A and B for excessive wear.

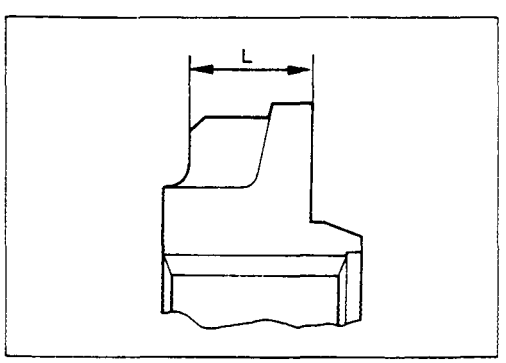

Drive Clutch Section Dimensions "L"

mm(in)

Standard	Limit
8.2 (0.323)	7.8 (0.307)

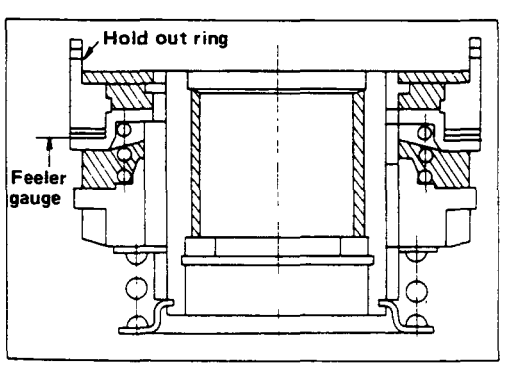

Holdout Ring Axial Play of the Drive Clutch Assembly

mm(in)

Standard	Limit
0.3 (0.012) or less	0.4 (0.016)

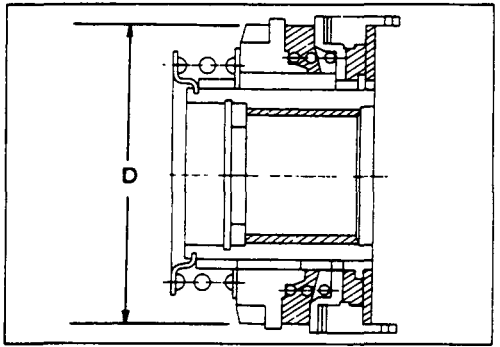

Outside Diameter of the Drive Clutch Assembly

mm(in)

Standard	Limit
64.75 (2.55)	64.55 (2.54)

REASSEMBLY

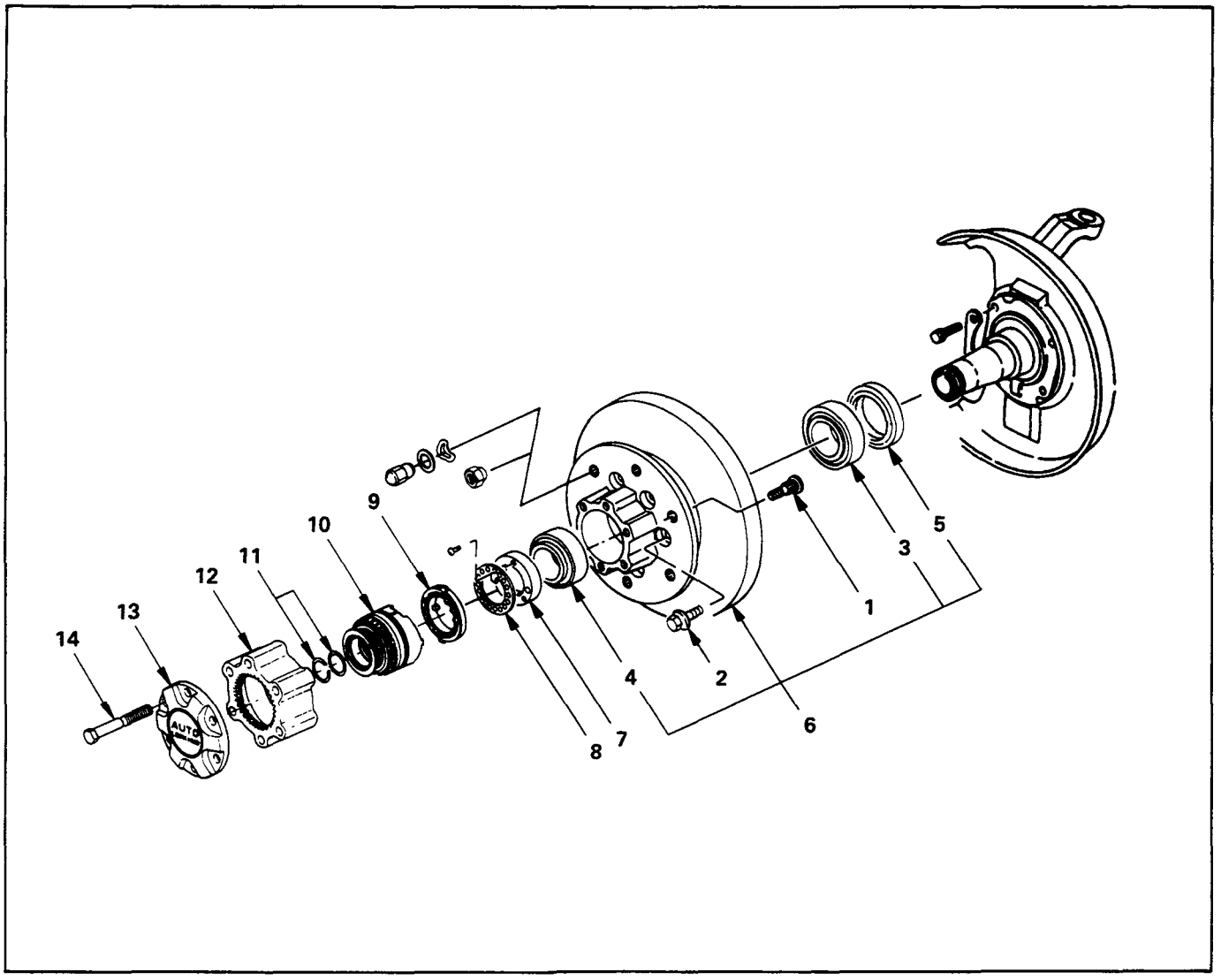

Reassembly Steps

- ▲ 1. Wheel pin
- ▲ 2. Bolt
- ▲ 3. Inner bearing and outer race
- ▲ 4. Outer bearing and outer race
- ▲ 5. Oil seal
- ▲ 6. Hub and disc assembly
- ▲ 7. Hub nut
- ▲ 8. Lock washer
- ▲ 9. Inner cam
- ▲ 10. Drive clutch assembly
- ▲ 11. Snap ring and shim
- ▲ 12. Housing assembly
- 13. Hub cap
- 14. Washer and bolt

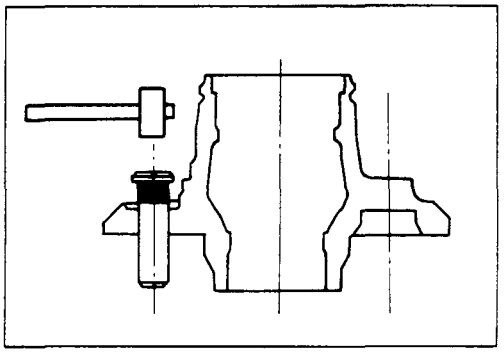

Important Operations

1. Wheel Pin

(1) Place the hub on a wood workbench or a block of wood approx 6″ by 6″ to protect the wheel stud ends and threads.

(2) Insert a wheel stud using a hammer.
Be sure the wheel stud is started squarely and seats completely.

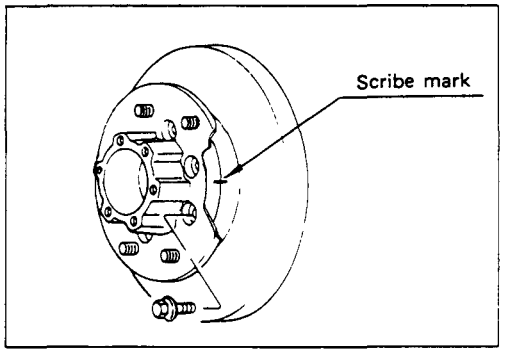

2. Bolt

Align scribe marks and attach the hub to the disc.

Torque	kg·m(lb.ft/N·m)
10.5 ± 1 (75.9 ± 7.2/103 ± 5)	

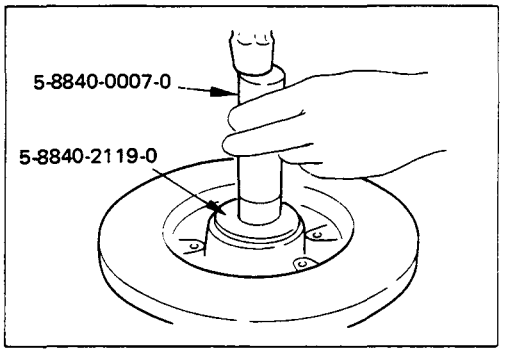

3. Inner Bearing and Outer Race

Outer race ; inner bearing

Install the outer race by driving it into the hub.

Installer : 5-8840-2119-0
(J-36829)
Grip : 5-8840-0007-0
(J-8092)

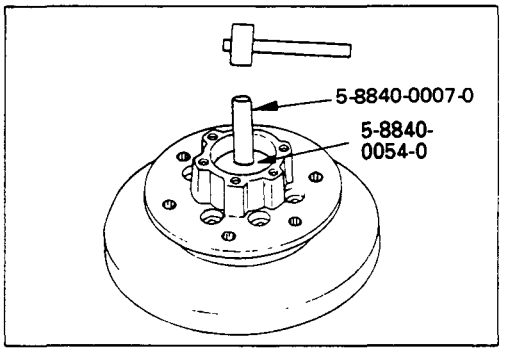

4. Outer Bearing and Outer Race

Outer race ; outer bearing

Install the outer race by driving it into the hub.

Installer : 5-8840-0054-0
(J-29015)
Grip : 5-8840-0007-0
(J-8092)

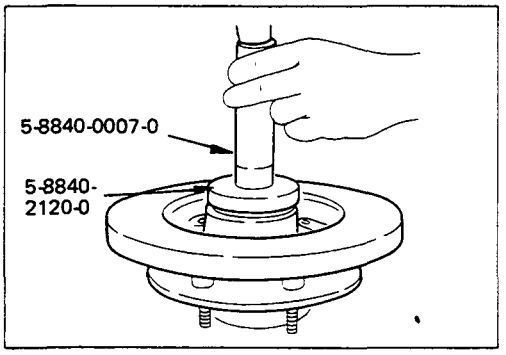

5. Oil Seal

Place the inner bearing onto the outer race in the hub and install a new oil seal and retaining ring.

Apply Besco L-2 or equivalent to the lip portion.

Installer : 5-8840-2120-0
(J-36830)
Grip : 5-8840-0007-0
(J-8092)

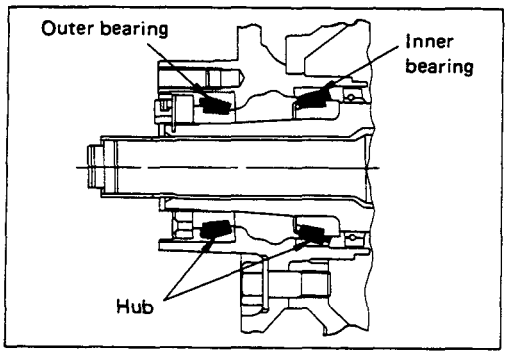

6. Hub and Disc Assembly

(1) Put grease in the hub.

(2) Apply Besco L-2 or equivalent to the outer and inner bearing.

	g(oz)
Hub	35 (1.23)
Outer bearing	10 (0.35)
Inner bearing	15 (0.53)

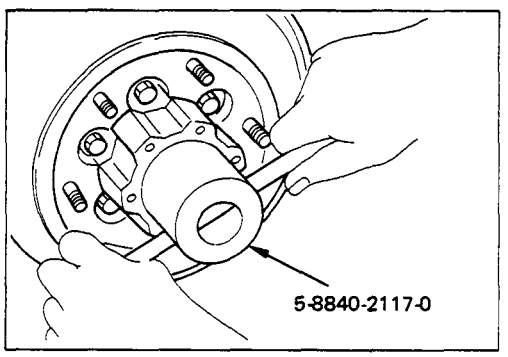

7. Hub Nut

Turn the place where there is a chamfer in the tapped hole to the outer side, and attach the nut.

Wrench : 5-8840-2117-0
(J-36827)

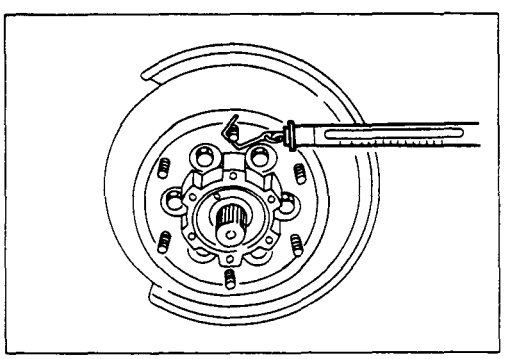

▲ Preload Adjustment

Tighten the hub nut at 3 kg·m (21.716 lb.ft/29.4 N·m), then loosen the nut to the full.

Tighten the hub nut at the value given below, using a spring scale on the wheel pin.

Bearing Preload	kg(lb)
New bearing and New oil seal	2 —2.5 (4.4—5.5)
Used bearing and New oil seal	1.2—1.8 (2.6—4.0)

If the measured bearing preload is outside the specifications, adjust it by loosening or tightening the bearing nut.

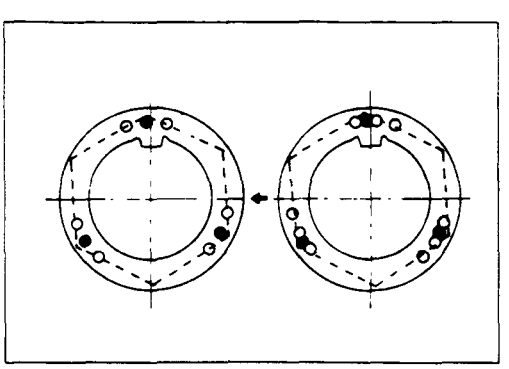

8. Lock Washer

Turn the side with larger diameter of the tapered bore to the vehicle outer side, and attach the washer.
If the bolt holes in the lock plate are not aligned with the corresponding holes in the nut, reverse the lock plate.
If the bolt holes are still out of alignment, turn in the nut just enough to obtain alignment. Screw is to be fastened tightly so its head may come lower than the surface of the washer.

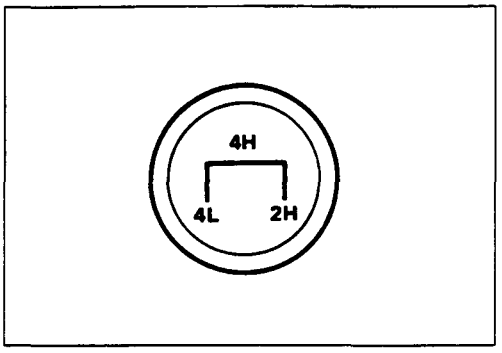

9. Inner Cam

(1) Before installation, shift the transfer lever to "2H" position.

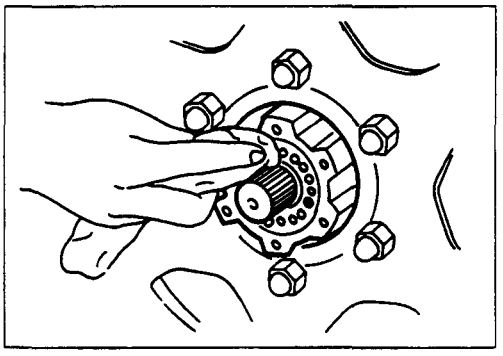

(2) Clean the flange surface of the hub, the thread holes, the surface of the lock washer and the spline portion of the axle shaft.

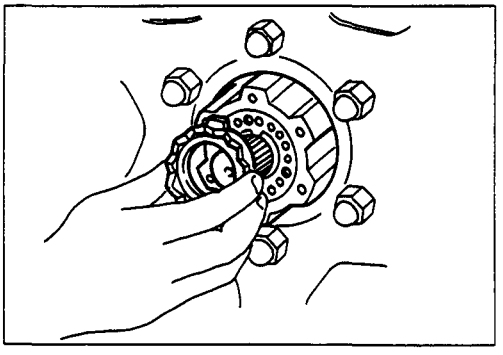

(3) Install the inner cam by aligning the key way of the inner cam with the groove of the knuckle.
Hit the inner cam lightly with plastic hammer or equivalent and make sure the inner cam is in contact with the lock washer.

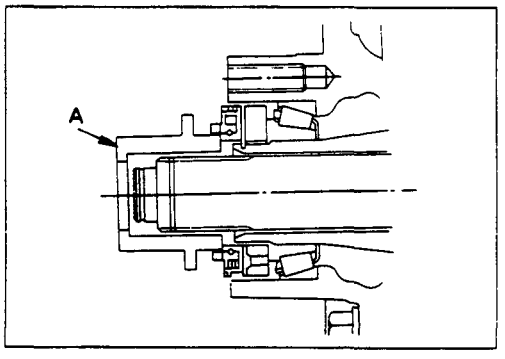

If it is difficult to install the inner cam, use the tool (installer) and a plastic hammer or the equivalent.

Install the special tool.

Use the plastic hammer to lightly tap around the special tool "A" surface as shown in the illustration.

Installer : 5-8840-2137-0 (J-38194)

Note: Do not strike the inner cam gear teeth with the plastic hammer.

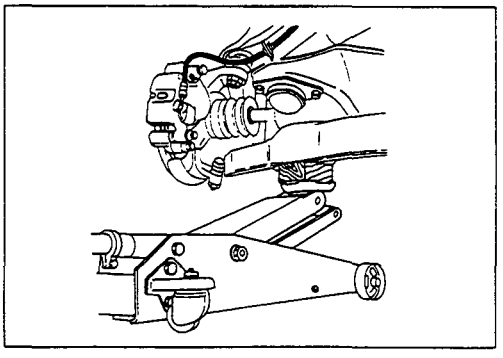

Shim Selection

(1) Lower vehicle from hoist.

(2) Support lower link with floor jack, placing axle in normal horizontal position.

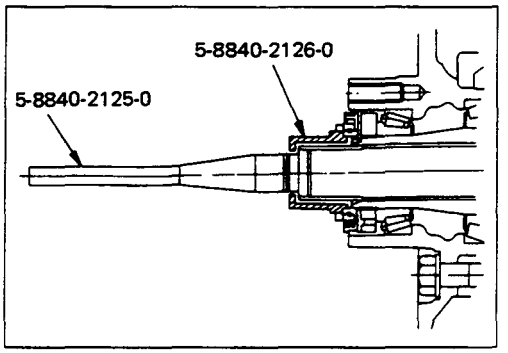

(3) Install special tool 5-8840-2126-0 to axle shaft by 5-8840-2125-0 until it comes into contact with the lock washer.

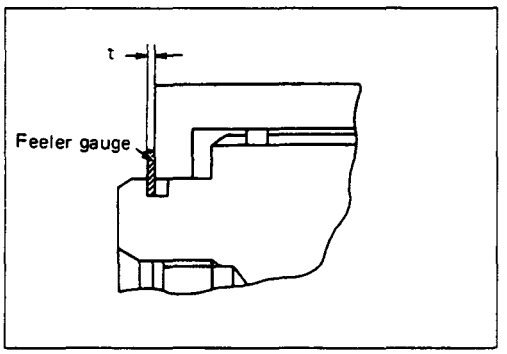

(4) Using feeler gauge, measure clearance "t" between the special tool and the snap ring groove of the axle shaft.

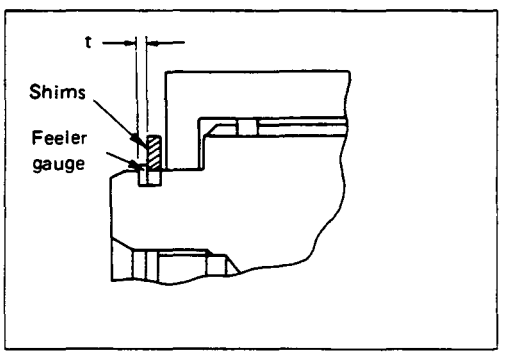

(5) If clearance "t" is larger than snap ring groove, shims must be installed select shims so that clearance "t" is 0 to 0.1 mm (0 to 0.0039 in).

Thickness shims; 0.2, 0.3, 0.5, 1.0 mm

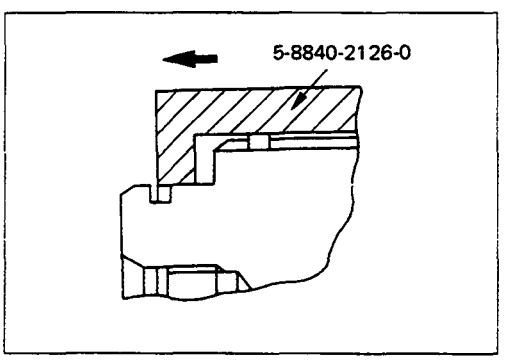

(6) Remove special tool 5-8840-2126-0, leaving the inner cam in position.

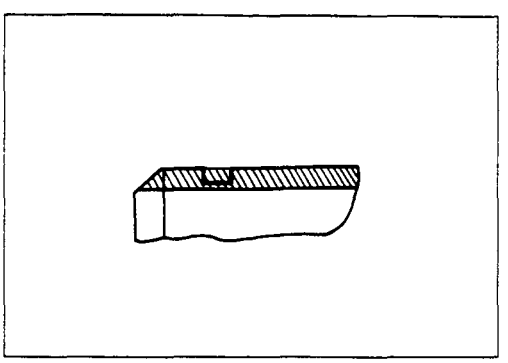

10. Drive Clutch Assembly

Apply multipurpose grease or hub bearing grease to the following portions.

(1) Axle shaft splines

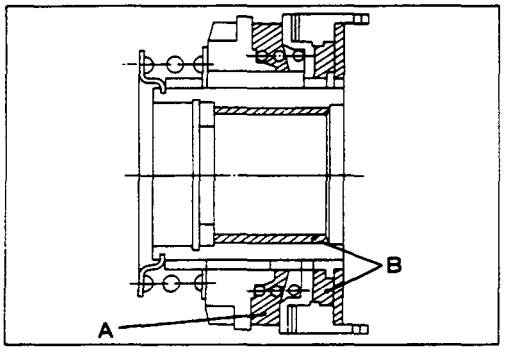

- "A" groove and "B" portion

g(oz)

"A" Groove	7 (0.25)
"B" portion	3 (0.11)

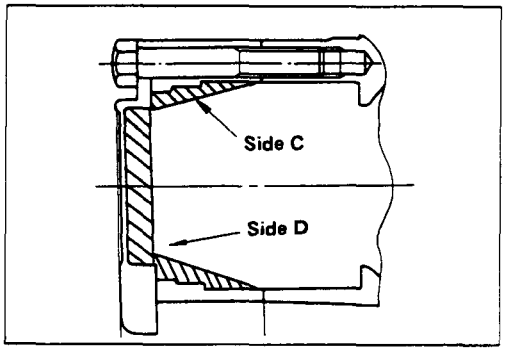

- "C" circumference and "D" portion

g(oz)

"C" circumference	8 (0.29)
"D" portion	4 (0.15)

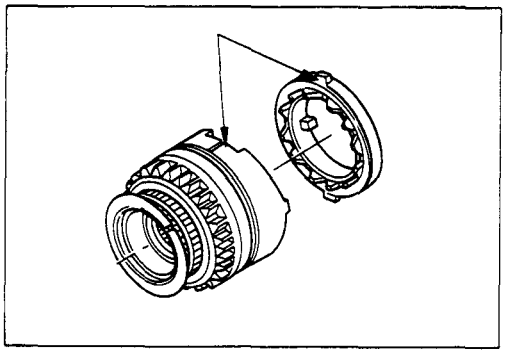

(2) Align the cut part of the drive clutch assembly with the concave part of inner cam.

(3) Engage the cam teeth of the drive clutch assembly to that of the inner cam by turning the axle shaft.

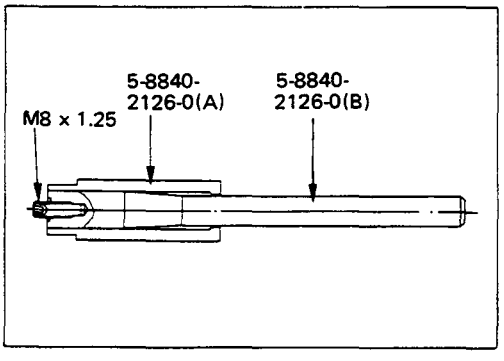

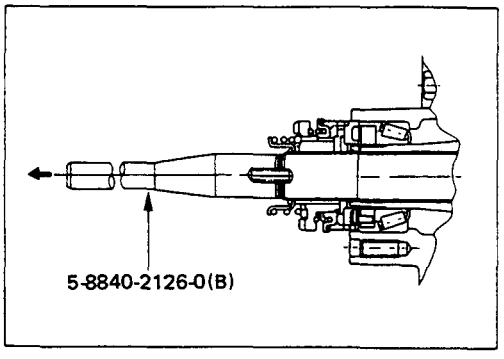

11. Snap Ring and Shims

(1) Install shims (selected above) to axle by hand.

Note:

Always use a new snap ring.

(2) Install special tool 5-8840-2126-0 (B) to axle.

(3) Install snap ring to tool.

(4) Install tool driver 5-8840-2126-0 (A).

(5) Pull out the axle shaft fully by pulling the tool 5-8840-2126-0 (B) and install snap ring to axle by pushing on tool driver 5-8840-2126-0 (A).

(6) Remove tool from axle.

Snap ring installer : 5-8840-2126-0
(J-36835)

Caution

After installation of the shims and the snap ring, check the fitting condition of the snap ring.

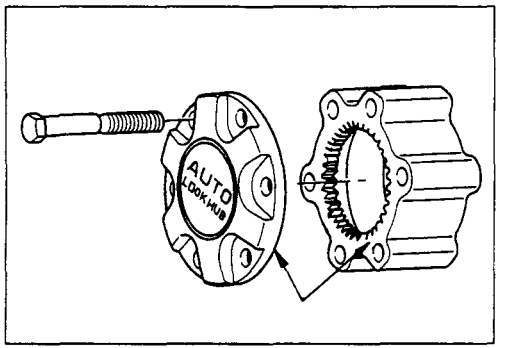

12. Housing Assembly

(1) Apply Loctite 515 or the equivalent to the flange surface of the housing assembly.

(2) Make sure that the housing assembly turns smoothly. If it turns smoothly, the spacer selected above is correct.

(3) Bolt tightening torque:

Torque	kg·m(lb.ft/N·m)
6 ± 0.5 (43.4 ± 3.6/58.9 ± 5)	

FRONT HUB AND DISC (Manual Locking Hub)

DISASSEMBLY

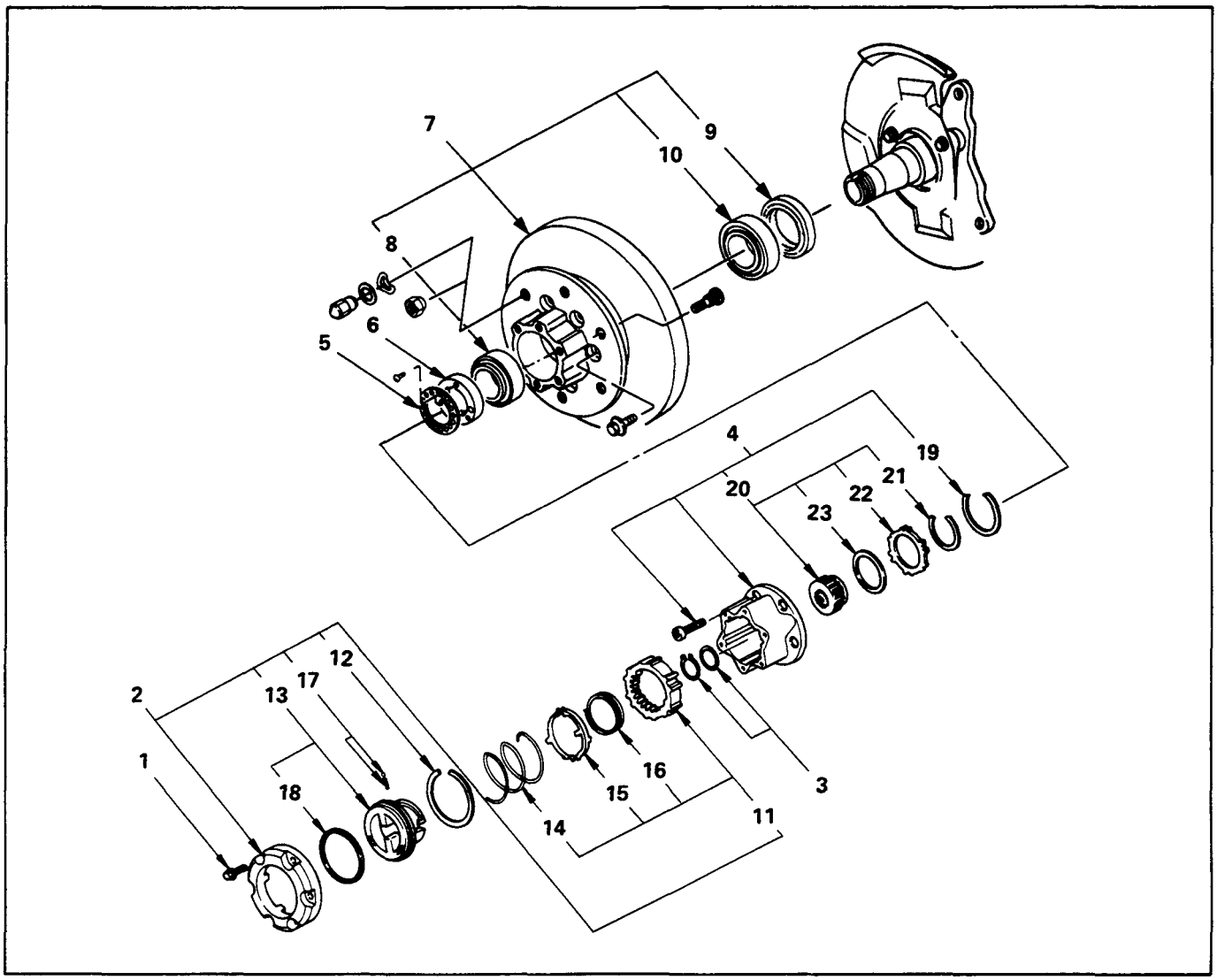

Disassembly Steps

▲ 1. Bolt
2. Housing assembly
3. Snap ring and shims
4. Body assembly
5. Lock washer
▲ 6. Hub nut
▲ 7. Hub and disc assembly
8. Outer bearing
9. Oil seal
10. Inner bearing
▲ 11. Clutch assembly
12. Snap ring
13. Knob
14. Compression spring
15. Follower
▲ 16. Retaining spring
17. Detent ball and spring
18. X-ring
19. Snap ring
20. Inner assembly
21. Snap ring
22. Ring
23. Spacer

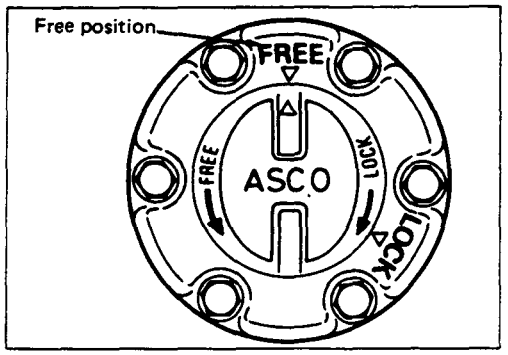

Important Operations

1. Bolt

Before removal, shift transfer lever into "2H" position and set free wheeling hub knob into "FREE" position.

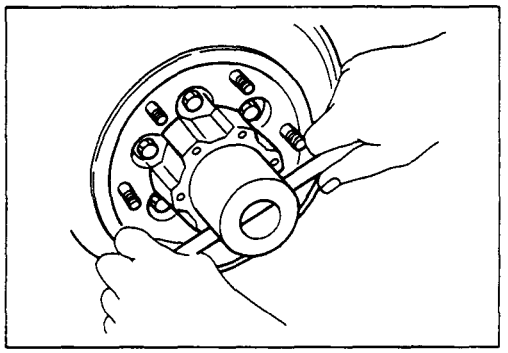

6. Hub Nut

Wrench : 5-8840-2117-0
(J-36827)

Refer to Section 5 "Brake" for disc brake caliper removal procedure.

7. Hub and Disc Assembly

Before disassembly, remove the disc brake caliper assembly and hang it on the frame with wires.

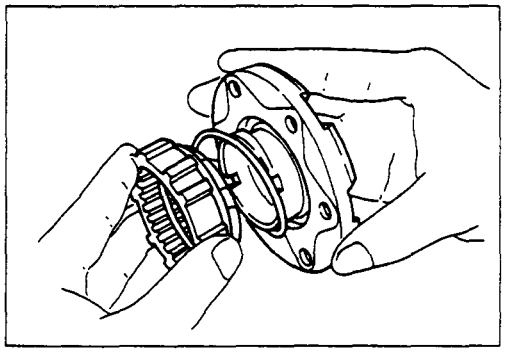

11. Clutch Assembly

While pushing follower knob, turn clutch assembly clockwise and then remove clutch assembly from knob.

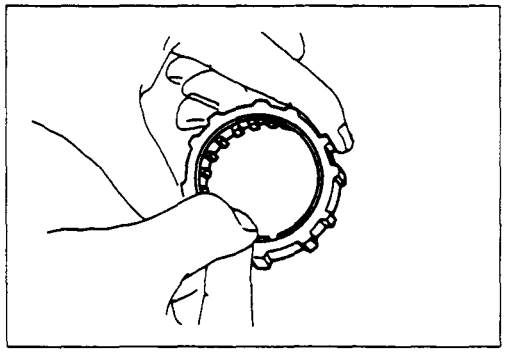

16. Retaining Spring

Remove retaining spring from clutch assembly by turning it counterclockwise.

INSPECTION AND REPAIR

Make necessary correction or parts replacement if wear, damage or any other abnormal conditions are found through inspection.

For inspection and servicing of disc caliper, and relative parts, refer to Section 05 "Service Brakes".

- Hub
- Hub bearing, oil seal
- Knuckle spindle
- Disc
- Caliper
- Free wheeling hub parts (Option)
- Clutch, knob, follower, inner, ring and spring

Visual Check

Inspect the following parts for wear, damage or other abnormal conditions.

REASSEMBLY

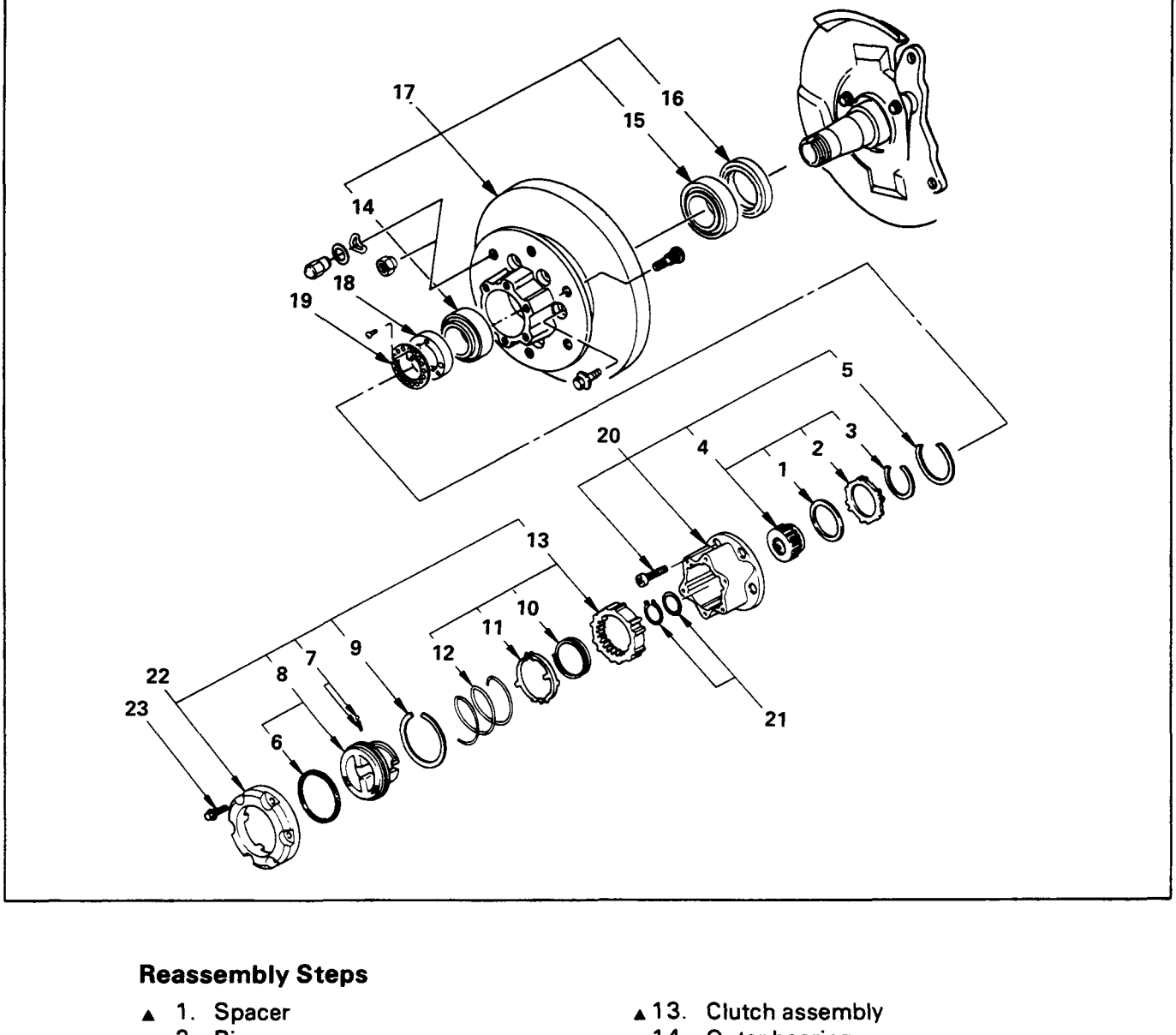

Reassembly Steps

- ▲ 1. Spacer
- 2. Ring
- 3. Snap ring
- ▲ 4. Inner assembly
- 5. Snap ring
- 6. X-ring
- 7. Detent ball and spring
- ▲ 8. Knob
- ▲ 9. Snap ring
- ▲ 10. Retaining spring
- ▲ 11. Follower
- ▲ 12. Compression spring
- ▲ 13. Clutch assembly
- ▲ 14. Outer bearing
- ▲ 15. Inner bearing
- ▲ 16. Oil seal
- ▲ 17. Hub and disc assembly
- ▲ 18. Hub nut
- ▲ 19. Lock washer
- ▲ 20. Body assembly
- ▲ 21. Snap ring and shims
- ▲ 22. Cover assembly
- ▲ 23. Bolt

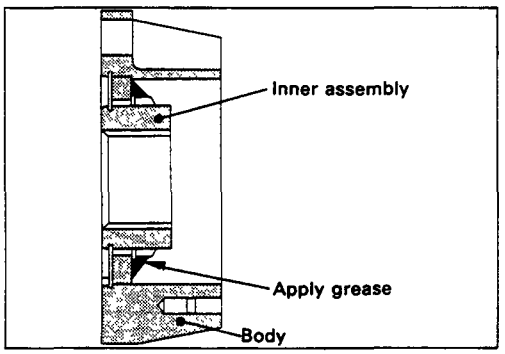

Important Operations

1. Spacer

Apply grease to both faces of spacer.

4. Inner Assembly

Apply grease wheel bearing to inside face of ring.

	g(oz)
Amount of grease	3 (0.10)

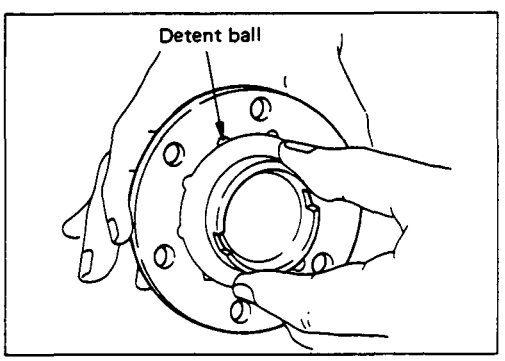

8. Knob

(1) Apply grease wheel bearing to outer circumference of knob and inner circumference of cover.
(2) Align detent ball to either groove of cover.

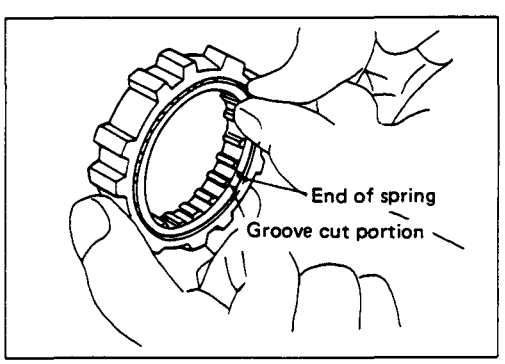

9. Snap Ring

Turn the smoother face to knob side.

10. Retaining Spring

Align the end of spring to the end of cut portion of clutch spring groove.

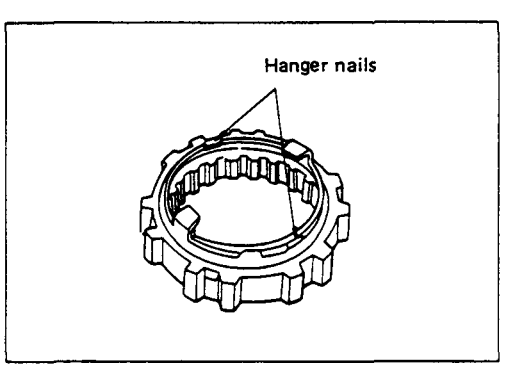

11. Follower

Install follower to clutch so that follower nail will come closer to the bent portion of retaining spring by aligning follower stopper nail to outer teeth of clutch. Then, hook retaining spring onto upper portion of hanger nails of follower.

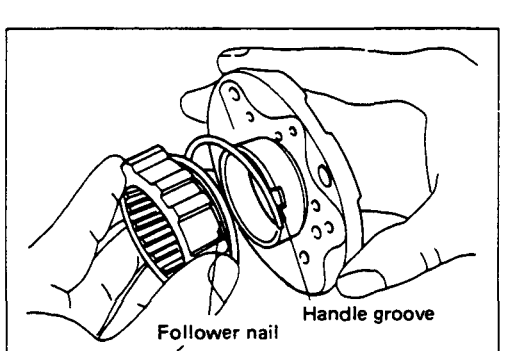

12. Compression Spring.

Turn the smaller diameter side to follower.

13. Clutch Assembly

Align follower nail to handle groove, and then assemble clutch with knob by pushing and turning clutch counterclockwise to knob.

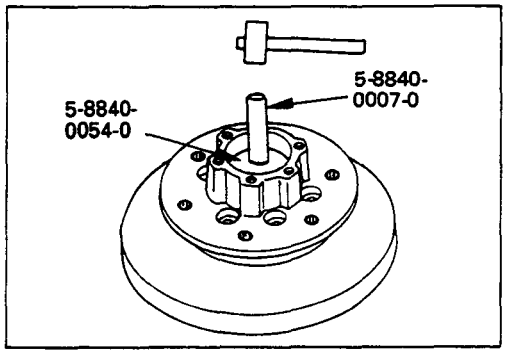

14. Outer Bearing

Outer race ; outer bearing
Install the outer race by driving it into the hub.

Installer : 5-8840-0054-0
(J-29015)
Grip : 5-8840-0007-0
(J-8092)

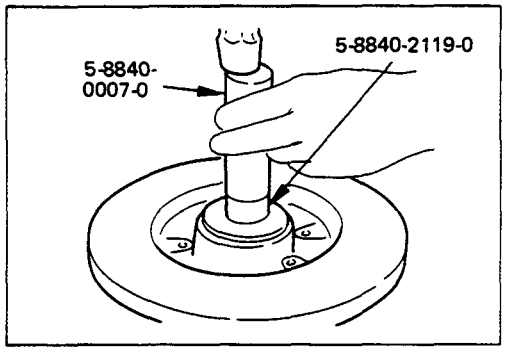

15. Inner Bearing

Outer race ; outer bearing
Install the outer race by driving it into the hub.

Installer : 5-8840-2119-0
(J-36829)
Grip : 5-8840-0007-0
(J-8092)

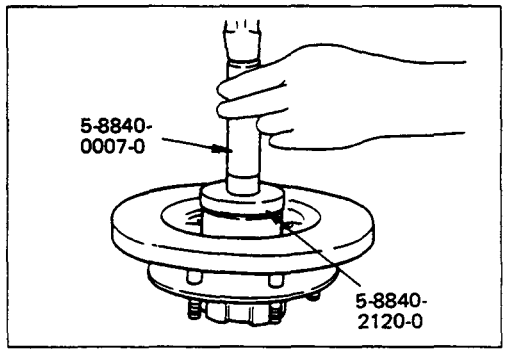

16. Oil Seal

Installer : 5-8840-2120-0
(J-36830)
Grip : 5-8840-0007-0
(J-8092)

Apply grease (Besco L-2 or equivalent) to the lip portion.

17. Hub and Disc Assembly

(1) Apply grease in the hub.

(2) Apply grease (Besco L-2 or equivalent) to the outer and inner bearing.

g(oz)

Hub	35 (1.23)
Outer bearing	10 (0.35)
Inner bearing	15 (0.53)

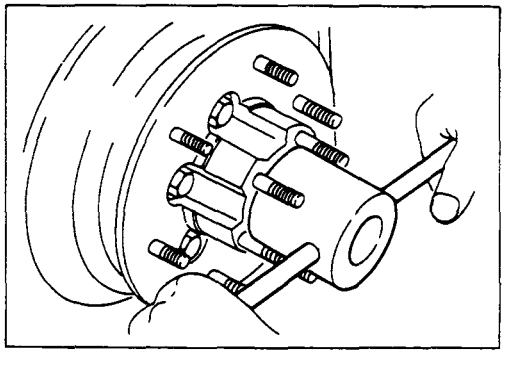

18. Hub Nut

(1) Turn the place where there is a chamfer in the tapped hole to the outer side, and attach the nut.

Wrench : 5-8840-2117-0
(J-36827)

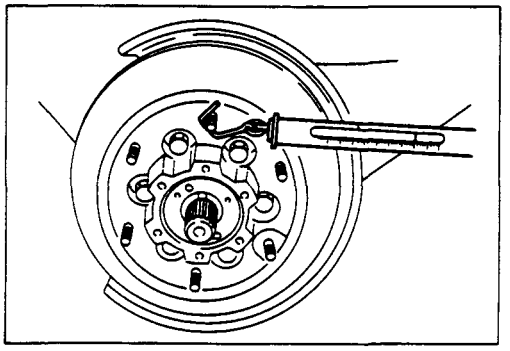

Preload Adjustment

Tighten the hub nut at 3 kg·m (21.716 lb.ft/29.4 N·m), then loosen the nut to the full.

Tighten the hub nut at the value given below, using a spring scale on the wheel pin.

Bearing Preload	kg(lb)
New bearing and New oil seal	2 —2.5 (4.4—5.5)
Used bearing and New oil seal	1.2—1.8 (2.6—4.0)

If the measured bearing preload is outside the specifications, adjust it by loosening or tightening the bearing nut.

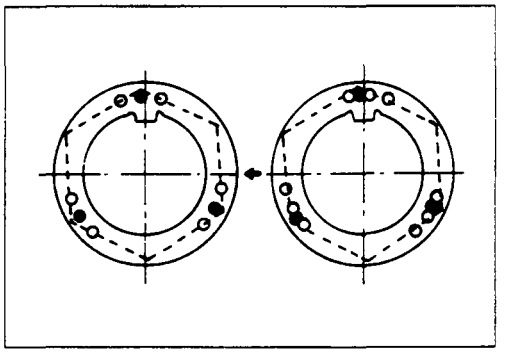

19. Lock Washer

Turn the side with larger diameter of the tapered bore to the vehicle outer side, and attach the washer.
If the bolt holes in the lock plate are not aligned with the corresponding holes in the nut, reverse the lock plate.
If the bolt holes are still out of alignment, turn in the nut just enough to obtain alignment. Screw is to be fastened tightly so its head may come lower than the surface of the washer.

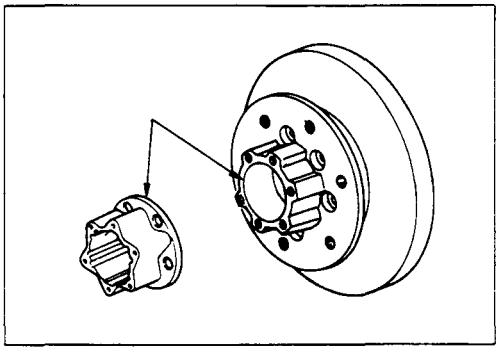

20. Body Assembly

Apply adhesive (Loctite 515 or equivalent) to the both joining faces.

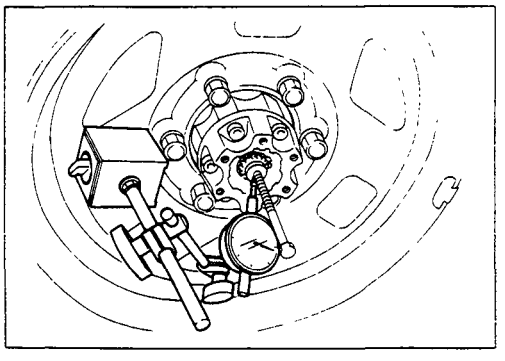

21. Snap Ring and Shims

Adjust the clearance between the free wheeling hub body and the snap ring.

Clearance	mm(in)
0 — 0.3 (0 — 0.01)	

Adjust Shims Available	mm(in)
0,2, 0.3, 0.5, 1.0 (0.008, 0.011, 0.020, 0.039)	

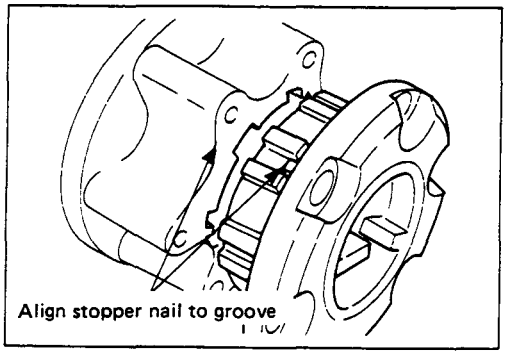

22. Cover Assembly

Align stopper nails to grooves of body.

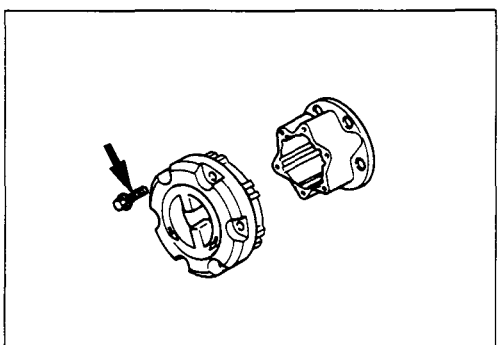

23. Bolt

Torque	kg·m(lb.ft/N·m)
1.2 ± 0.2 (8.7 ± 1.4/11.8 ± 2.0)	

FRONT PROPELLER SHAFT

REMOVAL AND INSTALLATION

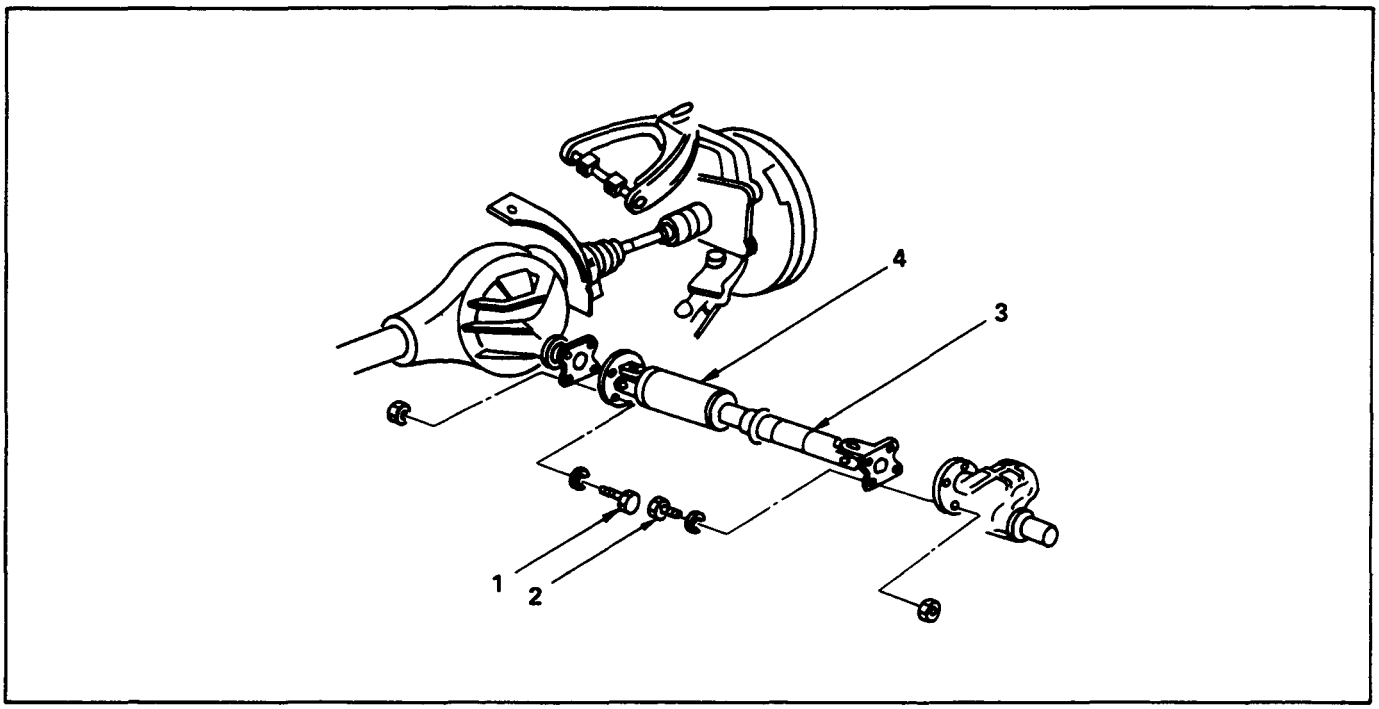

Since the propeller shaft assembly is carefully balanced, a setting mark should be applied to the flange before removal to indicate correct position.

Install the parts by aligning the setting marks made at removal.

Removal Steps

1. Bolt ; differential side
2. Bolt ; transfer side
3. Propeller shaft assembly ; rear side
4. Propeller shaft assembly ; front side

Installation Steps

4. Propeller shaft assembly ; front side
▲ 3. Propeller shaft assembly ; rear side
▲ 2. Bolt ; transfer side
▲ 1. Bolt ; differential side

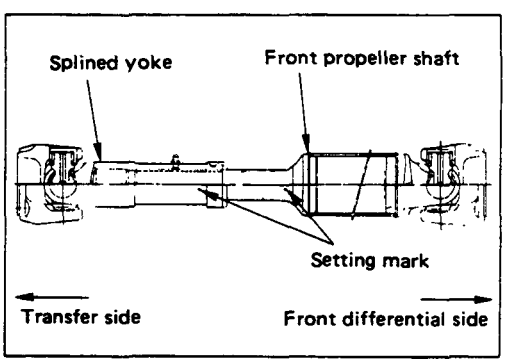

Important Operation — Installation

3. Propeller Shaft Assembly ; Rear Side

Align the indexing marks (about 3 mm dia. punched mark) on the propeller shaft end and the splined yoke.

2. Bolt ; Transfer Side

Torque	kg·m(lb.ft/N·m)
2.6L Engine	6.4 ±0.4 (46.3 ±2.9/62.8 ±3.9)

1. Bolt ; Differential Side

Torque	kg·m(lb.ft/N·m)
2.6L Engine	6.4 ±0.4 (46.3 ±2.9/62.8 ±3.9)

DISASSEMBLY

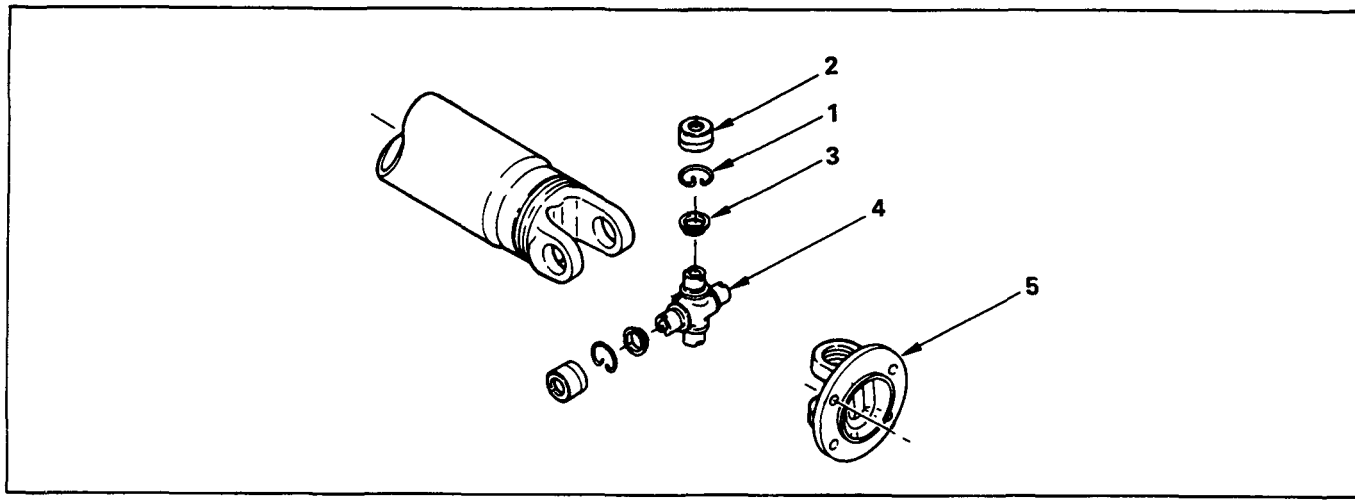

Disassembly Steps

1. Snap ring
2. ▲ Needle roller bearing
3. Seal
4. Spider
5. Flange yoke

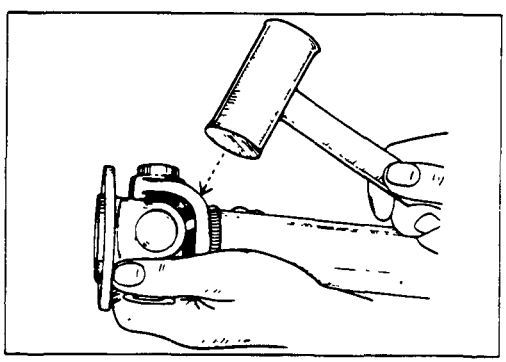

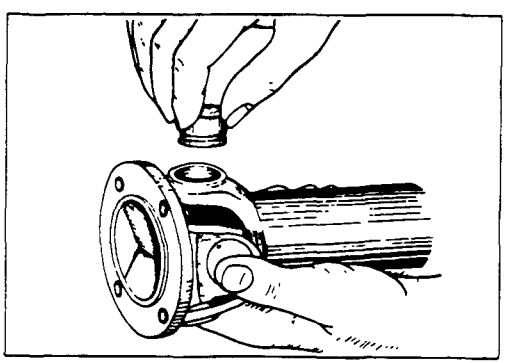

Important Operation

2. Needle Roller Bearing

(1) Tap out the bearing by striking the shoulder of the yoke using a mallet or a copper hammer.
Remove the needle roller bearing in position by tapping lightly on the spider.
Remove the remaining bearings in the similar manner.

(2) As the yoke is tapped, the needle roller bearing comes out gradually, permitting easy removal with hand.

INSPECTION AND REPAIR

Make all necessary adjustments, repairs, and part replacements if wear, damage, or other problems are discovered during inspection.

Spider
Needle roller bearing
Yoke
Flange
Center bearing
Cushioning rubber
Bracket

Visual Check

Inspect following parts for wear, damage, or other abnormal conditions.

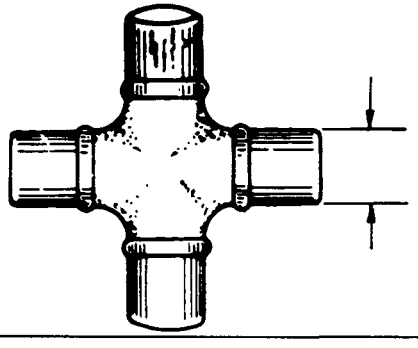

Outside Diameter of Spider Pins

mm(in)

Standard	Limit
17.000 (0.669)	16.90 (0.665)

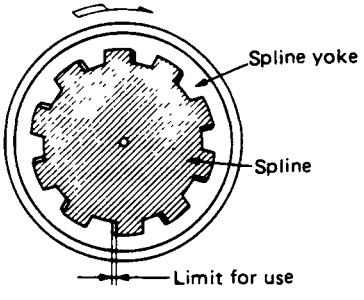

Play in Splines in Normal Direction of Rotation

Check the amount of play in the sleeve yoke and propeller shaft splines in the direction of rotation, using a pointed feeler gauge.

mm(in)

Standard	Limit
0.074 — 0.156 (0.003 — 0.006)	0.3 (0.012)

REASSEMBLY

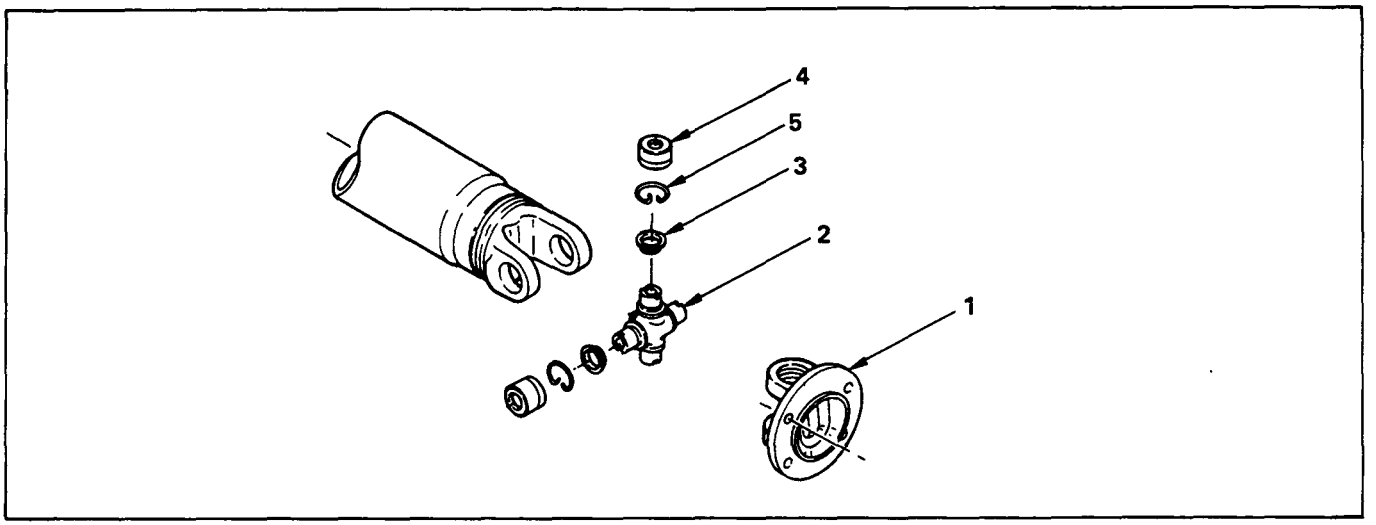

Reassembly Steps

1. Flange yoke
2. Spider
3. ▲ Seal
4. ▲ Needle roller bearing
5. ▲ Snap ring

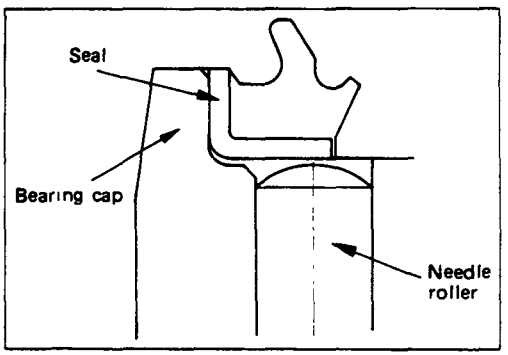

Important Operations

3. Seal

Discard the used seal and install a new one.

Push the seal in until its outer surface is flush against the bearing cap surface.

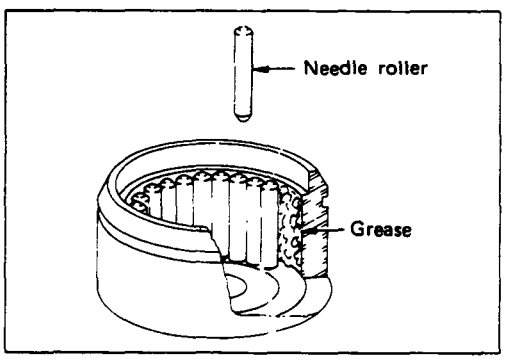

4. Needle Roller Bearing

(1) Apply a molybdenum-disulfide grease or a multipurpose type grease NLG1 No. 2 to the bearing cap inner surface.

Install the needle rollers.

Amount of grease required	g(oz)
Approx. 1.2 (0.042)	

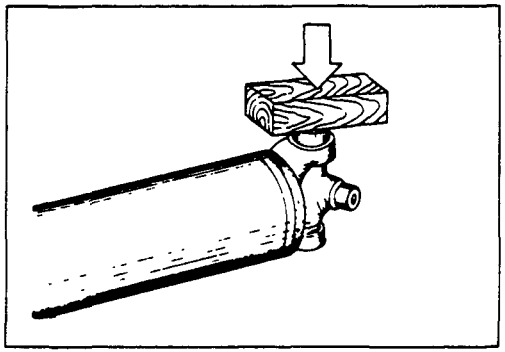

(2) Attach the spider to the yoke and then insert the needle roller bearing cap into the hole by using a wood block and a hammer or a press.

5. Snap Ring

When the bearing cap is in position, select and attach a snap ring of suitable thickness so that the end play of the spider pin is held within 0.1 mm (0.004 in.).

mm(in)

Snap ring thickness	Identifity color
1.5 (0.059)	Blue
1.545 (0.061)	White
1.59 (0.063)	Yellow
1.635 (0.064)	Green
1.68 (0.066)	Not color

TROUBLESHOOTING

Refer to this Section to quickly diagnose and repair front axle problems. Each troubleshooting chart has three headings arranged from left to right.

(1) Checkpoint (2) Trouble Cause (3) Countermeasure

This Section is divided into ten sub-sections:

4 x 2 Model

1. Wanders and pulls
2. Front wheel shimmy

4 x 4 Model

1. Oil leak at front axle
2. Oil leak at pinion shaft
3. Noises in front axle drive shaft joint
4. Noises in front axle
5. Wanders and pulls
6. Front wheel shimmy
7. Automatic locking free wheel hub
   1) Does not lock or locks only on one side
   2) Does not freewheel or freewheels only to one side
   3) Noises in automatic locking free wheel hub

Propeller Shaft

1. Noise
2. Vibration

4 x 2 MODEL

1. WANDERS AND PULLS

Checkpoint		Trouble Cause	Countermeasure
Wheel bearing preload	NG	Too tight	Adjust the wheel bearing preload
OK			
Front alignment	NG	Incorrect	Adjust the front alignment
OK			
Steering linkage	NG	Loose or worn	Tighten or replace
OK			
Steering gear out of adjustment	NG	Incorrect or broken	Adjust the steering gear out of adjustment or replace
OK			
Tire	NG	Worn or improperly inflated	Replace or adjust the inflation
OK			
Suspension	NG	Front or rear suspension parts loose or broken	Tighten or replace

2. FRONT WHEEL SHIMMY

Checkpoint		Trouble Cause	Countermeasure
Wheel bearing	NG	Worn or improperly adjusted	Adjust or replace
OK			
Shimmy damper	NG	Worn	Replace the shimmy damper
OK			
Front alignment	NG	Incorrect	Adjust the front alignment
OK			
Ball joint or bush	NG	Worn	Replace the ball joint or bush
OK			
Steering linkage	NG	Loose or worn	Tighten or replace
OK			
Steering gear out of adjustment	NG	Incorrect or broken	Tighten or replace
OK			
Tire	NG	Worn or improperly inflated	Replace or adjust the inflation
OK			
Shock absorber	NG	Worn	Replace the shock absorber

4 x 4 MODEL

1. OIL LEAK AT FRONT AXLE

Checkpoint		Trouble Cause	Countermeasure
Oil seal	NG	Worn or defective oil seal	Replace the oil seal
OK			
Front axle housing	NG	Cracked	Repair or replace

2. OIL LEAK AT PINION SHAFT

Gear oil level	NG	Too much gear oil	Correct the oil level
OK			
Oil seal	NG	Worn or defective	Replace the oil seal
OK			
Pinion flange	NG	Loose or damaged	Tighten or replace

3. NOISES IN FRONT AXLE DRIVE SHAFT JOINT

Drive shaft joints and bellows (B.J and DOJ)	NG	Broken or worn	Replace the drive shaft joints and bellows

4. NOISES IN FRONT AXLE

Checkpoint		Trouble Cause	Countermeasure
Oil level	NG	Insufficient gear oil	Replenish the gear oil
	NG	Wrong or poor grade gear oil	Replace the gear oil
Drive pinion to ring gear backlash	NG	Too much or too little backlash	Adjust the backlash
Ring gear, pinion gear or side gear	NG	Worn or chipped	Replace the ring gear pinion gear or side gear
Pinion shaft bearing	NG	Worn	Replace the pinion shaft bearing
Wheel bearing	NG	Worn	Replace the wheel bearing
Differential bearing	NG	Loose or worn	Tighten or replace

OK

5. WANDERS AND PULLS

Checkpoint		Trouble Cause	Countermeasure
Wheel bearing preload	NG	Too tight	Adjust the wheel bearing preload
OK			
Front alignment	NG	Incorrect	Adjust the front alignment
OK			
Steering linkage	NG	Loose or worn	Tighten or replace
OK			
Steering gear out of adjustment	NG	Incorrect or broken	Adjust the steering gear out of adjustment or replace
OK			
Tire	NG	Worn or improperly inflated	Replace or adjust the inflation
OK			
Suspension	NG	Front or rear suspension parts loose or broken	Tighten or replace

6. FRONT WHEEL SHIMMY

Checkpoint		Trouble Cause	Countermeasure
Wheel bearing	NG	Worn or improperly adjusted	Adjust or replace
OK			
Shimmy damper	NG	Worn	Replace the shimmy damper
OK			
Front alignment	NG	Incorrect	Adjust the front alignment
OK			
Ball joint or bush	NG	Worn	Replace the ball joint or bush
OK			
Steering linkage	NG	Loose or worn	Tighten or replace
OK			
Steering gear out of adjustment	NG	Incorrect or broken	Tighten or replace
OK			
Tire	NG	Worn or improperly inflated	Replace or adjust the inflation
OK			
Shock absorber	NG	Worn	Replace the shock absorber

7. AUTOMATIC LOCKING FREE WHEEL HUB

(1) DOES NOT LOCK OR LOCKS ONLY ON ONE SIDE

Note:

1. **Stop the vehicle**
2. **Shift the transfer lever to 4H or 4L**
3. **Now start driving the vehicle and the hubs will lock automatically.**
4. **Once the hubs are locked, they will remain locked, even if the transfer lever is shifted from 4L or 4H into 2H, as long as the vehicle travels in a same direction.**

Checkpoint		Trouble Cause	Countermeasure
Try locking procedure once more	NG	Still will not lock	Replace

(2) DOES NOT FREEWHEEL OR FREEWHEELS ONLY TO ONE SIDE

Note:

Freewheel operation

1. **Stop the vehicle**
2. **Shift the transfer lever to 2H**
3. **Back up the vehicle for three or four feet; this will disengage the front differential.**

Checkpoint		Trouble Cause	Countermeasure
Try freewheel procedure once more	NG	Still will not freewheel	Drive the vehicle for five minutes and then try the freewheel procedure again
		Still will not freewheel	Replace

(3) NOISES IN AUTOMATIC LOCKING FREE WHEEL HUB

Note:
Some noise at the time of shifting from "LOCK" to "FREE" or vice versa is normal. It is not a sign of trouble.

Checkpoint		Trouble Cause	Countermeasure
Holdout ring axial play	NG	Excessive axial play	Connect the axial play or replace the driven clutch
OK			
Operating of automatic locking free wheel hub	NG	One side operating	Replace the driven clutch
OK			
Front axle or joint	NG	Damaged or loose	Replace or tighten

PROPELLER SHAFT

1. NOISE

Checkpoint		Trouble Cause	Countermeasure
Yoke spline	NG	Damaged or worn	Replace
OK			
Spider bearing	NG	Worn or jammed	Replace

2. VIBRATION

Shaft runout	NG	Incorrect	Replace
OK			
Shaft balance	NG	Unbalance	Adjust
OK			
Transmission rear housing bushing, transfer case housing bushing	NG	Worn	Replace
OK			
Yoke spline	NG	Jammed	Replace

ISUZU

KB - SERIES

WORKSHOP MANUAL

SECTION 4E

DIFFERENTIAL LOCKING DEVICE

SECTION 4E

DIFFERENTIAL LOCKING DEVICE (MODEL 77/82)

TABLE OF CONTENTS

	PAGE
Description and operating principle	4E – 2
Electrical circuit	4E – 2
Pneumatic circuit	4E – 2
Diff lock actuation	4E – 3
Servicing	4E – 3
Diff lock malfunction	4E – 3
Fault diagnosis	4E – 5
Repair of cover assembly	4E – 8
Failure off diff lock or axle components	4E – 9
Oil leak at diaphragm	4E – 11
Failure of mechanical components	4E – 12
Exploded view of diff lock component assembly	4E – 13
Electrical control system diagram	4E – 14
Pneumatic control system	4E – 14
Setting yoke "Off" position checking between pins	4E – 15
Setting the switch spring position	4E – 15

DESCRIPTION AND OPERATING PRINCIPLE

The Model 77 and Model 82 diff locks are a family of electrically engaged, vacuum actuated differential locks for rear axles.

The axles are identified by the I.D. tag on the underside of the axle carrier which will show the model (77 or 82) followed by eight serial number digits.

Components of the diff housing and coupling assembly and the cover assembly are shown in Fig. 1.

Schematic diagrams of the Pneumatic and Electrical Control System are shown in Fig. 2.

ELECTRIC CIRCUIT

Closing the dashboard switch (on) will energise the red 'on' light and the control valve. When the diff actually locks, the green 'Locked' lights circuit is earthed via the axle switch, thus energising the 'locked' light.

When the dashboard switch is opened (off), the 'on' light and control valve are de-energised. The 'locked' light will however remain on until the diff actually unlocks, causing the earth connection to be broken via the axle switch.

PNEUMATIC SYSTEM

With the engine running, vacuum is built up in the front hose from a T-piece connection to the brake booster hose. This vacuum is maintained in the front hose by the non-return valve and the 'closed' control valve.

When the control valve is energised (see ELECTRICAL CIRCUIT) it connects the front hose to the rear hose and the diaphragm rear chamber, creating a vacuum in the latter. The front hose acts as an accumulator as well as a hose. When the control valve is de-energised, it closes the connection to the front hose and connects the rear hose to atmosphere. This allows the vacuum in the diaphragm rear chamber to be released.

DIFF LOCK ACTUATION

When vacuum is applied to the diaphragm rear chamber, it pulls the yoke screw and yoke rearward. This causes the coupling to be forced to the left via the yoke pins. The coupling teeth are permanently engaged with the slots in the diff housing but can slide left and right in these slots to engage/disengage with the side gear lock tooth slots.

When the coupling teeth align with the lock tooth slots in the side gear, the coupling will slide fully into engagement with the side gear. The coupling then prevents relative movement between diff housing and side gear, causing the whole diff train and both axle shafts to rotate as a unit, i.e. locked.

When the vacuum in the rear diaphragm chamber is released the yoke return spring forces the coupling to the left and out of engagement with the side gear. This occurs as soon as any torque between side gear and coupling is released.

When the coupling is fully engaged with the side gear, the diaphragm assembly moves fully rearward, causing its metal part to contact the switch spring.
This earths the switch spring via the various metal components of the axle which are in electrical contact with the vehicle earth.

When the coupling is dis-engaged, contact between the switch spring and diaphragm metal is broken and the 'locked' light circuit is then incomplete.

SERVICING

The only requirements for servicing are:-

- the diff lock does not function properly, or
- there is failure of one or more diff lock axle components.

DIFF LOCK MALFUNCTION

Test the diff lock function as follows:-

1. Jack both rear wheels off the ground.
   Warning: Do not test diff lock with only ONE rear wheel jacked. It could drive the vehicle off the jack.

2. Place gearbox in neutral and start the engine to generate vacuum.

3. With engine idling, switch the diff lock on. The red indicator light should be on. The green light can be on or off.

4. Rotate one rear wheel forward by hand until the diff lock engages. This should be audible and the opposite wheel should also rotate forward. The green light should now be on.

5. Switch the diff lock off and then rotate one rear wheel slightly backwards and forwards until the diff lock disengages. When one rear wheel is turned forward the opposite rear wheel should now turn backwards. Both lights should now be off.

6. If these checks are OK, the diff lock functions correctly.

7. A road test can also be conducted by switching the diff lock on whilst cornering at low speed (even on tar if the vehicle is not loaded). The diff lock is engaged when the green light comes on and the rear tyres chirp on the road.
   Switch the diff lock off and steer very slightly left and right until the diff lock disengages.

   If the diff lock does not function correctly, follow the fault diagnosis charts A to D in the next section.

FAULT DIAGNOSIS

A. Diff lock does not engage

With engine idling and diff lock on, check in sequence:-

PRIMARY CHECK		SECONDARY CHECKS OR ACTION
Is red light on?	NO →	- Fuse - Power at switch terminals (f) and (g) (Fig. 2A). - Power connection (a). Is it 12V? - Faulty switch.
	YES ↓	- Faulty red LED.
Is there power at control valve red/white lead (b) (Fig. 2A)?	NO →	- Break in red/white lead.
	YES ↓	
Does valve 'click' when diff lock is switched on-off-on--?	NO →	- Brown lead (d) earthed? - Faulty control valve (replace).
	YES ↓	
Is there vacuum in thick hose at (s) (Fig. 2B)?	NO →	- Non-return valve hose connections reversed nylon (Fig. 2B).
	YES ↓	- Blockage in hose from manifold to valve - trace upstream.
With hose re-connected at (s) and valve still energised, is there vacuum at valve pipe (t) (Fig. 2B)?	NO →	- Faulty valve (replace).
	YES ↓	
With hose re-connected at (t), is there vacuum is applied at (v)?	NO →	- Blockage or kink in thin nylon hose between valve and axle
	YES ↓	
Remove axle cover. Does yoke move left when vacuum is applied at (v)?	NO →	- Faulty cover assembly. See REPAIR OF REAR COVER.
	YES ↓	
Does coupling slide freely left and right when side gear slots are aligned (rotate one wheel to align)?	NO →	- Faulty diff housing assy. (Correct cause of sticking or replace diff housing assy complete).
	YES ↓	
Replace cover assy. Make sure both yoke pins engage in coupling slot. Re-check diff lock engagement.	NO →	- Contact manufacturers.

FAULT DIAGNOSIS (CONT.)

B. Diff lock does not disengage

With engine idling and diff lock switched off, check in sequence:-

PRIMARY CHECK		SECONDARY CHECKS OR ACTION
Is red light off?	NO →	- Faulty switch replace. - Short circuit from red power lead (a) to red/ white lead (g).
	YES ↓	
Power at control valve red/white lead?	YES →	- Short circuit from red power lead to red/white lead.
	NO ↓	
Correct control valve connections? (Thick hose to centre pipe marked "VACUUM". Thin hose to outer pipe - Fig. 2B).	NO →	- Correct the connections.
	YES ↓	
Diff lock disengages when thin nylon pipe is disconnected from control valve?	YES →	- Faulty control valve (replace).
	NO ↓	
Diff lock disengages when vacuum pipe is disconnected from axle at (v), (Fig. 2B)?	YES →	- Blockage or kink in thin nylon hose from valve to axle.
	NO ↓	
Are yoke pins correctly located in coupling groove? Remove cover carefully to check	NO →	- Re-assembly cover correctly.
	YES ↓	
Does yoke spring back to the right when vacuum is disconnected.	NO →	- Faulty cover assembly. See REAR OF COVER ASSEMBLY.
	YES ↓	
Does coupling slide freely to the right.	NO →	- Faulty diff housing assy. (Correct cause of sticking or replace diff housing assy complete).
	YES →	- Contact manufacturers.

FAULT DIAGNOSIS (CONT.)

C. Green light does not illuminate when diff lock is locked

With diff lock on and locked, check in sequence:-

PRIMARY CHECK		SECONDARY CHECKS OR ACTION
Does green light illuminate when terminal (e) at axle is earthed to chassis? (Fig. 2A).	NO →	- Faulty LED> - Break in black wire from LED to axle. - No power supply to LED.
	YES ↓	
Does green light illuminate when aluminium cover is earthed to chassis.	YES →	- Fit earth wire from any place on axle to a chassis
	NO →	- Faulty cover assy. See REPAIR OF COVER ASSEMBLY.

D. Axle does not drive vehicle

PRIMARY CHECK		SECONDARY CHECKS OR ACTION
Do the axle shafts have 27 tooth splines?	NO →	- Replace with correct 27 tooth axle shaft splines.
	YES →	- Contact manufacturers.

REPAIR OF COVER ASSEMBLY

If the fault has been traced to the cover assembly, remove it from the rear axle and repair it according to the fault.

After repairing the cover assembly, re-assemble it to the axle, making sure that the yoke pins engage in the coupling groove.

Fault from diagnosis chart A i.e. with vacuum applied to pipe (V), yoke does not move to the left.

a) Sticking yoke

1. Move the yoke to the left by hand, check that it moves freely and returns freely via the return spring.

2. If not, locate the cause of sticking and correct it. Replace faulty parts when necessary.

3. Check for excessive wear on the yoke pins. Replace the yoke if necessary.

4. If it is necessary to remove the shaft-yoke to cover, drill a hole in the expansion plug which retains the shaft and lever the plug out.
   - Take care not to damage the aluminium cover
   - Apply silicone sealer to the new expansion plug before expanding it into place with a flat faced punch and medium hammer blow.

REPAIR OF COVER ASSEMBLY

Fault from diagnosis chart A (cont'd)

b) Leaking diaphragm

If the fault is an air leak (or oil leak), replace the diaphragm.

1. Remove the plastic diaphragm cover.

2. Remove the diaphragm from the yoke screw and replace it.
   - Earlier models have two washers and a self-locking nut to retain the diaphragm.
     Later models have a integral diaphragm and washer assembly (see Fig. 1).
     Be sure to re-assembly in the correct sequence (Fig. 1).
   - If replacing the older type diaphragm and separate washers with the new type integral diaphragm and washer assembly, then the spring-yoke to diaphragm must also be replaced with 06-00-156-010 and screw-yoke to diaphragm with 06-00-183-037.

3. Adjust the yoke 'off' position with the aid of Gearmax **Special Tool Number 5397-6205 as follows:-**
   - Bolt the special tool to the cover as shown in Fig. 3. Tighten the nuts.
   - Restrain the diaphragm washer assy (or rear washer and nut assy on older models) by holding it with a spanner.
   - Get an assistant to push the diaphragm and washer assembly forward (i.e. hold it firmly against the aluminium cover).
   - Adjust the yoke screw with an Allan key so that there is a gap of 0,4 mm between the yoke pins and the stops on the special tool. Measure with a feeler gauge.
   - On the older design, get the assistant to apply a drop of Locktite 242 (or equivalent) to the end of the screw and tighten the self-locking nut to a torque of 2,0 to 3,0 Nm. (The new type does not require a lock-nut).
   - With the yoke held in its off position by the return spring, check that there is a gap of zero to 0,8 mm between the yoke pins and the stops on the special tool.

4. The special tool is also designed to check that the yoke pins are the correct distance apart. There should be a gap of 0,10 to 0,50 mm between one end of one pin and the tool when the outer pin end is in contact with the tool (Fig. 3). The yoke can slide on the shaft to achieve this. Bend the yoke if necessary.

5. Check the switch spring position adjustment as per Fig. 4 and re-assembly the diaphragm cover assembly to the aluminium cover assembly. Torque the six M4 screws to 1,5 to 1,9 Nm.

REPAIR OF COVER ASSEMBLY (CONT'D)

Fault from diagnosis chart B i.e. Yoke does not spring back to the right when vacuum is disconnected.
This could be due to the return spring being weak or broken or the yoke sticking for some reason.
In either event, remote the shaft-yoke to cover as described and replace the return spring or correct the cause of sticking. If the yoke to diaphragm screw setting is disturbed, re-set.

Fault from diagnosis chart C i.e. green light does not illuminate when diff-lock is on and locked.

1. Remove the plastic diaphragm cover assy. Check that the switch spring is not broken and that the diaphragm washer and switch spring are clean.

2. Check, and if necessary, adjust the position of the end of the switch spring as shown in Figure 4.

3. Confirm that there is electrical contact between the switch spring and the external mounting terminal to which it is screwed or pop-rivetted. If not, correct the problem or replace the diaphragm cover assembly.

4. Re-assemble the diaphragm cover assembly to the Aluminium cover assembly. Torque the six screws to 1,5 to 1,9 Nm.

5. If the fault persists, the yoke 'off' position setting is suspect.

FAILURE OF DIFF LOCK OR AXLE COMPONENTS
OIL LEAK AT DIAPHRAGM

First tighten the six screws holding the plastic cover to 1,5 to 1,9 Nm. If this does not cure the problem, replace the diaphragm.

FAILURE OF MECHANICAL COMPONENTS

Replace failed or damaged components as required. Check the following items when re-assembling:-

With the ring gear bolted to the assembled diff housing, the side gears must be able to rotate freely.

1. Rotate the side gears so that the lock tooth slots are aligned with the slots in the RH diff housing.

2. Stand the diff housing assembly vertical i.e. ring gear teeth facing up.

FAILURE OF MECHANICAL COMPONENTS (CONT'D)

3. Fit the coupling with the groove towards the ring gear.

4. The coupling must be able to slide freely under its own weight to fully engage with the side tooth slots. Remove any dirt or burrs or replace parts if necessary.

   Set up diff break-away and backlash as per the main section of the Gearmax Service Manual, 1990 Edition.

EXPLODED VIEW OF DIFF LOCK COMPONENT ASSEMBLY

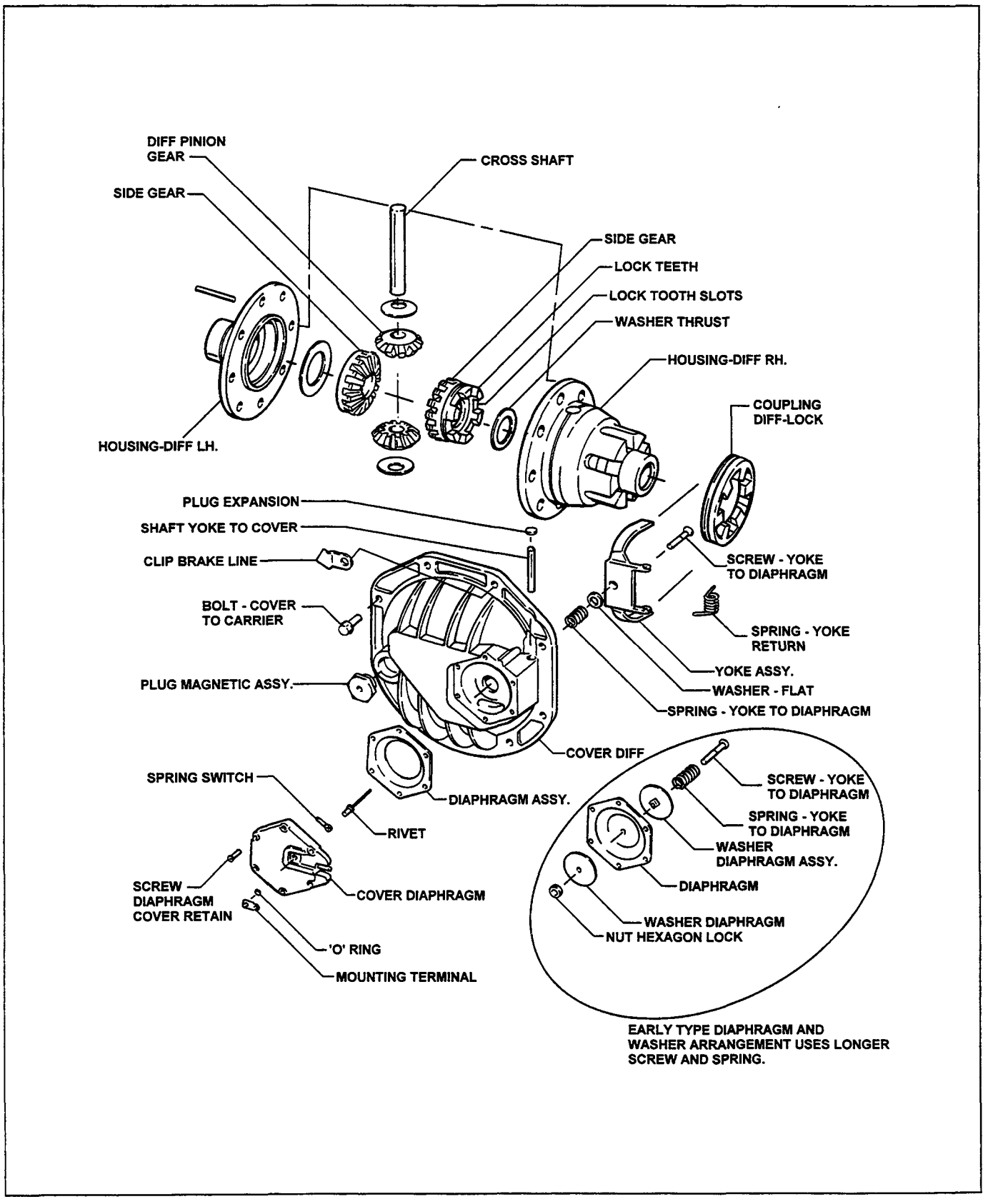

Figure 1

ELECTRICAL CONTROL SYSTEM

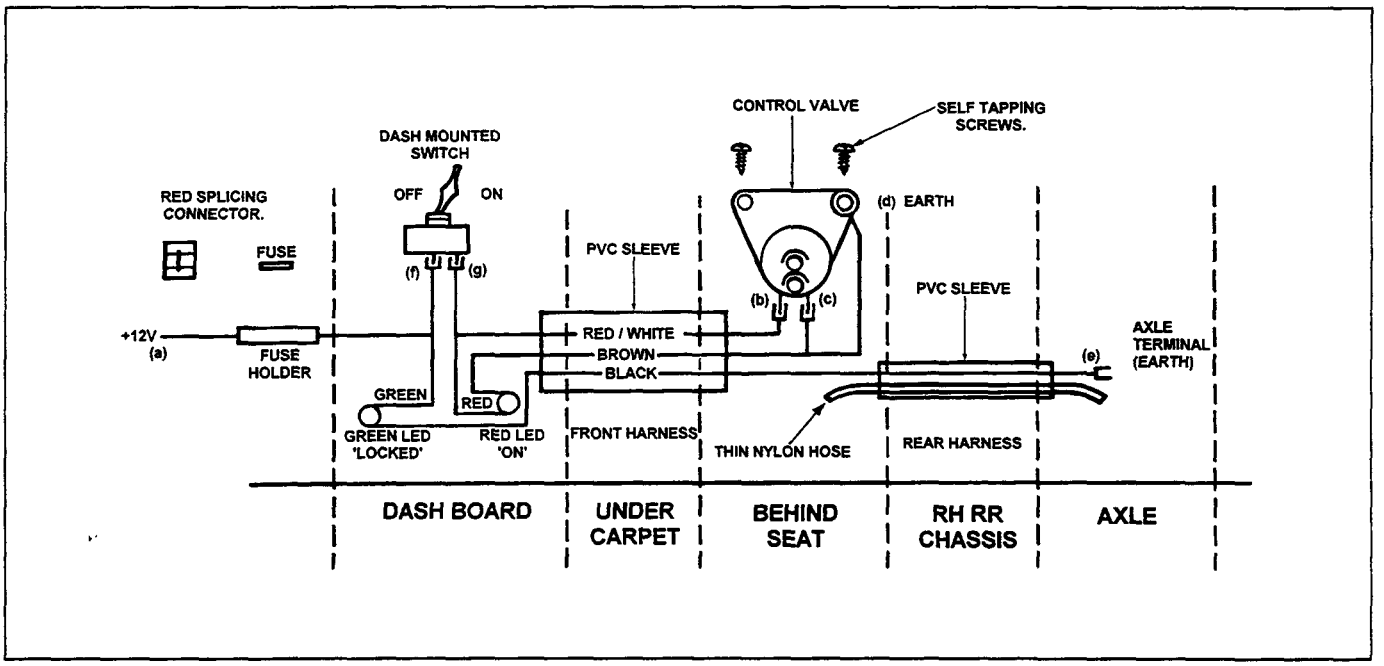

Figure 2A

PNEUMATIC CONTROL SYSTEM

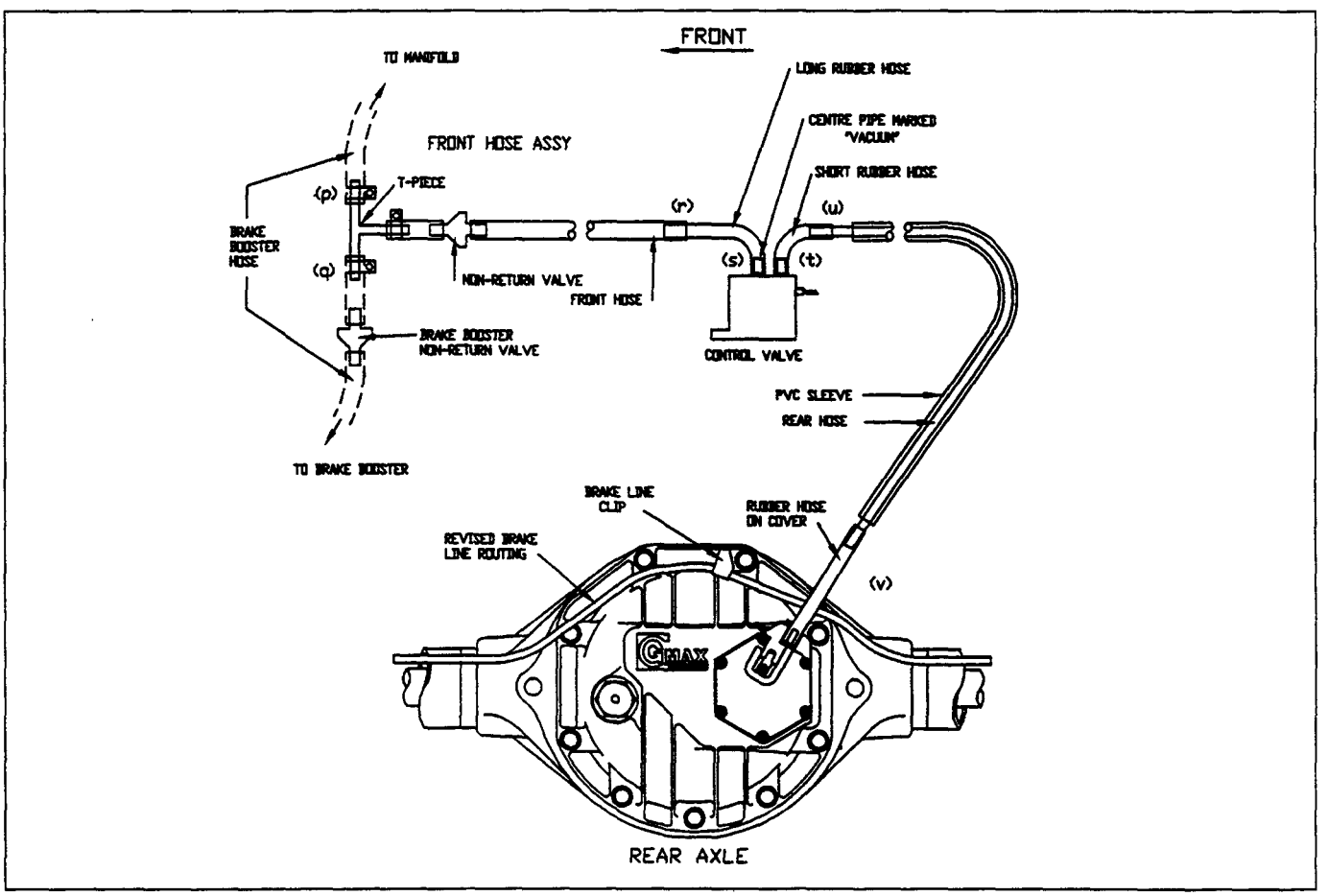

Figure 2B

SETTING YOKE 'OFF' POSITION AND CHECKING BETWEEN PINS DIMENSIONS

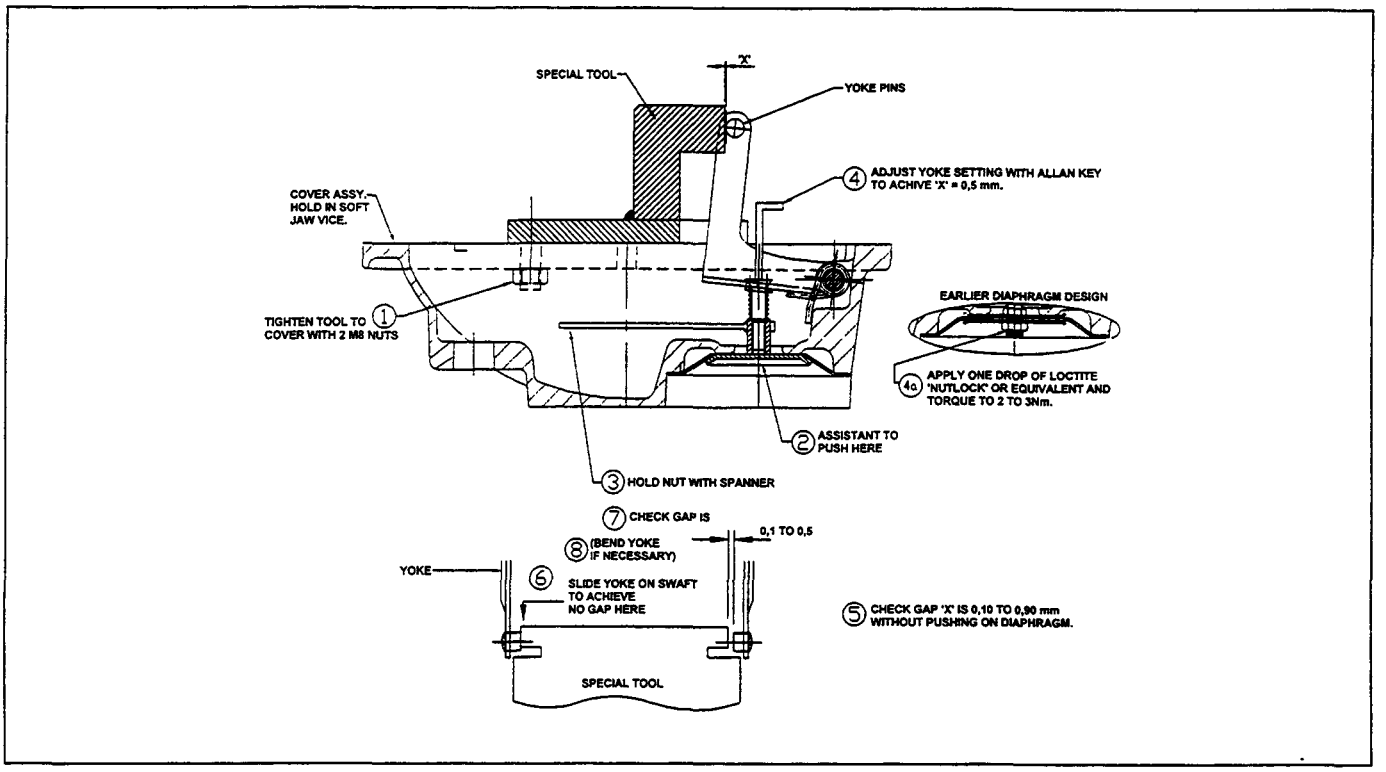

Figure 3

SETTING THE SWITCH SPRING POSITION

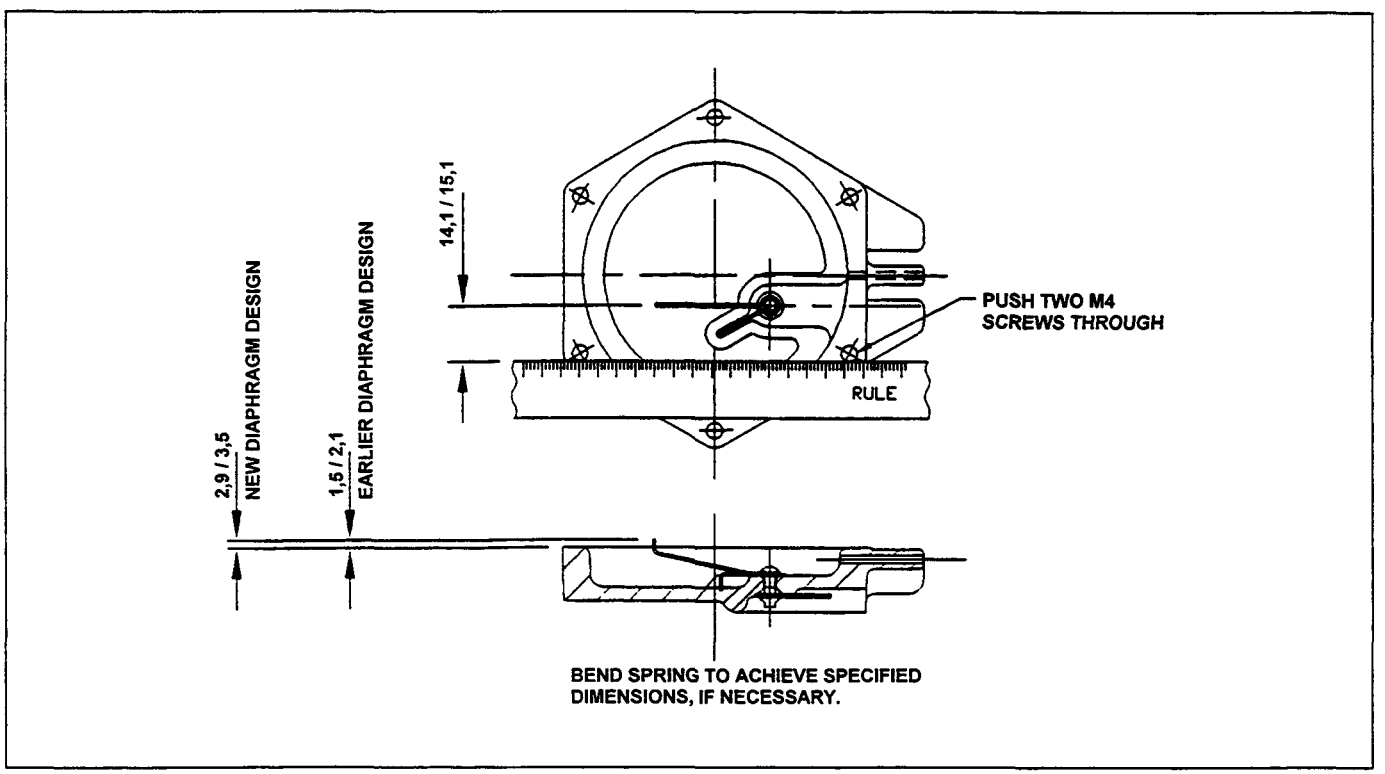

Figure 4

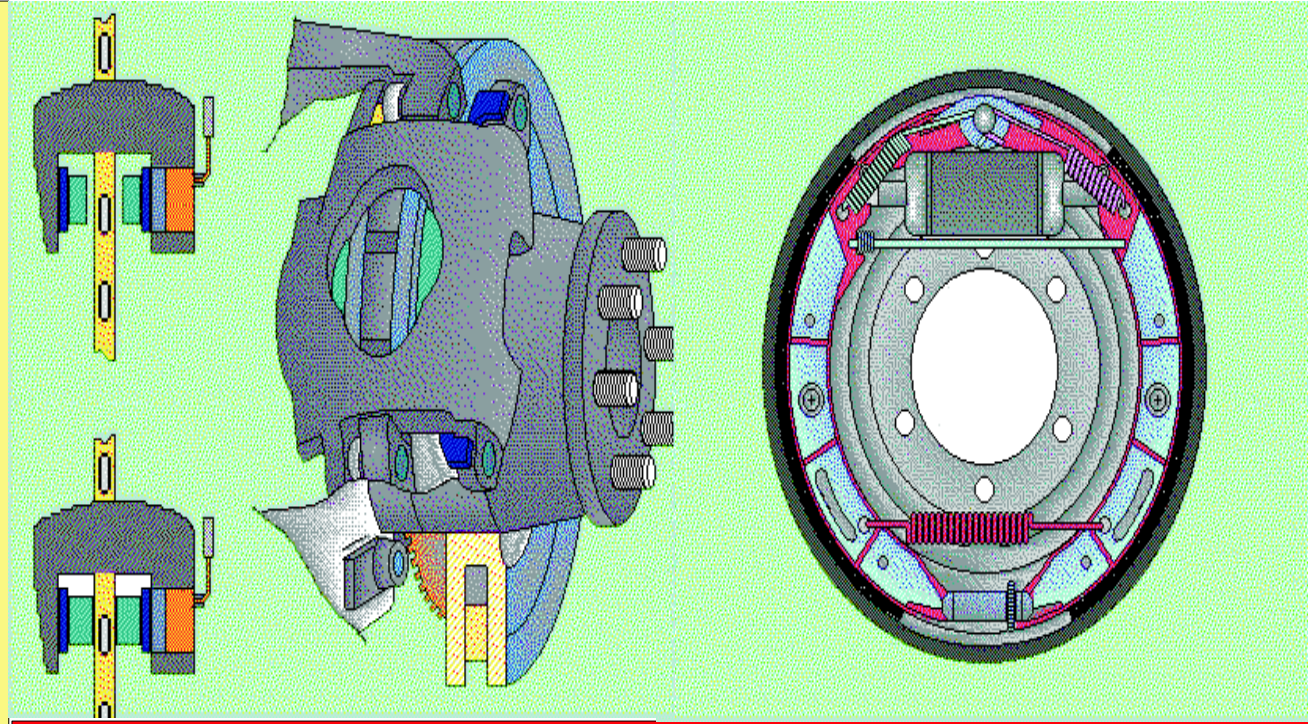

KB TF 140
Brakes

ISUZU

Main Index
Front Brakes
Rear Brakes
Master Cyl.
Vacuum
Park Brake
Servicing

SECTION 5
BRAKES

TABLE OF CONTENTS

	PAGE
General Description	5– 3
Main Data and Specifications	5– 8
Special Parts Fixing Nut and Bolt	5– 9
Servicing	5–15
Front Brake Assembly	5–28
Removal and Installation	5–28
Removal and Installation of Disc Pad	5–31
Disassembly	5–33
Inspection and Repair	5–35
Reassembly	5–37
Rear Drum Brake Assembly	5–39
Disassembly	5–39
Inspection and Repair	5–40
Reassembly	5–42
Brake Control	5–45
Removal and Installation	5–45
Master Cylinder	5–46
Removal and Installation	5–46
Disassembly	5–47
Inspection and Repair	5–49
Reassembly	5–51
Vacuum Servo	5–53
Removal and Installation	5–53

Parking Brake (Stem Type) 5–56
Removal and Installation 5–56
Disassembly and Reassembly 5–61
Inspection and Repair 5–63
Parking Brake (Floor Mount Type) 5–64
Removal and Installation 5–64
Troubleshooting 5–68

GENERAL DESCRIPTION

FRONT DISC BRAKE

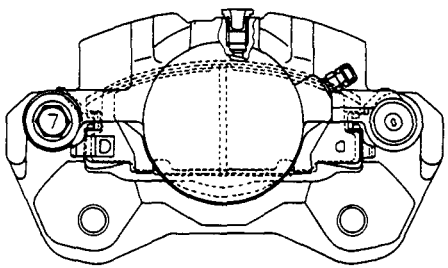

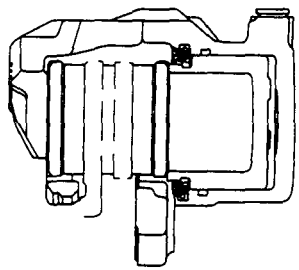

REAR DRUM BRAKE

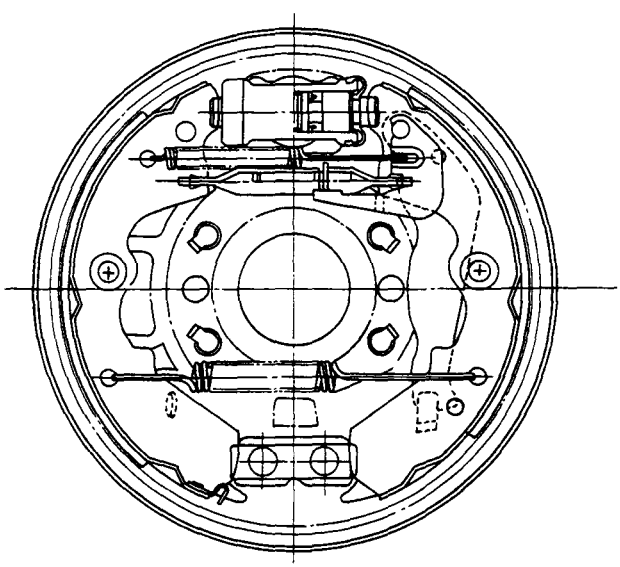

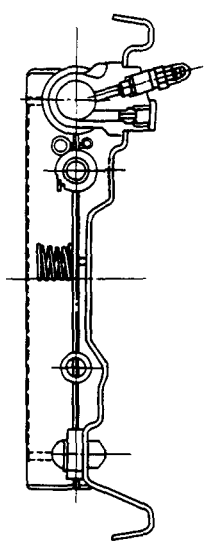

REAR WHEEL CYLINDER

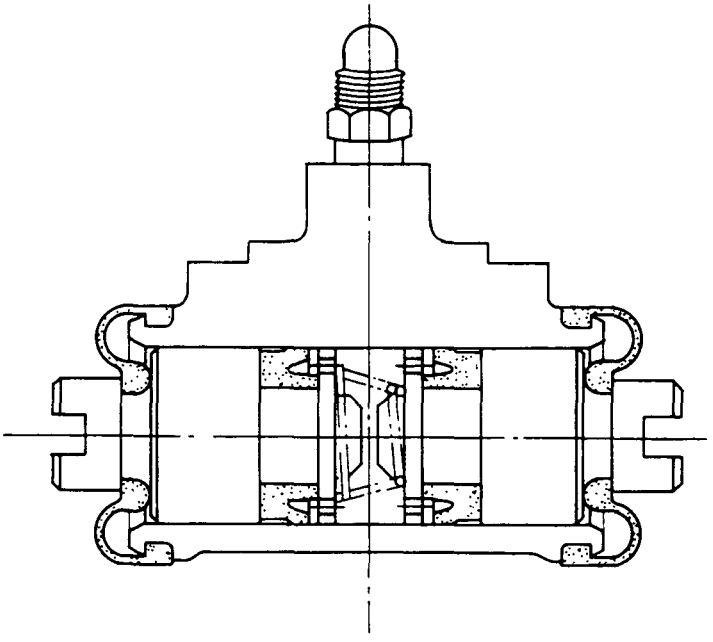

BLEND PROPORTIONING VALVE (EXCEPT FOR EUROPE AND SOUTH AFRICA)

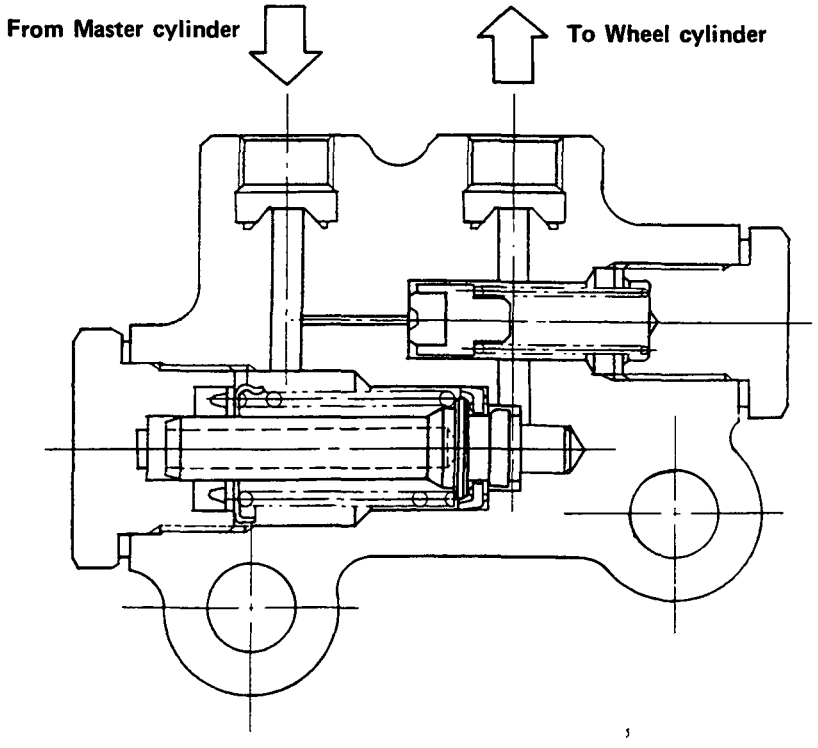

LOAD SENSING PROPORTIONING VALVE (LSPV) (FOR EUROPE AND SOUTH AFRICA)

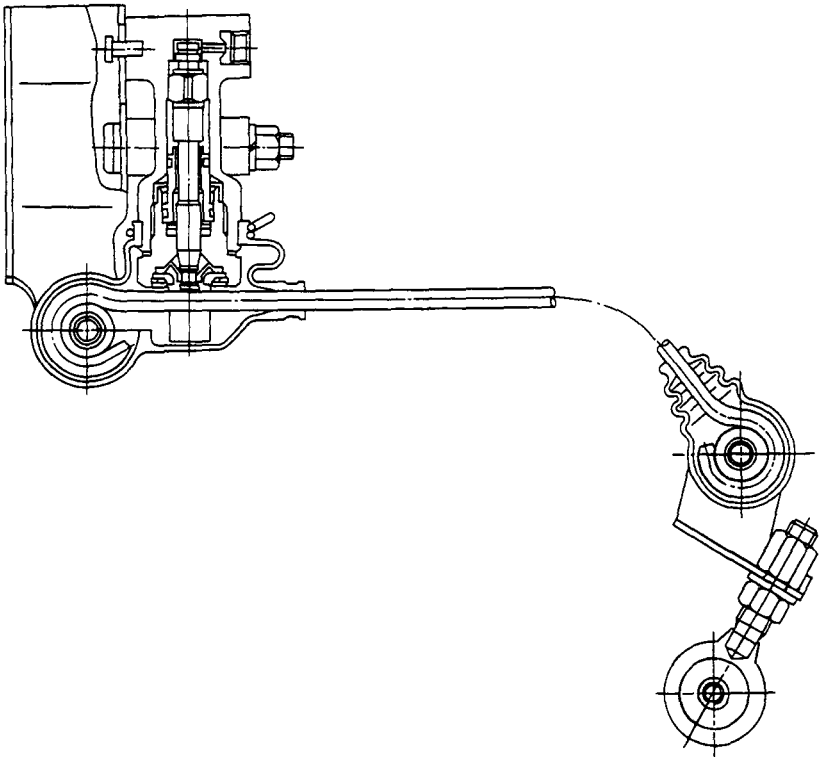

PIPING DIAGRAM (MODEL WITH BLEND PROPORTIONING VALVE)

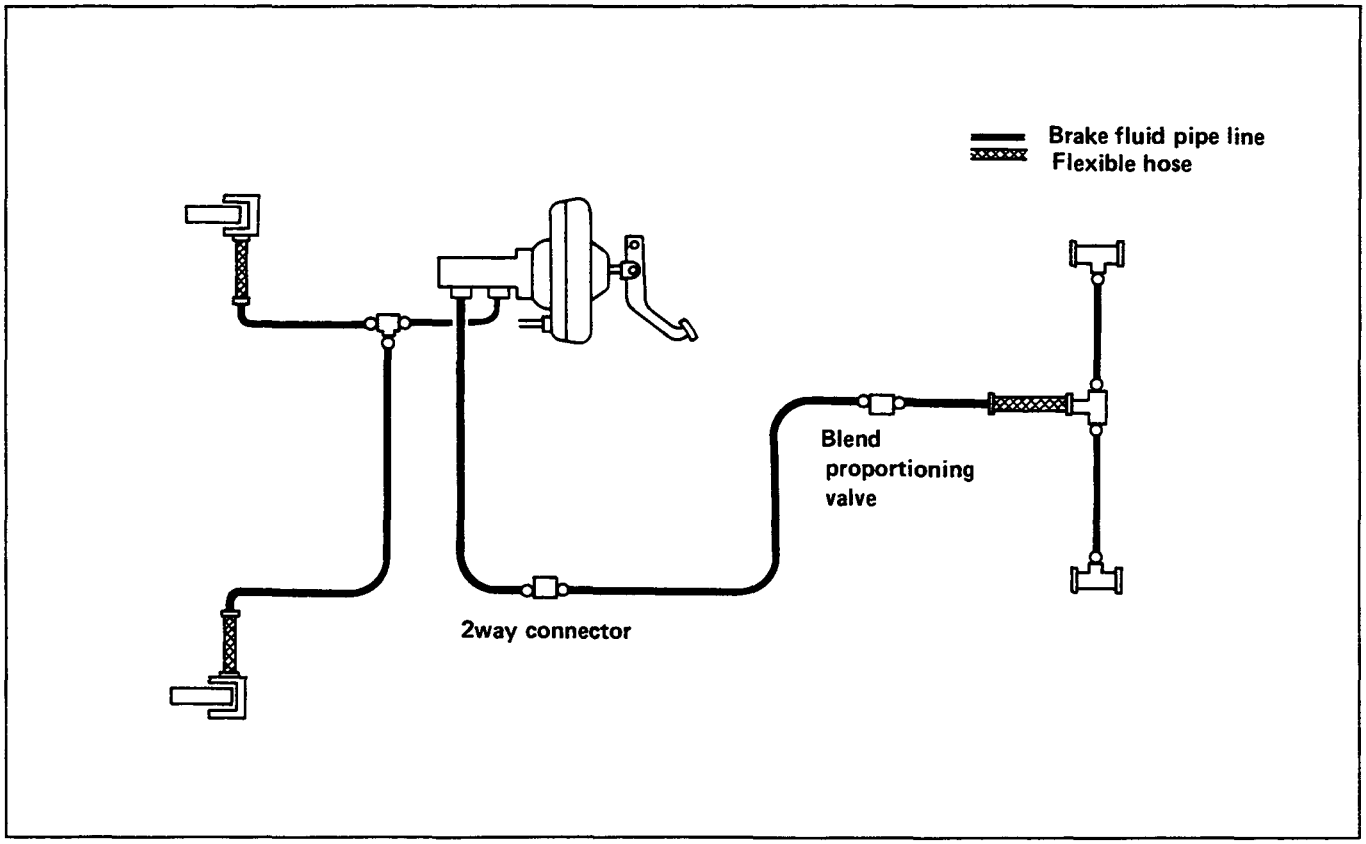

PIPING DIAGRAM (MODEL WITH LSPV)

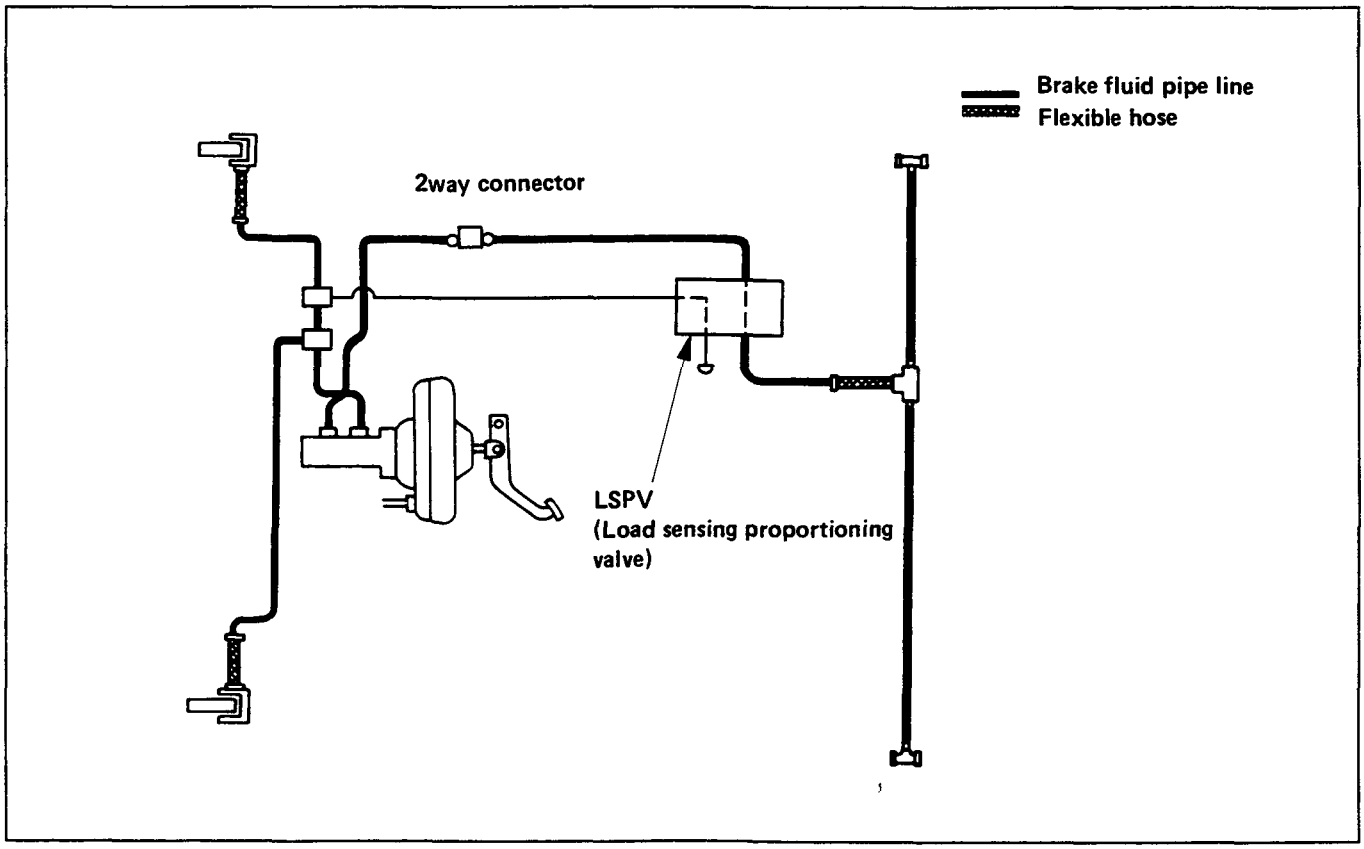

VACUUM SERVO WITH MASTER CYLINDER

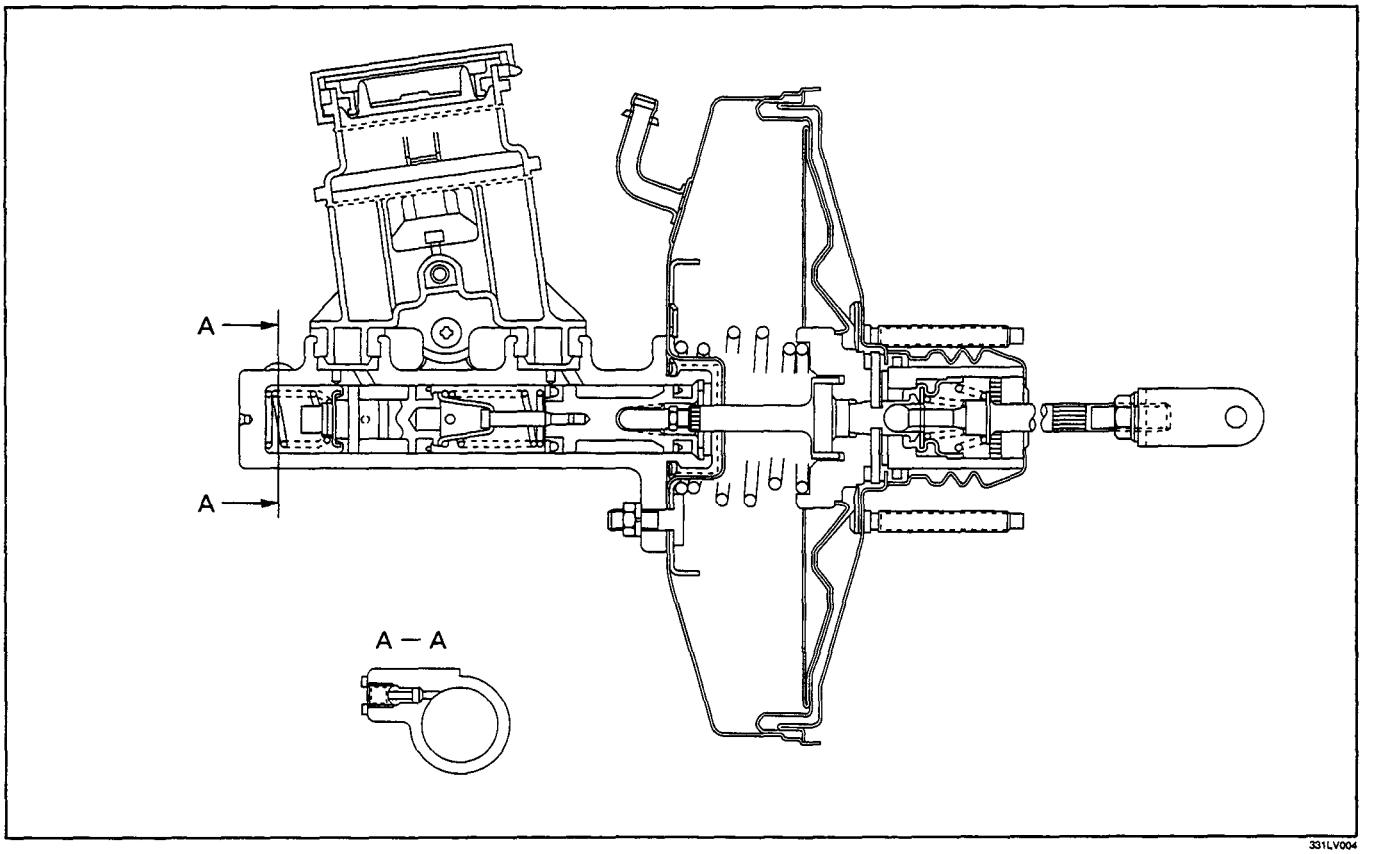

331LV004

VACUUM SERVO WITH MASTER CYLINDER (2.6L (4ZE1 engine) only Australia)

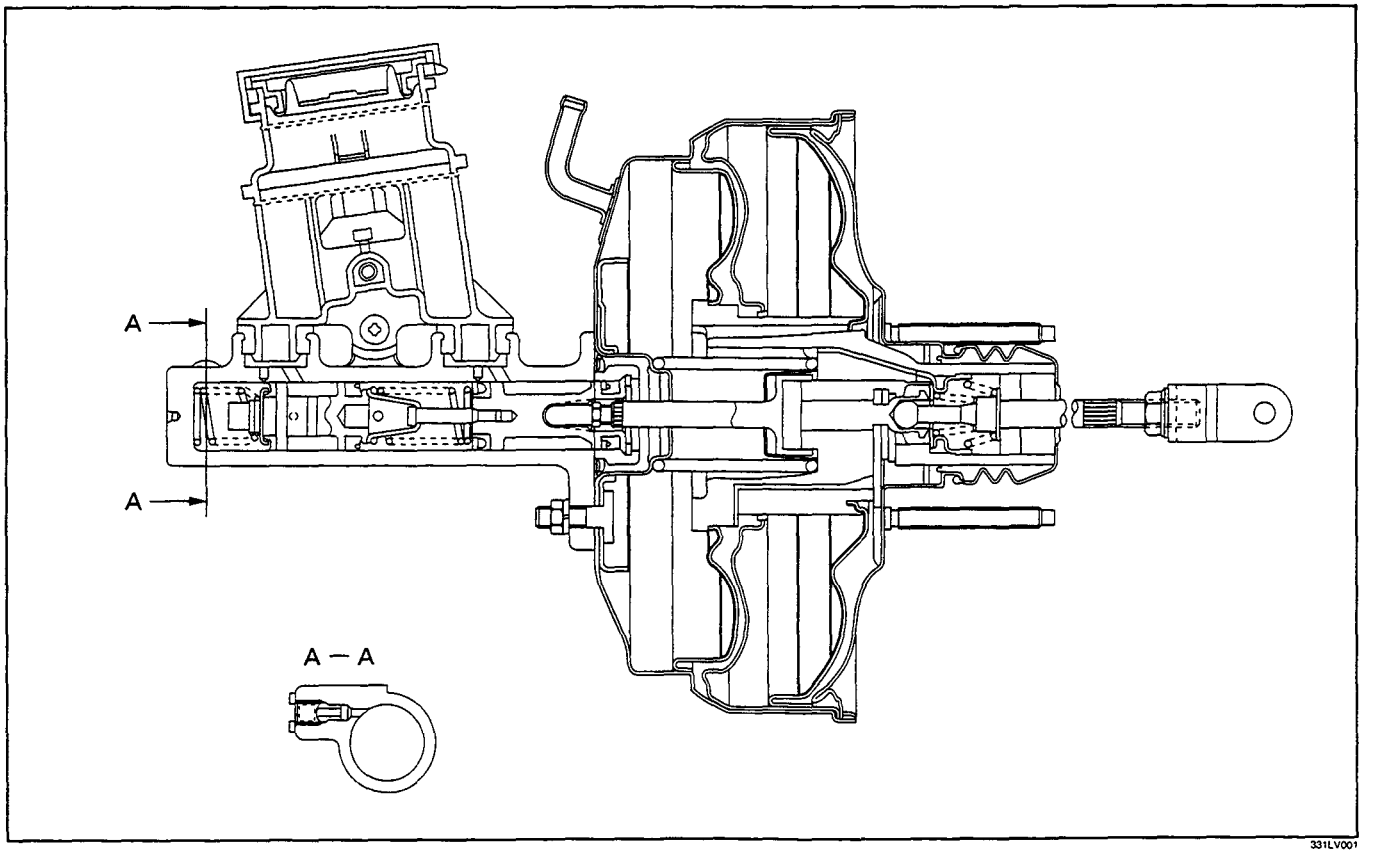

331LV001

MAIN DATA AND SPECIFICATIONS

FRONT DISC BRAKE	mm(in.)		
Caliper type		Pin slide	
Disc outside diameter		257 (10.118)	
Disc thickness		22 (0.866)	
Piston diameter		60.33 (2.375)	
Adjustment method		Self-adjusting	
REAR DRUM BRAKE	mm(in.)	4 x 2	4 x 4
Type		Leading and Trailing	
Drum inside diameter		254 (10.008)	295 (11.614)
Brake lining dimension		221 x 50 x 5	283 x 45 x 4
(Length x Width x Thickness)		(8.71 x 1.97 x 0.20)	(11.14 x 1.77 x 0.16)
Adjustment method		Self-adjusting	
WHEEL CYLINDER	mm(in.)		
Inside diameter : rear			
Europe and South Africa		25.40 (1.000)	
Others		22.22 (0.875)	
MASTER CYLINDER	mm(in.)		
Type		Split	
Bore diameter		23.81 (0.938)	
Piston stroke (Primary + Secondary)		19 + 12 (0.75 + 0.47)	
VACUUM SERVO	mm(in.)		
Diaphragm diameter			
Except 2.6L (4ZE1 engine) Australia		230 (9.055)	
2.6L (4ZE1 engine) only Australia		180 (7.087) + 205 (8.077)	
Power cylinder stroke		32.5 (1.281)	
PEDAL RATIO		4.04	
BALANCE			
Type		Blend proportioning valve/ Load sensing proportioning valve (For Europe, South Africa and Saudi Arabia)	

SPECIAL PARTS FIXING NUT AND BOLT

FRONT WHEEL BRAKE

kg·m (lb.ft/N·m)

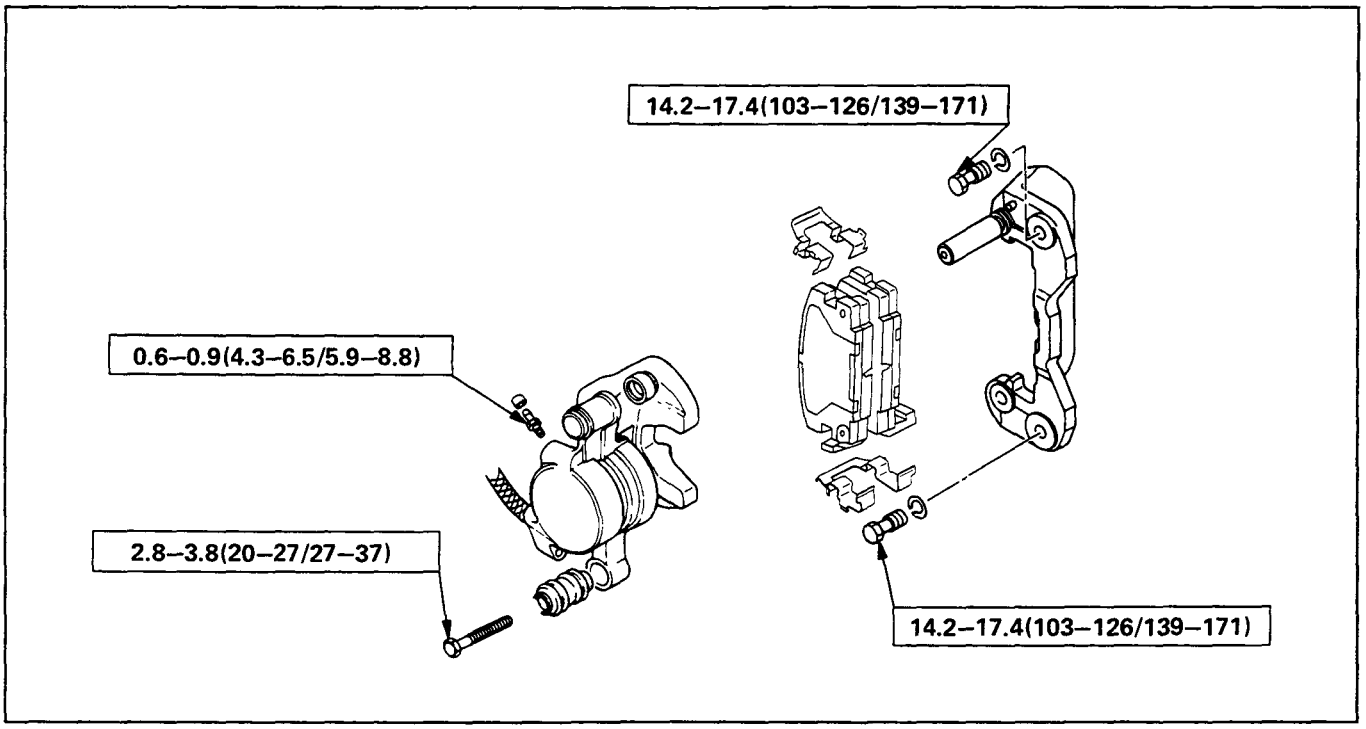

REAR WHEEL DRUM BRAKE

kg·m (lb.ft/N·m)

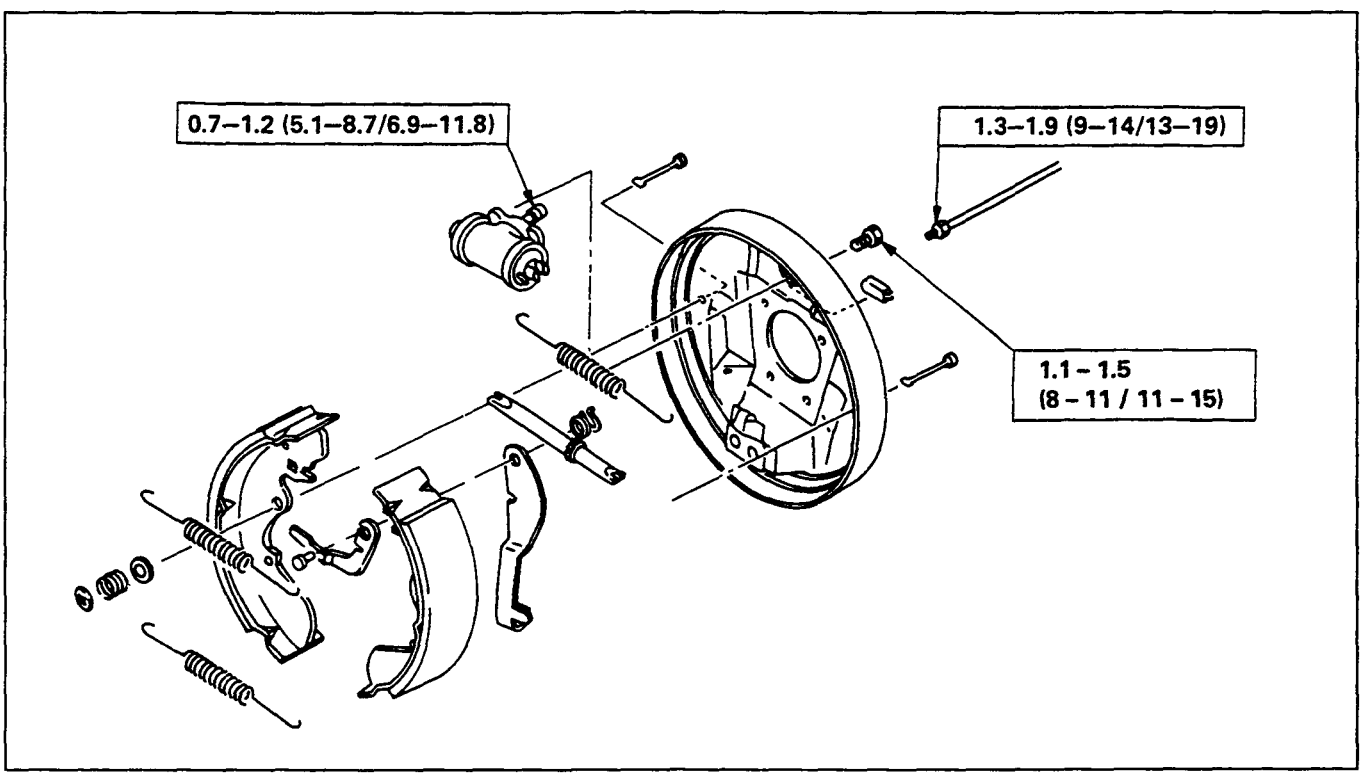

VACUUM SERVO WITH MASTER CYLINDER AND BRAKE PEDAL (Except 2.6L (4ZE1 engine) Australia)

kg·m (lb.ft/N·m)

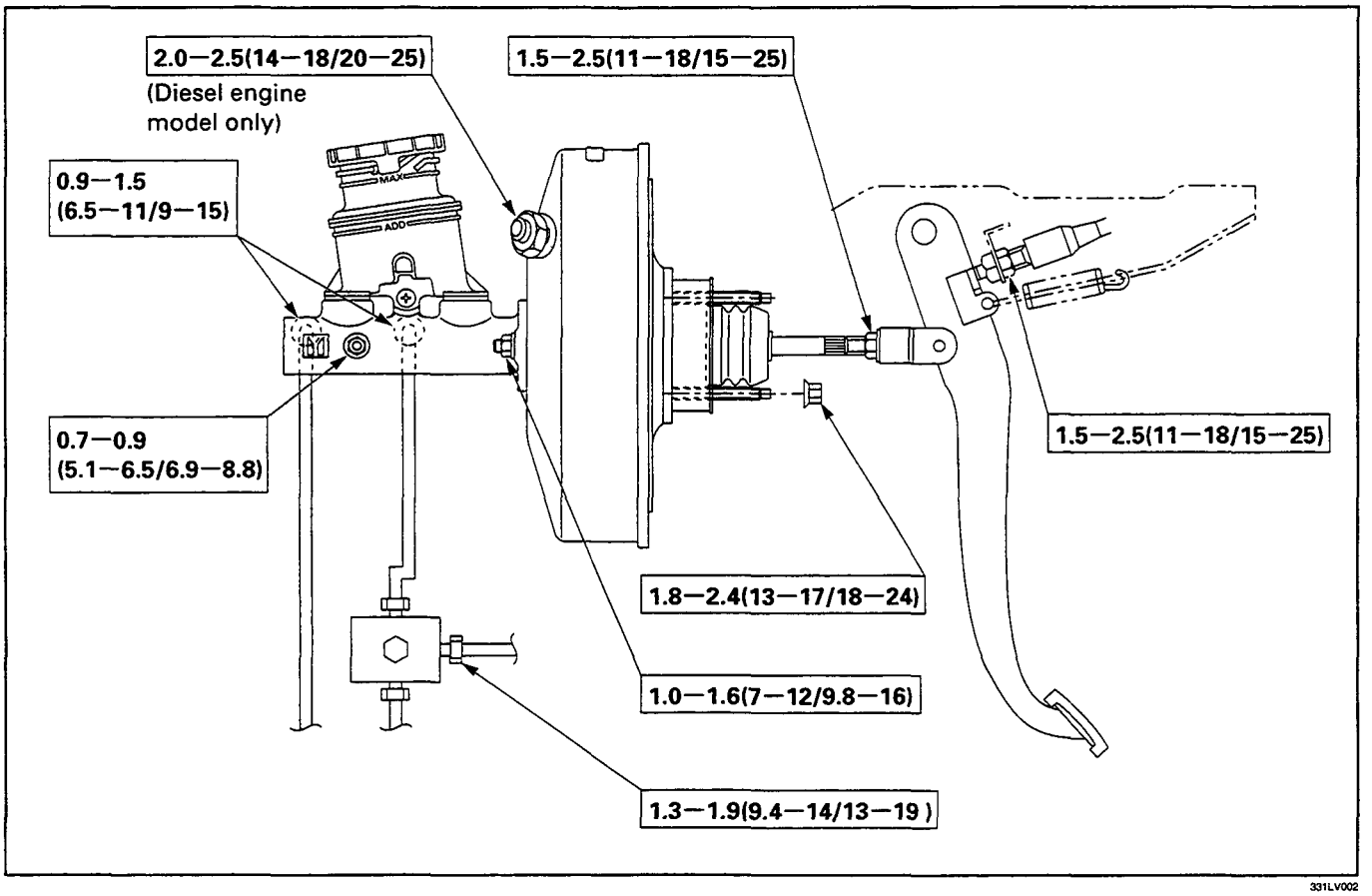

331LV002

VACUUM SERVO WITH MASTER CYLINDER AND BRAKE PEDAL (2.6L (4ZE1 engine) only Australia)

kg·m (lb.ft/N·m)

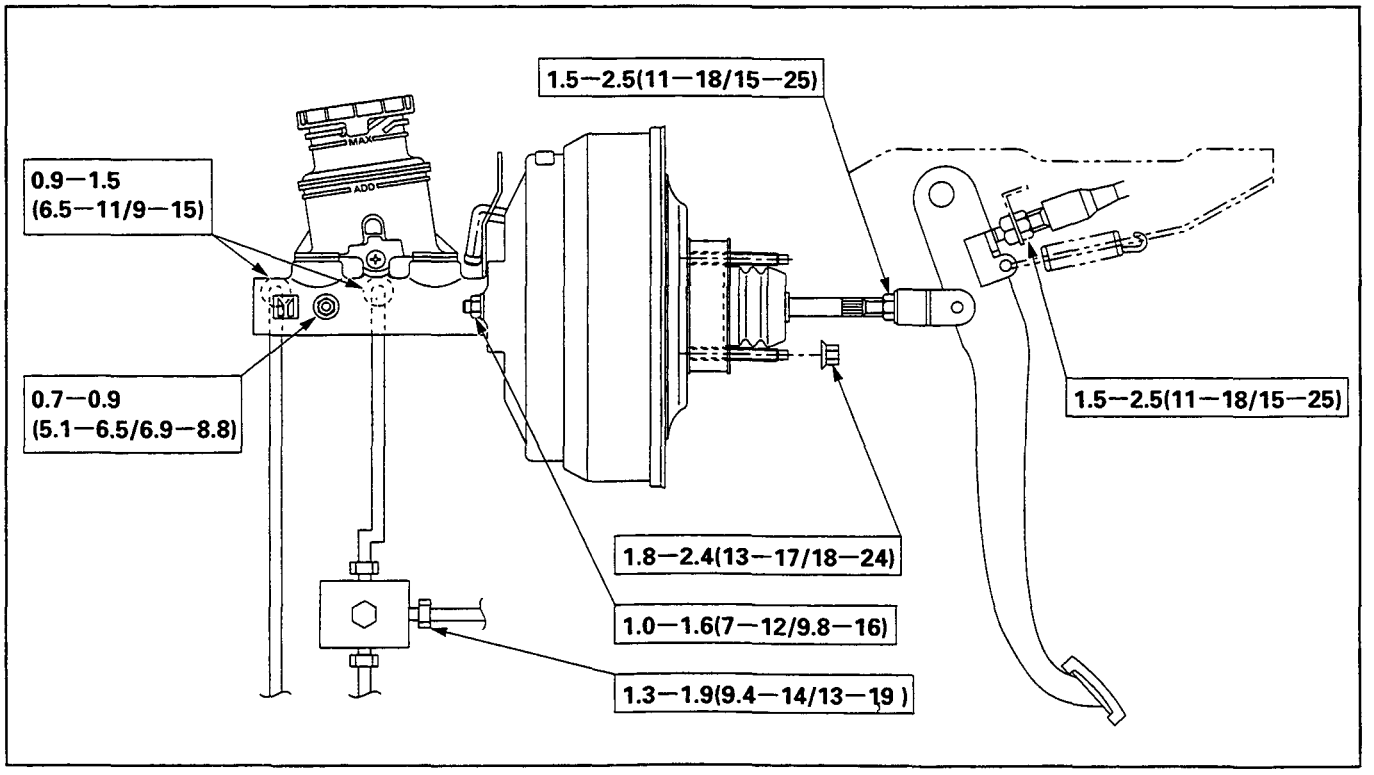

LOAD SENSING PROPORTIONING VALVE (FOR EUROPE, SOUTH AFRICA AND SAUDI ARABIA)

kg·m (lb.ft/N·m)

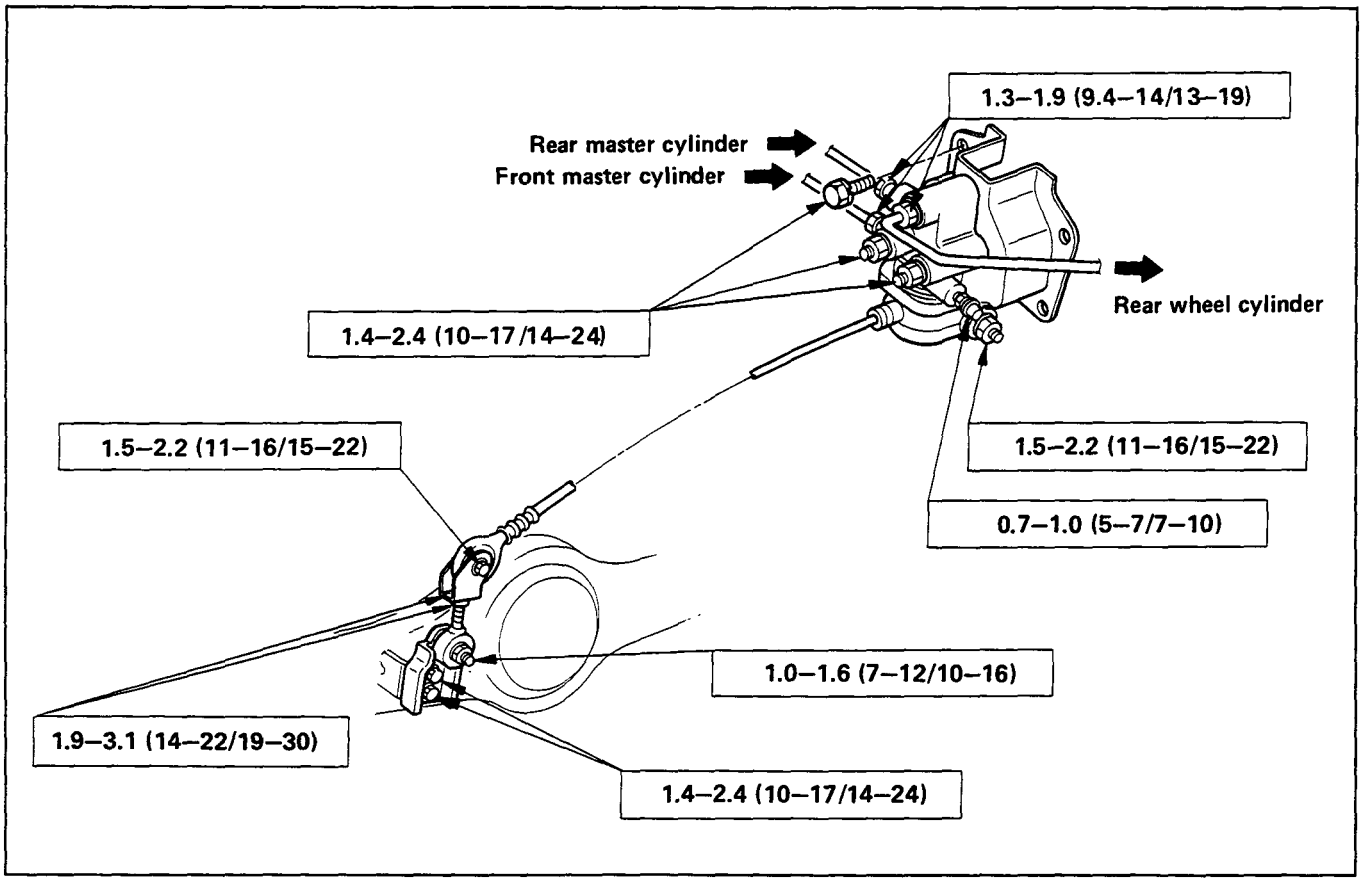

BLEND PROPORTIONING VALVE

kg·m (lb.ft/N·m)

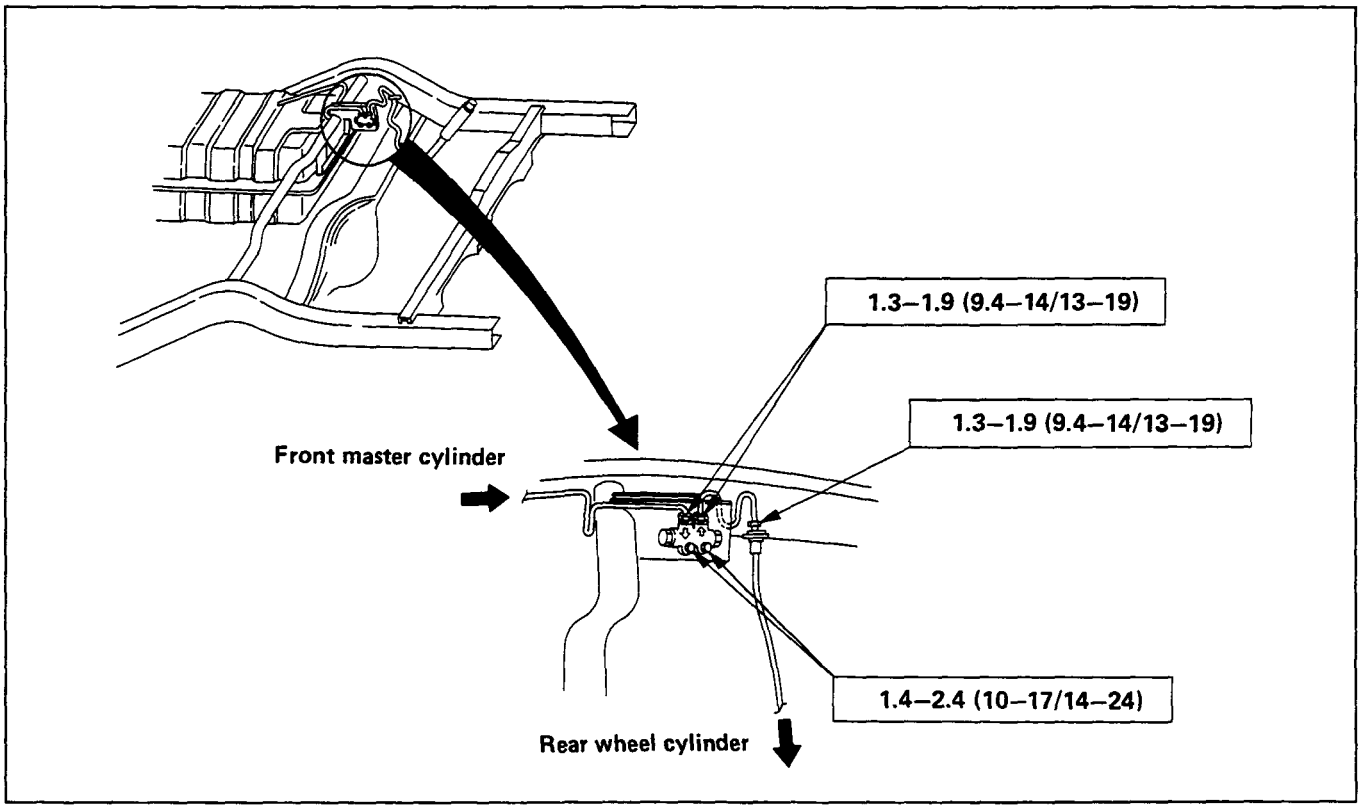

BRAKE PEDAL ASSEMBLY

kg·m (lb.ft/N·m)

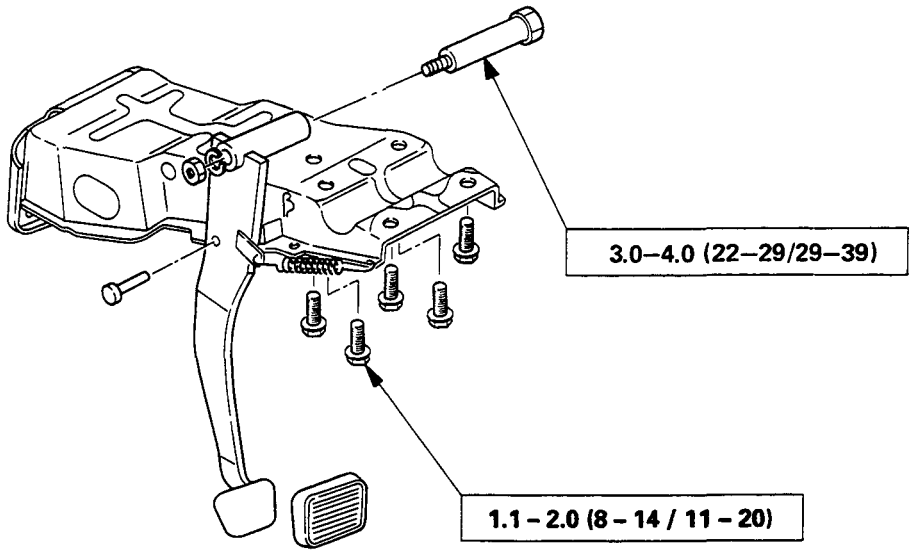

This illustration is based on the LHD model

PARKING BRAKE STEM ASSEMBLY (STEM TYPE, LEFT HAND DRIVE MODEL)

kg·m (lb.ft/N·m)

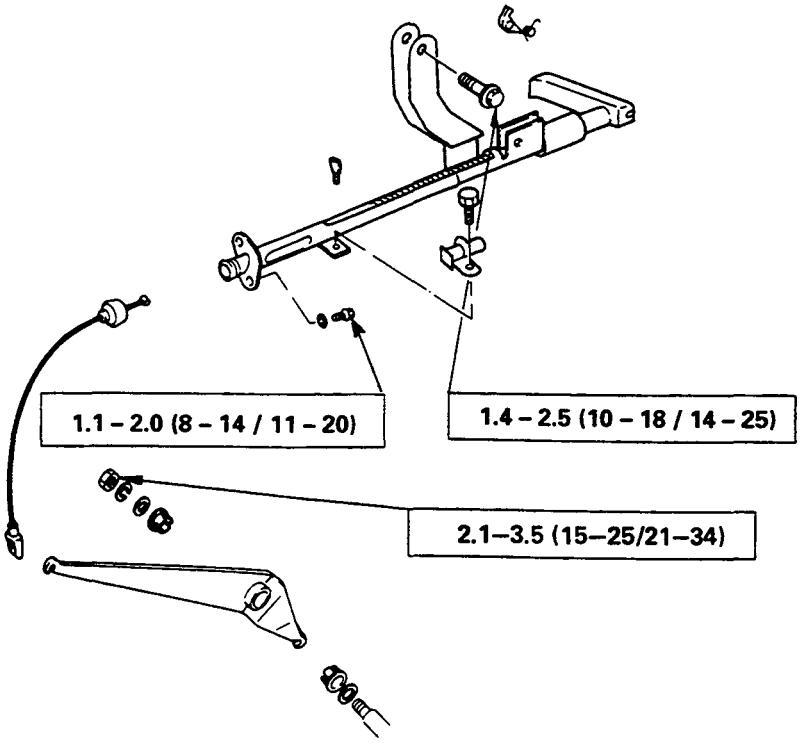

PARKING BRAKE STEM ASSEMBLY (STEM TYPE, RIGHT HAND DRIVE MODEL)

kg·m (lb.ft/N·m)

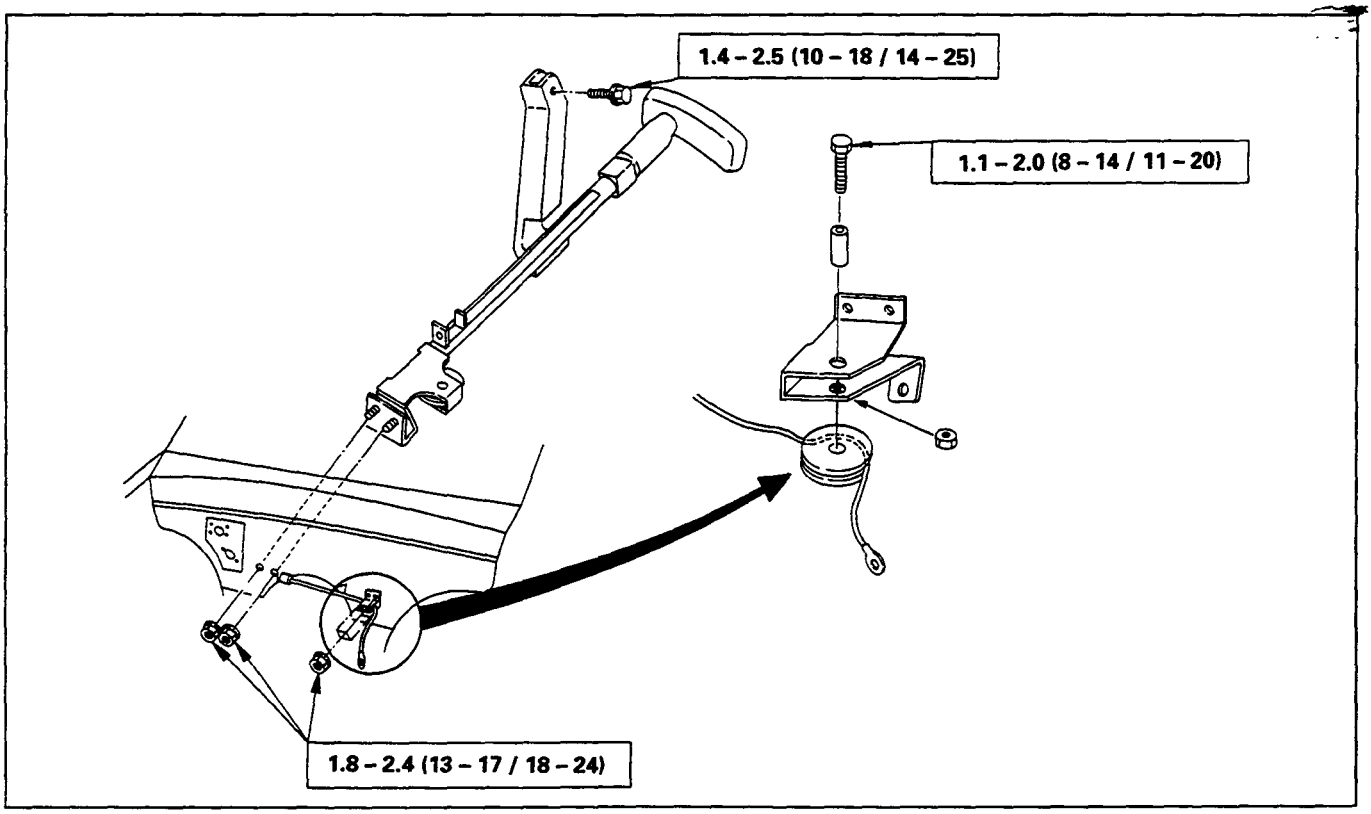

BRAKE LINES (HOSES AND PIPES) (MODEL WITH BLEND PROPORTIONING VALVE)

kg·m (lb.ft/N·m)

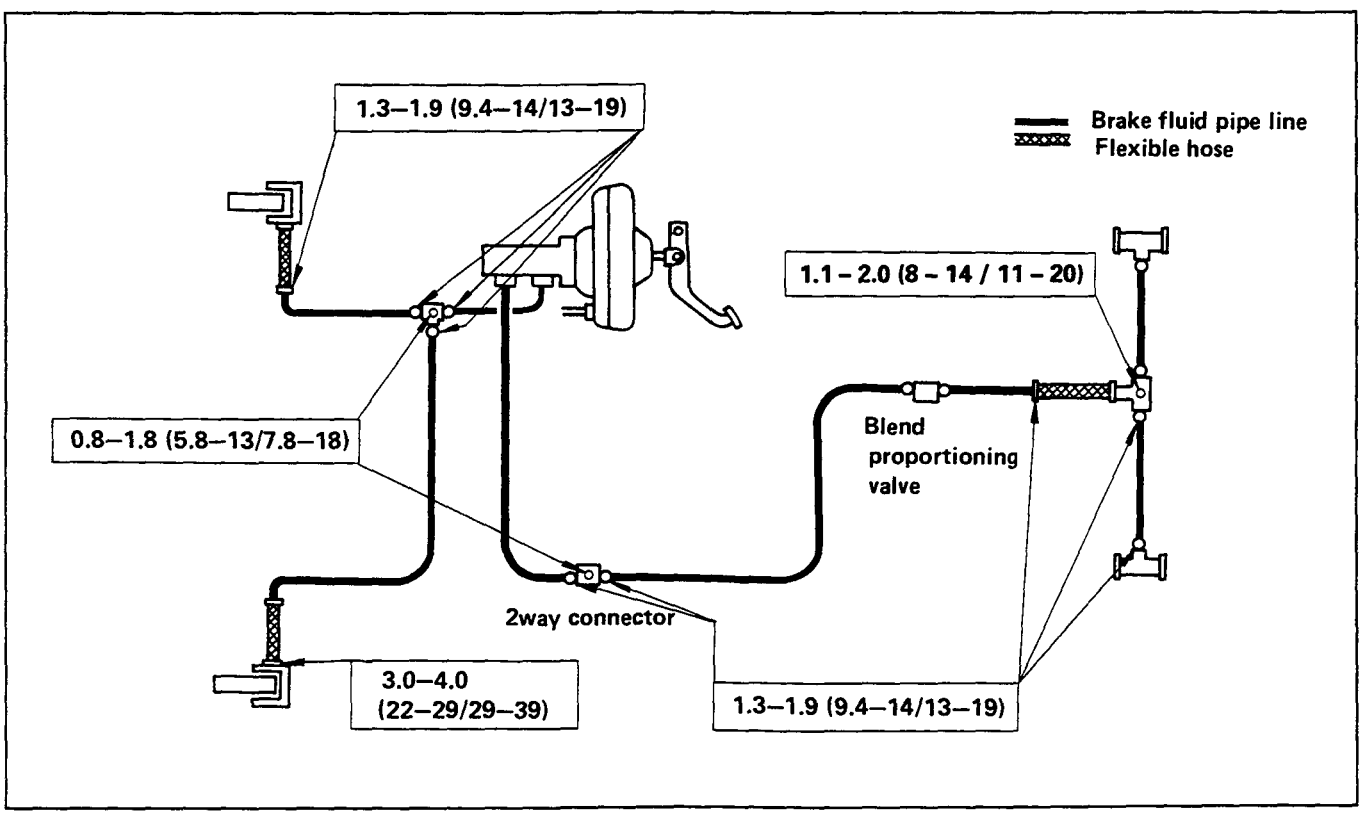

BRAKE LINES (HOSES AND PIPES) (MODEL WITH LSPV)

kg·m (lb.ft/N·m)

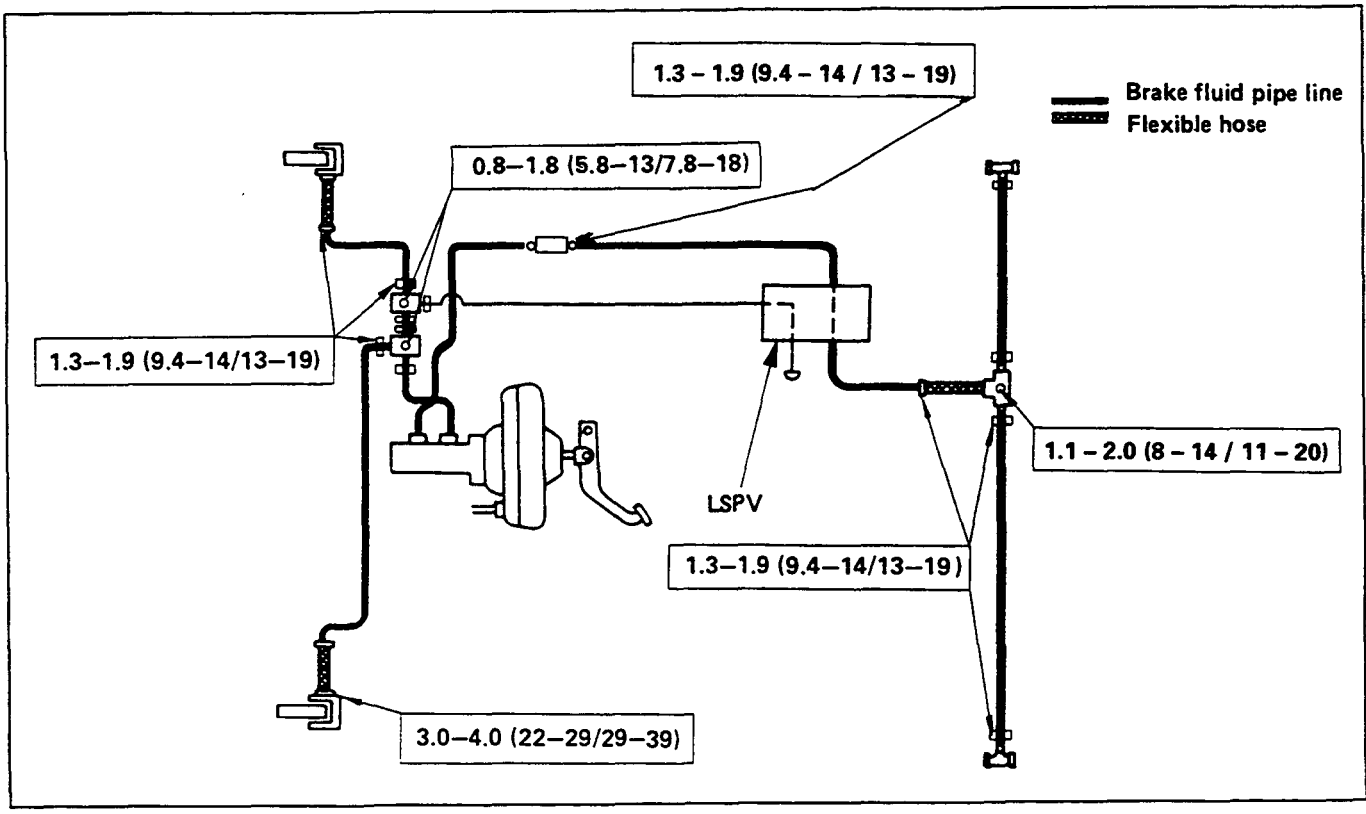

PARKING BRAKE LEVER ASSEMBLY (FLOOR MOUNT TYPE)

kg·m (lb.ft/N·m)

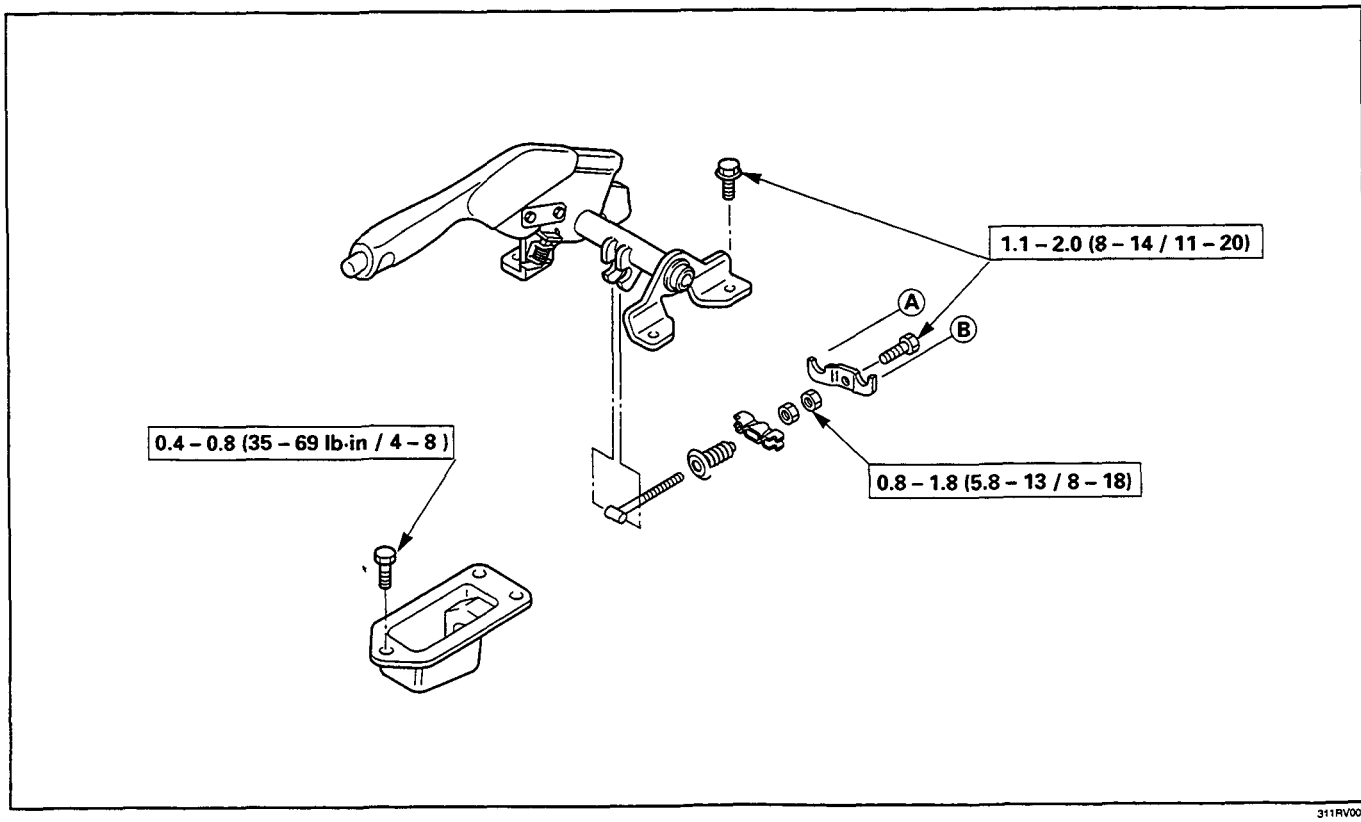

311RV00

SERVICING

LOAD SENSING PROPORTIONING VALVE (LSPV) (FOR EUROPE, SOUTH AFRICA AND SAUDI ARABIA)

Location of LSPV

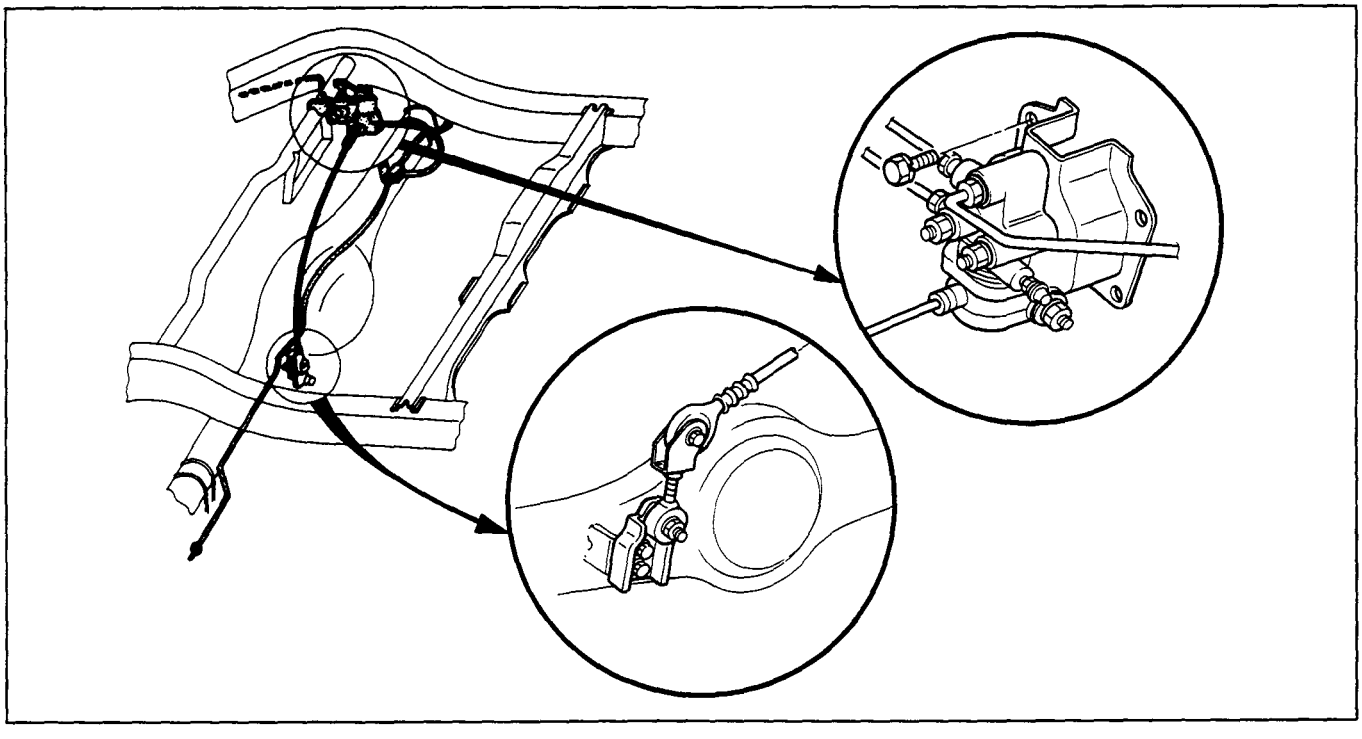

Structure and Operation

The following is an explanation of the structure and operation of the linkage type load sensing device. This device controls the fluid pressure to the rear brakes in accordance with changes in rear axle load (vertical displacements of the rear axle springs).

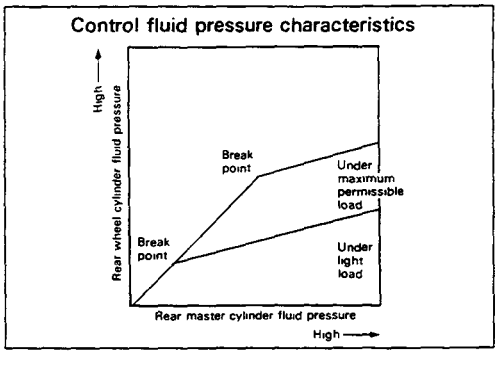

- Structure

  This device consists of a load sensing spring (bending bar) and a valve.
  The valve is mounted through a bracket to the frame.
  One end of the load sensing spring is fixed to the valve at the frame and the other end to the rear axle housing through a shackle.

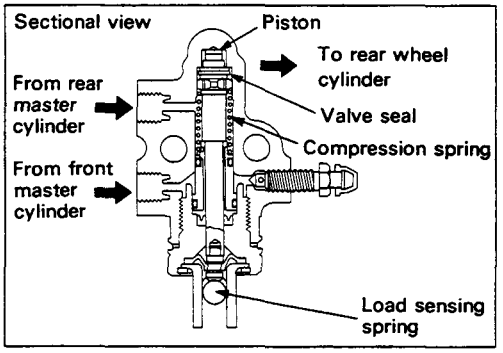

- Operation

1) Outline

When the L.S.P.V. (Load Sensing Proportioning Valve) detects a change in load weight, the load sensing spring deflects. Its reaction force is transmitted to the bottom of the load sensing valve to secure an optimum rear wheel cylinder fluid pressure break point in proportion to the actual load weight.
Besides, if the front brake system should fail, the device is designed to prevent the master cylinder fluid pressure from decreasing and to apply it directly to the rear wheel cylinder to obtain a sufficient braking performance.

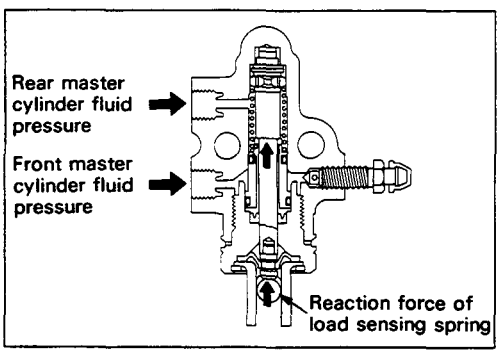

2) Operation

(1) When the fluid pressure is under the break point.
The fluid pressure of the rear master cylinder passes through a clearance between the valve seal and the piston and acts on the rear wheel cylinder. At this moment, a downward force is applied to the piston. However, the compression spring force and reaction force of the load sensing spring keep the piston in the upper position by pushing upwards (See the left figure.)

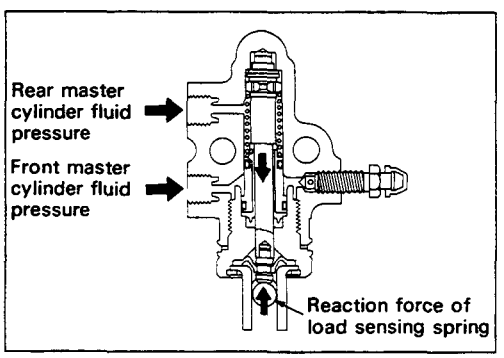

(2) When the fluid pressure is equal to the break point.
As the rear wheel cylinder pressure increases, it surpasses the compression spring force and reaction force of the load sensing spring, causing the piston to move downwards, so that the piston butts against the valve seal to shut off the fluid line between the master cylinder and rear wheel cylinder. (See the left figure.)

(3) When the fluid pressure is over the break point.
When the fluid pressure increases further, the piston moves upwards. The moment the piston comes apart from the valve seal, fluid pressure is applied to the rear wheel cylinder and the piston moves downwards so that the fluid line is shut off again. This process goes on repeatedly to control the fluid pressure to the rear wheel cylinder.

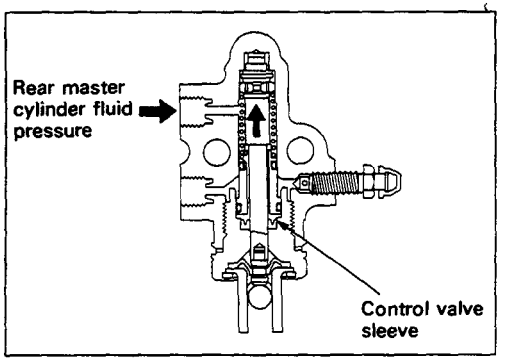

(4) When the front brake system fails.
When there is a failure in the front brake system, the fluid pressure from the front master cylinder decreases. As a result, the balance between the front and rear brake side fluid pressures is lost at the control valve sleeve so that the control valve sleeve moves upwards.
The control valve sleeve strikes against the piston, thereby pushing the piston upwards. Accordingly, the fluid pressure of the rear master cylinder is not decreased and is applied directly to the rear wheel cylinder to secure a sufficient braking performance of the rear brakes. (See the left figure.)

Valve Maintenance

In the case of fluid leak or other abnormalities, faulty valve should be replaced.

Note:

The load sensing proportioning valve is not repairable and must be replaced as a completed assembly.

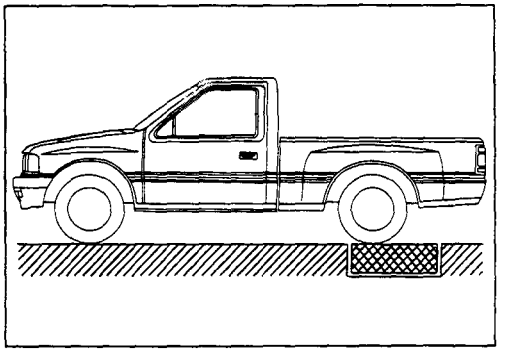

ADJUSTMENT PROCEDURE OF LSPV (FOR EUROPE AND SOUTH AFRICA)

This adjustment should be performed with the battery voltage applied to the valve.

1. Adjust the rear axle weight by loading the rear body as necessary.

Rear axle weight	kg (lbs)
650 (1,433)	

Note:

The rear axle weight should be adjusted to the specified value with a man seated in the driver seat.

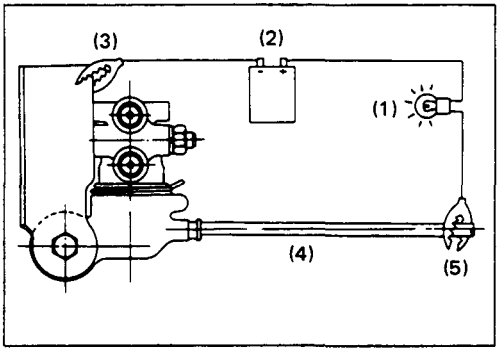

2. Connect the wiring with miniature lamp (1) and a battery (2) between valve bracket (3) and linkage (4) with each end of wiring clipped. This wiring is necessary to find the moment at which piston within the valve assembly is brought into connect with the linkage.

Note:
As the linkage is coated with insulation material, turn the clip (5) with 2 or 3 turns to break insulation.

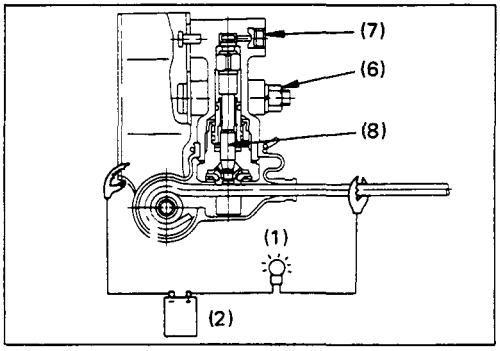

3. Loosen the nut (6) and raise the valve assembly (7) all the way. Then lower the valve assembly gradually and tighten the nut (6) when miniature lamp (1) turns on.

Torque	kg·m(lb.ft/N·m)
1.7 (12/17)	

Note:
If the miniature lamp (1) goes out as the nut (6) is tightened, lower the valve assembly (7) slightly with the nut loosened, then retighten the nut (6).

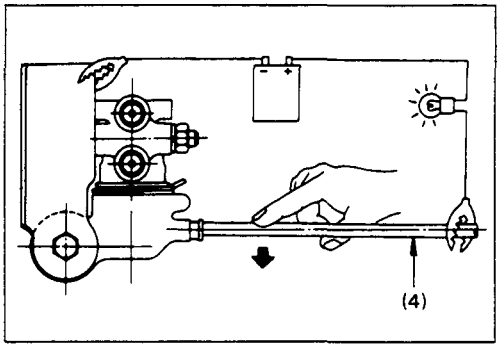

4. Depress the linkage (4) near the valve assembly slightly downward with finger (test pressure : 0.5 – 0.8 kg) and check to see if the miniature lamp (1) goes out.

   Lamp goes out : OK Adjustment is completed.
   Lamp remains on : NG Repeat adjustment operation outlined under paragraph 3. Excessive force is exerted on linkage by piston (8) within the valve assembly.

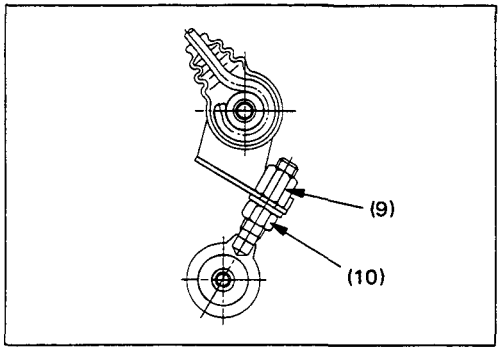

Note:
Adjustment can also be made by means of nuts (9) and (10) on shackle at rear axle case side. However, shackle nut is not normally used for adjustment as it is for making fine adjustment.

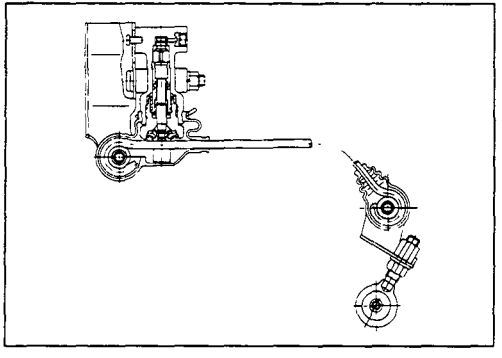

5. Inspection of brake fluid pressure (Reference value)
   1) Adjust the rear axle weight as specified under the paragraph 1.
   2) Install the pressure gauge on bleeder screws on the front and rear brakes.
   3) Depress the brake pedal and take reading of the pressure gauges. The brake fluid pressure is normal if the pressure of fluid within the rear wheel cylinders is within the range of 34.4 ±5.5 kg/cm^2 when pressure of fluid within the front wheel cylinders reaches 50 kg/cm^2.

Note:
The brake pedal should be depressed gradually until specified pressure is reached without pumping or adjusting foot pressure.

BLEND PROPORTIONING VALVE (IF SO EQUIPPED)

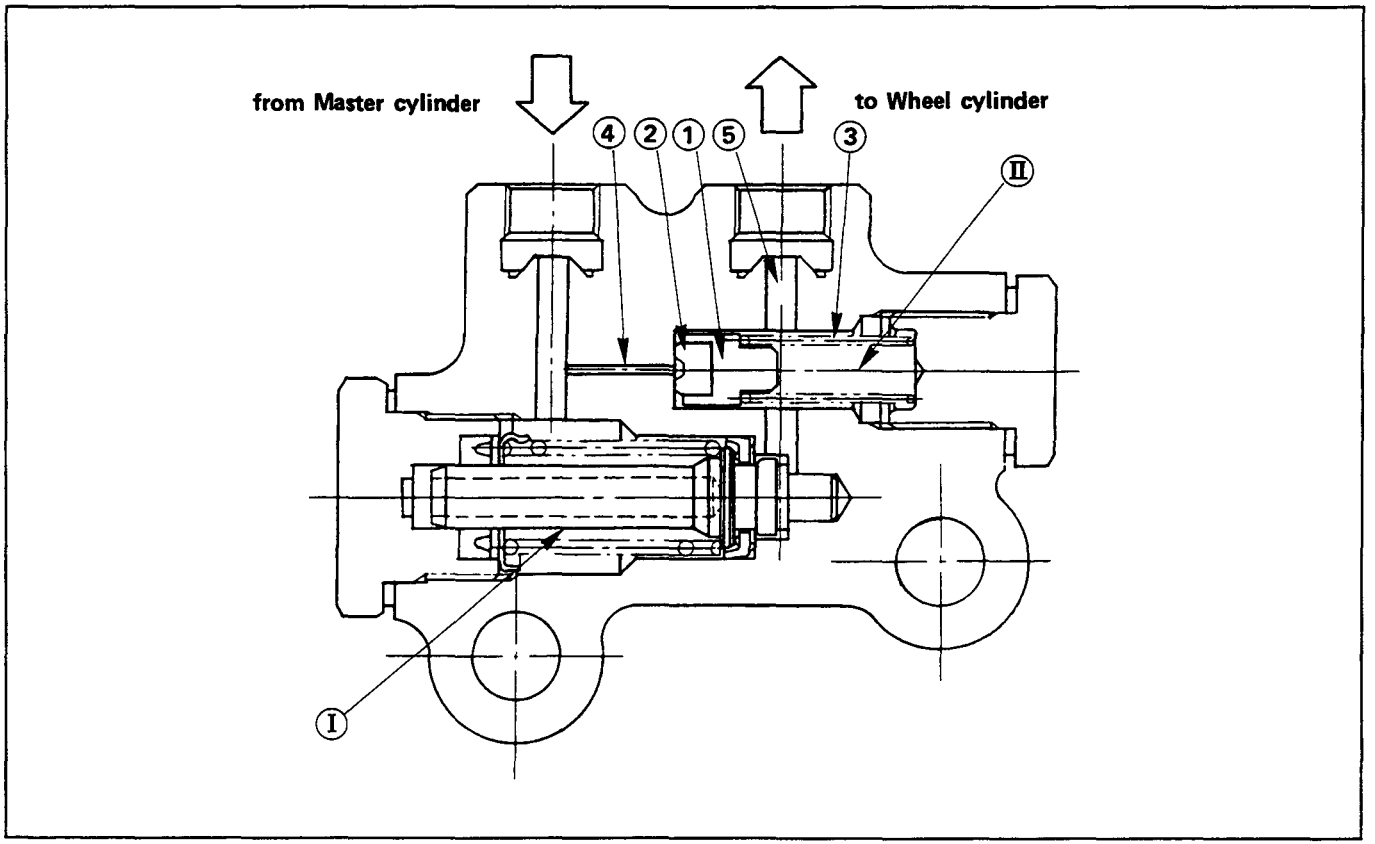

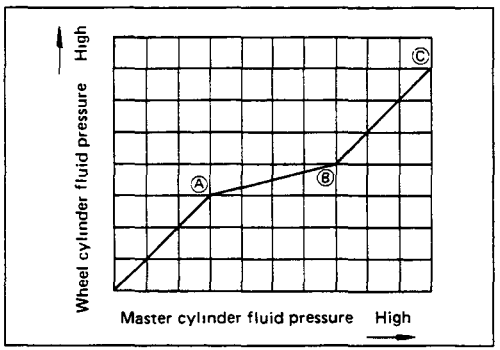

Structure and Operation

- Structure

  Side Ⅰ shows P-valve ; side Ⅱ shows bypass valve. Bypass valve seals the routes ④ and ⑤ using the seal ② at the piston ① end. In addition, spring ③ presses against the piston ①, and in order to seal out the route ④ and route ⑤ sufficiently, spring ③ presses seal ② against cylinder end surface. The left figure is a characteristic curve diagram.

- Operation

  The operation of the P-valve by the master cylinder pressure is unchanged up to the brake points Ⓐ and Ⓑ. If master cylinder fluid pressure penetrates into the second break point Ⓑ, the fluid pressure pressing against the seal ②, (which isolated route ④ and route ⑤), passing the route ④ of the master cylinder side, overcomes the operating force of the spring ③ + fluid pressure affecting the seal ② of the wheel cylinder, and presses the piston ① to the right side, resulting in the opening of the routes ④ and ⑤, and canceling of the P-valve operation.
  Then, because the master cylinder fluid pressure and the wheel cylinder fluid pressure, up to the point Ⓒ, operate on the identical surface of the seal ②, both have identical ascending ratio.

  However, because of the operation of spring ③ in the wheel cylinder side, wheel cylinder fluid pressure operate to preserve the balance against the master cylinder fluid pressure on the lower level with the difference in pressure resulting from this spring.

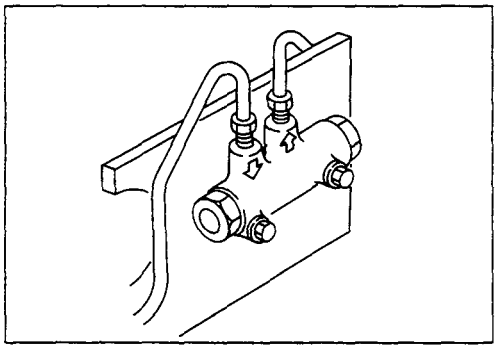

Valve Maintenance

In the case of fluid leak or other abnormalities, faulty valve should be replaced.
The valve is set up at the right hand side of the 5th crossmember near the rear axle.

Note:
The blend proportioning valve is not repairable and must be replaced as a complete assembly.

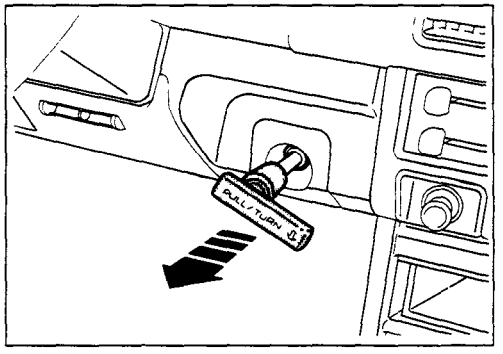

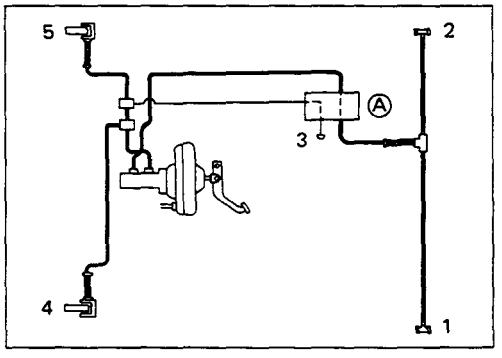

BLEEDING OF THE BRAKE HYDRAULIC CIRCUIT

If air enters the brake lines, it will cause poor brake action. Therefore, bleeding should be performed if the brakes have been used with the level of brake fluid in the reservoir excessively low or if brake pipes have been disconnected in the course of brake servicing. Bleeding operation calls for co-operative action of 2 persons.

- Set the parking brake firmly while bleeding.
- Perform bleeding operation with ENGINE RUNNING, to prevent damage to push rod seal. Make sure exhaust is suitably ventilated.
- Bleed the hydraulic system with the fluid reservoir filled to the specified level.
- Bleed the system starting with the rear wheel cylinder farthest from the master cylinder.

Ⓐ: Load sensing proportioning valve (If so equipped).

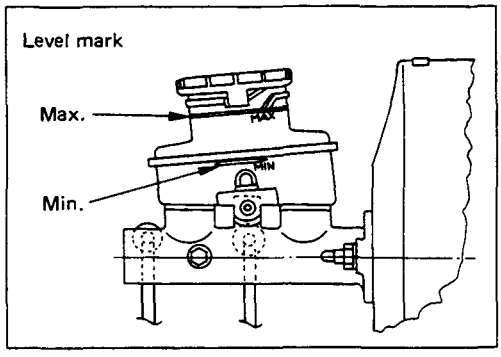

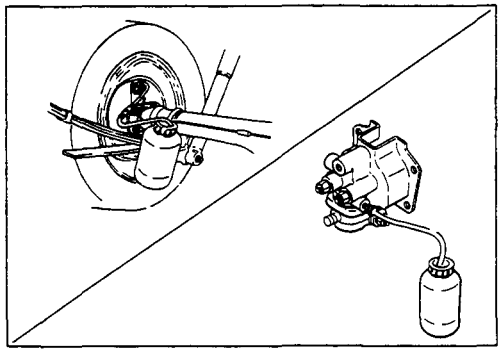

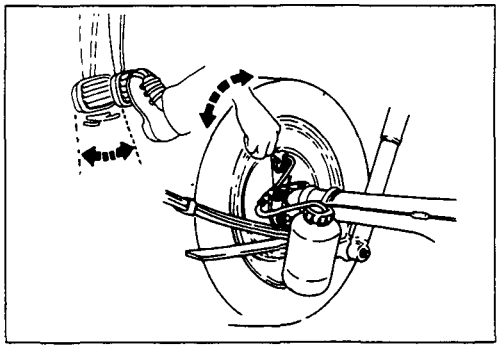

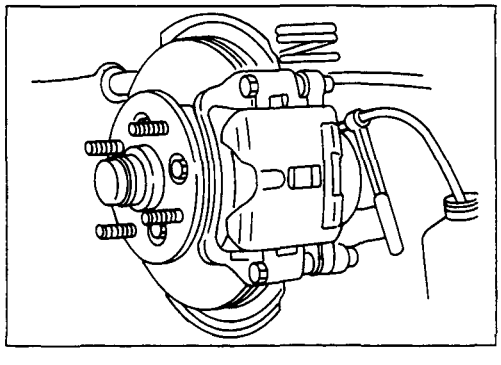

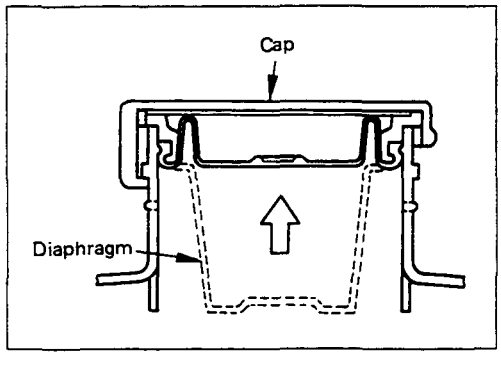

1. Fill the brake fluid reservoir with brake fluid.
   Handle the brake with reasonable care to avoid spillage as it is damaging to paint.

Note:

Take care to prevent foreign matter from entry, when replenishing or replacing brake fluid.

When pouring brake fluid, if diaphragm in the oil tank cap is stretched, be sure to place it into original position, (fasten it), and then cap it.

2. Connect a vinyl pipe to the bleeder screw on the wheel cylinder, caliper body or LSPV and the other end of the pipe in a transparent container.
3. Pump the brake pedal several times and hold it depressed. Loosen the bleed screw to release brake fluid together with air bubbles. Tighten the bleeder screw before pressure is released completely.
4. Repeat the step in paragraph 3 above until the air bubbles disappear completely. Securely tighten the bleeder screw when the air bubbles disappear completely.
5. Repeat the step in paragraph 4 above on the remaining wheel cylinders. Bleed the system starting with rear side farthest from the brake fluid reservoir.
6. Fill the brake fluid reservoir to the specified level.
   Pour brake fluid carefully so as not to produce air bubbles.
7. If the cap diaphragm is stretched, fasten the diaphragm and the sure to cap it after it is placed to the original position.

Note:

Never reuse the old brake fluid.

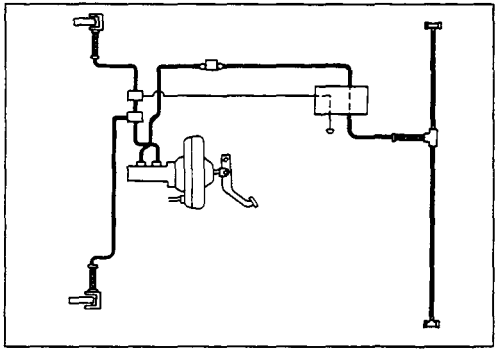

BRAKE LINE (HOSES AND PIPES)

- Inspect all hoses and pipes for wear, bending, chafing, cracks, dents, or any other damage. Make necessary correction or parts replacement if these abnormal conditions are found through inspection.
- All hoses, pipes and joints can be damaged easily. Do not allow the hose to become excessively twisted and bent when working with them, and pay special attention to all the brake lines not to damage them when repairing or replacing other parts (axle, suspension, etc).
- Inspection for leakage should be performed by depressing the brake pedal fully. If leakage is apparent at the circumference of joints, retighten or replace these parts. This procedure must be performed whenever brake lines are installed.
- After disconnecting the hoses and pipes, cap or tape the openings to prevent entry of foreign material.

ADJUSTMENT PROCEDURE OF SERVICE AND PARKING BRAKE

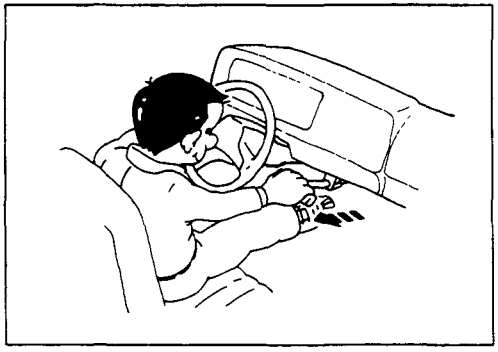

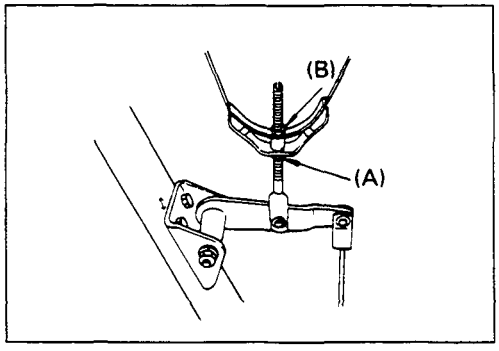

Stem type

All brakes are self-adjusting.
Brake are adjusted by repeated stepping on the brake pedal.

The parking brake adjustment should be performed as follows:

1. Release the parking brake lever fully.
2. Loosen the lock nut (A).
3. Repeat stepping the brake pedal firmly and releasing it until the rear brake auto-adjuster completes the function.
4. Rotate the adjust nut (B) until all slack disappears from the cable.
5. Set the lock nut.

The parking brake lever travel is normal when the lever comes out 9 to 11 notches when pulled with a force of 30 kg (66 lbs.).

Floor mount type

All brakes are self-adjusting. Brakes are adjusted by repeated stepping on the brake pedal. (After stepping on the pedal and releasing it, the rear auto-adjuster, in the rear brake, produces a clicking sound. The same operation should be repeated until the sound disappears.)

Take the following steps after overhauling the rear brake assembly.

1. Move the parking brake lever to its fully released position.
2. Parking cable must be loosened sufficiently.

   (Loosen the adjust nut and the lock nut.)
3. Repeat stepping on the brake pedal firmly, and releasing it until the clicking sound can no longer be heard.
   If the difference between the brake drum inside diameter of the brake shoes is adjusted to be 0.5 mm, the number of times for depressing the brake pedal can be reduced.
4. Remove the drum. Measure the brake drum inside diameter and diameter of the brake shoes.

Shoe Clearance	mm(in)
0.25 – 0.40 (0.0098 – 0.0157)	

If incorrect, check the brake auto-adjusting system.

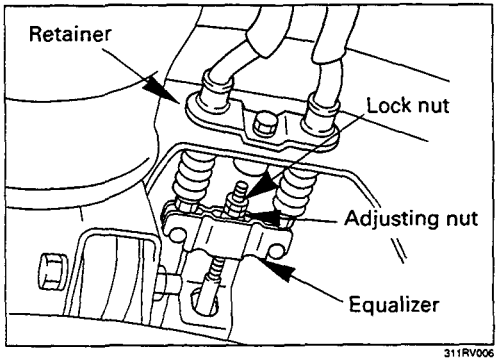

5. Turn the equalizer nut so that the parking brake lever travels 6 or 7 notches when pulled up with a force 30 kg (66 lbs.).
6. Make sure there is not brake dragging and tighten the cable lock nut.

Torque	kg·m(lb·ft/N·m)
0.8 – 1.8 (5.8 – 13 / 8 –18)	

ADJUSTMENT PROCEDURE OF BRAKE PEDAL

The push rod serves as the brake pedal stopper when the pedal is fully released. Brake pedal height adjustment should be performed as follows.

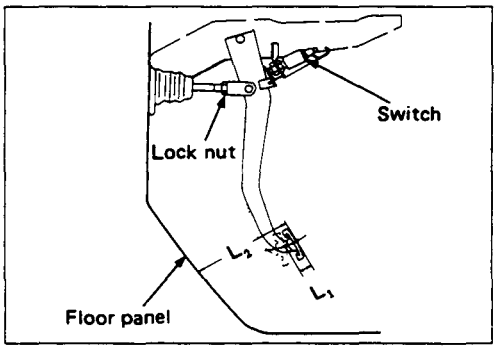

Brake Pedal - Height

Measure the brake pedal height after making sure the pedal is fully returned by the pedal return spring.

Note:

Pedal height (L_2) must be measured after starting the engine and increasing the revolution several times by stepping on the accelerator pedal.

mm(in)

Pedal free play (L_1)		6 – 10 (0.23 – 0.39)
Height (L_2)	LHD	174 – 184 (6.85 – 7.24)
	RHD	193 – 203 (7.60 – 7.99)

Note:

Pedal free play must be measured after turning off the engine and stepping on the brake pedal firmly five times or more.

If the measured value deviates from the above range, adjust the brake pedal as follows:

a) Disconnect the stop lamp switch.
b) Loosen the lock nut on the push rod.
c) Adjust the brake pedal to the specified height by rotating the push rod in the appropriate direction.

Lock Nut Torque	kg·m(lb.ft/N·m)
1.5 – 2.5 (11 – 18 / 15 – 25)	

d) Install the stop lamp switch.

Note:

Pedal height (L_2) must be 95 mm (3.7 in.) or more when applying about 50 kg (110.25 lbs.) of stepping force.

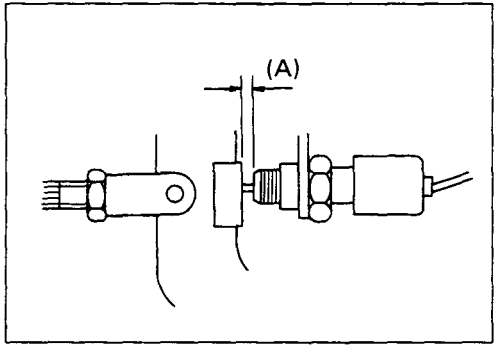

Clearance

Between the Switch Housing and the Brake Pedal (A)	mm(in)
0.5 – 1.0 (0.02 – 0.04)	

FRONT BRAKE ASSEMBLY

REMOVAL AND INSTALLATION

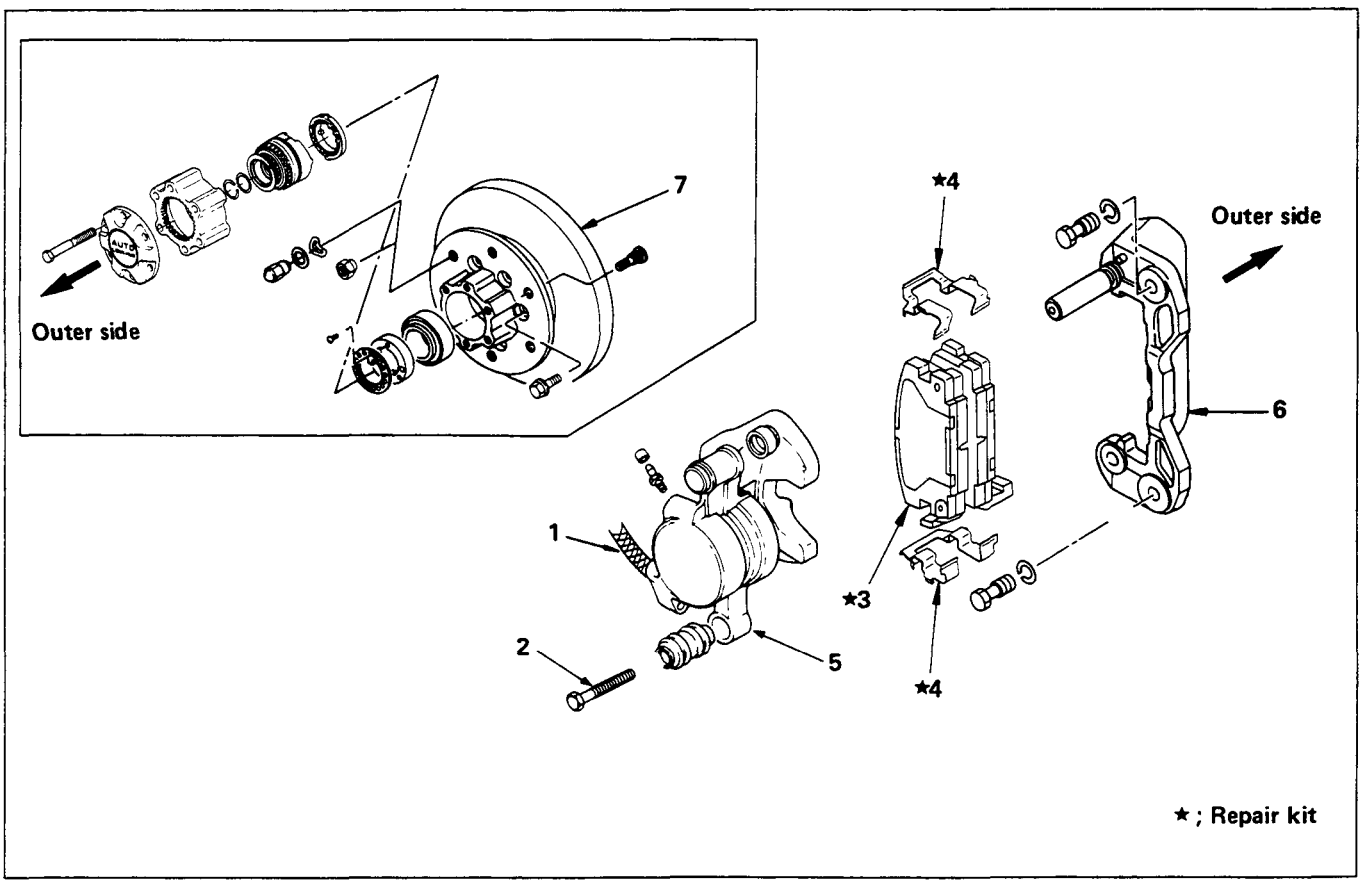

Removal Steps

- ▲ 1. Brake flexible hose
- ▲ 2. Lock bolt
- ▲ 3. Pad assembly with shim
- 4. Clip ; pad
- 5. Caliper assembly
- ▲ 6. Support bracket
- ▲ 7. Front hub and disc assembly

Installation Steps

- ▲ 7. Front hub and disc assembly
- ▲ 6. Support bracket
- 5. Caliper assembly
- ▲ 4. Clip ; pad
- 3. Pad assembly with shim
- ▲ 2. Lock bolt
- ▲ 1. Brake flexible hose

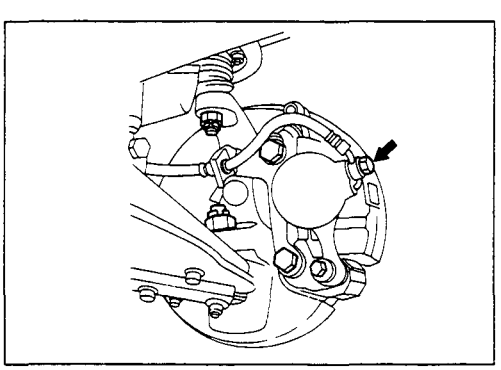

Important Operations – Removal

1. Brake Flexible Hose

Remove the bolt and gasket and disconnect the brake flexible hose from the caliper.

After disconnecting the flexible hose, cap or tape the openings to prevent entry of foreign material.

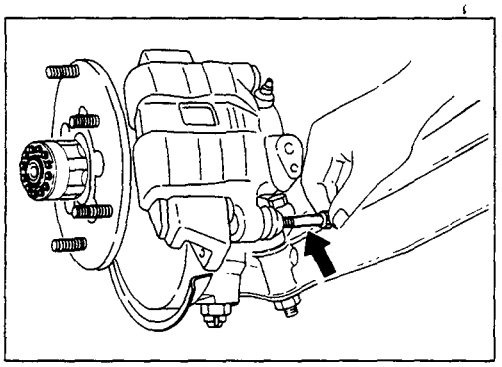

2. Lock Bolt

Remove the lock bolt from the caliper.

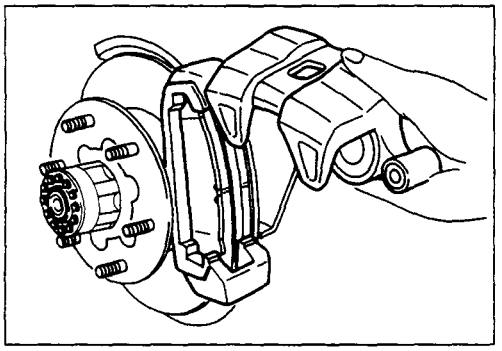

3. Pad Assembly with Shim

Rotate the caliper upward.

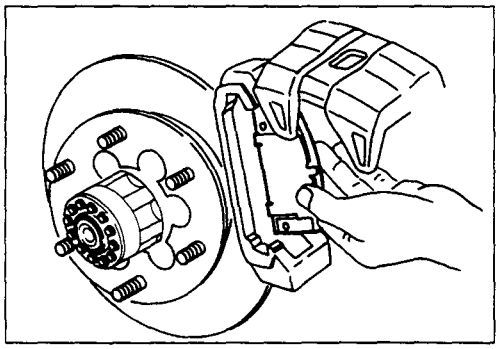

Mark the lining locations if they are to be reinstalled.

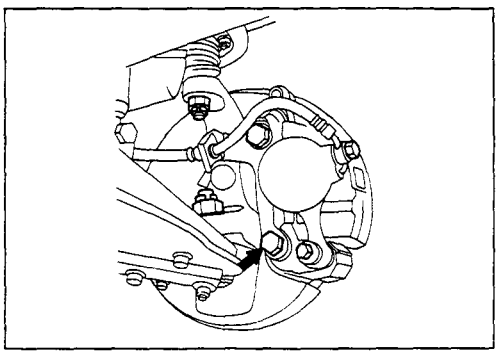

6. Support Bracket

Take care not to damage the flexible brake hose when removing the support bracket.

7. Front Hub and Disc Assembly

For the removal procedure, refer to Section 4C "FRONT WHEEL DRIVE".

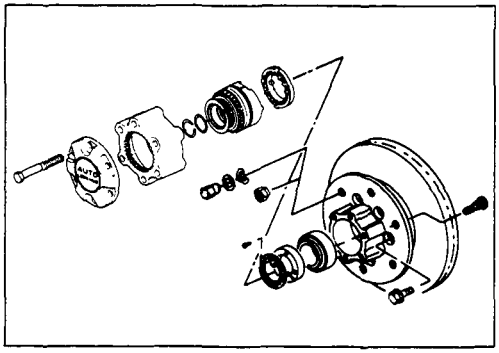

Important Operations – Installation

7. Front Hub and Disc Assembly

For the installation procedure, refer to the front hub and disc reassembly procedure in Section 4C "FRONT WHEEL DRIVE".

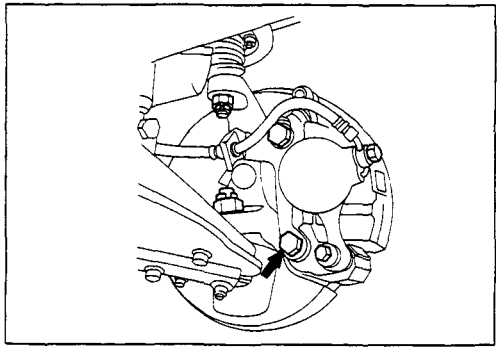

6. Support Bracket

Torque	kg·m(lb.ft/N·m)
14.2 – 17.4 (103 – 126 / 139 – 171)	

Set up the clip and pad before installation of the support bracket.

4. Clip ; Pad

Install new parts if necessary.

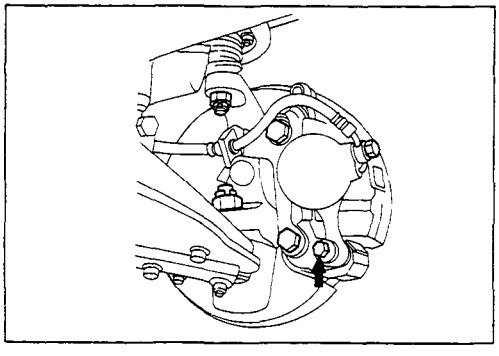

2. Lock Bolt

Torque	kg·m(lb.ft/N·m)
2.8 – 3.8 (20 – 27 / 27 – 37)	

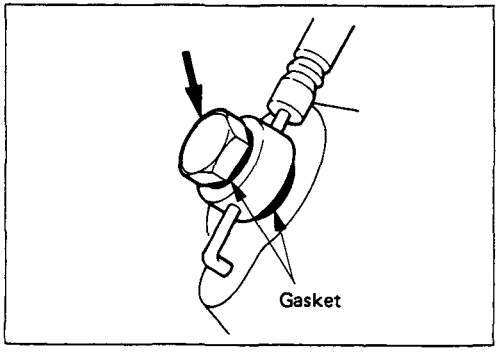

1. Brake Flexible Hose

Attach the bolt and new gasket

Torque	kg·m(lb.ft/N·m)
3.0 – 4.0 (22 – 29 / 29 – 39)	

After installation, bleeding and replenishing procedure must be performed. Wipe the circumference of the hose clean.

Note:

- **Always use new gaskets.**
- **Be sure to put the hooked edge of the flexible hose end into the anti-rotation cavity.**

REMOVAL AND INSTALLATION OF DISC PAD

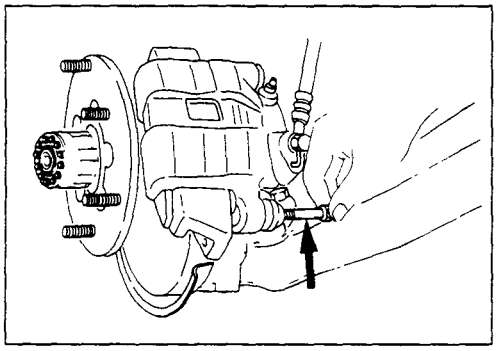

Removal Steps

1. Lock Bolt

Remove the lock bolt from the caliper.

Note:

Don't remove the brake hose from caliper when replacing pads.

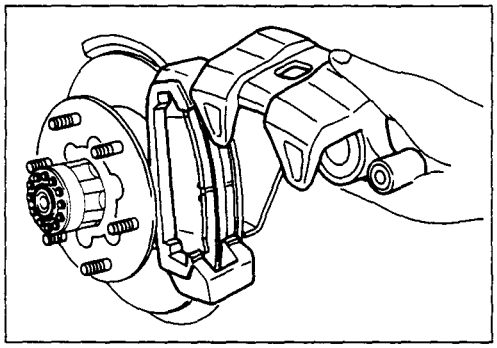

2. Rotate the Caliper Upward

Remove the caliper from the support bracket and wire the caliper to the upper link or the frame.

Note:

While caliper is removed from support bracket, never step on the brake pedal or the piston will protrude rapidly.

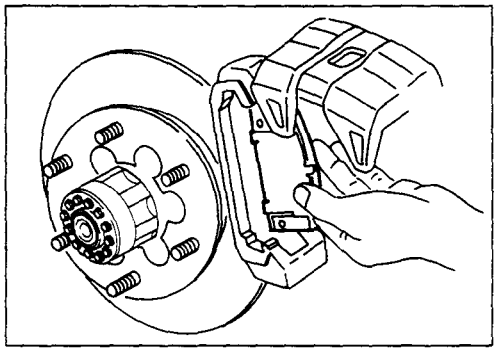

3. Pad Assembly with Shim

Remove the pad assembly with the shim.

Mark the pad locations if they are to be reinstalled.

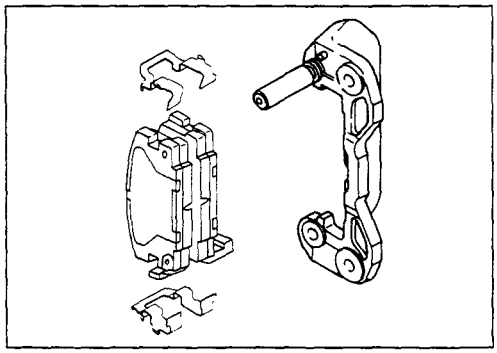

4. Clip ; Pad

Discard the used clip and install a new one.

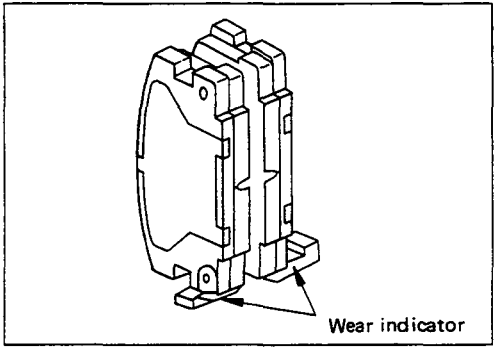

Installation Steps

1. **Clip ; Pad**
2. **Pad Assembly with Shim**

After attaching the pad assembly with the shim to the support bracket, position the wear indicator to the lower side of the pad.

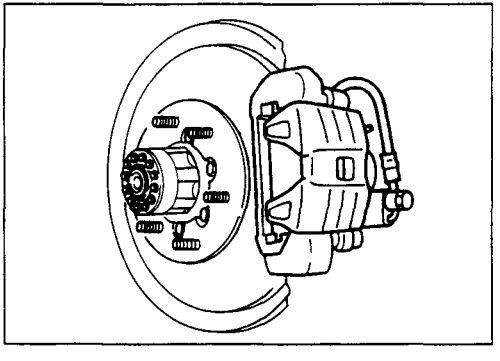

3. **Caliper Assembly**

Lower the caliper into its original position.
Do not damage the flexible hose by twisting or pulling it.

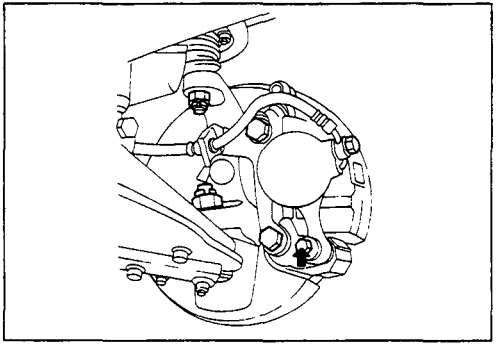

4. **Lock Bolt**

Attach the lock bolt to the caliper.

Torque	kg·m(lb.ft/N·m)
2.8 – 3.8 (20 – 27 / 27 – 37)	

DISASSEMBLY

CALIPER ASSEMBLY

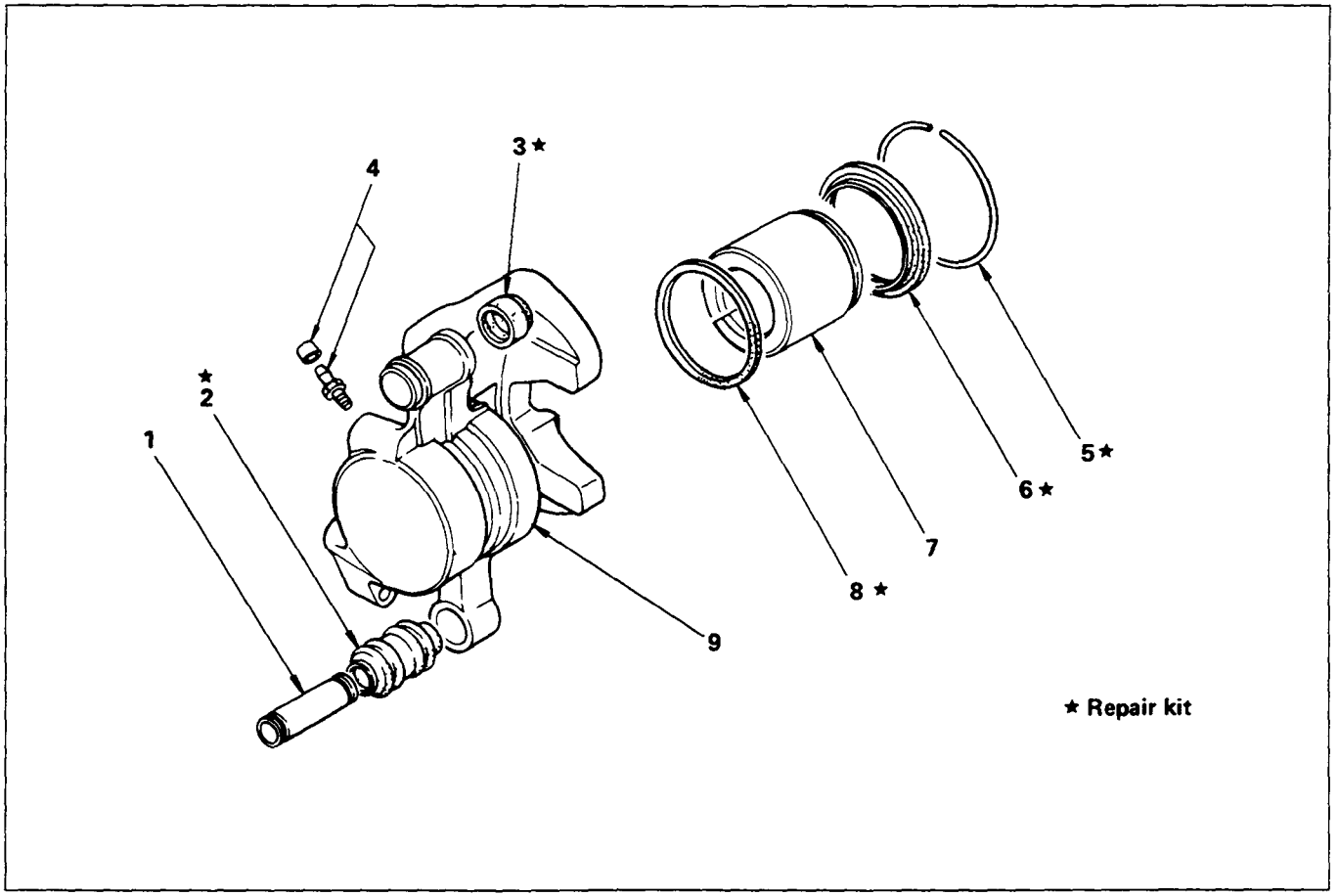

Disassembly Steps

1. Sleeve
2. Dust boot ; sleeve
3. Dust boot ; guide pin
4. Bleeder with cap
5. ▲ Dust seal ring
6. Dust seal ; piston
7. ▲ Piston (with seal ring)
8. Ring seal
9. Body ; caliper

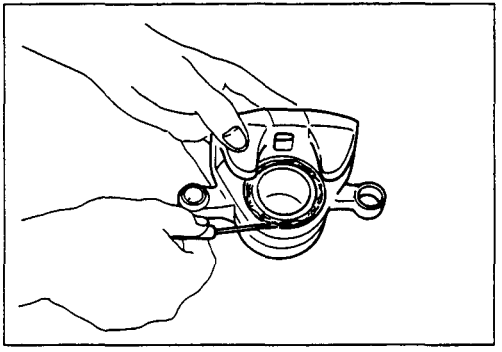

Important Operations

5. Dust Seal Ring

Using a small screwdriver, remove the dust boot.

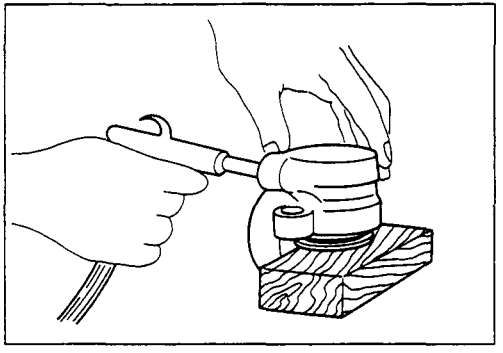

7. Piston (with Ring Seal)

Insert a block of wood into the caliper and force out the piston by blowing compressed air into the caliper at the flexible hose attachment. This procedure must be done prior tor removal of dust seal.

CAUTION:

Do not place your fingers in front of the piston in an attempt to catch or protect it when applying compressed air.

INSPECTION AND REPAIR

Make necessary correction or parts replacement if wear damage or any other abnormal conditions are found through inspection.

- Rotor
- Caliper body
- Cylinder bore
- Piston
- Support bracket
- Lock bolt
- Guide pin

Visual Check

Inspect the following parts for wear, bending, distortion, cracking, corrosion, or other abnormal conditions.

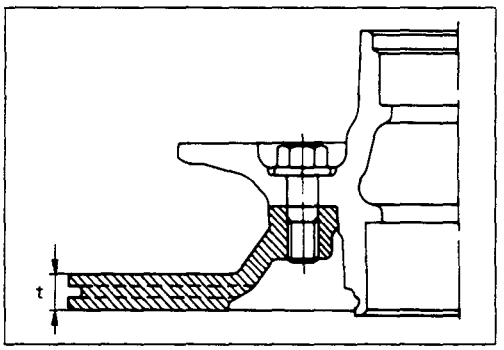

Rotor

- Thickness (t) mm(in)

Standard	Minimum thickness after refinishing	Replacement thickness (Discard)
22.0 (0.866)	20.97 (0.826)	20.6 (0.811)

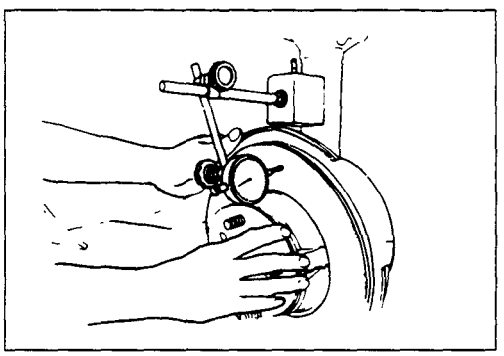

- Run out

Limit	mm(in)
0.13 (0.005)	

Before inspection, adjust the wheel bearing correctly. Using a dial gauge, measure the run out at the center of disc pad contact surface.

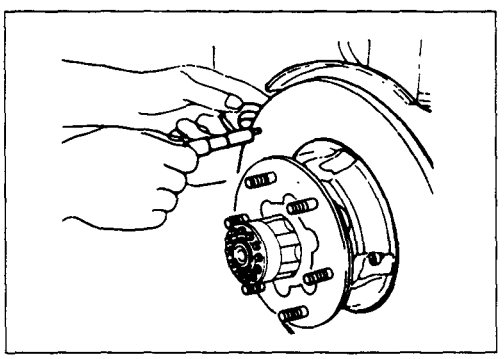

- Parallelism (Total circumferential thickness variation)

Limit	mm(in)
0.015 (0.0006)	

Contact surface must be within 0.015 mm at the circumference of 203 mm dia. circle.

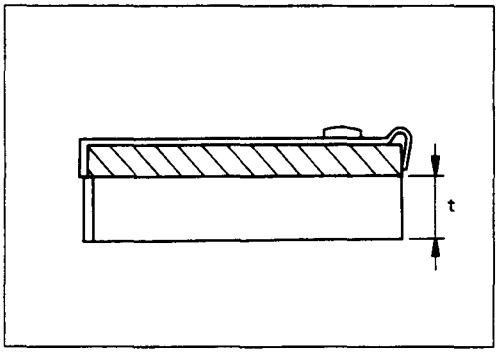

Thickness of Disc Pad

Thickness (t) mm(in)

Standard	Limit
10.5 (0.413)	1.0 (0.039)
9.5 (0.374) (For Australia only)	

Replace the front disc pad whenever the pad wear indicator makes a squeaking noise or when the pad is worn to within 1 mm of the shoe table.

All four brake pads should be replaced together.

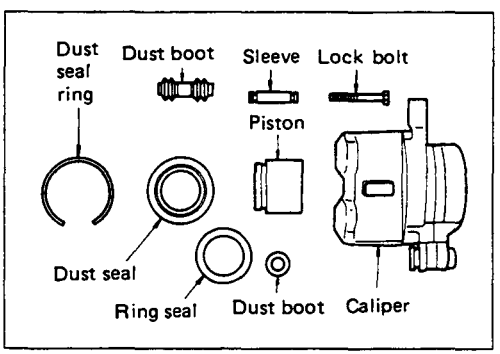

Seal and Boot

The dust seal, dust boot and ring seal are to be replaced each time the caliper is overhauled.
Discard thee used rubber parts.

REASSEMBLY

CALIPER ASSEMBLY

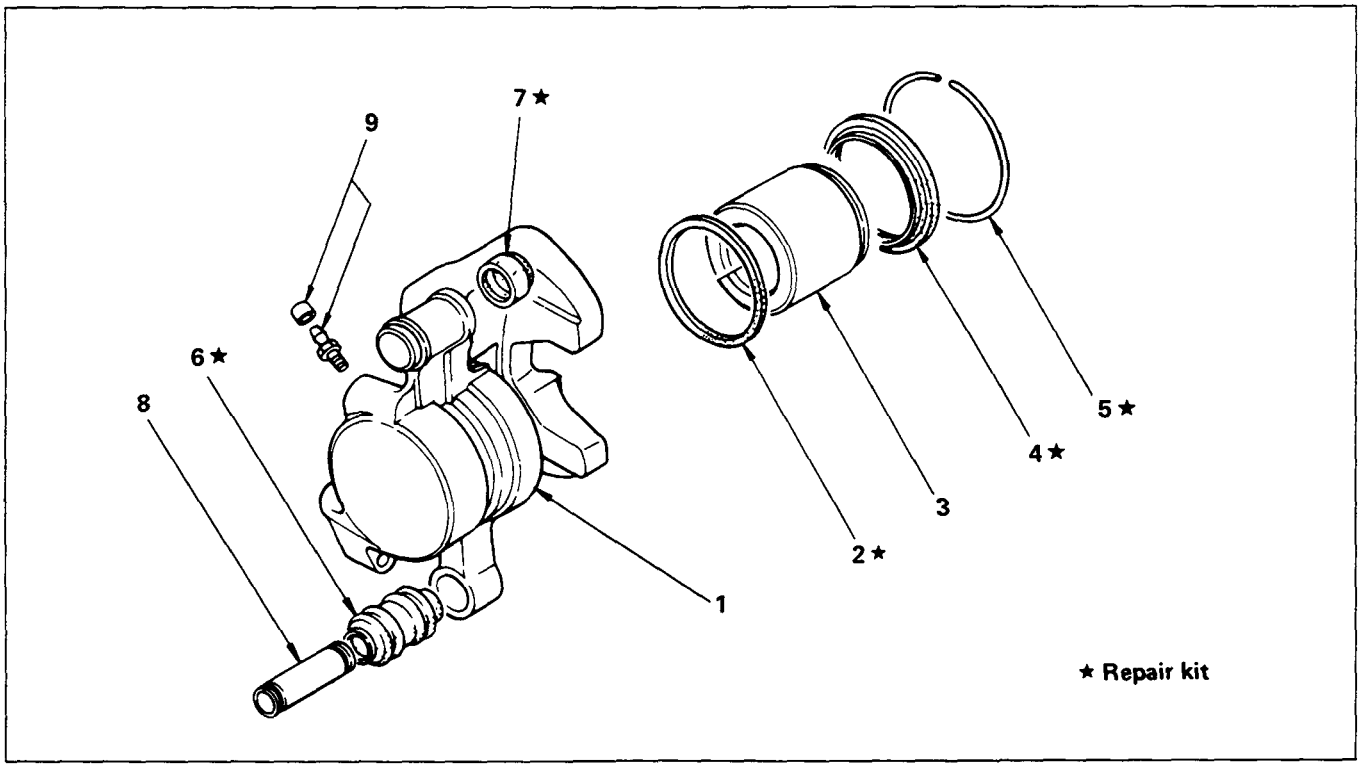

Disassembly Steps

- ▲ 1. Body ; caliper
- ▲ 2. Ring seal
- ▲ 3. Piston
- ▲ 4. Dust seal ; piston
- ▲ 5. Dust seal ring
- ▲ 6. Dust boot ; sleeve
- ▲ 7. Dust boot ; guide pin
- 8. Sleeve
- ▲ 9. Bleeder with cap

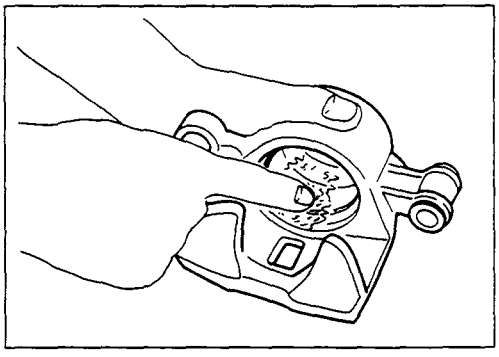

Important Operations

1. Body ; Caliper

2. Ring Seal

Apply special grease to the ring seal and cylinder wall, then insert the ring seal into the cylinder.
The special grease is included in the repair kit.

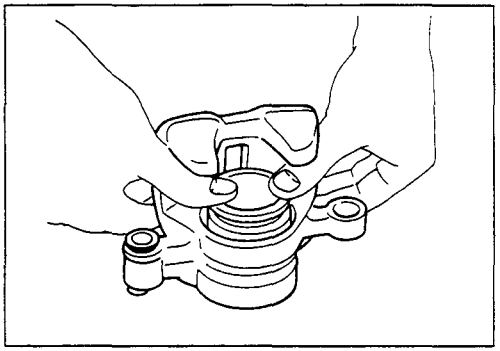

3. Piston

When inserting the piston into the cylinder, use finger pressure only. Do not use a mallet or other impact tools, since damage to the cylinder wall or ring seal can result.

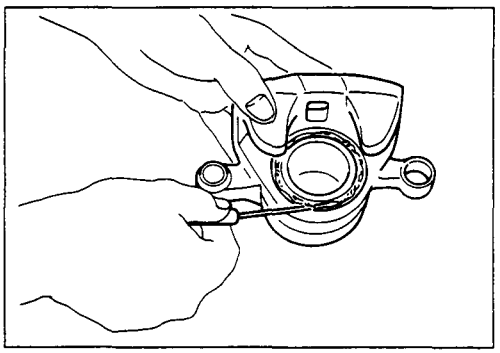

4. Dust Seal ; Piston

5. Dust Seal Ring

Apply special grease (Approx. 1 g) to the piston and attach the dust seal to the piston and caliper.
Insert the dust seal ring into the dust seal.

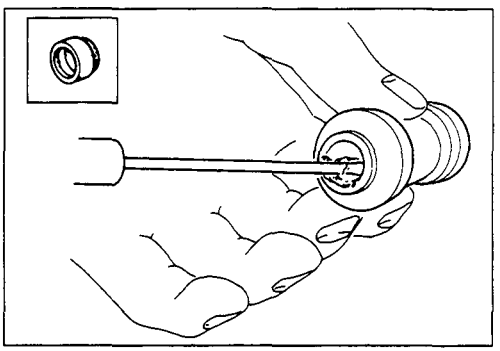

6. Dust Boot ; Sleeve

7. Dust Boot ; Guide Pin

Install the sleeve dust boot on the caliper after applying special grease (Approx. 1 g) into the sleeve and guide pin boots, then insert the sleeve into the dust boot.

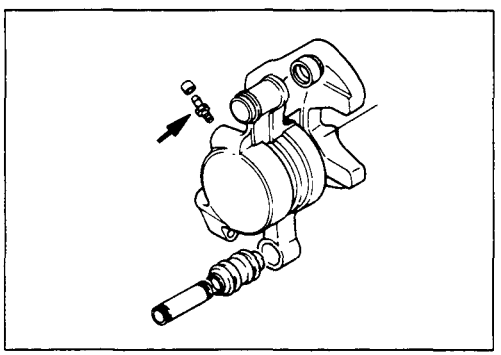

9. Bleeder with Cap

Torque	kg·m(lb.ft/N·m)
	0.6 – 0.9 (4.3 – 6.5 / 5.9 – 8.8)

REAR DRUM BRAKE ASSEMBLY

DISASSEMBLY

First, disassemble the brake drum. Then disassemble the rear brake assembly.
Refer to the "REAR AXLE" section for the brake drum disassembly procedure.

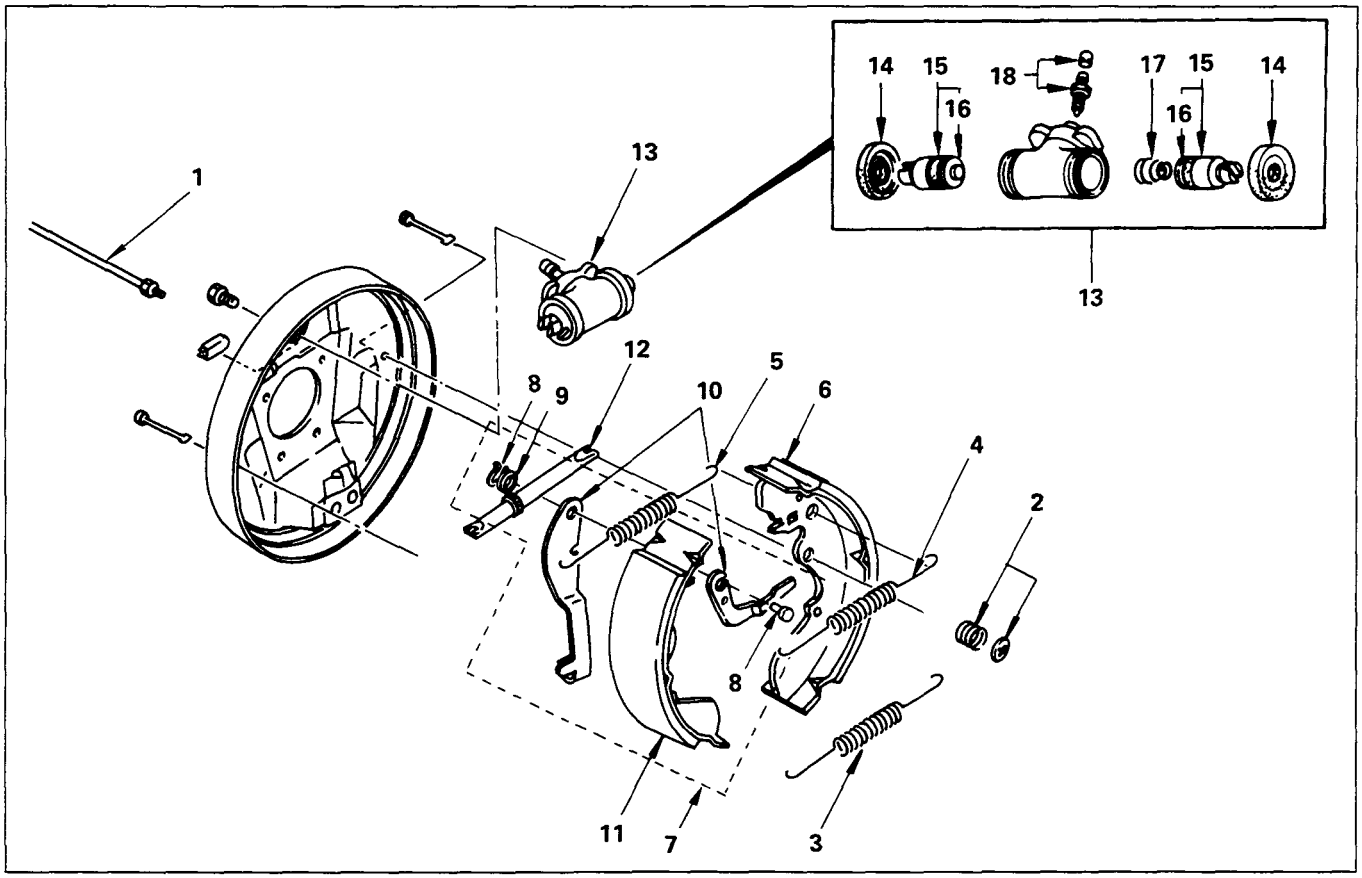

MAJOR COMPONENTS

Disassembly Steps

1. Brake line
2. Holding spring and cups
3. ▲ Return spring ; lower
4. Return spring ; upper (shoe to adjust lever)
5. Return spring ; upper (shoe to shoe)
6. Shoe assembly (primary)
7. Shoe assembly with lever
8. Retainer with pin
9. Washer ; wave
10. Lever ; auto adjuster
11. Shoe assembly (secondary)
12. Adjuster assembly
13. Wheel cylinder assembly

MINOR COMPONENTS

Disassembly Steps
Wheel Cylinder Assembly (13)

14. Boot ; wheel cylinder
15. Piston assembly
16. Cup ; piston
17. Return spring ; piston
18. Bleeder ; wheel cylinder

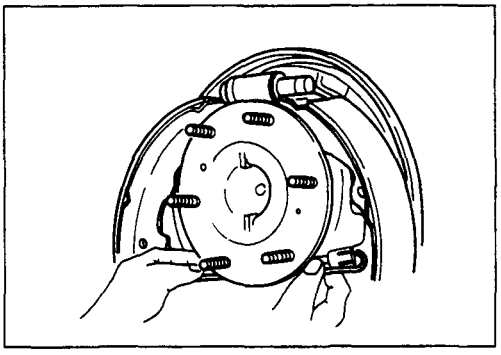

Important Operations

3. **Return Spring ; Lower**

INSPECTION AND REPAIR

Make necessary correction or parts replacement if wear damage or any other abnormal conditions are found through inspection.

- Brake drum
- Back plate
- Brake lining
- Wheel cylinder body
- Piston
- Piston cup
- Return spring

Visual Check

Inspect the following parts for wear scuffs, scratches, corrosion, stains, deterioration, or other abnormal conditions.

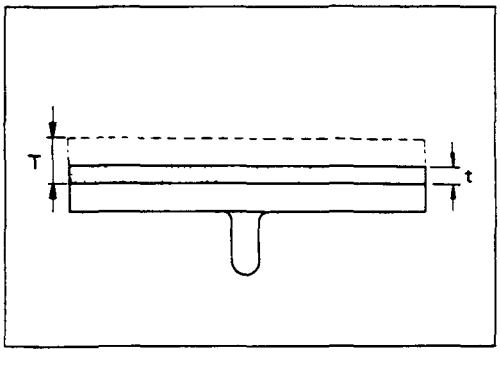

Thickness of the Brake Lining

Thickness mm(in)

	Standard (T)	Limit (t)
TFR	5.0 (0.197)	1.0 (0.039)
TFS	4.0 (0.157)	1.0 (0.039)

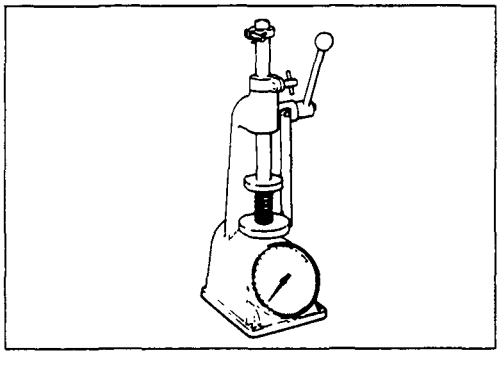

Inspection of the Return Spring

	Free length mm(in.)	Set length mm(in.)	Set load kg(lbs.)
Holding spring	15.0 (0.591)	11.2 (0.441)	10.0 ± 1.0 (22.3 ±2.2)
Wheel cylinder spring	37.4 (1.472)	8.0 (0.315)	1.0 ±0.1 (2.2 ±0.2)

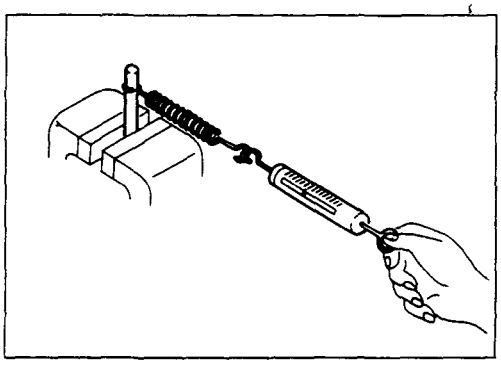

	Free length mm(in.)	Set length mm(in.)	Set load kg(lbs.)
Return spring: upper (adjust lever)	124.9 (4.917)	134.9 (5.311)	7 ± 0.7 (15.4 ±1.6)
Shoe return spring: upper	112.4 (4.425)	121.5 (4.783)	2 ±0.2 (4.4 ±0.4)
Shoe return spring: lower	167.2 (6.583)	190.2 (7.488)	28.0 ±2.8 (61.7 ±6.4)

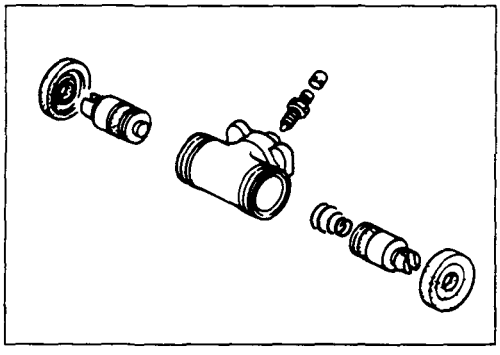

Clean Wheel Cylinder Parts

Always use clean brake fluid to clean wheel cylinder parts.

Note:

Do not use mineral-base cleaning solvents such as gasoline, kerosene, acetone, paint thinner, or carbon tetrachloride.

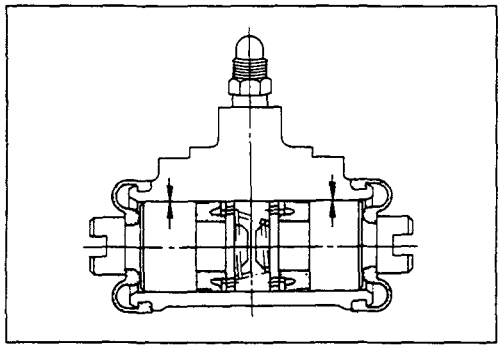

Clearance Between the Wheel Cylinder and the Piston

mm(in)

Standard	Limit
0.02 – 0.1 (0.001 – 0.004)	0.15 (0.006)

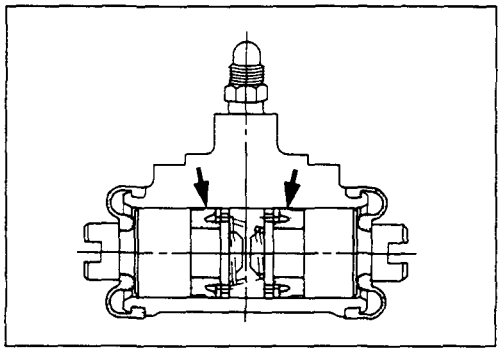

Piston Cups

Inspect the piston cups for wear, distortion, fatigue or other abnormal conditions.

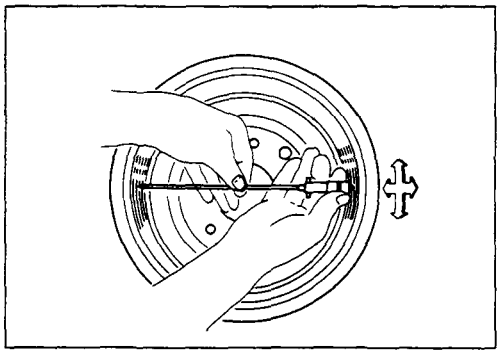

Measuring the Brake Drum

mm(in)

		Standard	Limit
TFR	Inside diameter	254 (10.000)	255.5 (10.059)
	Run out	0.05 (0.002)	0.15 (0.006)
TFS	Inside diameter	295 (11.614)	296.5 (11.673)
	Run out	0.05 (0.002)	0.15 (0.006)

REASSEMBLY

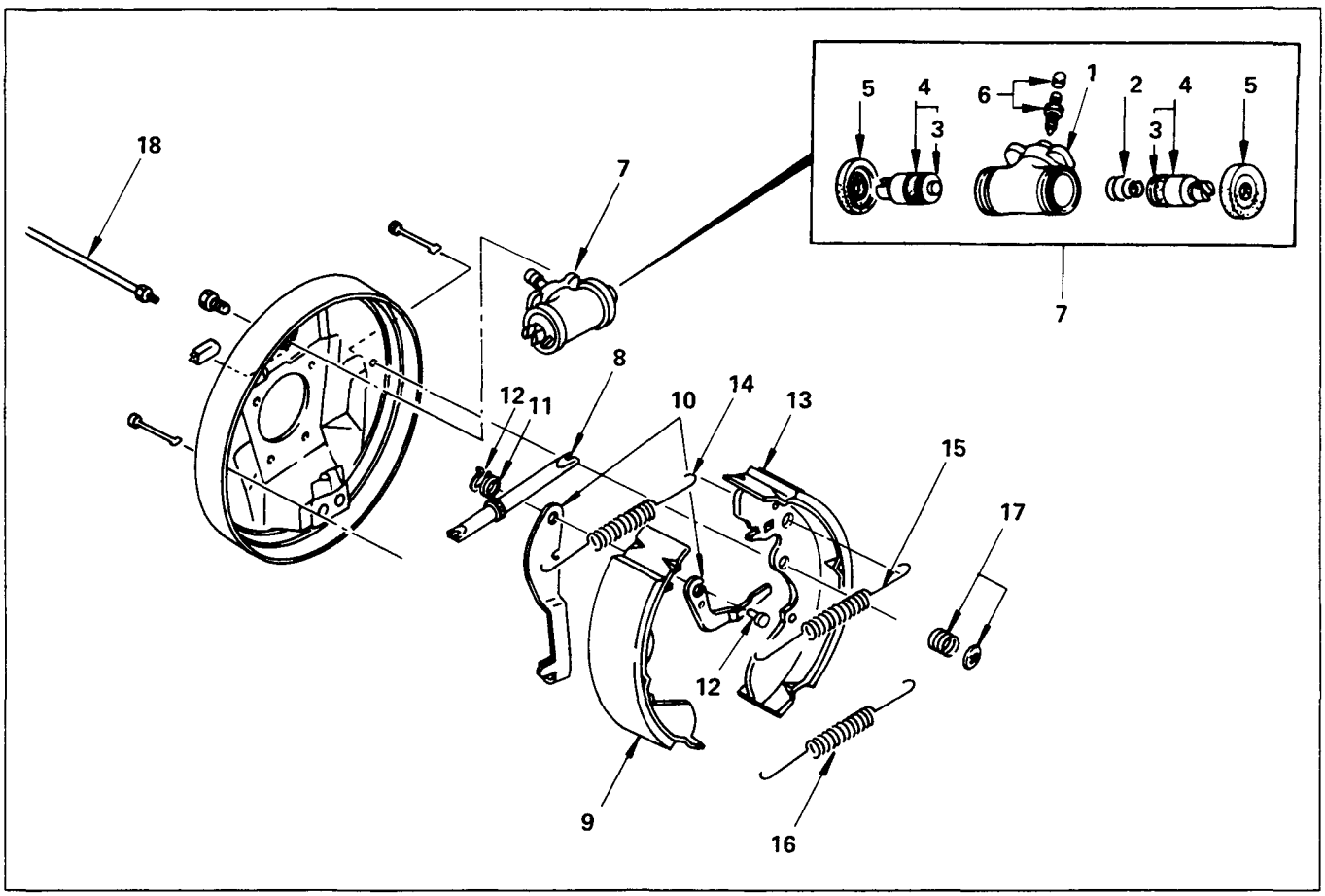

MINOR COMPONENTS

Reassembly Steps
Wheel Cylinder Assembly (7)

▲ 1. Body ; wheel cylinder
2. Return spring ; piston
3. Cup ; piston
▲ 4. Piston assembly
5. Boot ; wheel cylinder
▲ 6. Bleeder ; wheel cylinder

MAJOR COMPONENTS

Reassembly Steps

▲ 7. Wheel cylinder assembly
8. Adjuster assembly
9. Shoe assembly (secondary)
10. Lever ; auto adjuster
11. Washer ; wave
12. Retainer with pin
13. Shoe assembly (primary)
14. Return spring ; upper (shoe to shoe)
15. Return spring ; upper (shoe to adjust lever)
16. Return spring ; lower
17. Holding spring and cups
▲ 18. Brake line

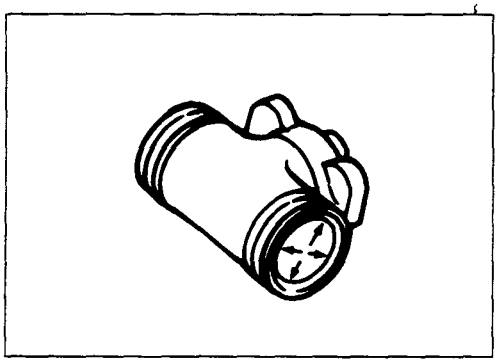

Important Operations

1. Body ; Wheel Cylinder

Lubricate the cylinder bore with clean rubber grease.

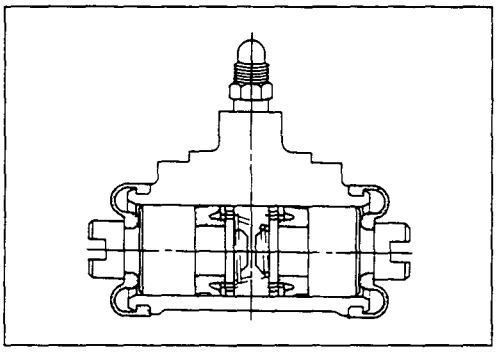

4. Piston Assembly

Install new piston cups on each piston so that the flared end of the cups are turned to the inboard side of the pistons.

Attach the return spring and the boot to the piston.

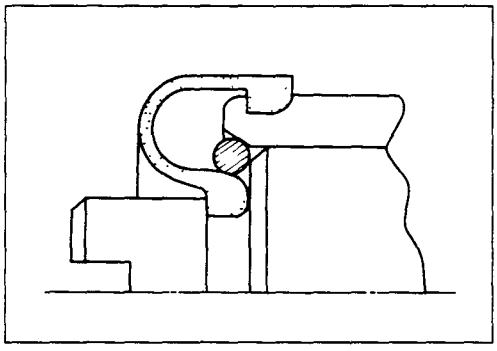

Apply DELCO silicone lube No. 5459912 **(or equivalent)** to the piston and the inner face of the boots.

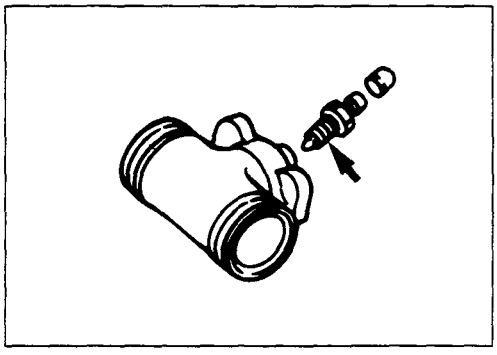

6. Bleeder ; Wheel Cylinder

Torque	kg·m(lb.ft/N·m)
0.7 – 1.2 (5.1 – 8.7 / 6.9 – 11.8)	

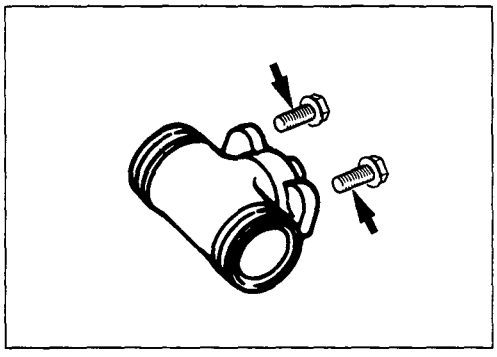

7. Wheel Cylinder Assembly

Torque	kg·m(lb.ft/N·m)
1.1 – 1.5 (8 – 11 / 11 – 15)	

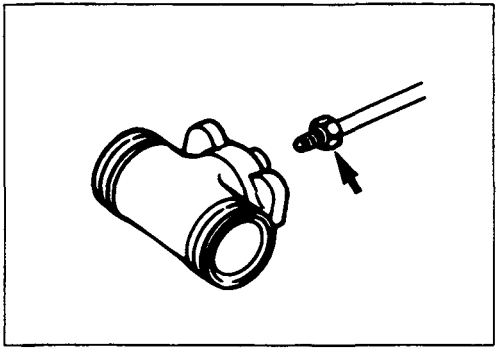

18. Brake Line

Torque	kg·m(lb.ft/N·m)
1.3 – 1.9 (9 – 14 / 13 – 19)	

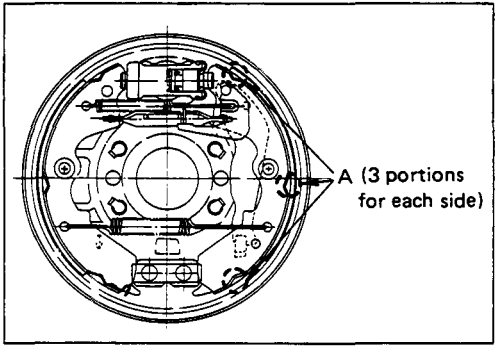

Apply grease lightly to back plate A.

BRAKE CONTROL

REMOVAL AND INSTALLATION

BRAKE PEDAL ASSEMBLY

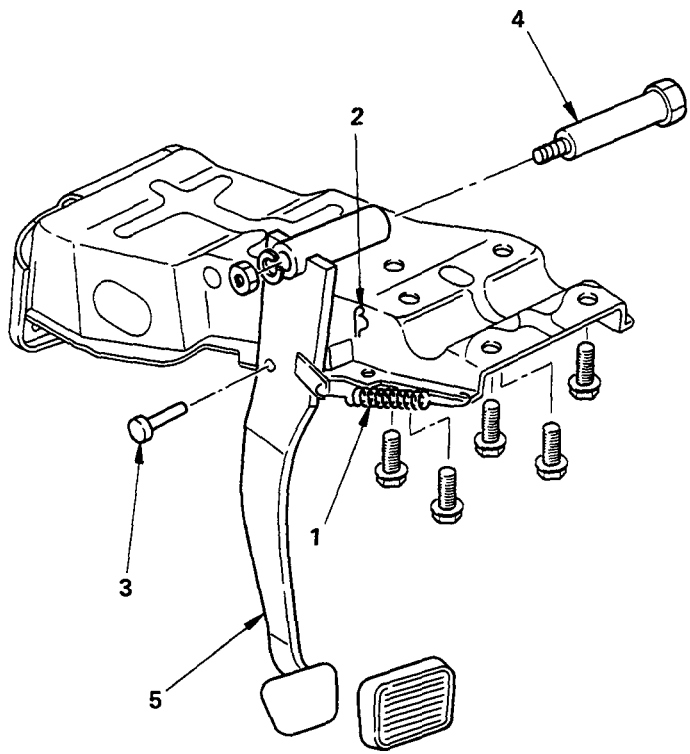

This illustration is based on the LHD model.

Removal Steps

1. Return spring
2. Snap pin
3. Pin ; push rod to pedal
4. Pin ; fulcrum, pedal to bracket
5. Pedal assembly with bush

Installation Steps

To install, follow the removal procedure in reverse order.

Before installation, apply grease to the entire circumference of the fulcrum pin (4) and push rod pin (3).

Refer to "SERVICING" in this section for adjustment procedure of brake pedal.

MASTER CYLINDER

REMOVAL AND INSTALLATION

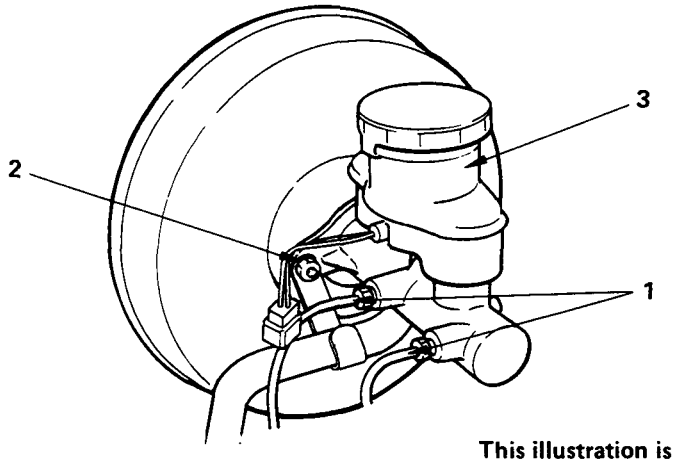

This illustration is based on the LHD model.

Removal Steps

▲ 1. Brake line
2. Nut ; master cylinder to vacuum servo
3. Master cylinder assembly

Installation Steps

3. Master cylinder assembly
▲ 2. Nut ; master cylinder to vacuum servo
▲ 1. Brake line

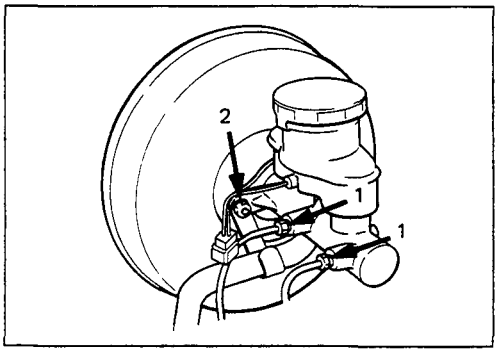

Important Operation – Removal

1. Brake Line

Be very careful not to spill brake fluid on the painted surface. Damage to the painted surface will result.

Important Operation – Installation

2. Nut ; Master Cylinder to Vacuum Servo

Torque	kg·m(lb.ft/N·m)
1.0 – 1.6 (7 – 12 / 9.8 – 16)	

1. Brake Line

Torque	kg·m(lb.ft/N·m)
0.9 – 1.5 (6.5 – 11 / 8.8 – 15)	

DISASSEMBLY

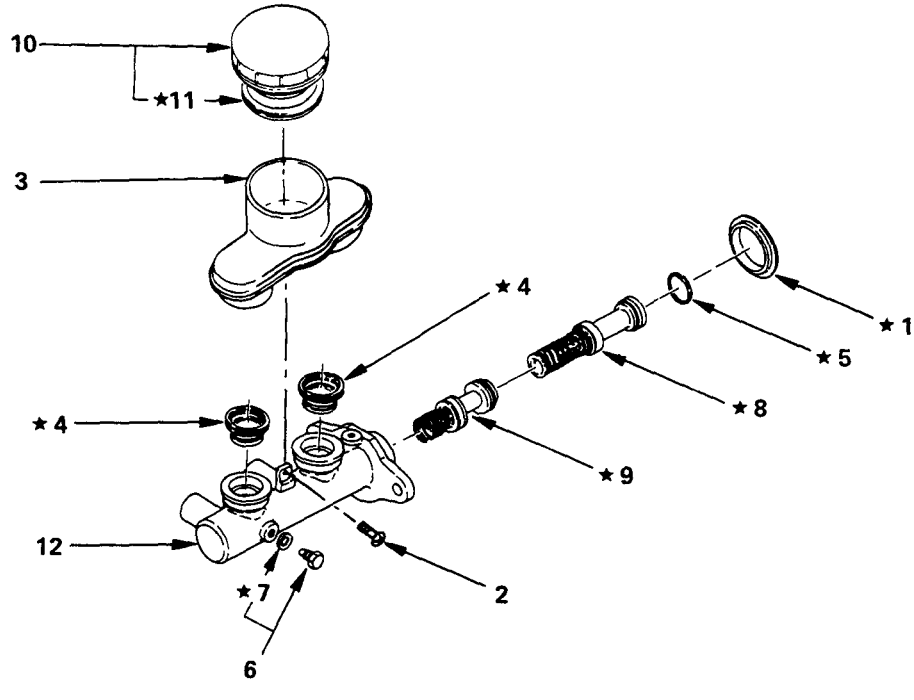

Disassembly Steps

1. Dust seal
2. Screw
3. Reservoir ; fluid, brake
4. Grommet
▲ 5. Ring ; snap
▲ 6. Bolt ; stopper
7. Gasket
▲ 8. Piston assembly ; primary and spring
▲ 9. Piston assembly ; secondary and spring
10. Cover ; fluid reservoir
11. Seal
12. Cylinder assembly ; brake, master

Important Operations

When disassembling, inspecting or reassembling the master cylinder assembly, take care not to bring the parts into contact with mineral oil or dust. Wash the piston cups only with brake fluid. Do not use gasoline or other mineral-base cleaning solvents.

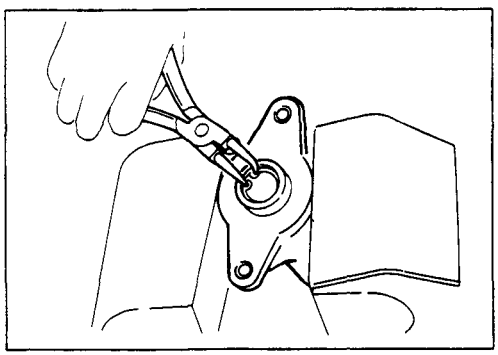

5. Ring ; Snap

Remove the snap ring from the cylinder body with pushing in the primary and secondary pistons.

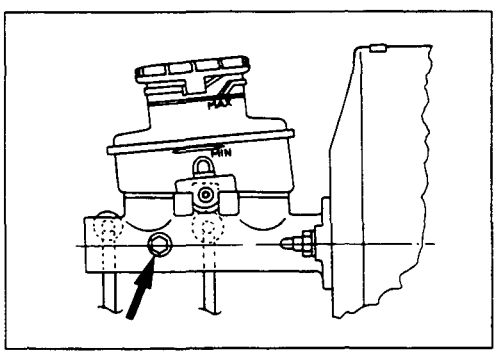

6. Bolt ; Stopper

Push in the primary and secondary pistons and remove the stopper bolt completely from the cylinder body, then remove the primary and secondary piston assemblies.

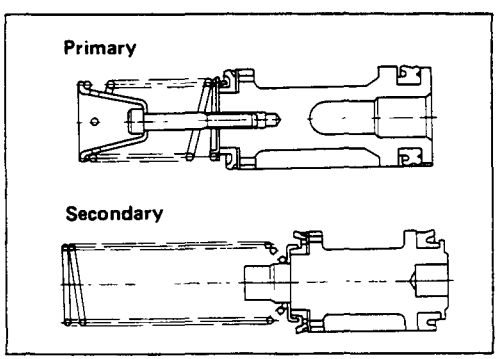

8. Piston Assembly ; Primary and Spring

9. Piston Assembly ; Secondary and Spring

Don't remove the spring from the piston.

INSPECTION AND REPAIR

Make necessary correction or parts replacement if wear damage or any other abnormal conditions are found through inspection.

- Cylinder inside face
- Piston
- Piston cap
- Piston cap spacer
- Return port
- Return spring

Visual Check

Inspect the following parts for wear, distortion, cuts, nicks, corrosion, or other abnormal conditions.

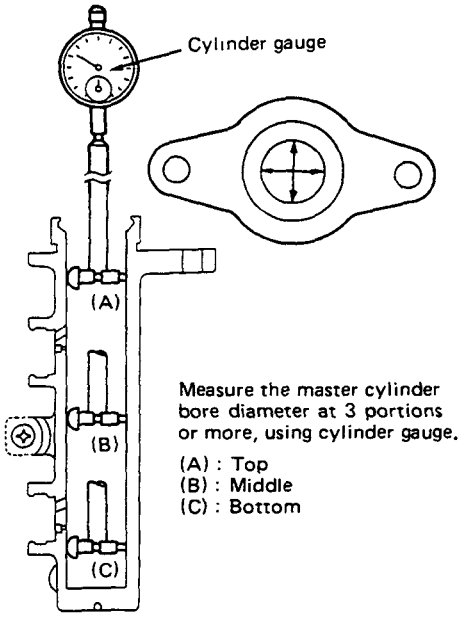

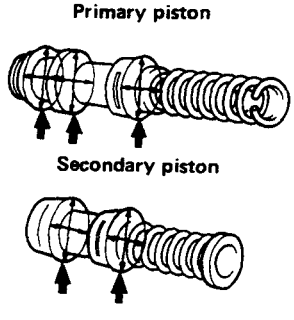

Master Cylinder Bore Diameter

Standard	mm(in)
23.81 (0.938)	

Clearance between the Master Cylinder and the Piston

Measure the outer diameter of the piston assembly at the portions shown in the left figure.

mm(in)

Standard	Limit
0.04 – 0.125 (0.00158 – 0.00493)	0.15 (0.00591)

Note:

If the clearance deviates from the range shown above, replace the master cylinder and the piston assembly together.

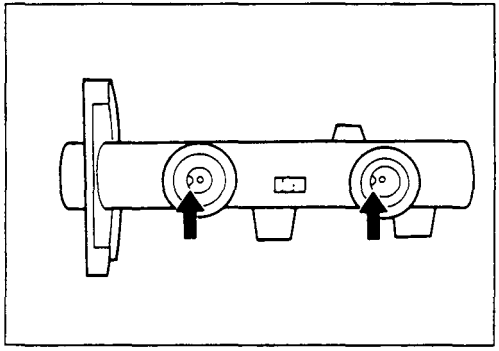

Return Port

Check the return port for obstructions and if necessary, clean with a tag wire. Blow away foreign matter with compressed air.

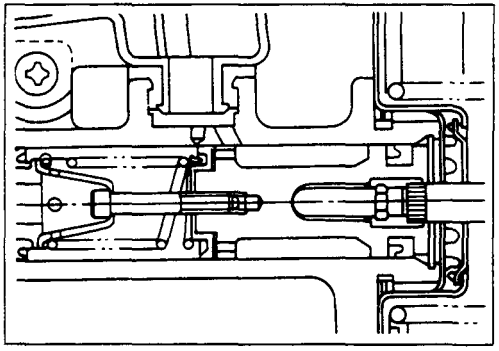

Primary Piston

After reassembly, push in the primary piston to see that it returns smoothly.
Repeat the test two or three times to see that brake fluid is forced out from the front and rear outlets.

REASSEMBLY

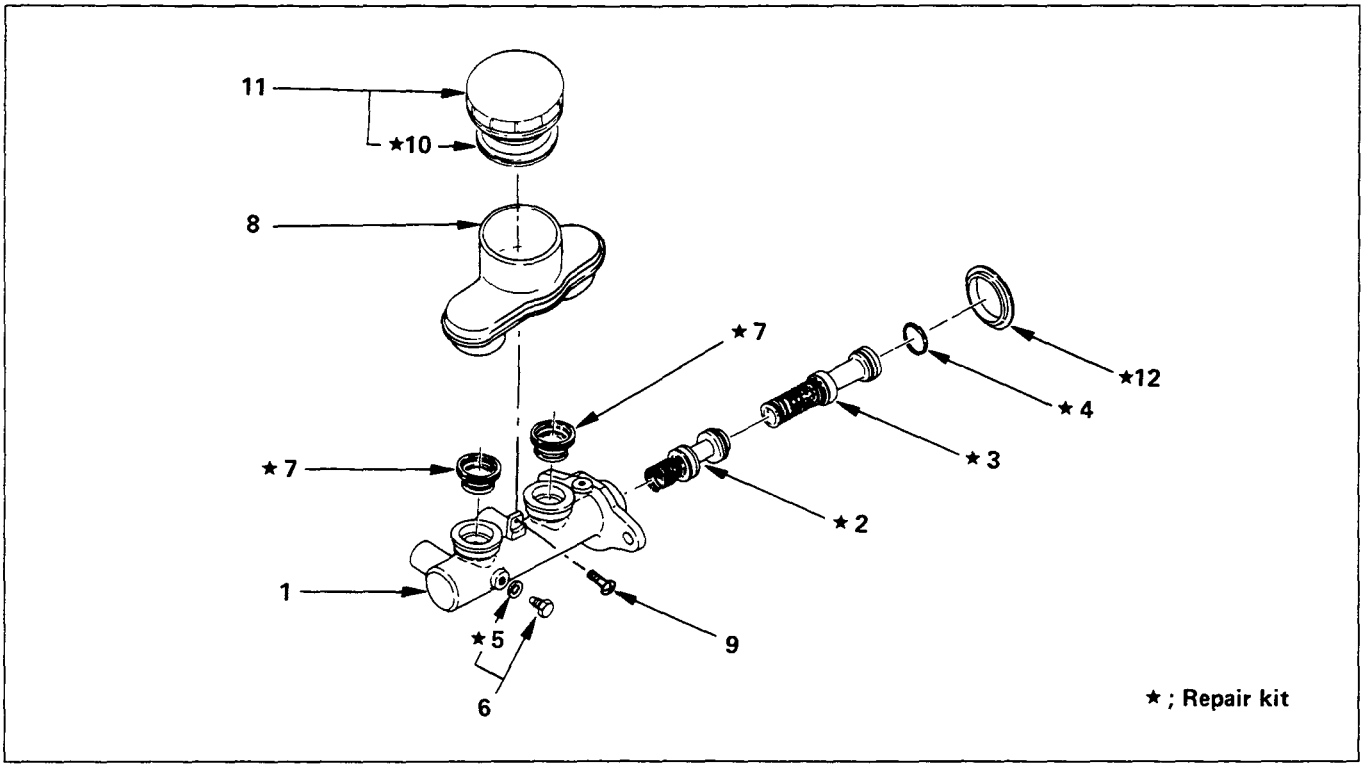

Reassembly Steps

▲ 1. Cylinder assembly ; brake, master
▲ 2. Piston assembly ; secondary and spring
▲ 3. Piston assembly ; primary and spring
4. Ring ; snap
5. Gasket
▲ 6. Bolt ; stopper
▲ 7. Grommet
8. Reservoir ; fluid , brake
▲ 9. Screw
10. Seal
11. Cover ; fluid reservoir
▲ 12. Dust seal

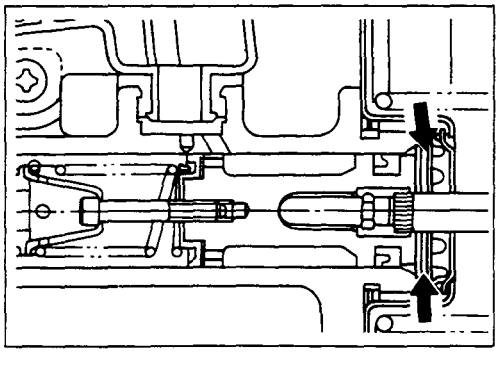

Important Operations

1. Cylinder Assembly ; Brake, Master

Lubricate the master cylinder bore with clean rubber grease. (arrowed portion)

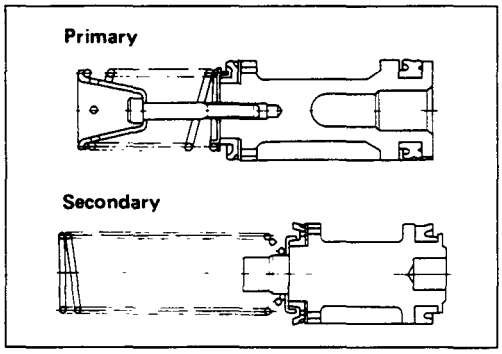

2. Piston Assembly ; Secondary and Spring

3. Piston Assembly ; Primary and Spring

Lubricate the piston cups on the primary piston assemblies with rubber grease.
Take care not to scratch the piston cup when installing the piston assemblies.

Note:

Don't remove the spring from the piston.

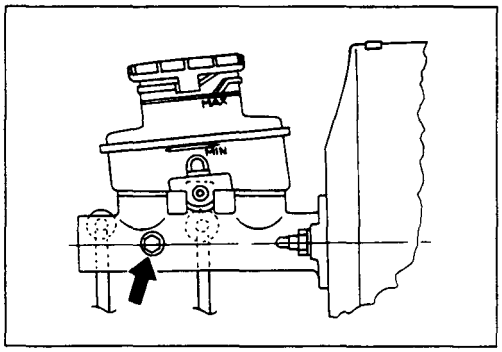

6. Bolt ; Stopper

Depress the primary piston and install the piston stopper bolt with a new gasket.

Torque	kg·m(lb.ft/N·m)
0.7 – 0.9 (5.1 – 6.5 / 6.9 – 8.8)	

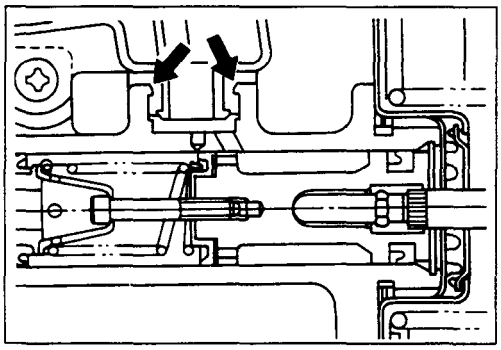

7. Grommet

Lubricate the new grommets with clean rubber grease. Insert the grommets, with the flared side up, into the cylinder body.

Apply rubber grease to the dust seal portion.
(The portion indicated by the arrows in the left diagram.)

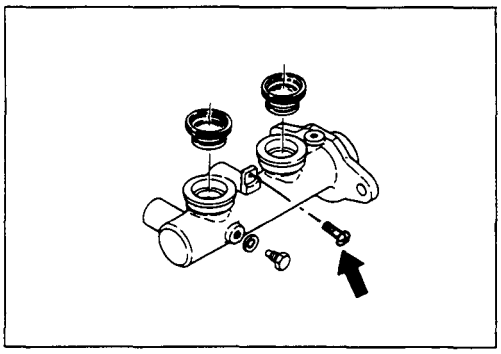

9. Screw

Torque	kg·m(lb.ft/N·m)
0.10 – 0.20 (0.7 – 1.5 / 1.0 – 2.0)	

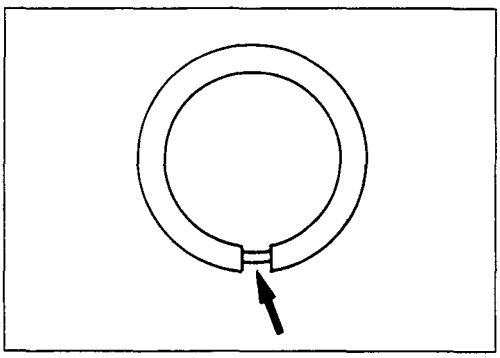

12. Dust Seal

Install the dust seal so that its groove faces downward.

VACUUM SERVO

REMOVAL AND INSTALLATION

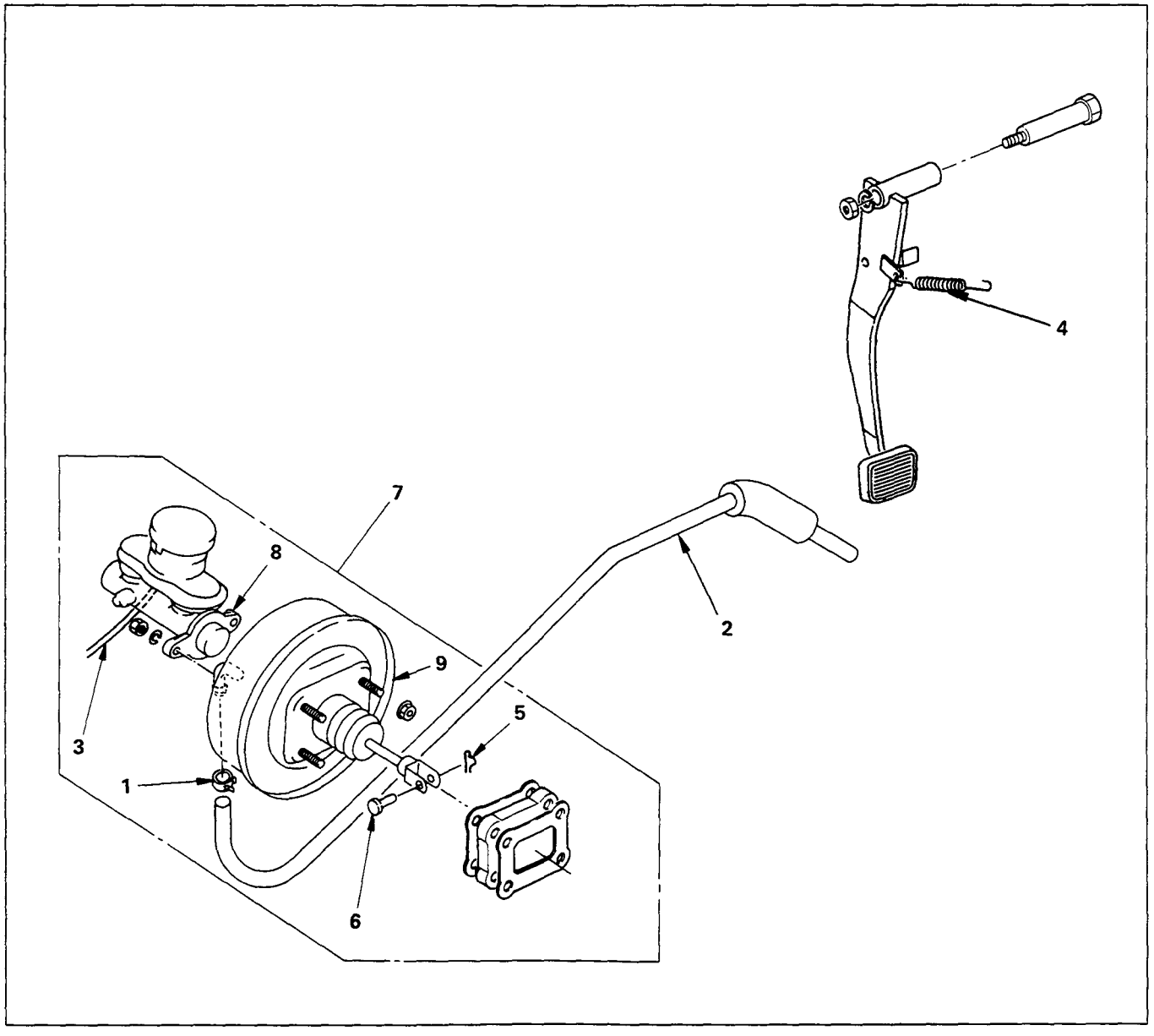

Removal Steps

1. Clamp ; vacuum hose
2. Vacuum hose
3. ▲ Brake line
4. Return spring ; brake pedal
5. Snap pin
6. Pin ; push rod to brake pedal
7. Vacuum servo to dash panel and pedal mounting bracket
8. Master cylinder assembly
9. Vacuum servo assembly

Installation Steps

9. Vacuum servo assembly
8. ▲ Master cylinder assembly
7. ▲ Vacuum servo to dash panel and pedal mounting bracket
6. Pin ; push rod to brake pedal
5. Snap pin
4. Return spring ; brake pedal
3. ▲ Brake line
2. ▲ Vacuum hose
1. Clamp ; vacuum hose

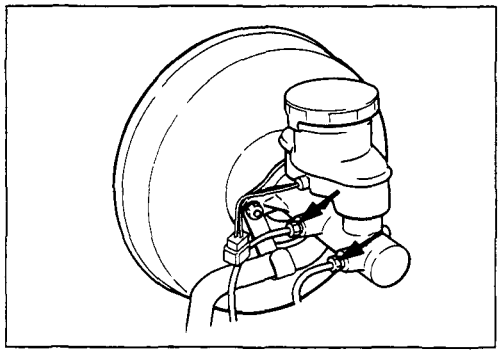

Important Operation – Removal

3. Brake Line

When handling, be careful not to spill brake fluid over the painted surfaces, as damage to the paint finish will result.

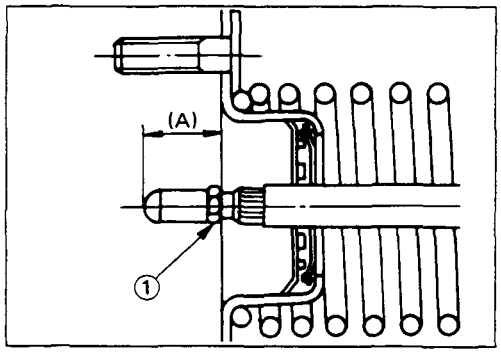

Important Operation – Installation

8. Master Cylinder Assembly

Check the distance from the flange face of the vacuum servo to the end of the push rod before installation of the master cylinder.

Projection (A)	mm(in)
18.0 – 18.2 (0.709 – 0.717)	

If the measured distance deviates from the specified range, make an adjustment with the lock nut ① at the end of the push rod.

Torque	kg·m(lb.ft/N·m)
1.5 – 2.5 (11 – 18 / 15 – 25)	

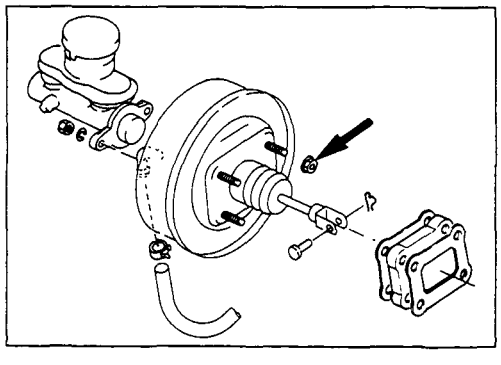

7. Vacuum Servo to Dash Panel and Pedal Mounting Bracket

Torque	kg·m(lb.ft/N·m)
2.2 – 3.2 (16 – 23 / 22 – 31)	

Apply sealer to the dashboard fitting face.

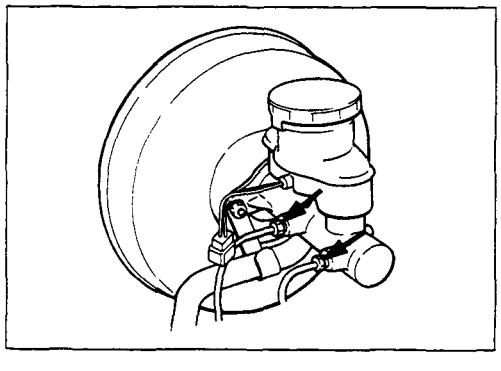

3. Brake Line

Torque	kg·m(lb.ft/N·m)
0.9 – 1.5 (6.5 – 11 / 9 – 15)	

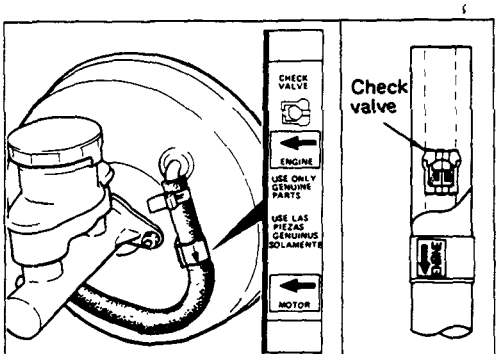

2. Vacuum Hose

1) When removing or replacing the vacuum hose make sure that the arrow on the label of the hose is facing the engine.
2) Also confirm that the check valve is facing the engine.

PARKING BRAKE (STEM TYPE)

REMOVAL AND INSTALLATION

PARKING BRAKE STEM ASSEMBLY (LEFT HAND DRIVE MODEL)

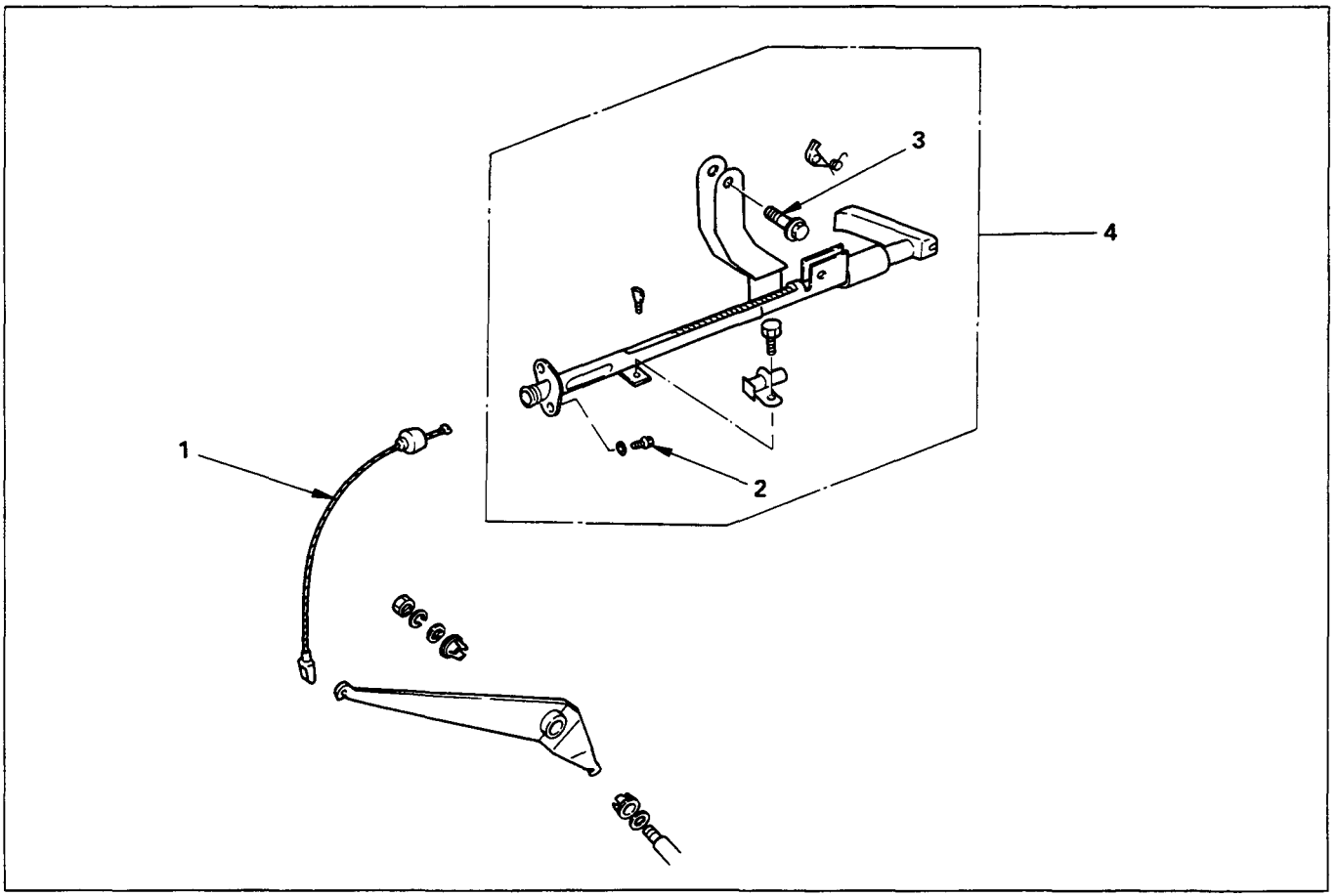

Removal Steps

1. Cable front, relay lever side
2. Bolt ; bracket to dash
3. Bolt ; bracket to cross beam
4. Parking brake stem assembly

Installation Steps

To install, follow the removal procedure in reverse order.

PARKING BRAKE STEM ASSEMBLY (RIGHT HAND DRIVE MODEL)

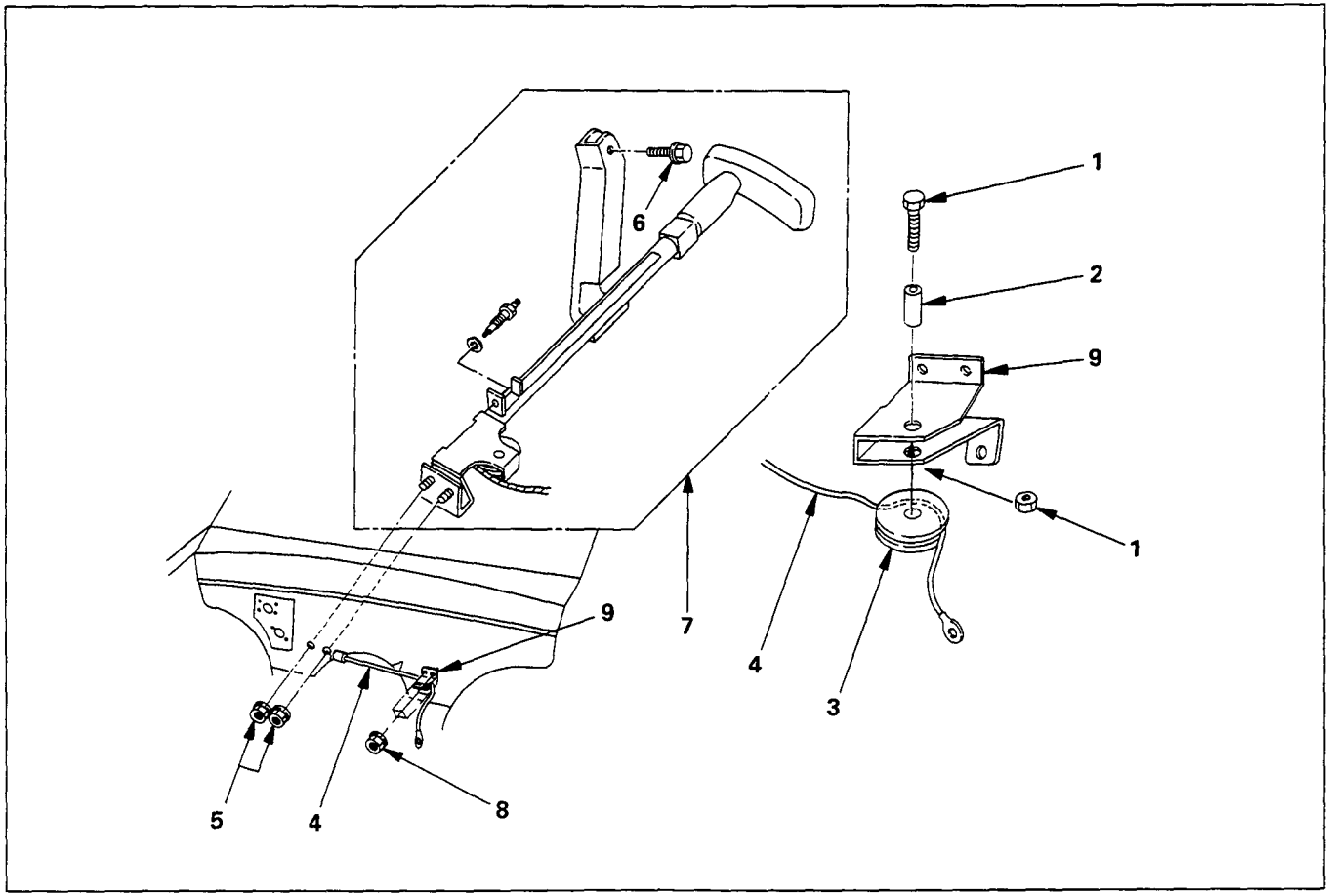

Removal Steps

1. Bolt and nut
2. Collar
3. Roller
4. Cable front, relay lever side
5. Nuts ; bracket to dash
6. Bolt ; bracket to cross beam
7. Parking brake stem assembly
8. Nuts
9. Bracket ; roller

Installation Steps

To install, follow the removal procedure in reverse order.

Before installation, apply chassis grease to the roller (3)'s contact surface to the collar (2) and cable (4).

FRONT AND REAR CABLE ASSEMBLY

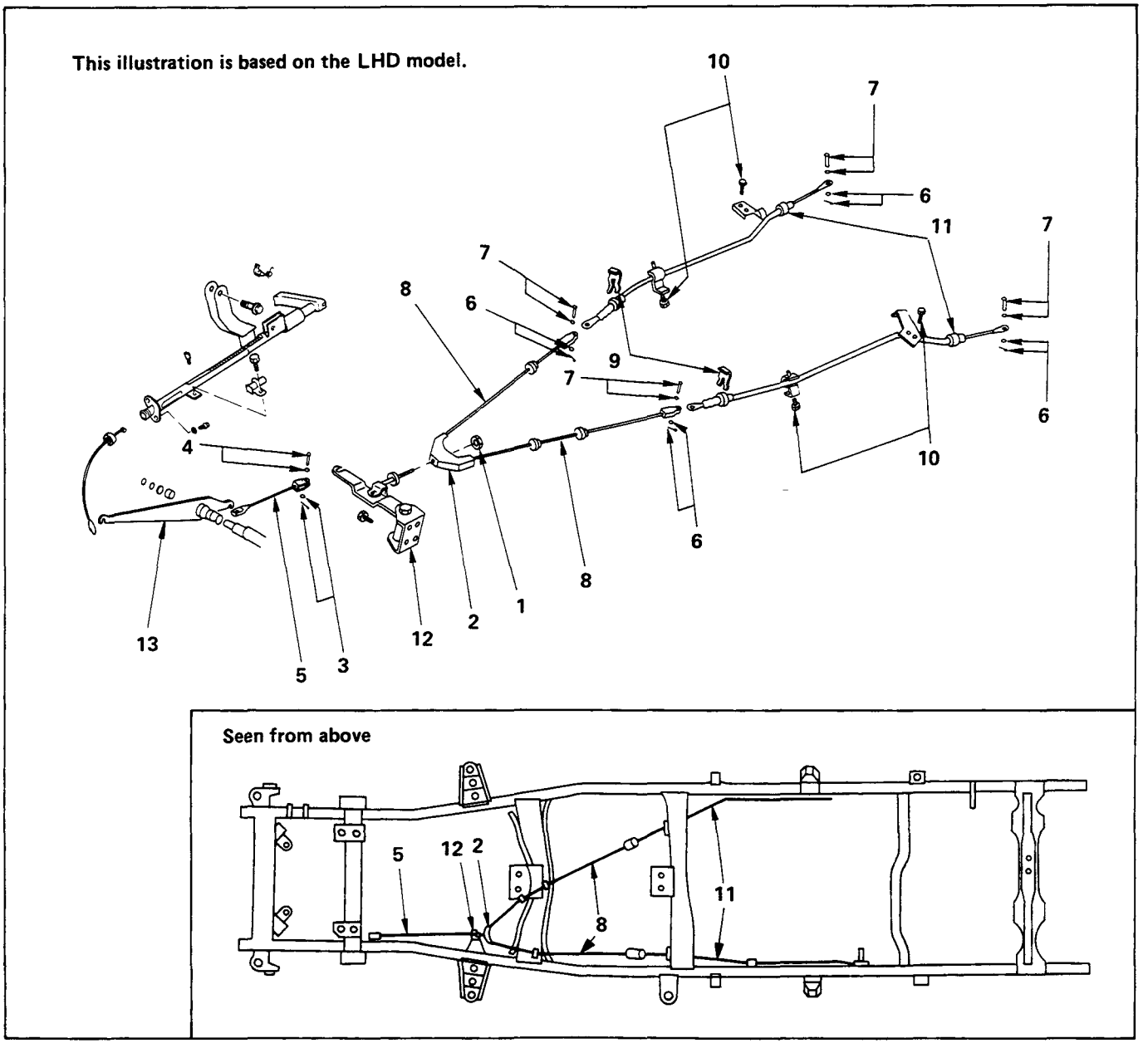

Removal Steps

1. Nut
2. Equalizer bracket
3. Snap pin, with plain washer
4. Pin with curved washer
5. Cable ; front lower
6. Snap pin, with plain washer
7. Pin with curved washer
8. Intermediate cable
9. Clip
10. Clip ; fixing bracket
▲ 11. Cable assembly ; rear
12. 2nd relay lever assembly with return spring
13. 1st relay lever assembly

Installation Steps

▲ 13. 1st relay lever assembly
▲ 12. 2nd relay lever assembly with return spring
11. Cable assembly ; rear
10. Clip ; fixing bracket
9. Clip
▲ 8. Intermediate cable
▲ 7. Pin with curved washer
▲ 6. Snap pin, with plain washer
5. Cable ; front lower
4. Pin with curved washer
▲ 3. Snap pin, with plain washer
2. Equalizer bracket
1. Nut

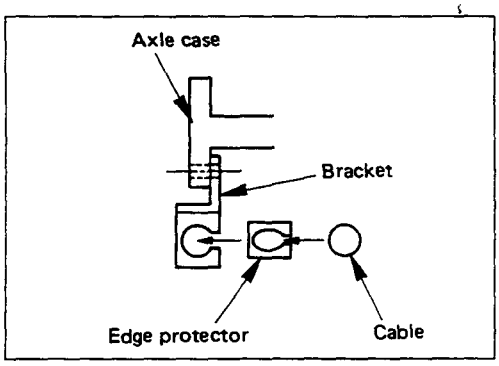

Important Operations – Removal

11. Cable Assembly ; Rear

When abrasion or wear is evident on edge protector, in must be replaced with new one.

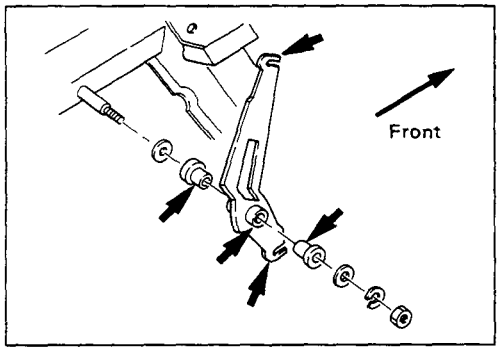

Important Operations – Installation

13. 1st Relay Lever Assembly

Apply grease (BESCO L-2 or equivalent) to the inner and outer surface of the bushes and cable connecting portions.

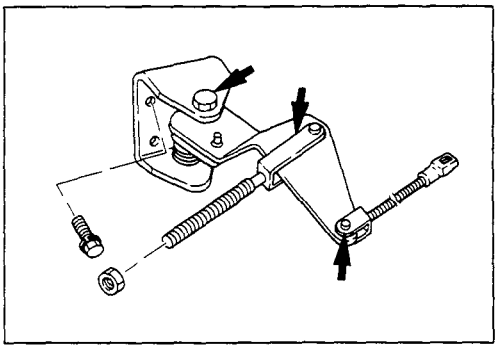

12. 2nd Relay Lever Assembly with Return Spring

Apply grease (BESCO L-2 or equivalent) to the arrowed portion in the left figure.

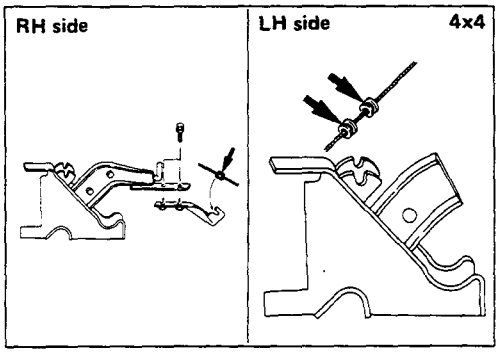

8. Intermediate Cable

After applying grease (BESCO L-2 or equivalent) to the cable guide, set it to the bracket by striking lightly with a mallet.

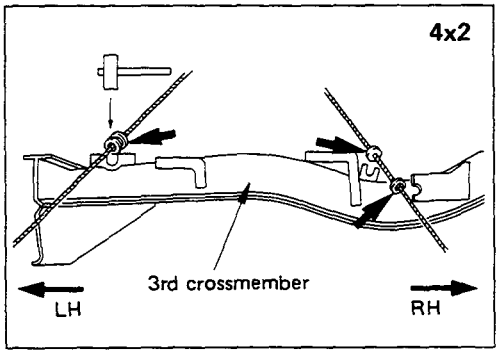

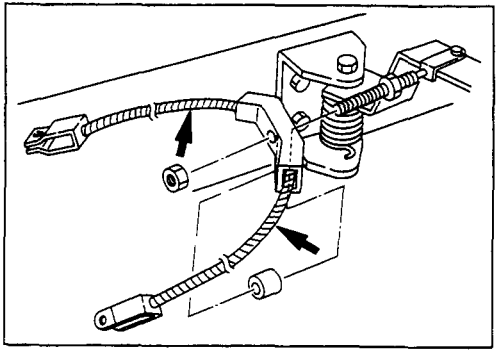

Apply grease (BESCO L-2 or equivalent) to the arrowed portion in the left figure.

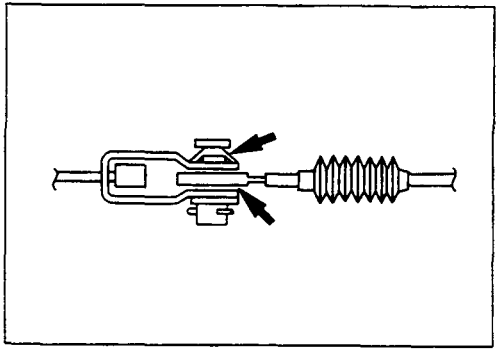

7. Pin with Curved Washer

Apply grease (BESCO L-2 or equivalent) to the circumference of the pin and joint.

6. Snap pin, with Plain Washer

3. Snap pin, with Plain Washer

Discard the used snap pins and use new parts.

DISASSEMBLY AND REASSEMBLY

PARKING BRAKE STEM ASSEMBLY

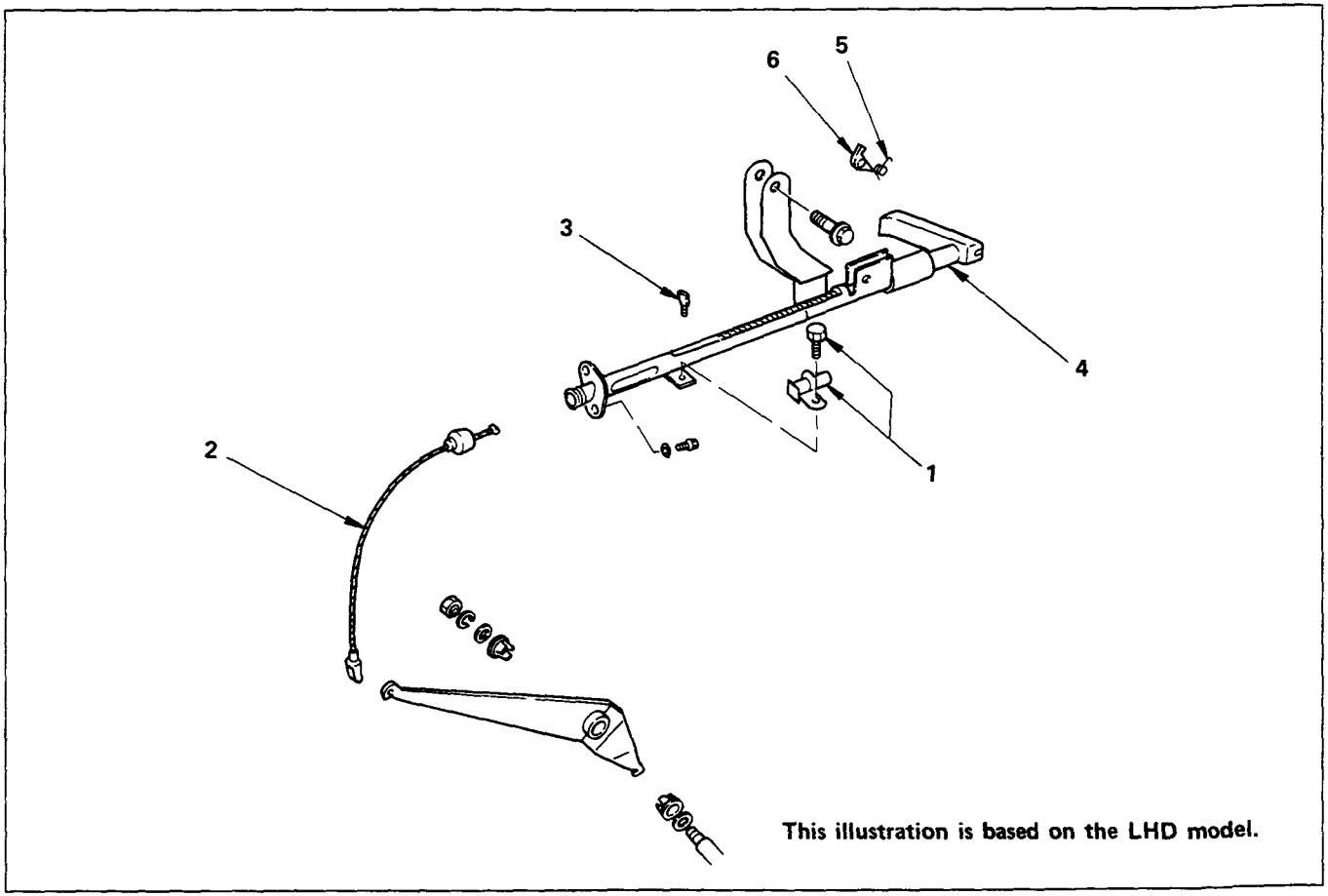

This illustration is based on the LHD model.

Disassembly Steps

1. Switch ; parking brake and bolt
▲ 2. Cable ; front
▲ 3. Switch actuating pin
4. Stem
5. Spring
6. Pole

Reassembly Steps

▲ 6. Pole
5. Spring
▲ 4. Stem
3. Switch actuating pin
▲ 2. Cable ; front
1. Switch ; parking brake and bolt

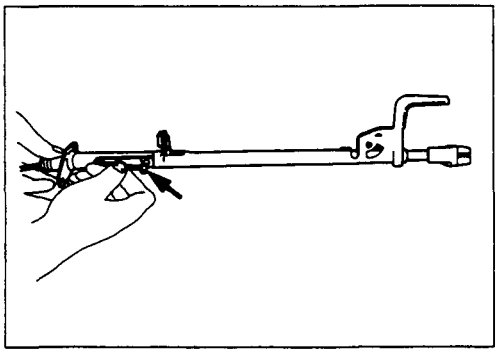

Important Operations – Disassembly

2. Cable ; Front

Manually release the lever ratchet and depress the stem until the cable attachment at the lower end of the stem is visible. Remove the cable from the stem lower end.

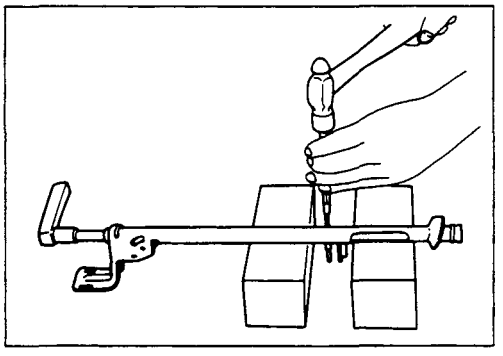

3. Switch Actuating Pin

Align the parking brake switch actuating pin with the hole in the housing. Using a flat head punch, drive out the pin.

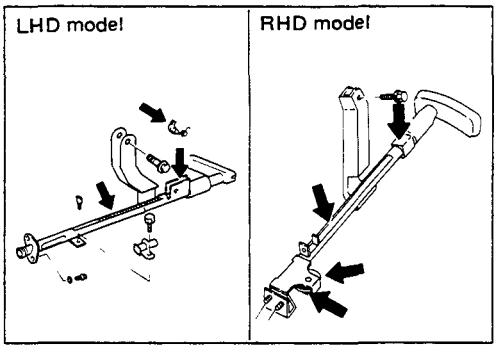

Important Operations – Reassembly

6. Pole

4. Stem

Before reassembly, apply chassis grease to the arrowed portion in the left figures.

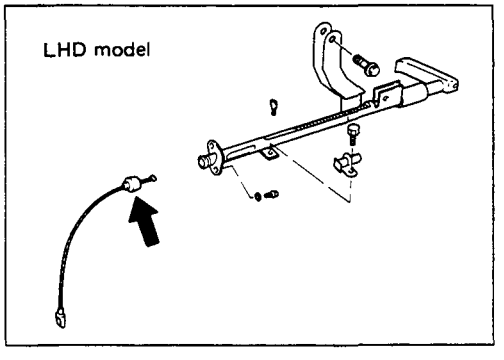

2. Cable ; Front

Before reassembly, apply chassis grease to the entire inside surface of the cable boot (arrowed in the left figure) fully.

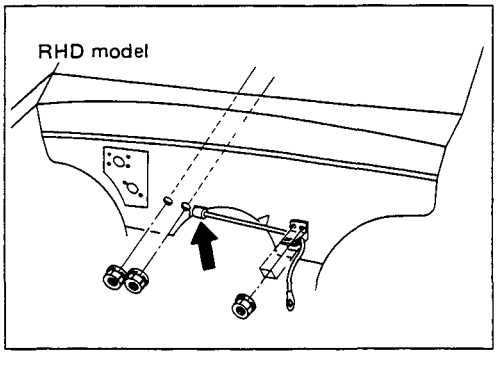

INSPECTION AND REPAIR

Make necessary adjustments, repairs, and parts replacements if wear, damage or other problems are discovered during inspection.

Refer to "SERVICING" in this section for adjustment procedure of parking brake.

Adjustment Procedure of Parking Brake

- Parking brake

PARKING BRAKE (FLOOR MOUNT TYPE)

REMOVAL AND INSTALLATION

PARKING BRAKE LEVER AND FRONT CABLE ASSEMBLY

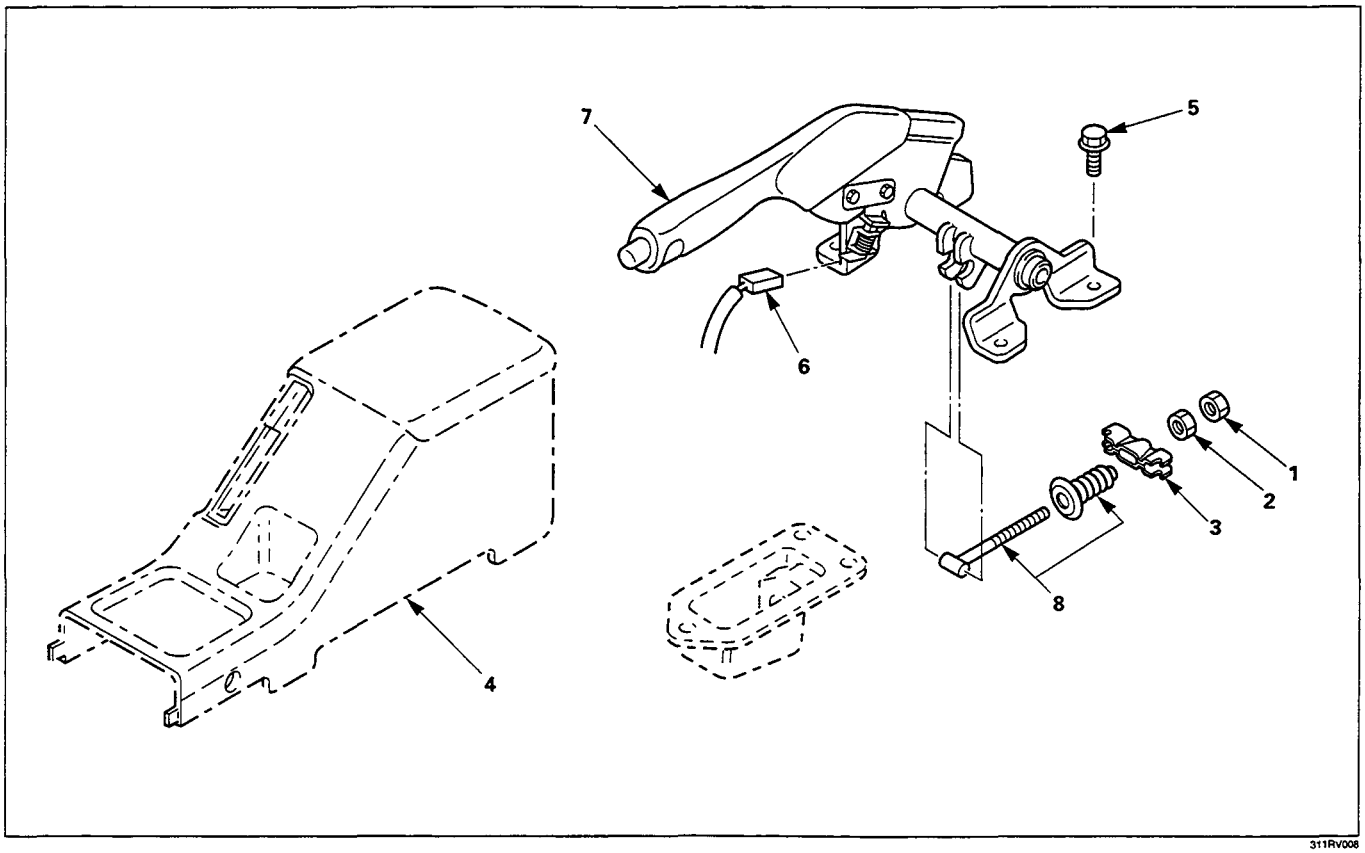

311RV008

Removal Steps

1. Lock nut
2. Adjust nut
3. Equalizer
4. Center console
5. Bolt
6. Switch connector
7. Parking brake lever
8. Parking brake front cable

Installation Steps

▲ 8. Parking brake front cable
7. Parking brake lever
6. Switch connector
▲ 5. Bolt
4. Center console
3. Equalizer
2. Adjust nut
1. Lock nut

Important Operation – Installation

8. Parking Brake Front Cable

Apply grease (BESCO L-2 or equivalent) to the front cable before installation.

- After installation, be sure to adjust the parking brake. Refer to "SERVICING" of this section.

REAR CABLE ASSEMBLY

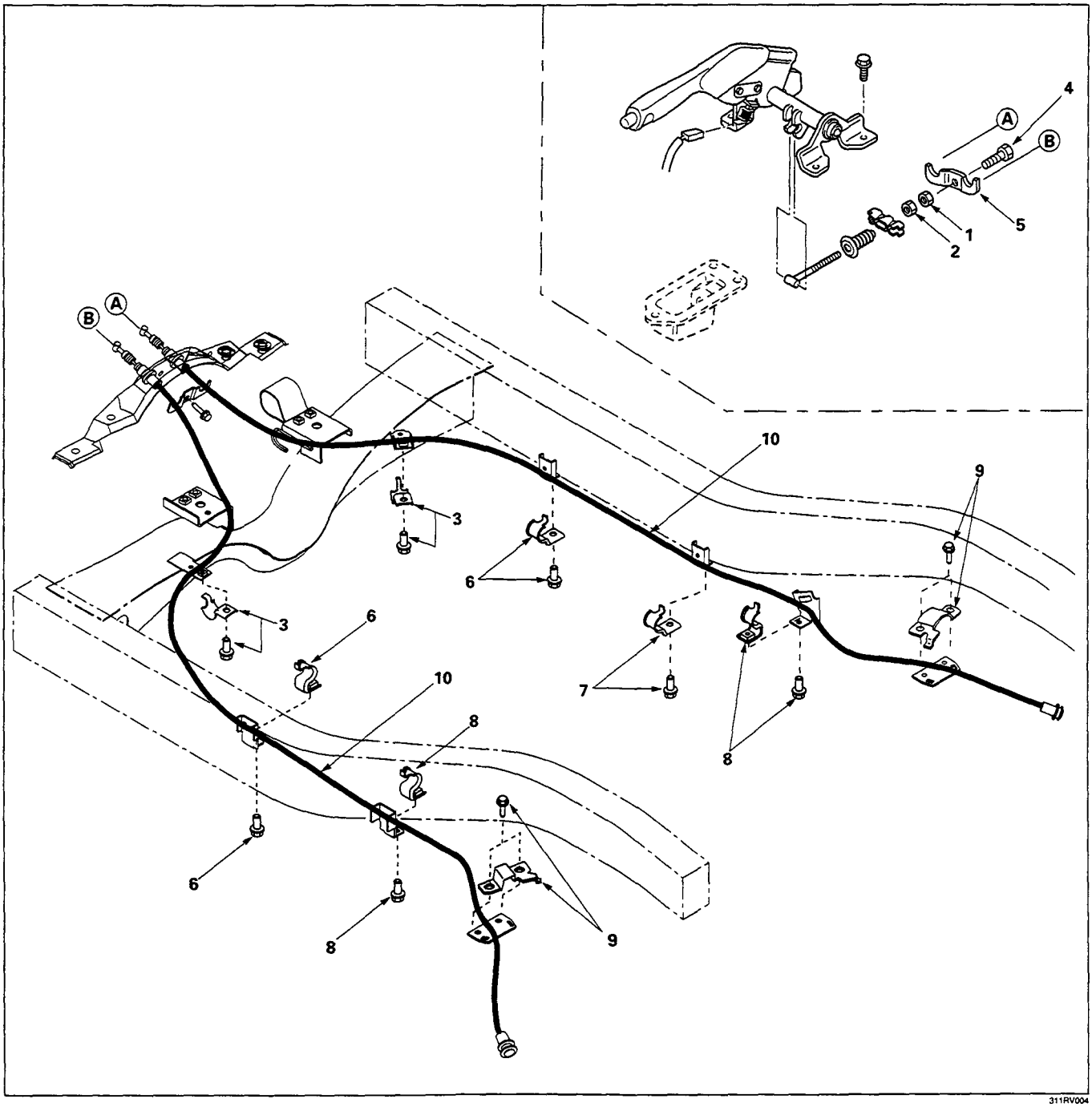

Removal Steps

- ▲ 1. Lock nut
- ▲ 2. Adjusting nut
- 3. Clip and bolt; cross member
- ▲ 4. Bolt
- ▲ 5. Retainer
- 6. Clip and bolt; side member
- 7. Clip and bolt; side member
- 8. Clip and bolt; spring eye
- 9. Clip and bolt; leaf spring
- ▲10. Hand brake rear cable

Installation Steps

- ▲10. Hand brake rear cable
- ▲ 9. Clip and bolt; leaf spring
- ▲ 8. Clip and bolt; spring eye
- ▲ 7. Clip and bolt; side member
- ▲ 6. Clip and bolt; side member
- ▲ 5. Retainer
- ▲ 4. Bolt
- ▲ 3. Clip and bolt; cross member
- ▲ 2. Adjusting nut
- ▲ 1. Lock nut

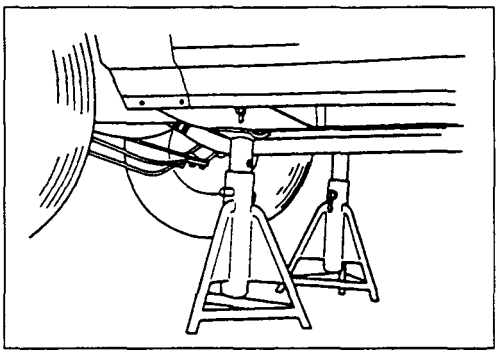

Important Operations – Removal

Preparation

- Raise vehicle to the working level. Support the axle assembly with the proper jack and chassis stands.
- Remove the tire and wheel.
- Remove the brake drum.

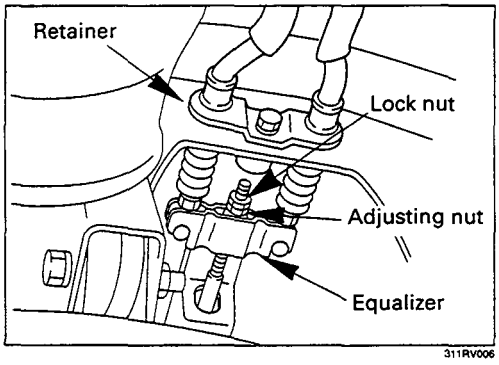

1. **Lock Nut**
2. **Adjusting Nut**
4. **Bolt**
5. **Retainer**
   - Loosen lock nut and adjusting nut, then disconnect rear cable from the equalizer.
   - Remove bolt and retainer.

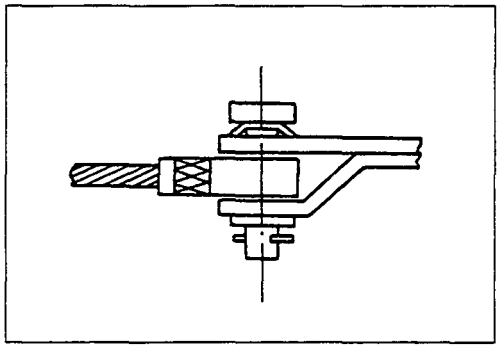

- Remove pin and curved washer of the rear brake, then disconnect rear cable.

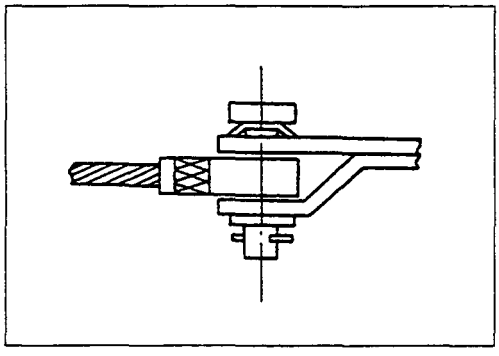

Important Operations – Installation

10. **Hand Brake Rear Cable**
    - Apply grease (BESCO L-2 or equivalent) to the circumference of the pin and joint.
    - Apply grease (BESCO L-2 or equivalent) to the equalizer joint portion.

9. **Clip and Bolt; Leaf Spring**
8. **Clip and Bolt; Spring Eye**
7. **Clip and Bolt; Side Member**
6. **Clip and Bolt; Side Member**
3. **Clip and Bolt; Cross Member**

Torque	kg·m(lb.ft/N·m)
	0.6 (4.3 / 6)

5. **Retainer**
4. **Bolt**

Torque	kg·m(lb.ft/N·m)
0.6 (4.3 / 16)	

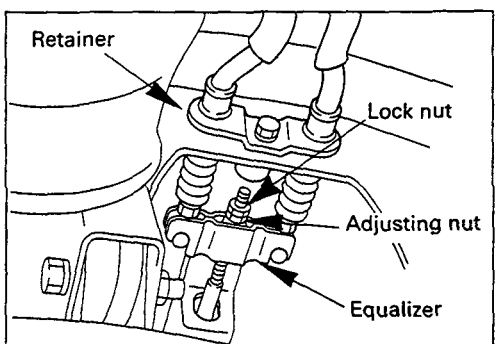

2. **Adjusting Nut**
1. **Lock Nut**
   - Apply grease (BESCO L-2 or equivalent) to the front cable contact portion.
   - Connect rear cable to the equalizer, then adjust the parking brake. Refer to "SERVICING".
   - Tighten lock nut to the specified torque.

Torque	kg·m(lb.ft/N·m)
0.6 (4.3 / 16)	

TROUBLESHOOTING

Condition and Cause	Correction
Poor Brake Action	
Master cylinder faulty	Correct or replace
Power cylinder faulty	Correct or replace
Level of brake fluid in reservoir too low	Replenish and bleed
Air in hydraulic circuit	Bleed
Front disc brake caliper faulty	Clean or replace
Rear brake wheel cylinder faulty	Clean or replace
Water or oil on brake pads or linings	Clean or replace
Brake pads or linings hardened	Replace
Brake pads or linings in poor contact with rotor or brake drum	Correct
Brake pads or linings worn	Replace
Brake disc or drum rusted	Grind or replace
Check valve in vacuum hose faulty	Correct or replace
Brake Squeak	
Brake pads or linings worn	Replace
Brake pads or linings hardened	Replace
Brake pads or linings in poor contact with rotor or brake drum	Correct
Brake disc(s) warped, worn or damaged	Grind or replace
Disc brake anti-squeak shims fatigued	Replace
Front hub bearings loose or preload is incorrect	Adjust or replace
Brake disc or drum rusted	Grind or replace
Brake Pull	
Tire inflation pressures unequal	Adjust
Front wheel alignment incorrect	Adjust
Water or oil on brake pads or linings	Clean or replace
Brake pads or linings hardened	Replace
Brake pads or linings worn excessively	Replace
Brake drum or rotor worn or scored	Grind or replace
Front or rear wheel cylinder or disc brake caliper malfunctioning	Clean or replace
Front hub bearing preload incorrect	Adjust or replace
Brake pad or lining clearances unequal	Adjust or replace
Brake Drag	
Parking brake maladjusted	Adjust
Brake pad or lining clearance insufficient	Adjust
Brake pedal free play insufficient	Adjust brake pedal height or power cylinder operating rod
Piston in master cylinder sticking	Clean or replace
Pistons in disc brake caliper sticking	Replace piston seals
Pistons in rear brake wheel cylinders sticking	Clean or replace
Brake pads sticking in caliper	Clean
Return springs weakened	Replace
Parking brake binding	Overhaul rear brakes
Front hub bearing preload incorrect	Adjust or replace
Rear brake shoes not returning	Correct or replace brake back plate, check automatic adjuster and replace as necessary
Obstructions in hydraulic circuit	Clean
Rotor warped excessively	Grind or replace
Rear brake drum distorted	Grind or replace
Piston cups swollen	Replace brake fluid and piston cups
Check valve ; vacuum hose faulty	Replace
Parking cable sticking	Clean or replace
Rear disc brake over adjust	Adjust or overhaul rear brakes
Excessive Brake Pedal Travel	
Air in hydraulic circuit	Bleed hydraulic circuit
Level of brake fluid in reservoir too low	Replenish brake fluid reservoir to specified level and bleed hydraulic circuit as necessary.
Master cylinder push rod clearance excessive	Adjust
Leakage in hydraulic system	Correct or replace defective parts
Rear disc brake autoadjuster malfunction	Overhaul rear brakes

ISUZU

KB - SERIES

WORKSHOP MANUAL

SECTION 6

DIESEL ENGINE DIAGNOSIS

ISUZU

KB - SERIES

WORKSHOP MANUAL

SECTION 6

DIESEL ENGINE DIAGNOSIS

SECTION 6

TROUBLESHOOTING

TABLE OF CONTENTS

PAGE

Hard Starting . . . . . 6 – 3
Starter Motor Inoperative . . . . . 6 – 3
Starter Motor Operates But Engine Does Not Turn Over . . . . . 6 – 4
Engine Turns Over But Does Not Start . . . . . 6 – 5
Unstable Idling . . . . . 6 – 8
Insufficient Power . . . . . 6 – 11
Excessive Fuel Consumption . . . . . 6 – 14
Excessive Oil Consumption . . . . . 6 – 16
Overheating . . . . . 6 – 17
White Exhaust Smoke . . . . . 6 – 19
Dark Exhaust Smoke . . . . . 6 – 20
Oil Pressure Does Not Rise . . . . . 6 – 21
Abnormal Engine Noise . . . . . 6 – 23
Turbocharger . . . . . 6 – 26

Refer to the following troubleshooting charts to quickly pinpoint and repair engine problems.

1. This Section is divided into ten Sub-Sections.
   Refer to the Table of Contents.
2. Each troubleshooting chart has three headings arranged from left to right.
   Example:

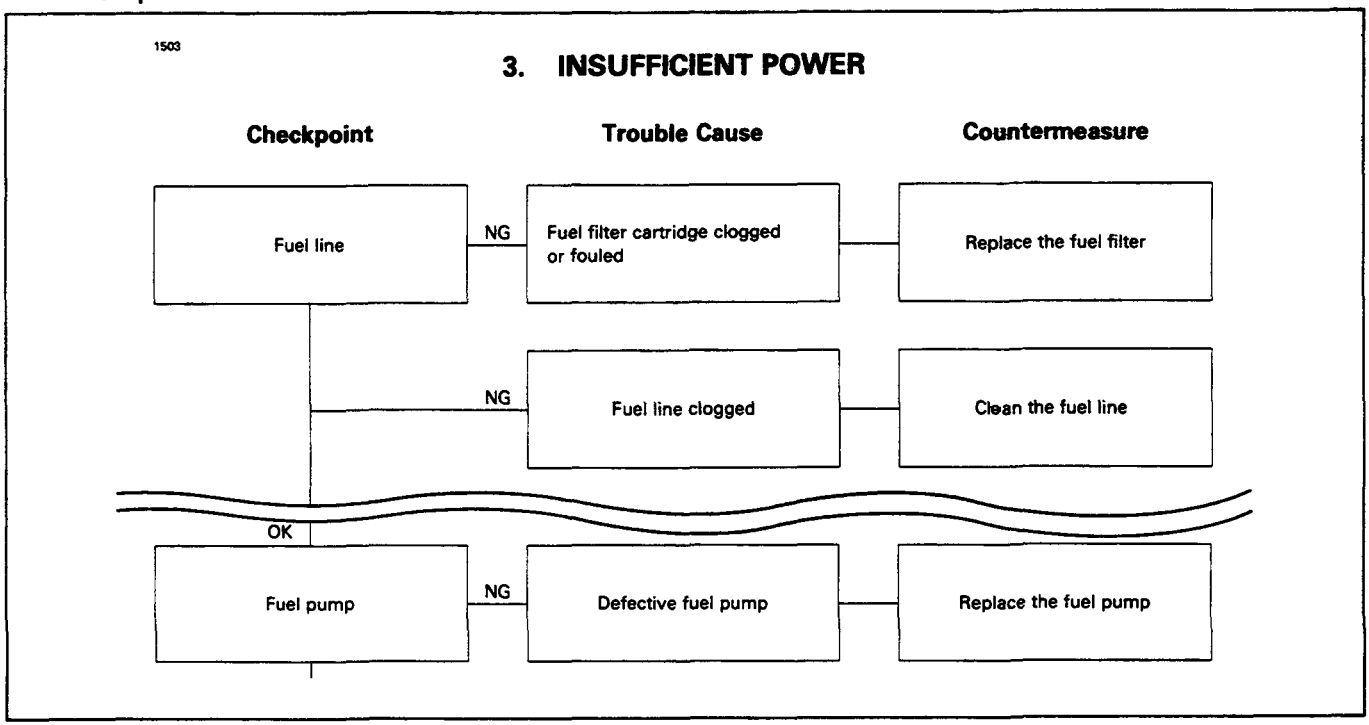

3. Easily checked areas are presented at the beginning of the troubleshooting chart. Procedures become more complex as the chart progresses.
4. It is suggested that you work from the beginning of the troubleshooting chart. Do not start from the middle.
5. It is possible that a seemingly apparent engine problem is not related to the engine.
   For example, the engine may appear to have insufficient power. This could be caused by dragging brakes or a slipping clutch instead of an engine malfunction.
   Refer to the other troubleshooting charts if required.
6. Optional equipment and variations are included in the troubleshooting charts.
   If the vehicle you are servicing is not equipped with a particular option or variation noted in the "Checkpoint" frame, disregard the frame and move on to the next one.

1. HARD STARTING

1. STARTER MOTOR INOPERATIVE

Checkpoint		Trouble Cause	Countermeasure
Battery	NG	Loose battery cable terminals Poor connections due to rusting	Clean and/or retighten the battery cable terminals
	NG	Battery discharged or weak	Recharge or replace the battery
	NG	Fan belt loose or broken	Adjust or replace the fan belt
OK			
Main fuse	NG	Main fuse shorted	Replace the main fuse
OK			
Starter switch	NG	Defective starter switch or starter relay	Replace the starter switch or the starter relay
OK			
Starter motor	NG	Defective magnetic switch or starter relay	Repair or replace the magnetic switch
	NG	Defective starter motor	Repair or replace the starter motor

150102

2. STARTER MOTOR OPERATES BUT ENGINE DOES NOT TURN OVER

Checkpoint		Trouble Cause	Countermeasure
Battery	NG	Loose battery cable terminals Poor connections due to rusting	Clean and/or retighten the battery cable terminals
	NG	Battery discharged or weak	Recharge or replace the battery
	NG	Fan belt loose or broken	Adjust or replace the fan belt
OK			
Starter motor	NG	Defective pinion gear	Replace the pinion gear
	NG	Defective magnetic switch	Repair or replace the magnetic switch
	NG	Brush wear Weak brush spring	Replace the brush and/or the brush spring
OK			
Engine	NG	Piston, crank bearing seizure, or other damage	Repair or replace the related parts

3. ENGINE TURNS OVER BUT DOES NOT START

Checkpoint		Trouble Cause		Countermeasure
Engine stop mechanism	NG	Defective fuel cut solenoid valve	—	Replace the fuel cut solenoid valve

1500010301

FUEL IS NOT BEING DELIVERED TO THE INJECTION PUMP

Fuel	NG	Fuel tank is empty	—	Fill the fuel tank
OK				
Fuel piping	NG	Clogged or damaged fuel lines Loose fuel line connections	—	Repair or replace the fuel lines Retighten the fuel line connections
OK				
Fuel filter	NG	Fuel filter overflow valve does not close	—	Repair or replace the fuel filter overflow valve
	NG	Clogged fuel filter element	—	Replace the fuel filter element or the fuel filter cartridge
OK				
Fuel system	NG	Air in the fuel system	—	Bleed the air from the fuel system
OK				
Fuel feed pump	NG	Defective feed pump	—	Repair or replace the feed pump

1500010302

FUEL IS BEING DELIVERED TO THE INJECTION PUMP

Checkpoint		Trouble Cause	Countermeasure
Fuel	NG	Use of the wrong fuel	Use the correct fuel
	NG	Water particles in the fuel	Change the fuel
OK			
Fuel system	NG	Air in the injection pump	Bleed the air from the fuel system
OK			
Injection nozzle	NG	Injection nozzle sticking	Replace the injection nozzle
	NG	Injection nozzle injection starting pressure too low Improper spray condition	Adjust or replace the injection nozzle
OK			
Injection pump	NG	Defective fuel injection nozzle resulting in fuel drippage after fuel injection	Replace the delivery valve
	NG	Injection pump plunger worn or stuck	Replace the injection pump plunger assembly

Continued on the next page

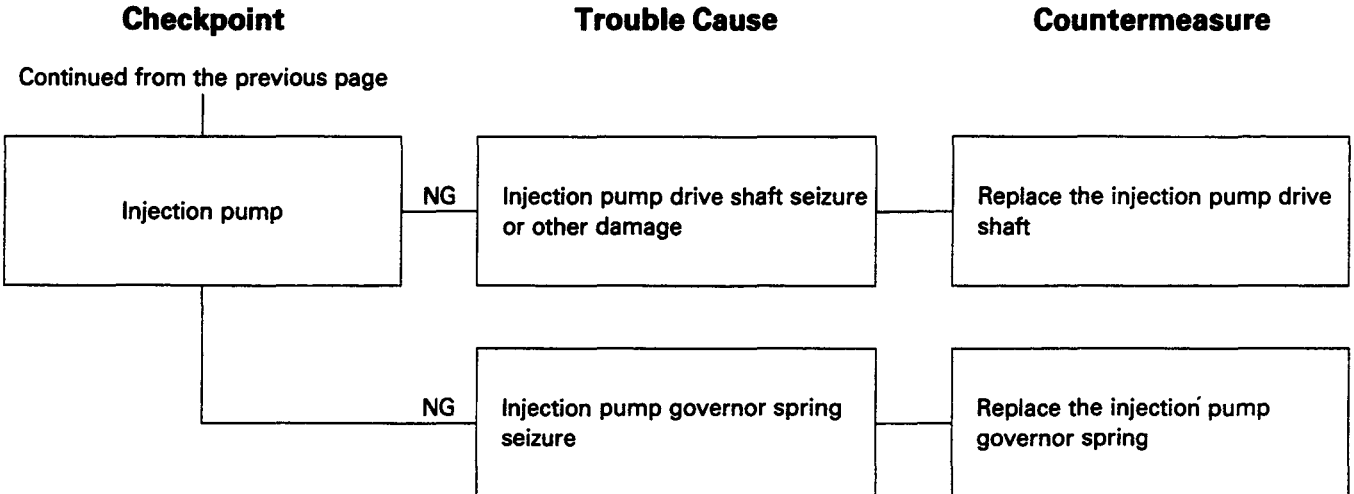
Checkpoint
Trouble Cause
Countermeasure
Continued from the previous page
Injection pump
NG
Injection pump drive shaft seizure or other damage
Replace the injection pump drive shaft
NG
Injection pump governor spring seizure
Replace the injection pump governor spring

2. UNSTABLE IDLING

Checkpoint		Trouble Cause	Countermeasure
Idling system	NG	Idling improperly adjusted	Adjust the idling
OK			
Fast idling speed control device	NG	Defective fast idling speed control device	Repair or replace the fast idling speed control device
OK			
Accelerator control system	NG	Accelerator control system improperly adjusted	Adjust the accelerator control system
OK			
Fuel system	NG	Fuel system leakage or blockage	Repair or replace the fuel system
	NG	Air in the fuel system	Bleed the air from the fuel system
	NG	Water particles in the fuel system	Change the fuel
OK			
Fuel filter	NG	Clogged fuel filter element	Replace the fuel filter cartridge the fuel filter cartridge

Continued on the next page

Continued from the previous page

Checkpoint		Trouble Cause	Countermeasure
Fuel feed pump	NG	Defective fuel feed pump	Replace the fuel feed pump
Injection nozzle	NG	Injection nozzle sticking	Replace the injection nozzle
	NG	Injection nozzle injection starting pressure too low Improper spray condition	Adjust or replace the injection nozzle
Injection pump	NG	Defective delivery valve resulting in fuel drippage after fuel injection	Replace the delivery valve
	NG	Injection timing improperly adjusted	Adjust the injection timing
	NG	Insufficient injection volume	Adjust the injection volume
	NG	Defective idle spring	Replace the idle spring

Continued on the next page

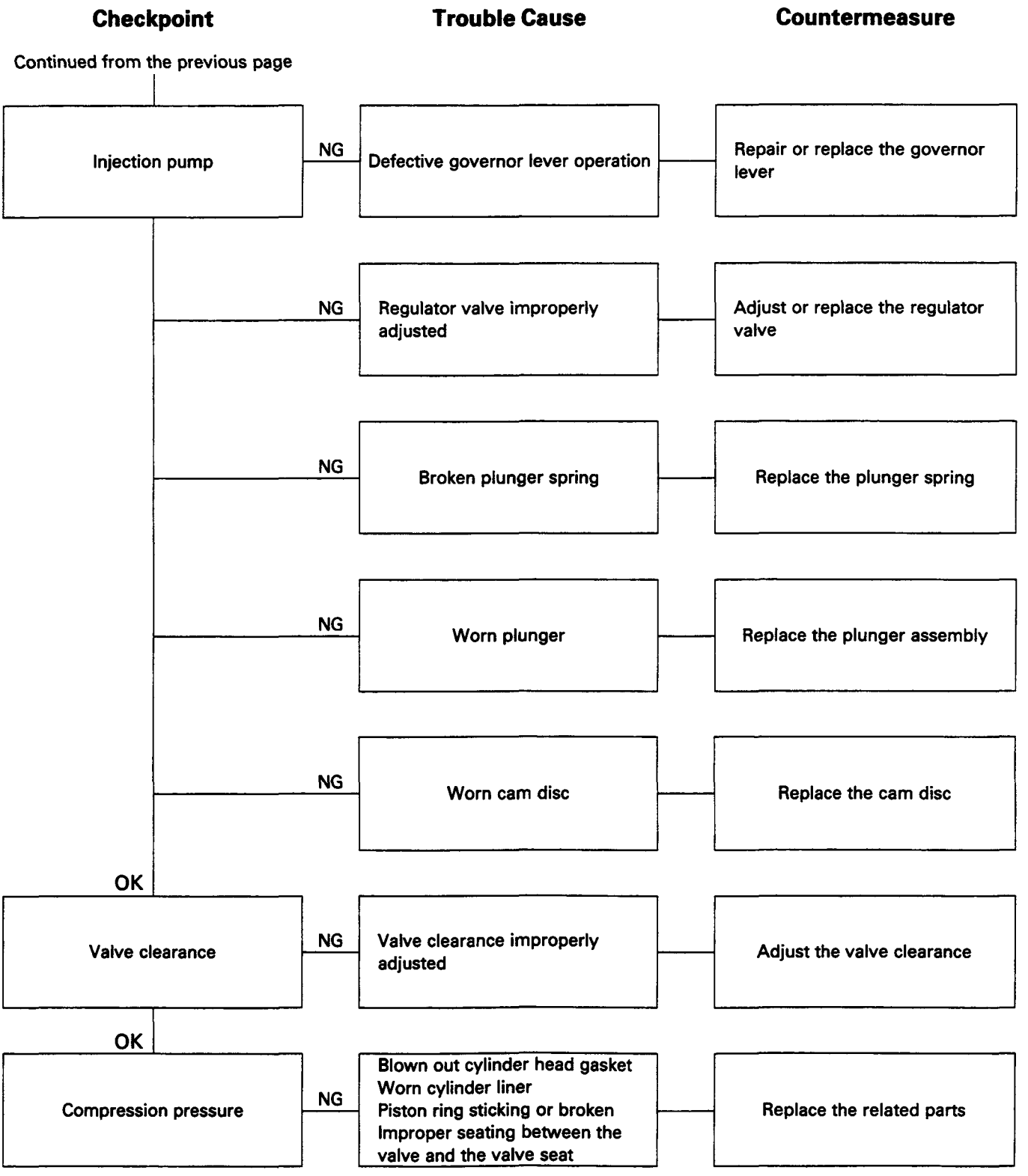
Checkpoint
Trouble Cause
Countermeasure
Continued from the previous page
Injection pump
NG
Defective governor lever operation
Repair or replace the governor lever
NG
Regulator valve improperly adjusted
Adjust or replace the regulator valve
NG
Broken plunger spring
Replace the plunger spring
NG
Worn plunger
Replace the plunger assembly
NG
Worn cam disc
Replace the cam disc
OK
Valve clearance
NG
Valve clearance improperly adjusted
Adjust the valve clearance
OK
Compression pressure
NG
Blown out cylinder head gasket
Worn cylinder liner
Piston ring sticking or broken
Improper seating between the valve and the valve seat
Replace the related parts

1503

3. INSUFFICIENT POWER

Checkpoint		Trouble Cause	Countermeasure
Air cleaner	NG	Clogged air cleaner element	Clean or replace the air cleaner element
OK			
Fuel	NG	Water particles in the fuel	Replace the fuel
OK			
Fuel filter	NG	Clogged fuel filter element	Replace the fuel filter element or the fuel filter cartridge
OK			
Fuel feed pump	NG	Defective fuel feed pump	Repair or replace the fuel feed pump
OK			
Injection nozzle	NG	Injection nozzle sticking	Replace the injection nozzle
	NG	Injection nozzle injection starting pressure too low Improper spray condition	Adjust or replace the injection nozzle
OK			
Fuel injection pipes	NG	Fuel injection pipes damaged or obstructed	Replace the fuel injection pipes

Continued on the next page

Continued from the previous page

Checkpoint		Trouble Cause	Countermeasure
Injection pump	NG	Defective regulating valve	Repair or replace the regulating valve
	NG	Defective delivery valve	Replace the delivery valve
	NG	Defective timer	Repair or replace the timer
	NG	Worn cam disk	Replace the cam disk
	NG	Improper control lever operation	Adjust or replace the control lever
	NG	Defective injection timing	Adjust the injection timing Repair or replace the injection pump timer
	NG	Weak governor spring	Replace the governor spring

OK

Continued on the next page

Continued from the previous page

Checkpoint		Trouble Cause	Countermeasure
Injection pump	NG	Worn plunger	Replace the plunger assembly
	NG	Worn cam disc	Replace the cam disc
Compression pressure	NG	Blown out cylinder head gasket Worn cylinder liner Piston ring sticking or broken Improper seating between the valve and the valve seat	Replace the related parts
Valve clearance	NG	Valve clearance improperly adjusted	Adjust the valve clearance
Valve spring	NG	Valve spring weak or broken	Replace the valve spring
Exhaust system	NG	Exhaust pipe clogged	Clean the exhaust pipe
Full load adjusting screw seal	NG	Open and improperly set adjusting screw seal	Adjust and reseal the adjusting screw

OK

1504

4. EXCESSIVE FUEL CONSUMPTION

Checkpoint		Trouble Cause	Countermeasure
Fuel system	NG	Fuel leakage	Repair or replace the fuel system related parts
OK			
Air cleaner	NG	Clogged air cleaner element	Clean or replace the air cleaner element
OK			
idling speed	NG	Poorly adjusted idling speed	Adjust the idling speed
OK			
Injection nozzle	NG	Injection nozzle injection starting pressure too low Improper spray condition	Adjust or replace the injection nozzle
OK			
Fuel injection timing	NG	Fuel injection timing improperly adjusted	Adjust the fuel injection timing
OK			
Injection pump	NG	Defective delivery valve resulting in fuel drippage after fuel injection	Replace the delivery valve
OK			
Valve clearance	NG	Valve clearance improperly adjusted	Adjust the valve clearance

Continued on the next page

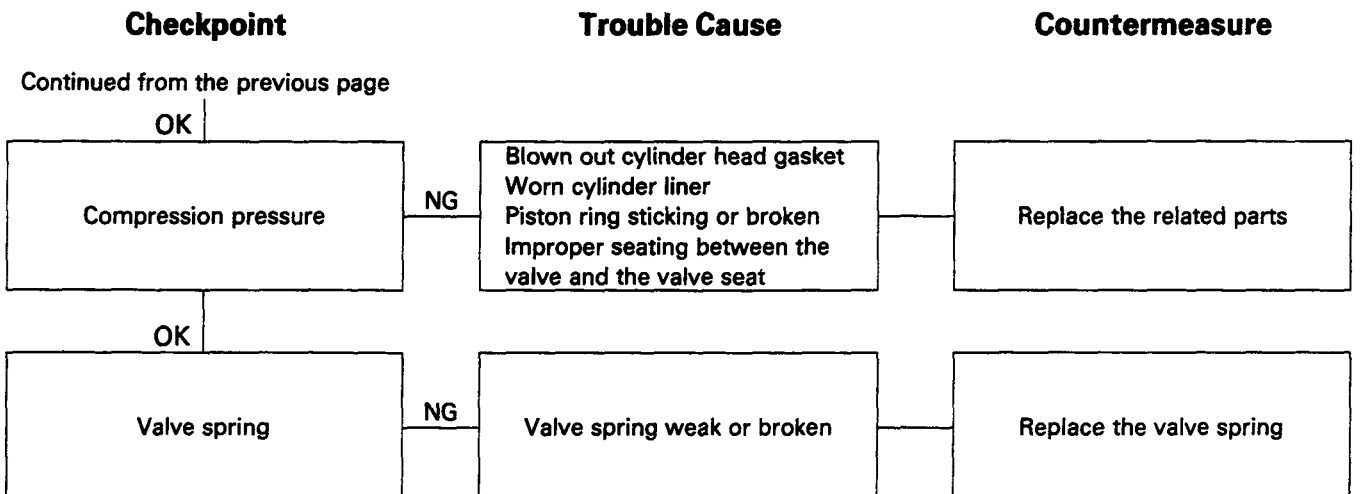
Checkpoint
Trouble Cause
Countermeasure
Continued from the previous page
OK
Compression pressure
NG
Blown out cylinder head gasket
Worn cylinder liner
Piston ring sticking or broken
Improper seating between the valve and the valve seat
Replace the related parts
OK
Valve spring
NG
Valve spring weak or broken
Replace the valve spring

1505

5. EXCESSIVE OIL CONSUMPTION

Checkpoint		Trouble Cause	Countermeasure
Engine oil	NG	Engine oil unsuitable Too much engine oil	Replace the engine oil Correct the engine oil volume
OK			
Oil seal and gasket	NG	Oil leakage from the oil seal and/or the gasket	Replace the oil seal and/or the gasket
OK			
Air breather	NG	Clogged air breather	Clean the air breather
OK			
Intake and exhaust valves	NG	Worn valve stems and valve guides	Replace the intake and exhaust valves and the valve guides

1506

6. OVERHEATING

Checkpoint		Trouble Cause	Countermeasure
Cooling water	NG	Insufficient cooling water	Replenish the cooling water
OK			
Fan coupling (if so equipped)	NG	Oil leakage from the fan coupling	Replace the fan coupling
OK			
Fan belt	NG	Fan belt loosé or cracked causing slippage	Replace the fan belt
OK			
Radiator	NG	Defective radiator cap or clogged radiator core	Replace the radiator cap or clean the radiator core
OK			
Water pump	NG	Defective water pump	Repair or replace the water pump
OK			
Cylinder head and cylinder body sealing cap	NG	Defective sealing cap resulting in water leakage	Replace the sealing cap
OK			
Thermostat	NG	Defective thermostat	Replace the thermostat

Continued on the next page

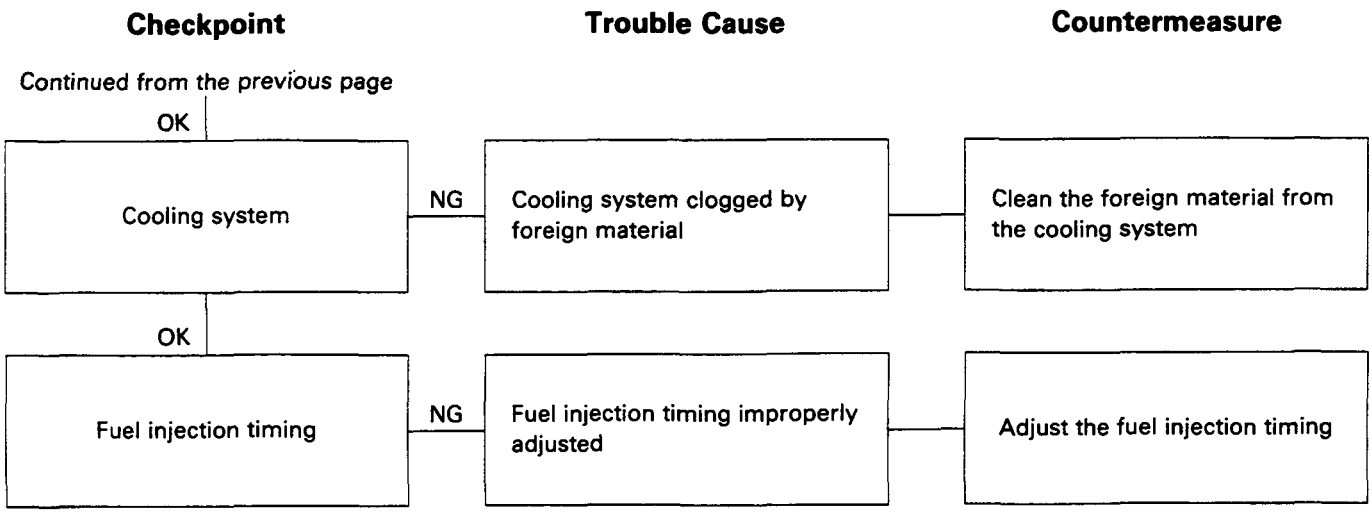
Checkpoint
Trouble Cause
Countermeasure
Continued from the previous page
OK
Cooling system
NG
Cooling system clogged by foreign material
Clean the foreign material from the cooling system
OK
Fuel injection timing
NG
Fuel injection timing improperly adjusted
Adjust the fuel injection timing

1507

7. WHITE EXHAUST SMOKE

Checkpoint		Trouble Cause	Countermeasure
Fuel	NG	Water particles in the fuel	Replace the fuel
OK			
Fuel injection timing	NG	Delayed fuel injection timing	Adjust the fuel injection timing
OK			
Compression pressure	NG	Blown out cylinder head gasket Worn cylinder liner Piston ring sticking or broken Improper seating between the valve and the valve seat	Replace the related parts
OK			
Inlet and exhaust valves Valve seals	NG	Defective valve seals Worn valve stems and valve guides	Replace the valve seals, the valves, and the valve guides

1508

8. DARK EXHAUST SMOKE

Checkpoint		Trouble Cause	Countermeasure
Air cleaner	NG	Clogged air cleaner element	Clean or replace the air cleaner element
OK			
Injection nozzle	NG	Injection nozzle injection starting pressure too low Improper spray condition	Adjust or replace the injection nozzle
OK			
Fuel injection timing	NG	Fuel injection timing improperly adjusted	Adjust the fuel injection timing
OK			
Injection pump	NG	Defective delivery valve resulting in fuel drippage after fuel injection	Replace the delivery valve
	NG	Excessive injection volume	Adjust the injection volume

1509

9. OIL PRESSURE DOES NOT RISE

Checkpoint		Trouble Cause	Countermeasure
Engine oil	NG	Improper viscosity engine oil Insufficient engine oil	Replace the engine oil Correct the engine oil volume
OK			
Oil pressure gauge or unit Oil pressure indicator light	NG	Defective oil pressure gauge or unit Defective indicator light	Repair or replace the oil pressure gauge or unit Replace the indicator light
OK			
Oil filter	NG	Clogged oil filter element	Replace the oil filter element or the oil filter cartridge
OK			
Relief valve and bypass valve	NG	Relief valve sticking and/or weak bypass valve spring	Replace the relief valve and/or the bypass valve spring
OK			
Oil pump	NG	Clogged oil pump strainer	Clean the oil pump strainer
	NG	Worn oil pump related parts	Replace the oil pump related parts
OK			
Rocker arm shaft	NG	Worn rocker arm bushing	Replace the rocker arm bushing

Continued on the next page

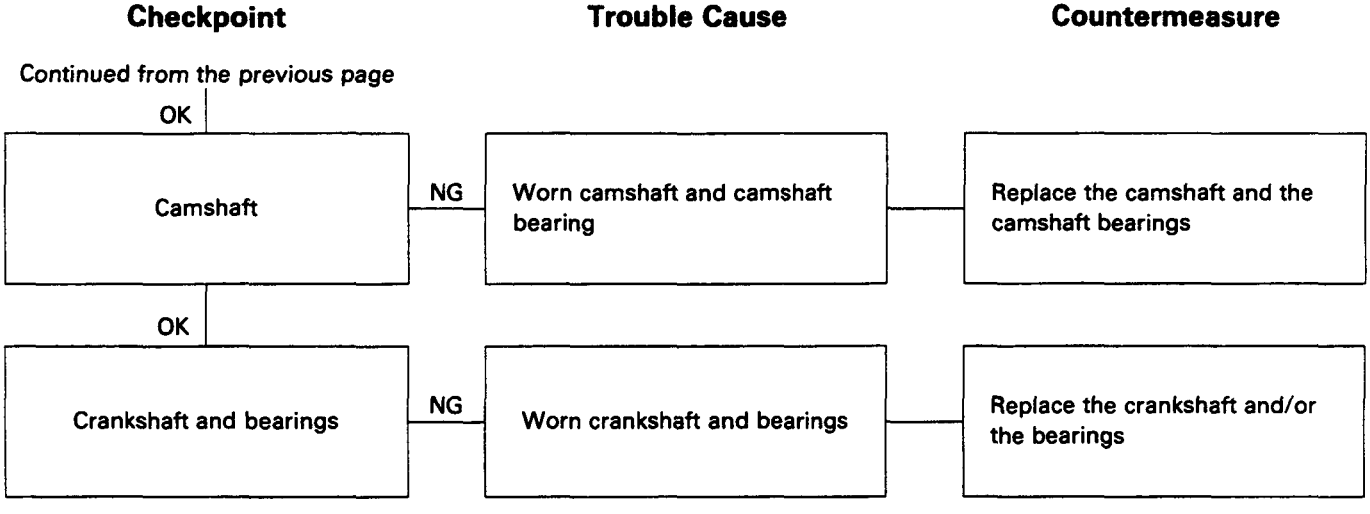
Checkpoint
Trouble Cause
Countermeasure
Continued from the previous page
OK
Camshaft
NG
Worn camshaft and camshaft bearing
Replace the camshaft and the camshaft bearings
OK
Crankshaft and bearings
NG
Worn crankshaft and bearings
Replace the crankshaft and/or the bearings

1510

10. ABNORMAL ENGINE NOISE

1. Engine Knocking

Check to see that the engine has been thoroughly warmed up before beginning the troubleshooting procedure.

Checkpoint		Trouble Cause		Countermeasure
Fuel	NG	Fuel unsuitable	—	Replace the fuel
OK				
Fuel injection timing	NG	Fuel injection timing improperly adjusted	—	Adjust the fuel injection timing
OK				
Injection nozzle	NG	Improper injection nozzle starting pressure and spray condition	—	Adjust or replace the injection nozzle
OK				
Compression pressure	NG	Blown out head gasket Broken piston ring	—	Replace the head gasket or the piston ring

2. Gas Leakage Noise

Exhaust pipes	NG	Loosely connected exhaust pipes Broken exhaust pipes	—	Tighten the exhaust pipe connections Replace the exhaust pipes
OK				
Injection nozzles and/or glow plugs	NG	Loose injection nozzles and/or glow plugs	—	Replace the washers Tighten the injection nozzles and/or the glow plugs

Continued on the next page

2. Gas Leakage Noise

Continued from the previous page

Checkpoint		Trouble Cause	Countermeasure
Exhaust manifold	NG	Loosely connected exhaust manifold and/or glow plugs	Tighten the exhaust manifold connections
Cylinder head gasket (OK)	NG	Damaged cylinder head gasket	Replace the cylinder head gasket

3. Continuous Noise

Fan belt	NG	Loose fan belt	Readjust the fan belt tension
Cooling fan (OK)	NG	Loose cooling fan	Retighten the cooling fan
Water pump bearing (OK)	NG	Worn or damaged water pump bearing	Replace the water pump bearing
Alternator or vacuum pump (OK)	NG	Defective alternator or vacuum pump	Repair or replace the alternator or the vacuum pump
Valve clearance (OK)	NG	Valve clearance improperly adjusted	Adjust the valve clearance

4. Slapping Noise

Checkpoint		Trouble Cause	Countermeasure
Valve clearance	NG	Valve clearance improperly adjusted	Adjust the valve clearance
OK			
Rocker arm	NG	Damaged rocker arm	Replace the rocker arm
OK			
Flywheel	NG	Loose flywheel bolts	Retighten the flywheel bolts
OK			
Crankshaft and thrust bearings	NG	Worn or damaged crankshaft and/or thrust bearings	Replace the crankshaft and/or the thrust bearings
OK			
Crankshaft and connecting rod bearings	NG	Worn or damaged crankshaft and/or connecting rod bearings	Replace the crankshaft and/or the connecting rod bearings
OK			
Connecting rod bushing and piston pin	NG	Worn or damaged connecting rod bushing and piston pin	Replace the connecting rod bushing and/or the piston pin
OK			
Piston and cylinder liner	NG	Worn or damaged piston and cylinder liner Foreign material in the cylinder	Replace the piston and the cylinder liner

Turbocharger

1) ENGINE HAS LESS THAN NORMAL POWER

Checkpoint		Trouble Cause	Countermeasure
Air cleaner	NG	Restricted	Clean or replace
OK			
Intake pipe and hose	NG	Restricted	Clean or replace
OK			
Compressor / intake manifold	NG	Loose (Leaking)	Repair
OK			
Exhaust manifold / turbine inlet	NG	Loose (Leaking)	Repair
OK			
Exhaust piping and silencers	NG	Restricted	Clean or replace
OK			
Air breather	NG	Restricted	Clean or replace
OK			
Boost compensator (Injection pump)	NG	Defective	Repair or replace

Continued on the next page

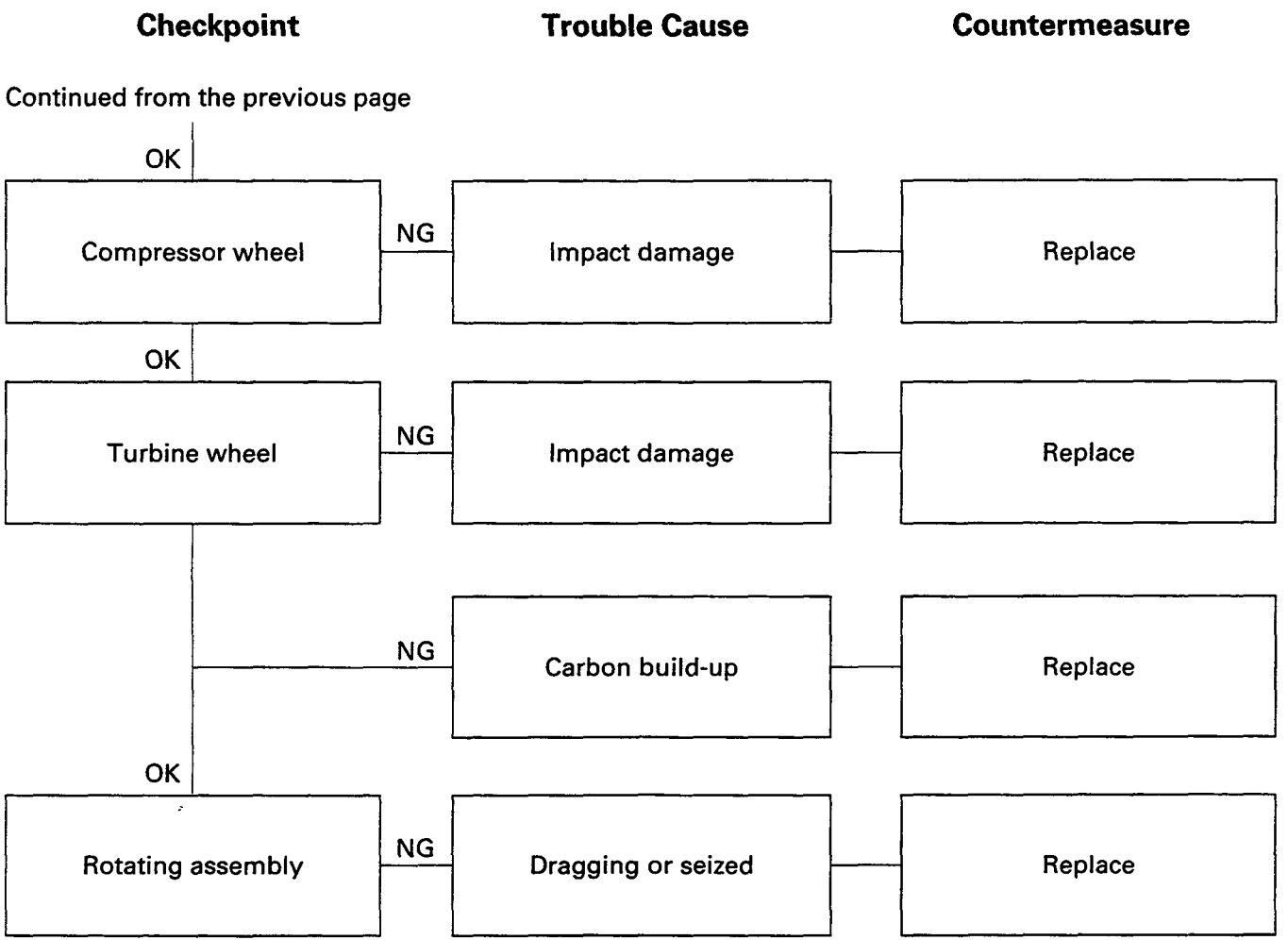
Checkpoint
Trouble Cause
Countermeasure
Continued from the previous page
OK
Compressor wheel
NG
Impact damage
Replace
OK
Turbine wheel
NG
Impact damage
Replace
NG
Carbon build-up
Replace
OK
Rotating assembly
NG
Dragging or seized
Replace

2) BLUE OR BLACK SMOKE

Checkpoint		Trouble Cause	Countermeasure
Air cleaner or intercooler	NG	Restricted	Clean, repair, or replace
OK			
Turbocharger oil seal	NG	Leakage	Replace
OK			
Turbocharger oil drain pipe	NG	Restricted	Repair or replace
OK			
PCV system	NG	Defective	Repair or replace
OK			
Crankcase	NG	Excessive pressure	Repair
OK			
Compressor wheel	NG	Impact damage	Replace
OK			
Turbine wheel	NG	Impact damage	Replace

Continued on the next page

Checkpoint		Trouble Cause		Countermeasure
Continued from the previous page				
OK				
Center housing oil drain passage	NG	Restricted	—	Clean or replace

3) EXCESSIVE OIL CONSUMPTION

Checkpoint		Trouble Cause	Countermeasure
P.C.V system	NG	Defective	Repair or replace
OK			
Crankcase	NG	Excessive pressure	Repair
OK			
Turbocharger oil seal	NG	Leakage	Replace
OK			
Turbocharger oil drain pipe	NG	Restricted	Clean or replace
OK			
Turbine wheel	NG	Impact damaged	Replace the turbine housing
OK			
Compressor wheel	NG	Impact damage	Replace the compressor housing and rotating assembly
OK			
Oil Pressure	NG	Excessive	Repair

Continued on the next page

Checkpoint		Trouble Cause		Countermeasure
Continued from the previous page				
OK				
Center housing oil drain passage	NG	Restricted	—	Clean or replace

4) EXCESSIVE TURBOCHARGER NOISE

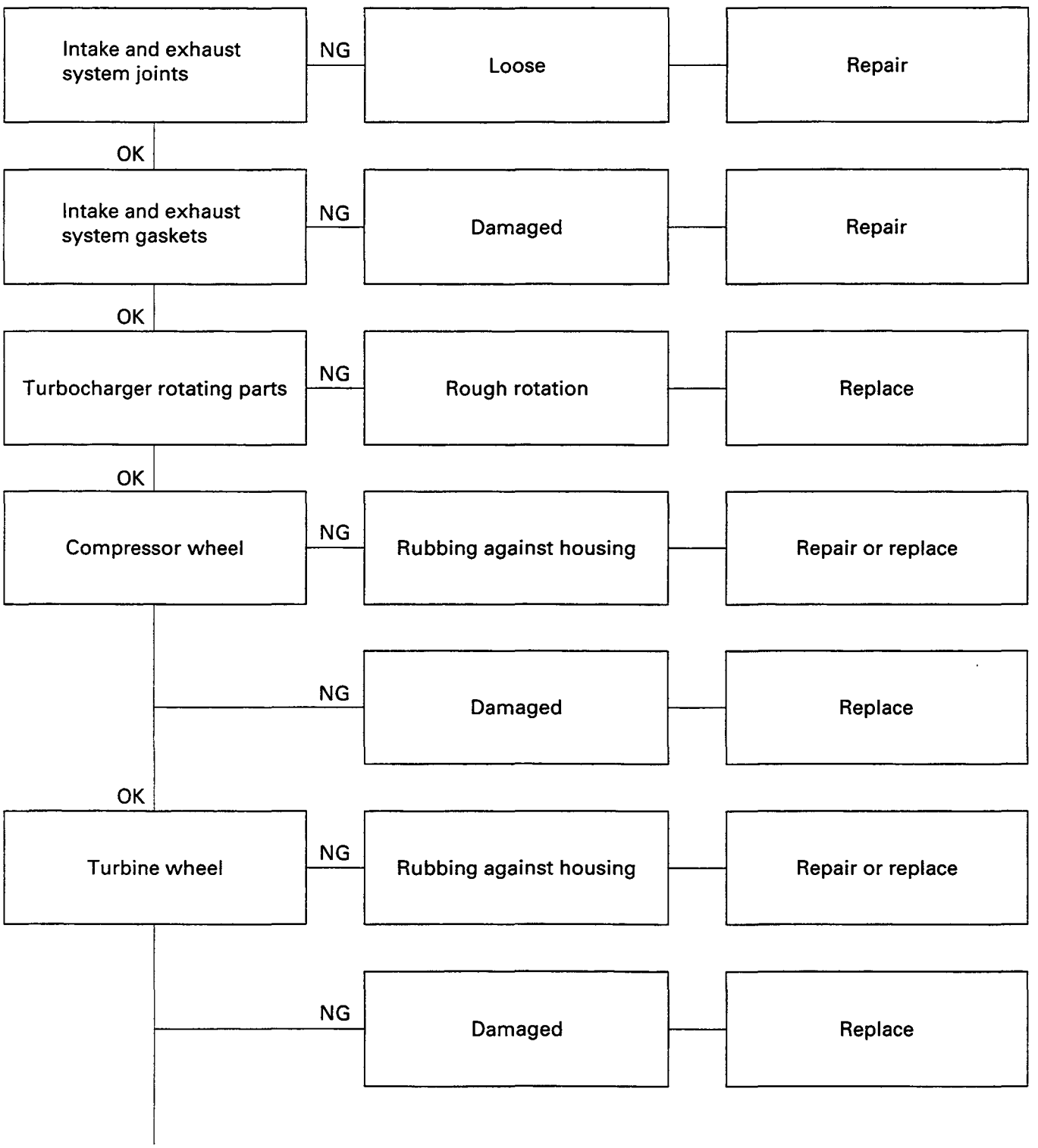

Continued on the next page

Continued from the previous page

Checkpoint		Trouble Cause	Countermeasure
	NG	Carbon deposits	Clean or replace
OK			
Oil Level	NG	Too low	Correct
	NG	Contaminated	Replace oil
OK			
Turbocharger oil feed pipe	NG	Restricted	Repair or replace
OK			
Turbine housing	NG	Carbon deposits	Clean
OK			
Compressor housing	NG	Dirty	Clean
OK			
Turbine shaft bearings	NG	Worn	Replace

5) EXCESSIVE ROTATING PART WEAR

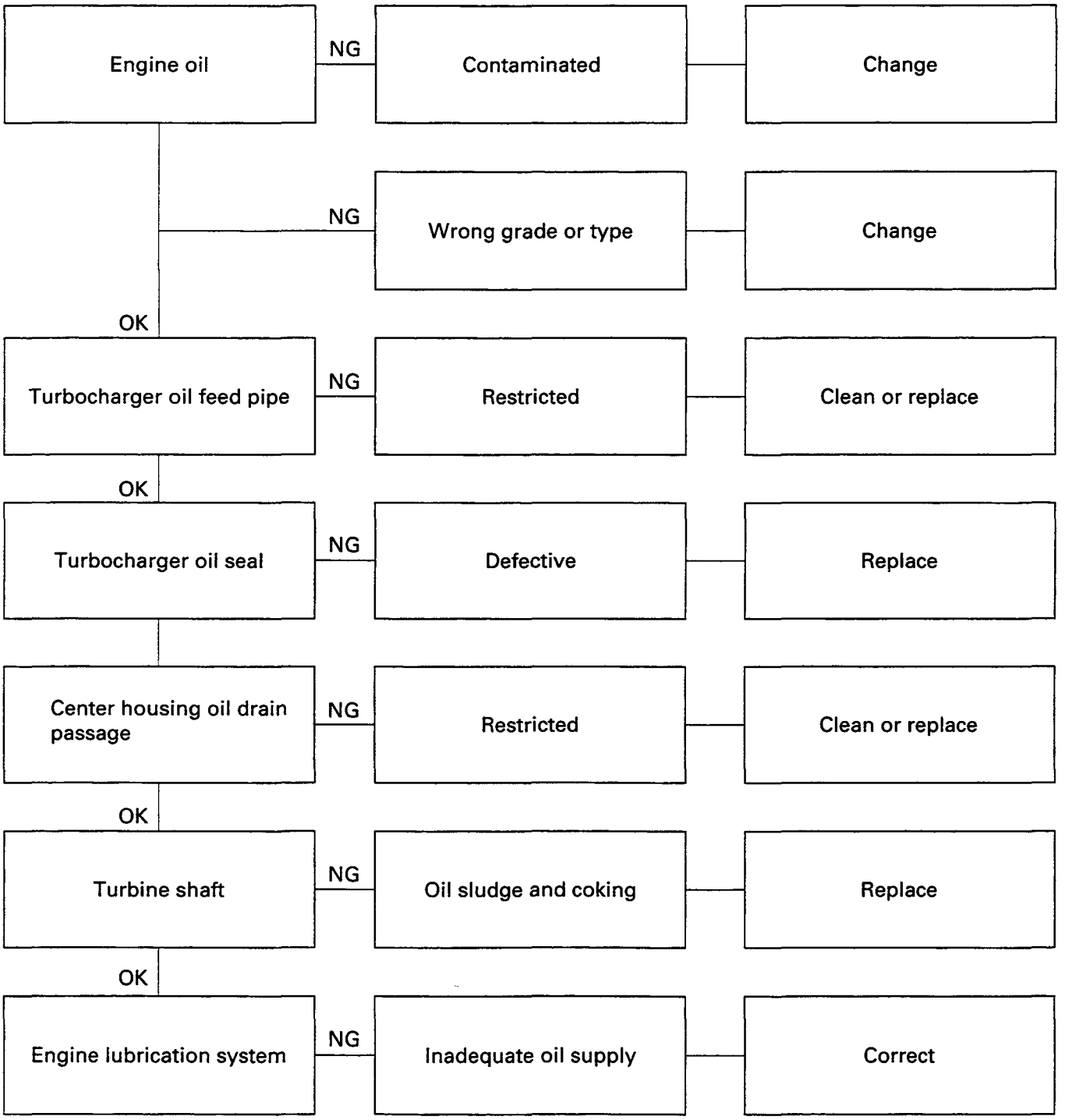

DELTA OPEL ISUZU SUZUKI

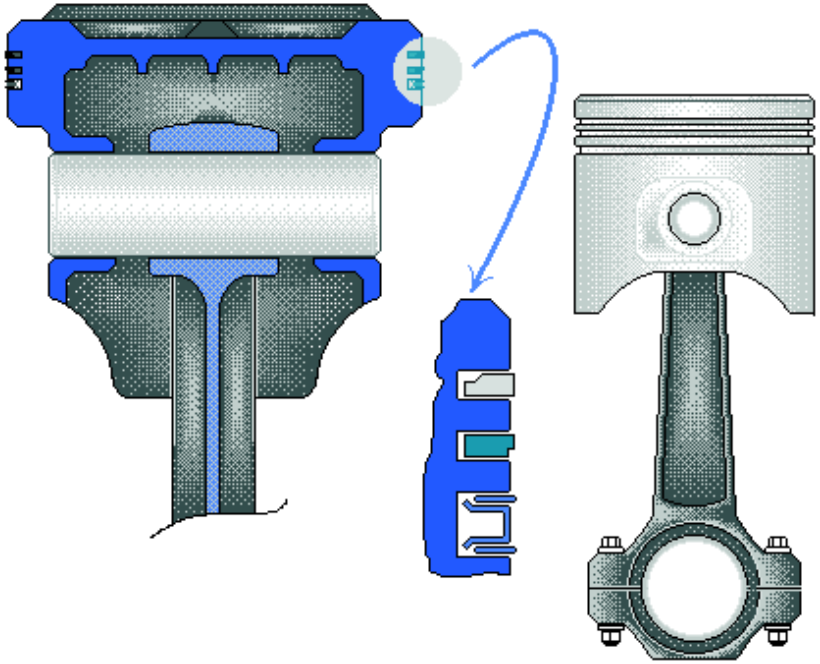

Index

Specs.

Servicing

Overhaul

Lubrication

KB TF 140
Diesel Engine

ISUZU

SECTION 6A

ENGINE MECHANICAL

TABLE OF CONTENTS

	PAGE
Main Data and Specifications	6A– 2
Torque Specifications	6A– 4
Standard Bolts	6A– 4
Special Parts Fixing Nuts and Bolts	6A– 5
Recommended Liquid Gasket	6A– 14
LOCTITE Application Procedure	6A– 15
Servicing	6A– 16
General Description	6A– 31
Removal and Installation	6A– 32
Engine Repair Kit	6A– 45
Engine Overhaul	6A– 46
Disassembly	6A– 46
Inspection and Repair	6A– 62
Reassembly	6A– 95
Lubricating System	6A–122
Main Data and Specifications	6A–122
General Description	6A–123
Oil Pump	6A–125
Oil Filter and Oil Cooler	6A–128

MAIN DATA AND SPECIFICATIONS

Item \ Engine model		4JA1	4JB1T
Engine type		Four-cycle, overhead valve, water cooled	
Combustion chamber type		Direct injection	
Cylinder liner type		Dry type, chrome plated, stainless steel tube	
Timing gear train system		Gear drive	
No. of cylinders –bore × stroke	mm(in)	4 – 93 × 92 (3.66 × 3.62)	4 – 93 × 102 (3.66 × 4.02)
No. of piston rings		Compression ring: 2 / Oil ring: 1	
Total piston displacement	$cm^3(in^3)$	2,499 (152.4)	2,771 (169.0)
Compression ratio (to 1)		18.5	18.1
Compression pressure	kg/cm^2(psi/kPa)	31 (441/3) – 200 rpm	
Engine weight	kg(lb)	Approximately 226 (498)	Approximately 250 (550)
Fuel injection order		1 – 3 – 4 – 2	
Fuel injection timing BTDC	deg	12	11
Specified fuel type		SAE No. 2 diesel fuel	
Idling speed	rpm	750	
Valve clearances (At cold): Intake	mm(in)	0.4 (0.016)	
Exhaust	mm(in)	0.4 (0.016)	
Intake valves Open at (BTDC)	deg	24.5	
Close at (ABDC)	deg	55.5	
Exhaust valves Open at (BBDC)	deg	54.0	
Close at (ATDC)	deg	26.0	
Fuel system			
Injection pump type		BOSCH distributor VE type	
Governor type		Mechanical (Variable speed)	Mechanical (Limit speed)
Injection nozzle type		Hole with 5 orifices	
Injection nozzle opening pressure (Design value)	kg/cm^2(psi/kPa)	185 (2,631/18,143)	
Single spring type			
Main fuel filter type		Cartridge paper element and water separator	
Lubricating system			
Lubricating method		Pressure circulation	
Specified engine oil (API grade)		CC or CD	CD
Oil pump type		Gear	
Oil filter type		Cartridge paper element	
Oil capacity (When engine dry)	lit(US/UK gal)	6.5 (1.7/1.43)	
Oil cooler type		Water cooled	

4JB1T : 4JB1 Engine with turbocharger.

Item \ Engine model		4JA1	4JB1T
Cooling system			
Water pump type		Centrifugal	
Thermostat type		Wax pellet with jiggle valve	
Air cleaner type		*Dry paper element*	
Battery type/voltage × No. of units		95D31R-12 × 1	
Alternator capacity	V-A (Kw)	12 – 40 (480)	12 – 50 (600)
Starter motor output	V-Kw	12 – 2.0	
Turbocharger model			*IHI RHF4H
Turbine type			Radial-inflow
Compressor type			Radial-outflow
Maximum permissible speed	rpm		172,000

*IHI : Ishikawajima-Harima Heavy Industries., Ltd.

TORQUE SPECIFICATION

STANDARD BOLTS

The torque values given in the following table should be applied whenever a particular torque is not specified.

kg·m(lb.ft/N·m)

Strength Class / Bolt Identification / Bolt Diameter× Pitch (mm)	4.8 (4T)	(7T)	8.8 Refined	8.8 Non-Refined	9.8 (9T)
Bolt Identification	4	7	8	8	9
Bolt Diameter× Pitch (mm)	No mark	—			
M 6 × 1.0	0.60±0.20 (4.33±1.44/5.88±1.96)	0.75±0.25 (5.43±1.80/7.35±2.45)			–
M 8 × 1.25	1.30±0.50 (9.40±3.62/12.74±4.90)	1.75±0.55 (12.66±4.00/17.15±5.39)			2.40±0.70 (17 36±5.06/23.52±6.86)
M10 × 1.25	2.80±0.70 (20.25±5.06/27.44±6.86)	3.75±0.95 (27.12±6.87/36.75±9.31)			5.10±1.30 (36.89±9.40/49.98±12.74)
M12 × 1.25	6.25±1.25 (45.21±9.04/61.25±12.25)	7.75±1.55 (56.06±11.21/75.95±15.19)			9.65±1.95 (69.80±14.10/94.57±19.11)
M14 × 1.5	9.75±1.95 (70.52±14.10/95.55±19.11)	11.85±2.35 (85.71±17.00/116.13±23.03)			14.50±2.90 (104.88±21.00/142.10±28.42)
M16 × 1.5	13.30±2.70 (96.20±19.53/130.34±26.46)	17.30±3.50 (125.13±25.32/169.54±34.30)			20.40±4.10 (147.55±29.66/199.92±40.18)
M18 × 1.5	19.20±3.80 (138.87±27.49/188.16±37.24)	24.90±5.00 (180.10±36.17/244.02±49.00)			29.30±5.90 (211.93±42.67/287.14±57.82)
M20 × 1.5	26.30±5.30 (190.23±38.33/257.74±51.94)	34.40±6.90 (248.82±49.41/337.12±67.62)			40.40±8.10 (292.21±58.59/395.92±79.38)
M22 × 1.5	33.90±8.30 (245.20±60.03/332.22±81.34)	46.25±9.25 (334.53±66.91/453.25±90.65)			54.10±10.80 (391.30±78.12/530.18±105.84)
M24 × 2.0	45.80±9.20 (331.27±66.54/448.84±90.16)	58.20±14.30 (420.96±103.43/570.36±140.14)			70.60±14.10 (510.65±101.99/691.88±138.18)
*M10 × 1.5	2.70±0.70 (19.53±5.06/26.46±6.86)	3.70±0.90 (26.76±6.50/36.26±8.82)			4.90±1.20 (35.44±8.68/48.02±11.76)
*M12 × 1.5	5.80±1.20 (41.95±8.68/56.84±11.76)	7.20±1.40 (52.08±10.13/70.56±13.72)			9.10±1.80 (65.82±13.02/89.18±17.64)
*M14 × 2.0	9.10±1.80 (65.82±13.02/89.18±17.64)	11.20±2.20 (81.01±15.91/109.76±21.56)			13.60±2.70 (98.37±19.53/133.28±26.46)
*M16 × 2.0	12.70±2.50 (91.86±18.08/124.46±24.50)	16.50±3.30 (119.34±23.87/161.70±32.34)			19.50±3.90 (141.04±28.21/191.10±38.22)

An asterisk (*) indicates that the bolts are used for female threaded parts that are made of soft materials such as casting. Those shown in parentheses in the strength class indicate the classification by the old standard.

FLARE NUTS

kg·m(lb.ft/N·m)

Pipe diameter mm(in)	Torque	Pipe diameter mm(in)	Torque
4.76 (0.187)	1.55±0.25 (11.2± 1.8/15.2±2.45)	10.00 (0.394)	5.50±0.5 (39.7±3.6/53.95±4.90)
6.35 (0.250)	2.70±0.30 (19.5±2.1/26.48±2.94)	12.00 (0.472)	9.00±1.0 (65.0±7.2/88.29±9.80)
8.00 (0.315)	4.50±0.50 (32.5±3.6/44.14±4.90)	15.00 (0.591)	10.75±1.25 (77.7±9.0/105.45±12.26)

SPECIAL PARTS FIXING NUTS AND BOLTS

Cylinder Head Cover, Cylinder Head, and Rocker Arm Shaft Bracket

kg·m(lb.ft/N·m)

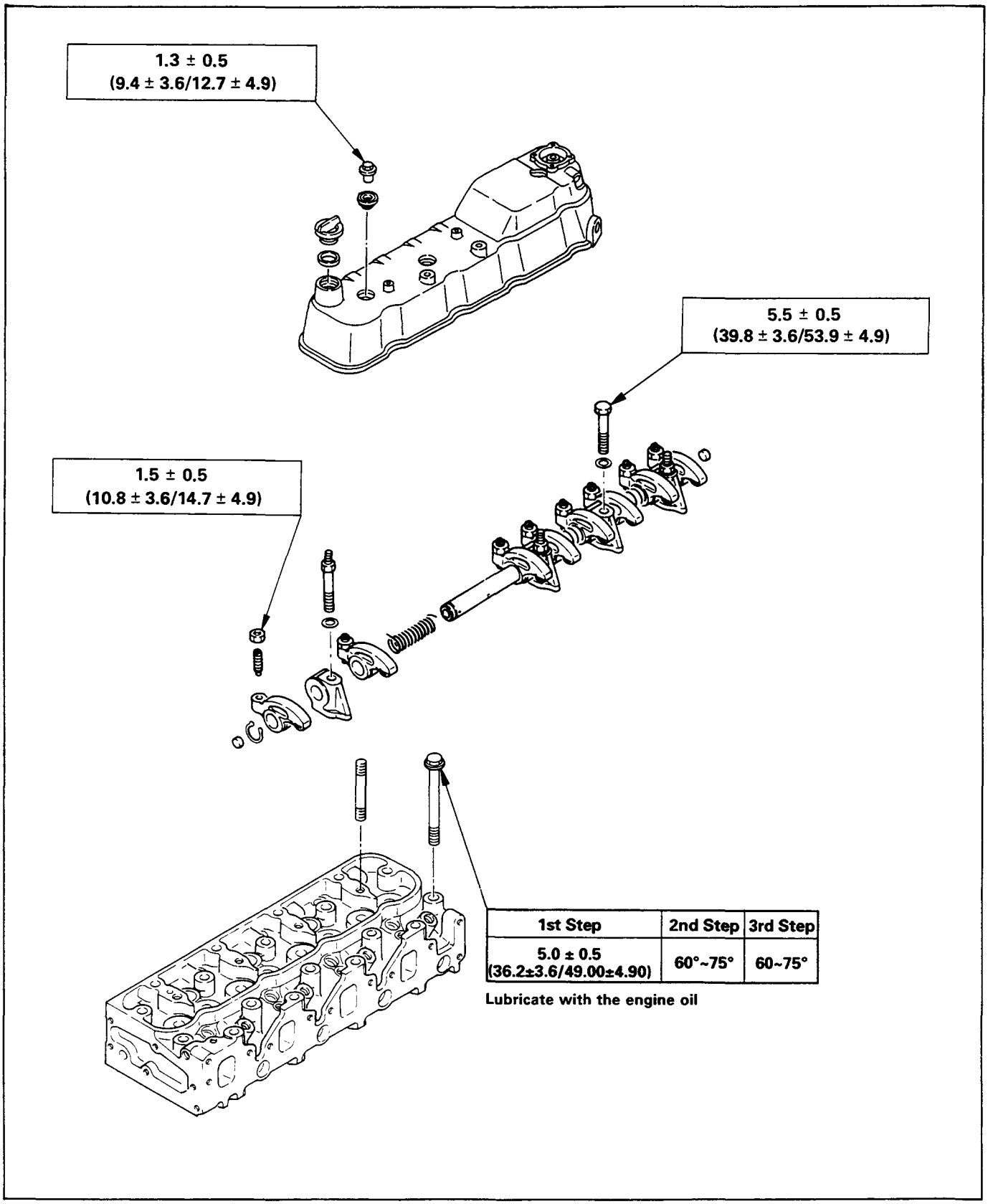

1st Step	2nd Step	3rd Step
5.0 ± 0.5 (36.2±3.6/49.00±4.90)	60°~75°	60~75°

Lubricate with the engine oil

Crankshaft Bearing Cap, Connecting Rod Bearing Cap, Crankshaft Damper Pulley, Flywheel, and Oil Pan

kg·m(lb.ft/N·m)

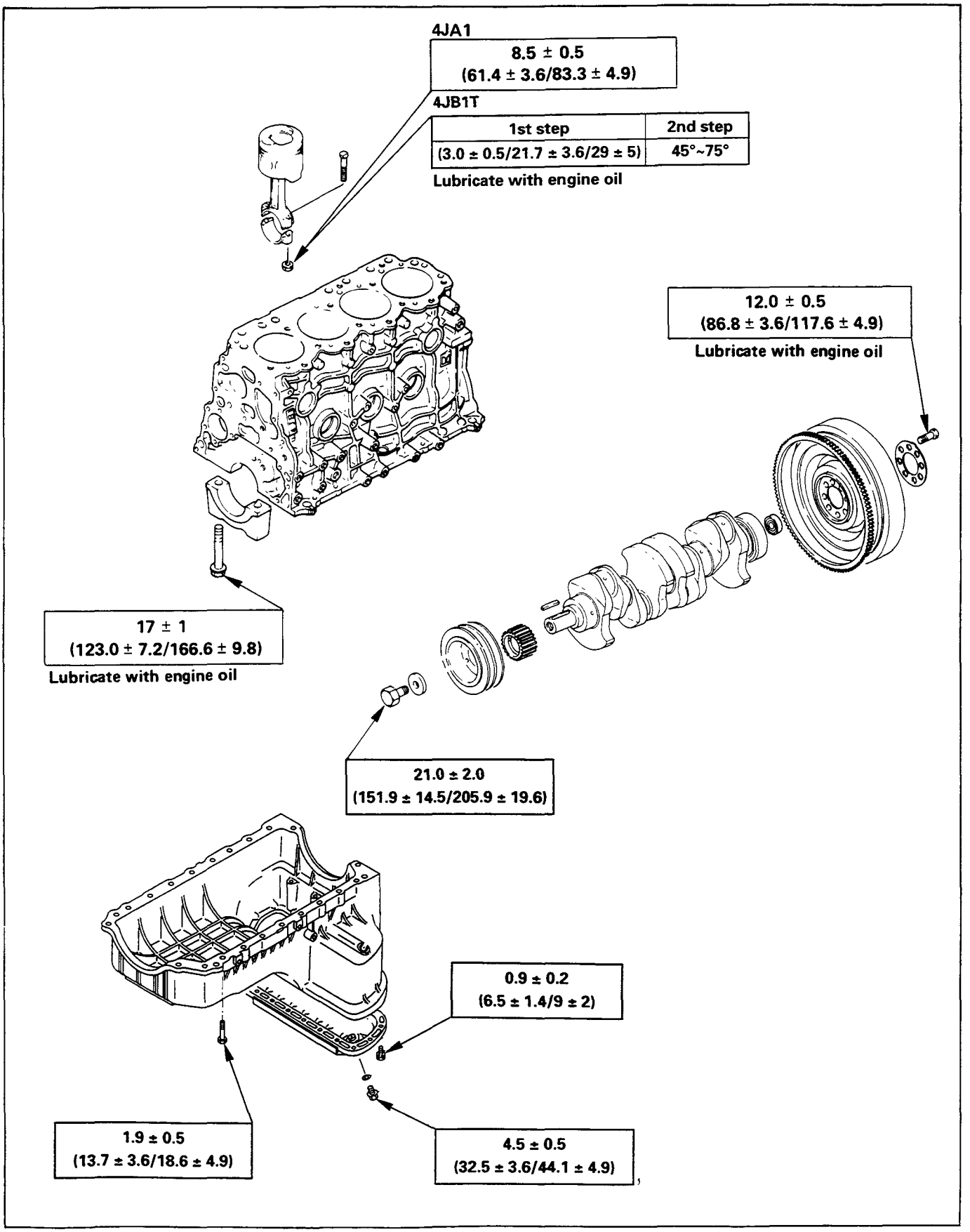

Timing Gear Case, Pulley Housing, Timing Gear, and Camshaft

kg·m(lb.ft/N·m)

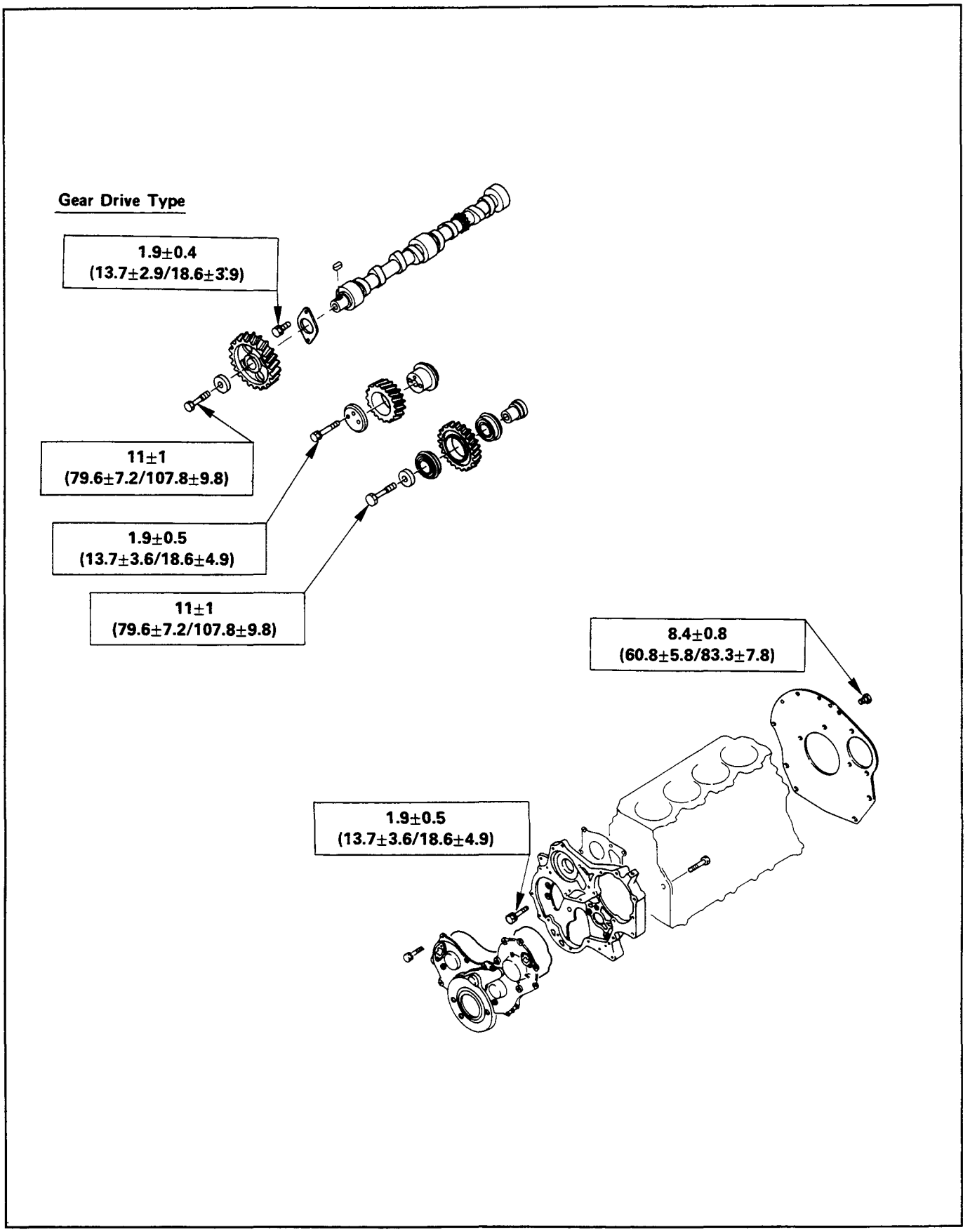

Cooling and Lubricating System

kg·m(lb.ft/N·m)

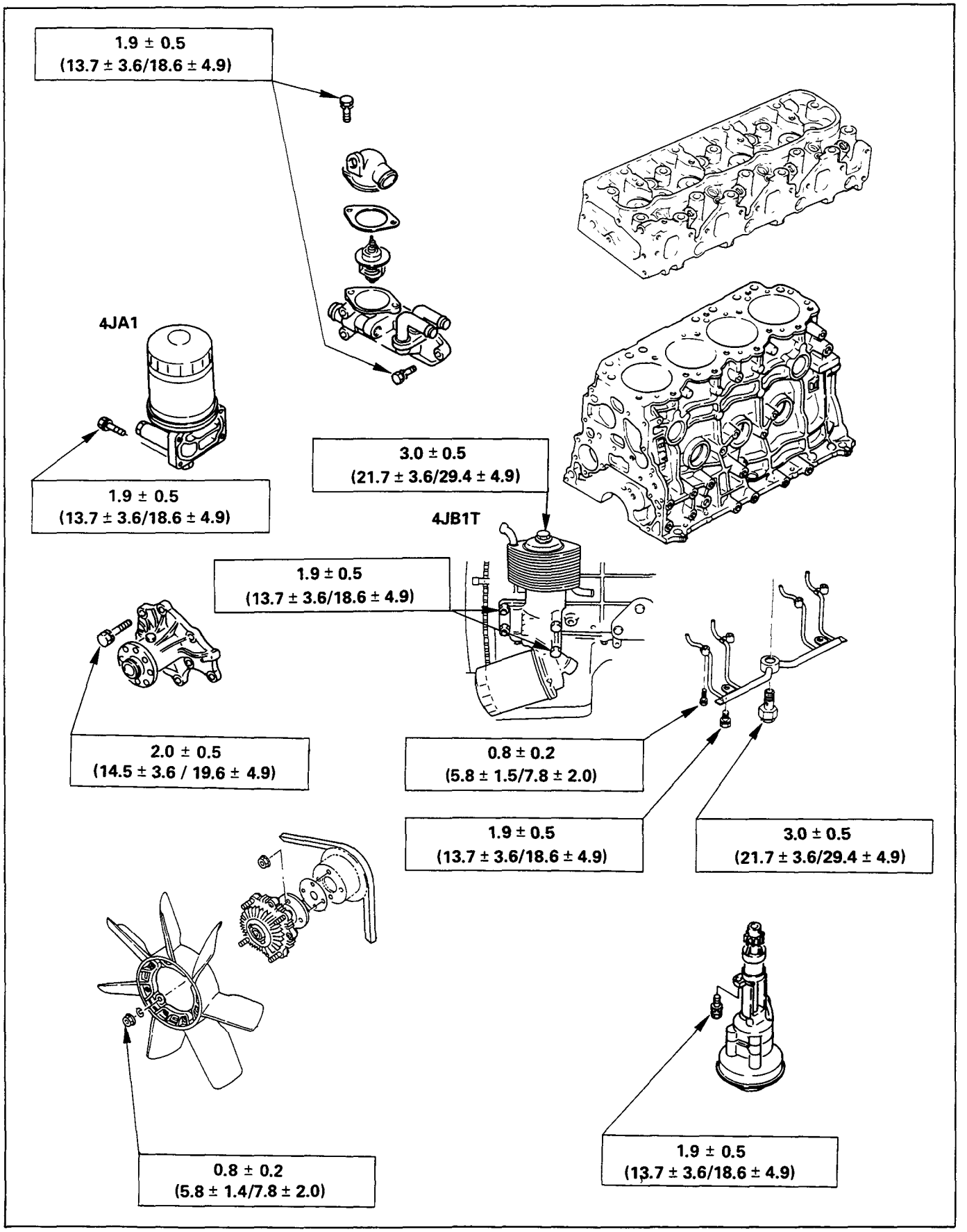

Intake and Exhaust Manifold

kg·m(lb.ft/N·m)

4JA1 ENGINE Model

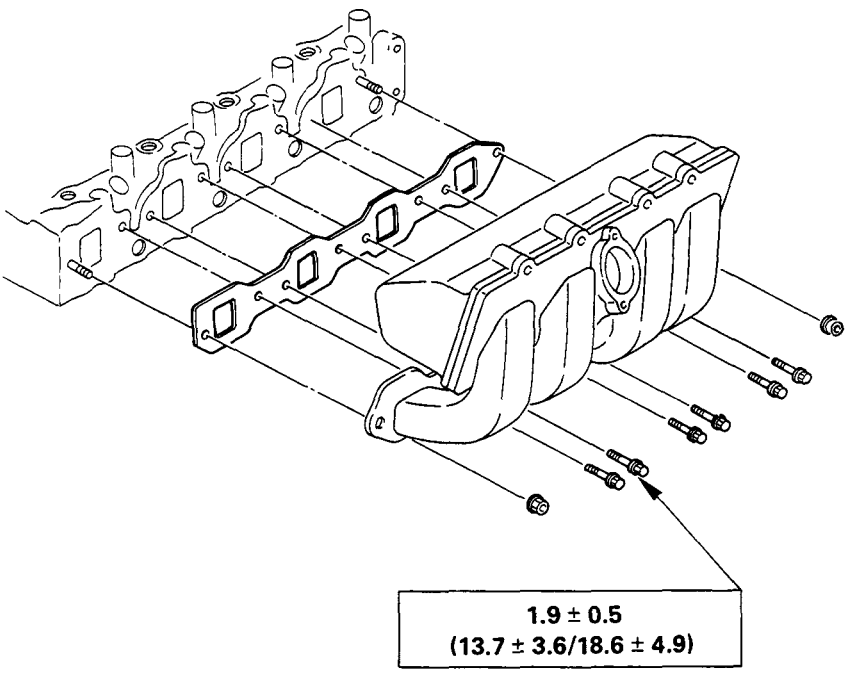

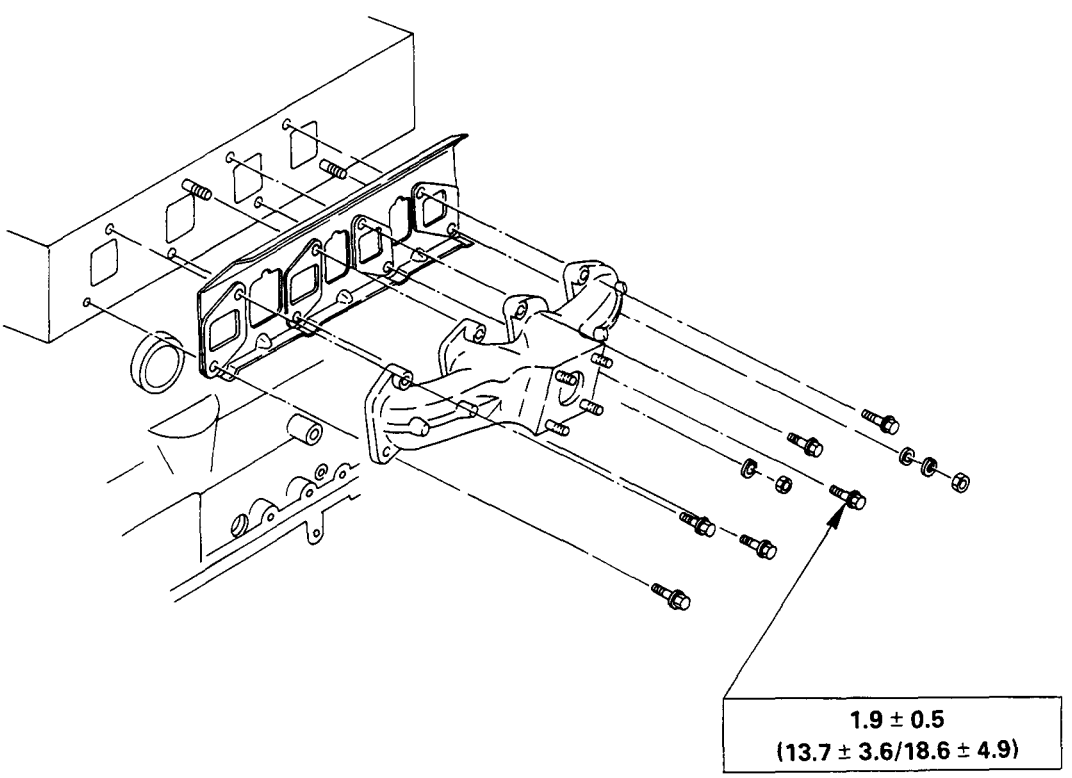

Intake Manifold, Exhaust Manifold, and Turbocharger

kg·m(lb.ft/N·m)

4JB1T ENGINE Model

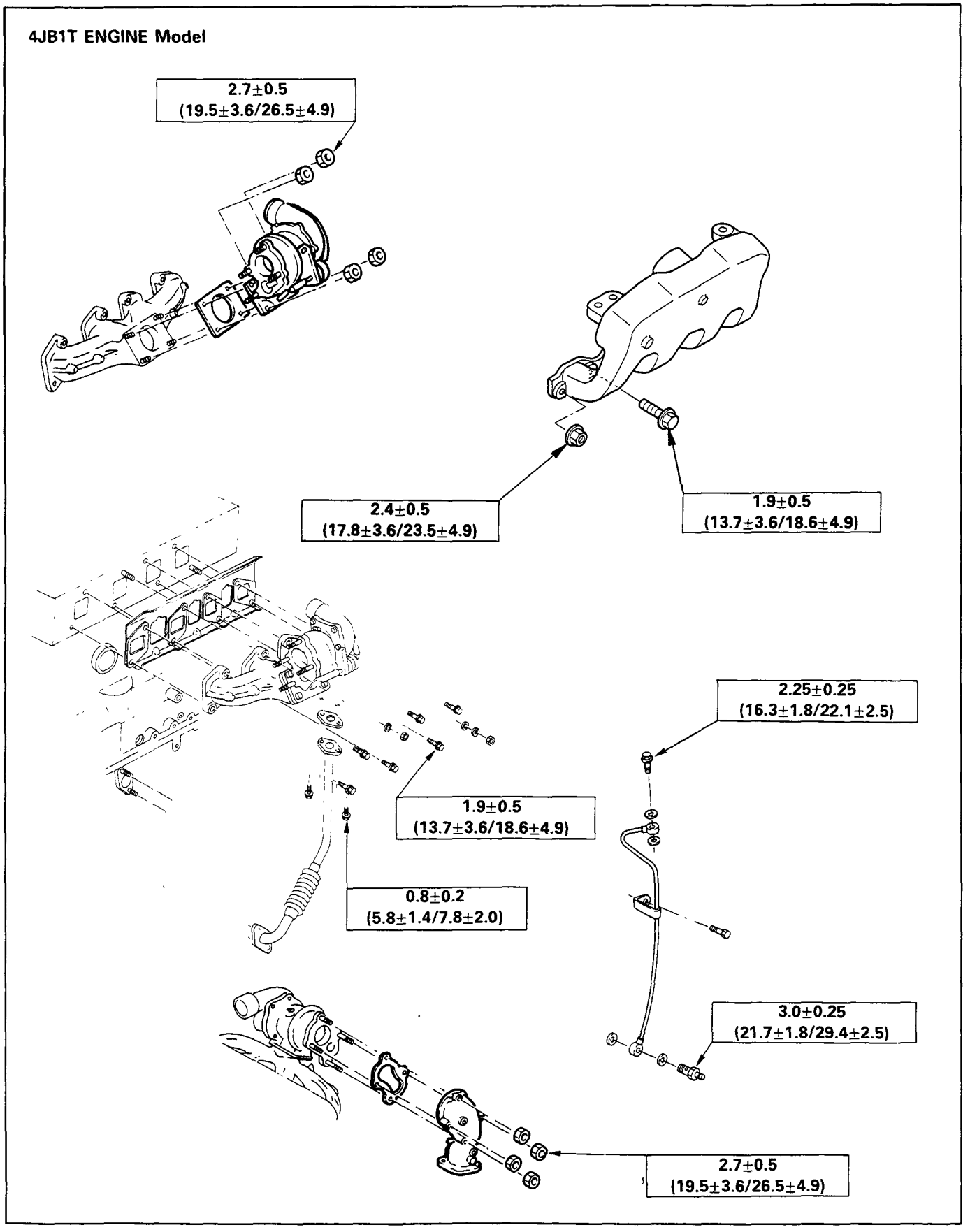

Engine Electricals

kg·m(lb.ft/N·m)

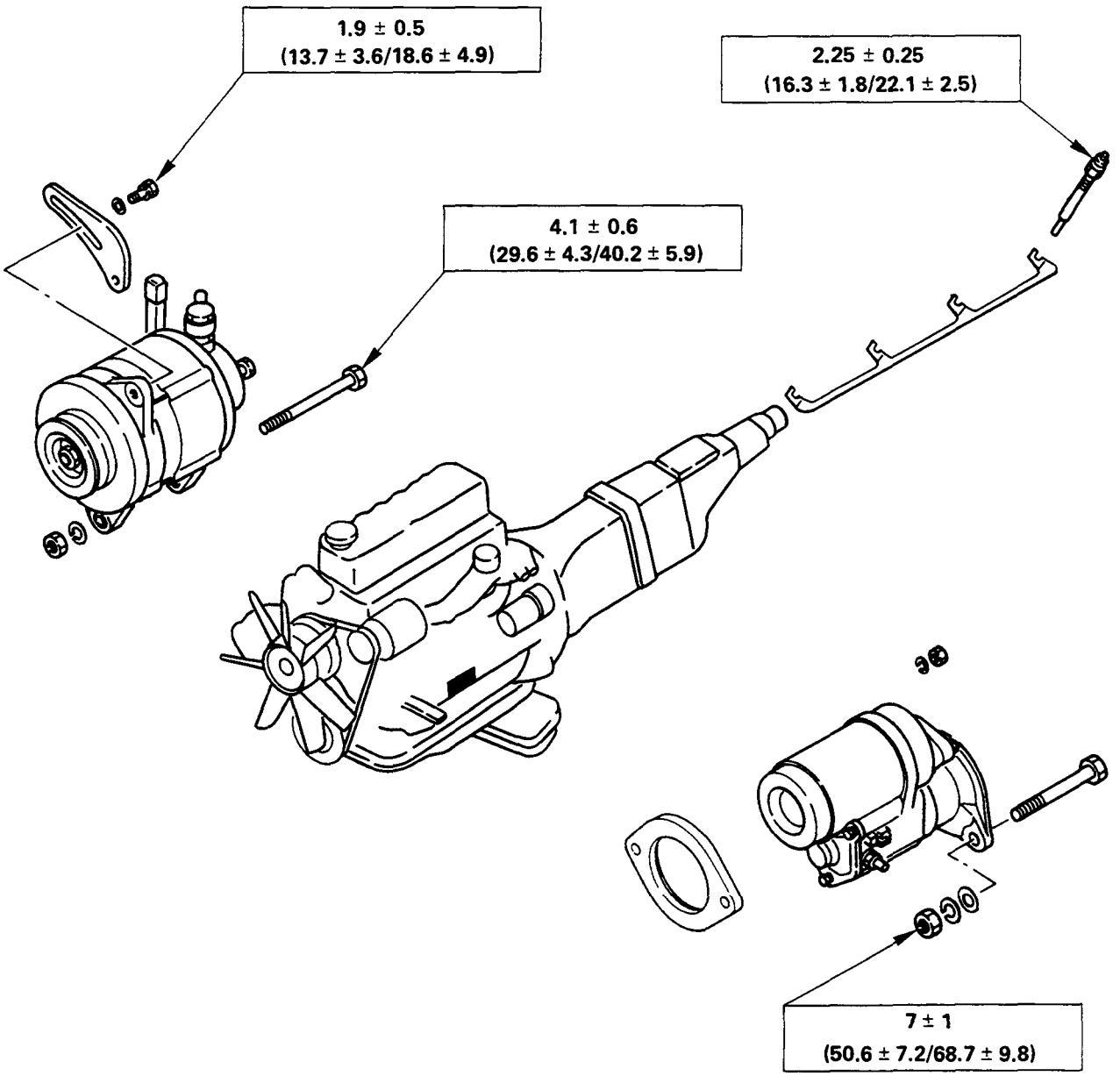

Fuel Injection System

kg·m(lb.ft/N·m)

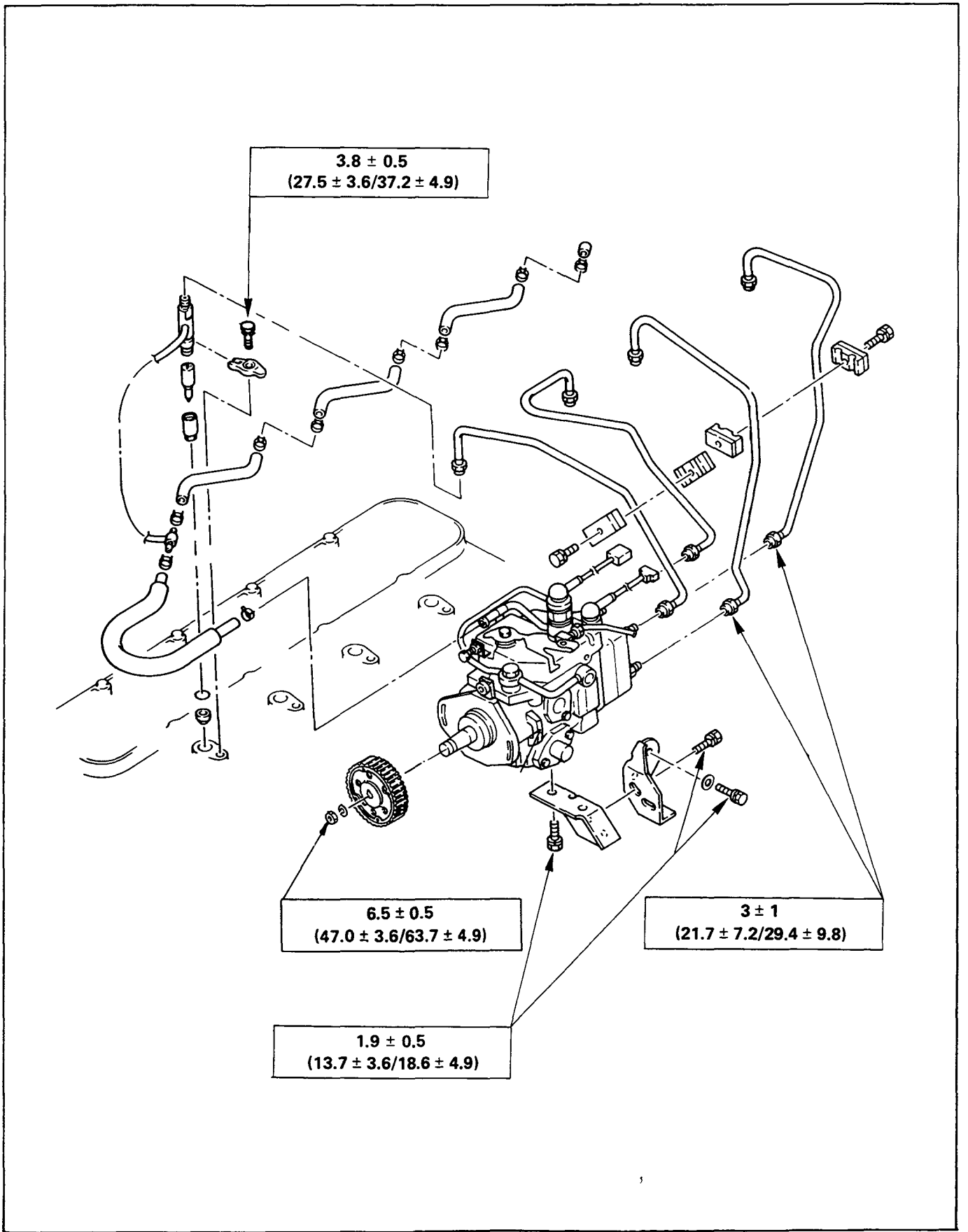

Engine Mounting Bracket

kg·m(lb.ft/N·m)

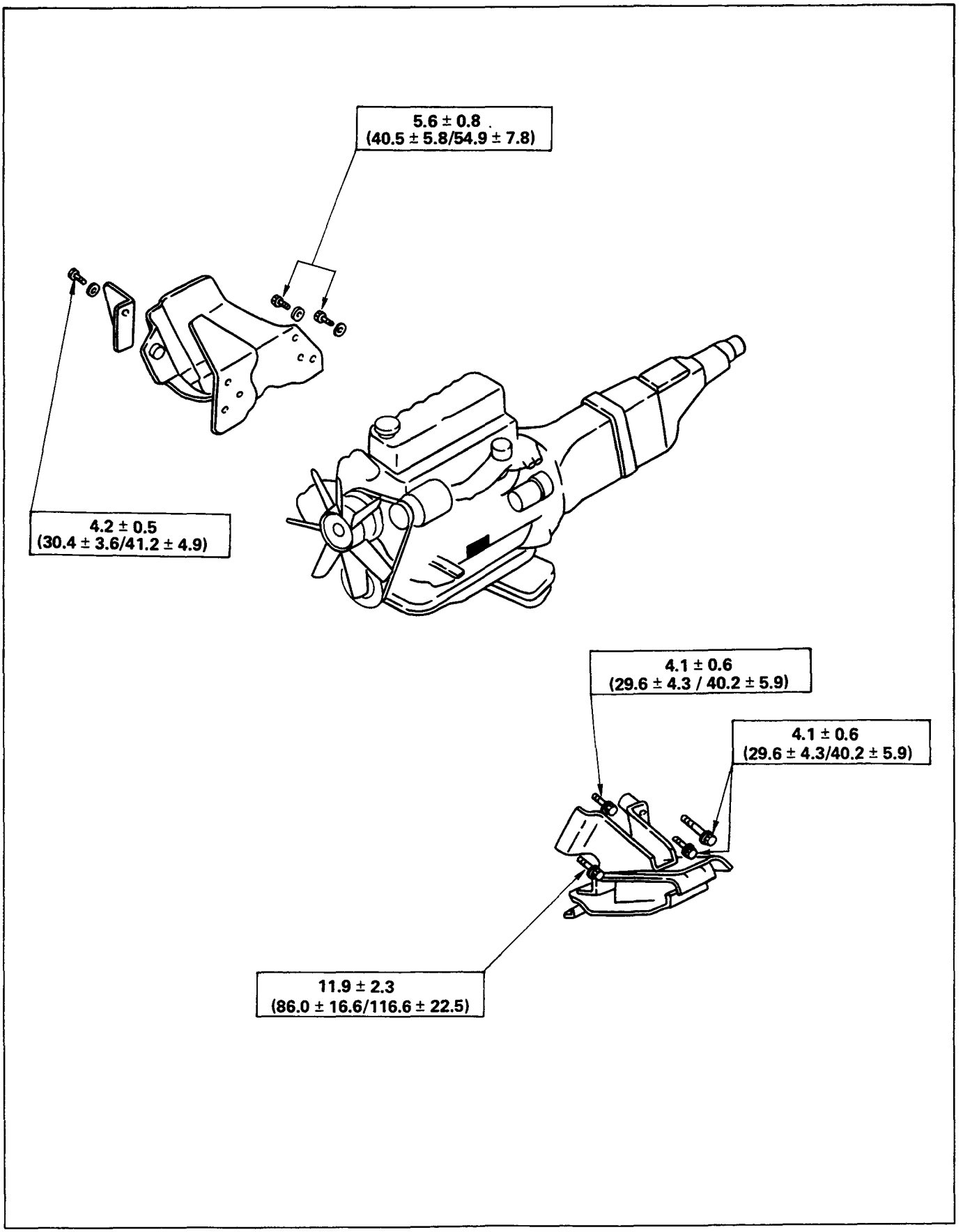

RECOMMENDED LIQUID GASKET

Type	Brand Name	Manufacturer	Remarks
RTV* Silicon Base	ThreeBond 1207B ThreeBond 1207C	Three Bond Three Bond	
Water Base	ThreeBond 1141E	Three Bond	
Solvent	ThreeBond 1104 BelcoBond 4 BelcoBond 401 BelcoBond 402	Three Bond Isuzu Isuzu Isuzu	
Anaerobic	LOCTITE 515 LOCTITE 518	Loctite Loctite	Recommended for transaxle repairs

* RTV : Room Temperature Vulcanizer

Note:

1. **It is very important that the liquid gaskets listed above or their exact equivalent be used on the vehicle.**
2. **Be careful to use the specified amount of liquid gasket.**
   Follow the manufacturer's instructions at all times.
3. **Be absolutely sure to remove all lubricants and moisture from the connecting surfaces before applying the liquid gasket.**
   The connecting surfaces must be perfectly dry.
4. **LOCTITE 515 and LOCTITE 518 harden upon contact with a metal surface.**

   Do not apply LOCTITE 515 or LOCTITE 518 between two metal surfaces having a clearance of greater than 0.25 mm (0.01 in). Poor adhesion will result.

LOCTITE APPLICATION PROCEDURE

LOCTITE Type	LOCTITE Color	Application Steps
LOCTITE 242	Blue	1. Completely remove all lubricant and moisture from the bolts and the female threaded surfaces of the parts to be joined. The surfaces must be perfectly dry. 2. Apply LOCTITE to the bolts. 3. Tighten the bolts to the specified torque. 4. Wait at least one hour before continuing the installation procedure.
LOCTITE 262	Red	
LOCTITE 270	Green	
LOCTITE 271	Red	
LOCTITE 515	Violet	1. Completely remove lubricant and moisture from the connecting surfaces. The surfaces must be perfectly dry. 2. Apply a 2.0 — 2.5 mm bead of LOCTITE to one of the connecting surfaces. There must be no gaps in the bead. 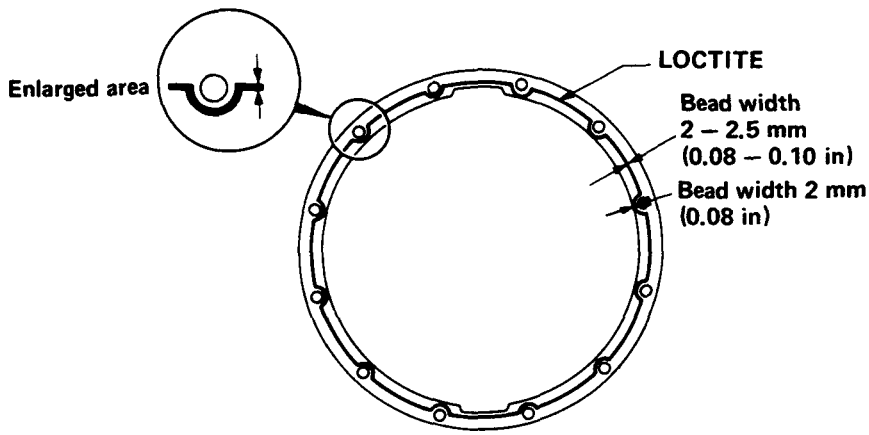 3. Tighten the bolts to the specified torque. 4. Let the joined parts set for at least thirty minutes.

SERVICING

Servicing refers to general maintenance procedures to be performed by qualified service personnel.

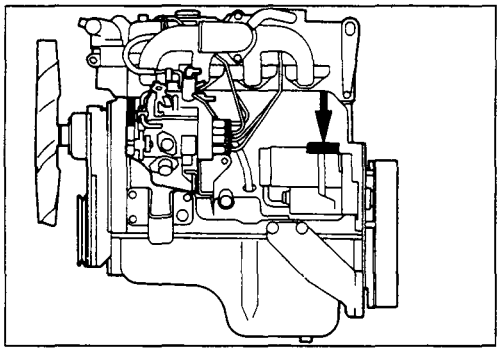

MODEL IDENTIFICATION

Engine Serial Number

The engine number is stamped on the front left hand side of the cylinder body.

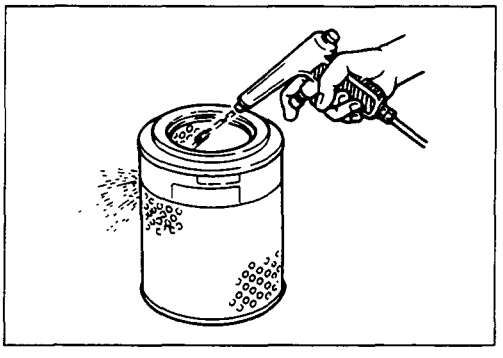

AIR CLEANER

Element cleaning procedures will vary according to the condition of the element.

Oil Wetted (Viscous) Type Paper Element

The air cleaner has an oil wetted paper element. No servicing is required until the replacement interval is reached. Never attempt to clean the element, no matter how dirty may appear. The element is designed to provide normal filtering efficiency until it becomes due for replacement. Refer to the Item "Service and Maintenance" in the Owner's and Driver's Manual for general service information.

Dust Fouled Element

Rotate the element with your hand while applying compressed air to the inside of the element. This will blow the dust free.

Compressed air pressure must not exceed 7 kg/cm^2 (99.6 psi/686 kPa).

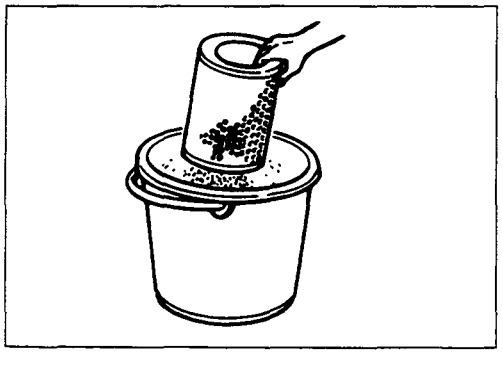

Carbon and Dust Fouled Element

1. Prepare a cleaning solution of Isuzu Genuine Element Cleaner (Donaldson D1400) diluted with water.
2. Submerge the element in the solution for twenty minutes.

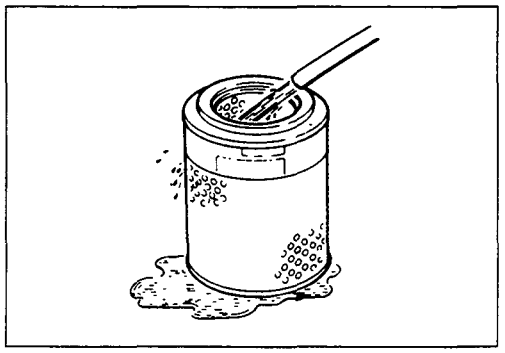

3. Remove the element from the solution and rinse it well with running water.

   Water pressure must not exceed 2.8 kg/cm^2 (39.8 psi/ 274 kPa).

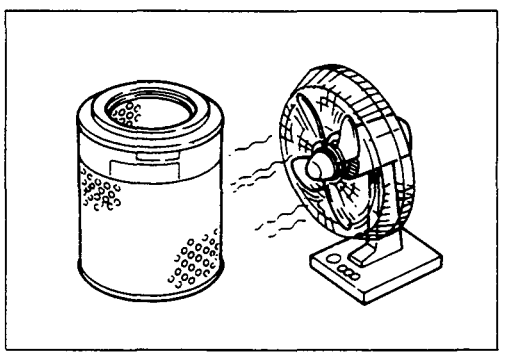

4. Dry the element in a well ventilated area.

   An electric fan will hasten drying.

Note:

Do not use compressed air or an open flame to dry the element quickly. Damage to the element will result.
It will usually take two or three days for the element to dry completely. Therefore, it is a good idea to have a spare on hand to use in the interim.

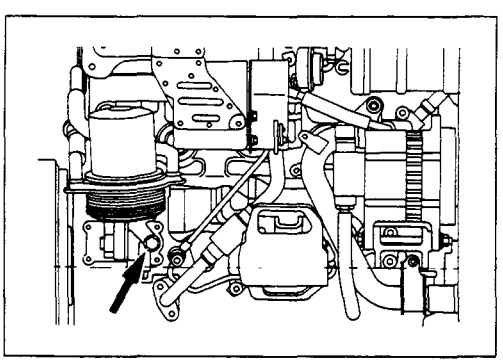

LUBRICATING SYSTEM

Main Oil Filter (Cartridge Type Paper Element)

Replacement Procedure

1. Loosen the drain plug to drain the engine oil.
2. Wait a few minutes and then retighten the drain plug.
3. Loosen the used oil filter by turning it counterclockwise with a filter wrench.

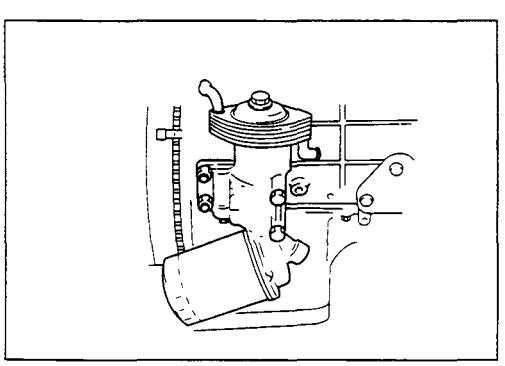

4. Clean the oil cooler fitting face. This will allow the new oil filter to seat properly.
5. Apply a light coat of engine oil to the O-ring.
6. Turn in the new oil filter until the filter O-ring is fitted against the sealing face.
7. Use the filter wrench to turn in the filter an additional 1 and 1/8 turns.

   Filter Wrench: 5-8840-0200-0

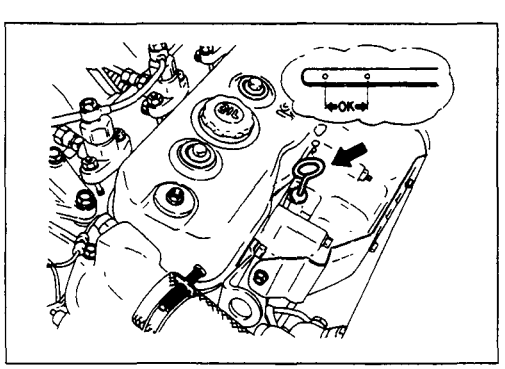

8. Check the engine oil level and replenish to the specified level if required.

Replenished Engine Oil	lit(US/UK gal)
Approx. 6.5 (1.7/1.4)	

9. Start the engine and check for oil leakage from the main oil filter.

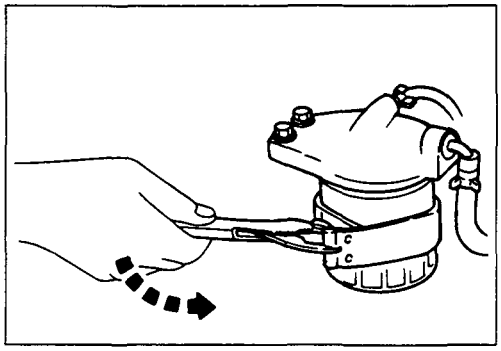

FUEL SYSTEM

Fuel Filter Replacement Procedure

1. Loosen the used fuel filter by turning it counterclockwise with the filter wrench.

   Filter Wrench : 5-8840-0253-0 (J-22700)

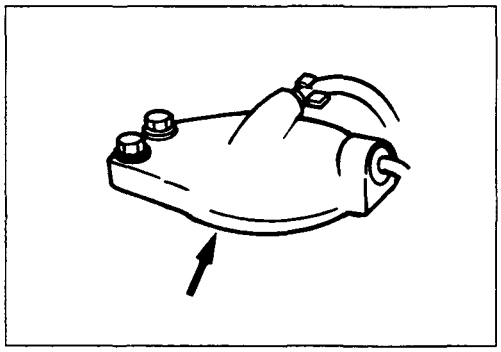

2. Clean the upper cover fitting face.

   This will allow the new fuel filter to seat properly.

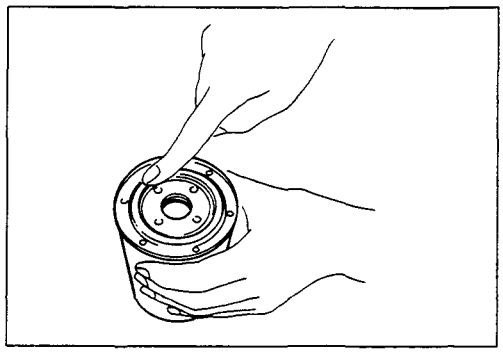

3. Apply a light coat of engine oil to the O-ring.
4. Supply fuel to the new fuel filter to facilitate bleeding.
5. Turn in the new fuel filter until the filter O-ring is fitted against the sealing face.

   Be very careful to avoid fuel spillage.
6. Use the filter wrench to turn in the fuel filter an additional 1/3 to 2/3 of a turn.

   Filter Wrench: 5-8840-0253-0 (J-22700)
7. Loosen the bleeder screw on the injection pump overflow valve.

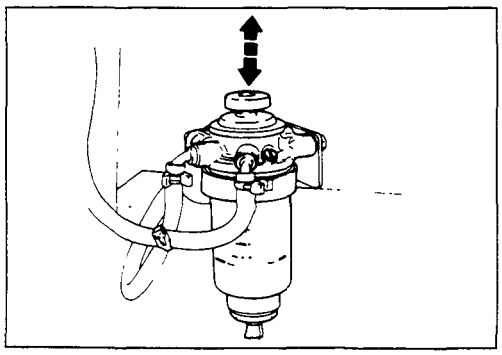

8. Operate the priming pump until fuel mixed with foam flows out of the bleeder screw.
9. Retighten the bleeder screw.
10. Operate the priming pump several times while checking for fuel leakage.

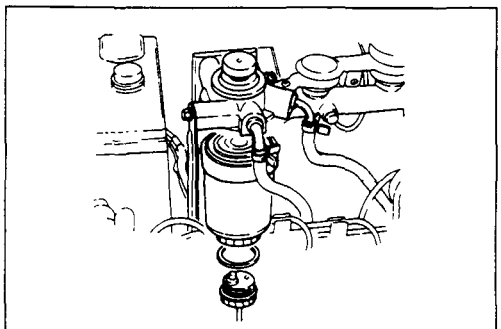

Water Separator Replacement Procedure

1. Remove the water separator by turning it counterclockwise with a filter wrench.

   Filter Wrench : 5-8840-0253-0 (J-22700)
2. Remove the level sensor from the separator body by turning it counterclockwise with a wrench.

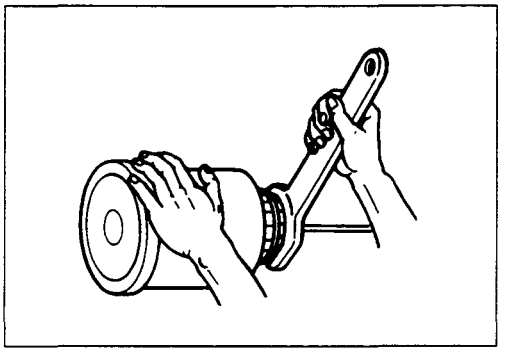

3. Install the level sensor to the water separator body with wrench.

Level Sensor Torque	kg·m(lb.ft/N·m)
1.3 (9.4/12.7)	

4. Clean the water separator cover fitting faces.
   This will allow the new fuel filter to seat properly.

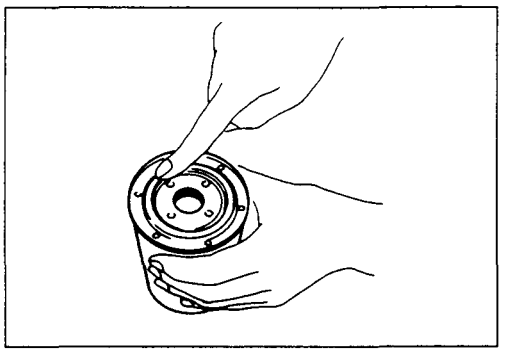

5. Apply a light coat of engine oil to the O-ring.
6. Turn in the fuel filter until the sealing face comes in contact with the O-ring.
7. Turn in the fuel filter an additional 2/3 of a turn with a filter wrench.
   Filter Wrench : 5-8840-0253-0 (J-22700)

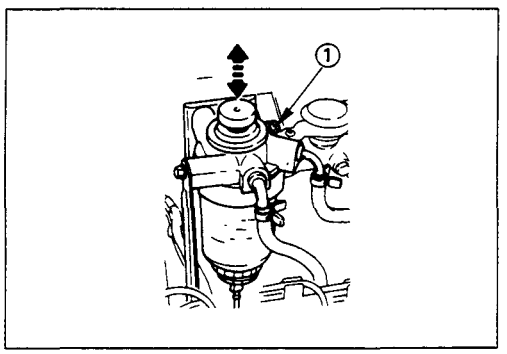

8. Loosen the bleeder plug ① on the priming pump body.
9. Operate the priming pump until fuel begins to flow from the fuel filter.
10. Retighten the bleeder plug ①.
11. Operate the priming pump several times and check for fuel leakage.

Note:

The use of an ISUZU genuine fuel filter is strongly recommended.

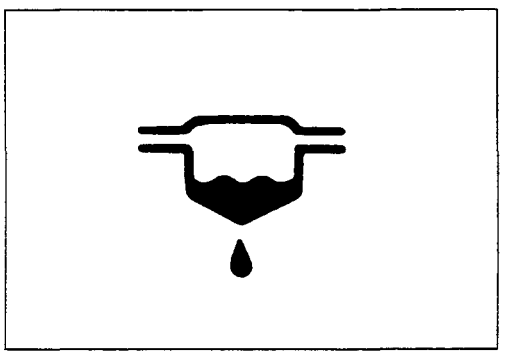

Draining Procedure

The indicator light will come on when the water level in the water separator exceeds the specified level.

Drain the water and foreign material from the water separator with the following procedure.

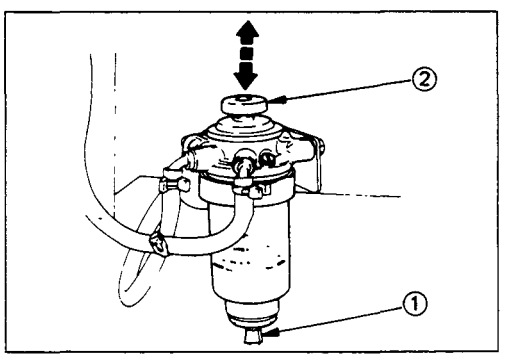

1. Place the end of the vinyl hose (beneath the drain plug) in a container.
2. Loosen the drain plug ①.
3. Operate the priming pump ② several times to drain the water.
4. After draining the water, tighten the drain plug ①.
5. Operate the priming pump several times and check for fuel leakage.
6. Check the water separator indicator light. It should be off.

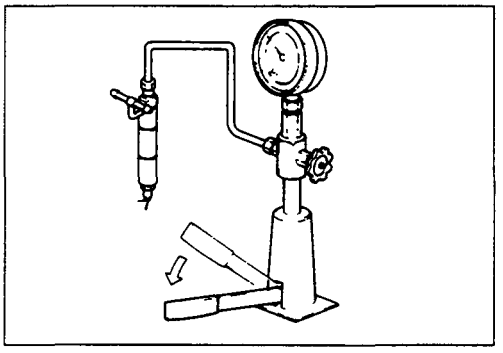

Injection Nozzle Inspection

Use a nozzle tester to check the injection nozzle opening pressure and the spray condition.

If the opening pressure is above or below the specified value, the injection nozzle must be replaced or adjusted.

Injection Nozzle Opening Pressure	kg/cm²(psi/kPa)
185 (2,631/18,143)	

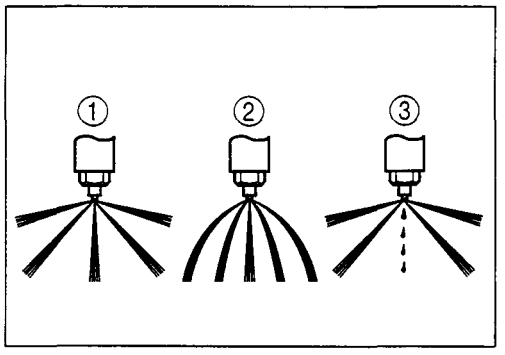

If the spray condition is bad, the injection nozzle must be replaced or repaired.

Spray Condition

① Correct

② Incorrect (Restrictions in orifice)

③ Incorrect (Dripping)

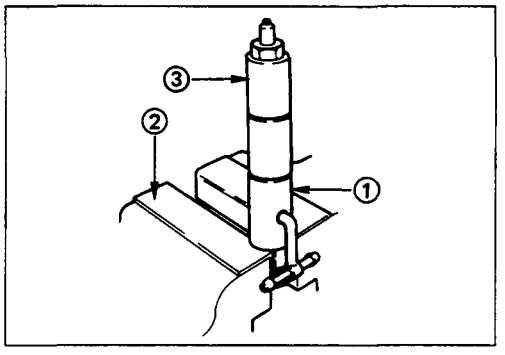

Injection Nozzle Adjustment

1. Clamp the injection nozzle holder ① in a vise ②.
2. Use a wrench to remove the injection nozzle retaining nut ③.

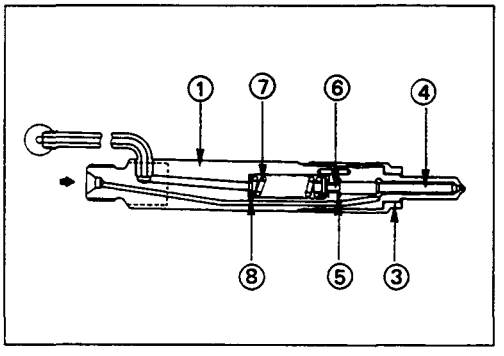

3. Remove the injection nozzle holder from the vise.
4. Remove the injection nozzle ④, the spacer ⑤, the spring seat ⑥, the spring ⑦ and the adjusting shim ⑧.
5. Install the new adjusting shim, the spring, the spring seat, the spacer, the injection nozzle, and the retaining nut.
6. Clamp the injection nozzle holder in the vise.
7. Tighten the injection nozzle holder retaining nut to the specified torque.

Injection Nozzle Holder Retaining Nut Torque	kg·m(ft.lbs/N·m)
3.5 ± 0.5 (25.3 ± 3.6/34.3 ± 4.9)	

03040401D

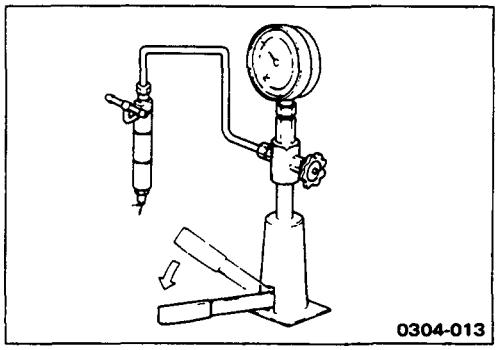

8. Remove the injection nozzle holder from the vise.
9. Attach the injection nozzle holder to the injection nozzle tester.
10. Apply pressure to the nozzle tester to check that the injection nozzle opens at the specified pressure.

    If the injection nozzle does not open at the specified pressure, install or remove the appropriate number of adjusting shims to adjust it.

03040401E

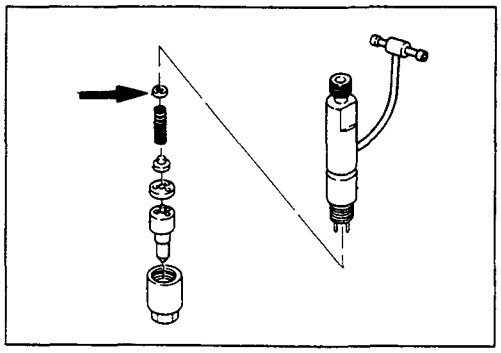

(Reference)

Removing or installing one shim will increase or decrease the nozzle opening pressure approximately 3.77 kg/cm^2 (53.6 psi/370 kPa).

Adjusting Shim Availability	mm(in)
Range	0.5 – 1.5 (0.02 – 0.06)
Increment	0.025 (0.001)
Total No. of Shims	41

Warning:

Test fluid from the injection nozzle tester will spray out under great pressure. It can easily puncture a person's skin. Keep your hands away from the injection nozzle holder tip at all times.

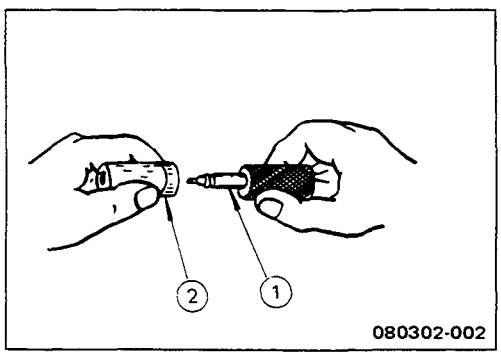

Nozzle Lapping Procedure

1. Lap the nozzle needle ① and the nozzle body ② by applying a compound of oxidized chrome and animal oil.

Note:

Do not apply an excessive amount of the oxidized chrome and animal oil compound to the injection needle valve seat area.

2. Carefully wash the needle valve and the nozzle body in clean diesel fuel after lapping.

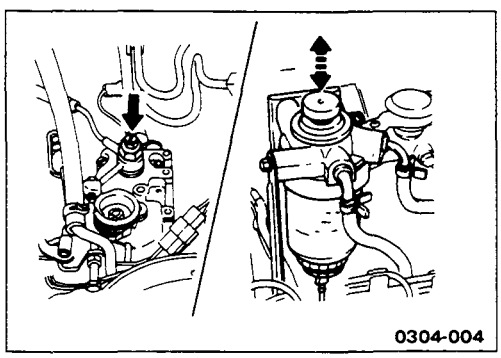

Air Bleeding

1. Loosen the bleeder screw on the injection pump overflow valve.
2. Operate the priming pump until fuel mixed with foam flows from the bleeder screw.
3. Tighten the bleeder screw.
4. Operate the priming pump several times and check for fuel leakage.

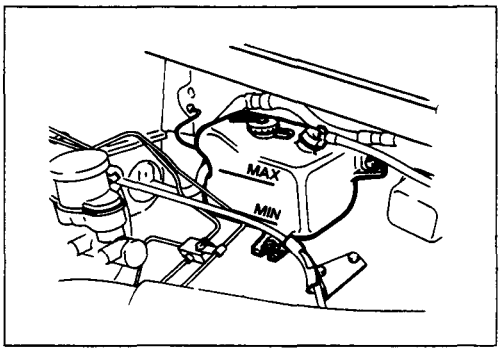

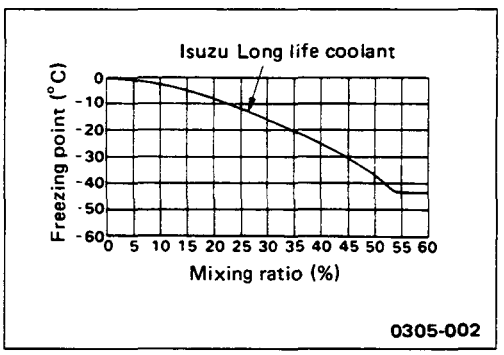

COOLING SYSTEM

Coolant Level

Check the coolant level and replenish the radiator reserve tank as necessary.

If the coolant level falls below the "MIN" line, carefully check the cooling system for leakage. Then add enough coolant to bring the level up to the "MAX" line.

Note:

Do not overfill the reserve tank.

Remove the radiator filler cap only when absolutely necessary.

Always check the coolant level when the engine is cold.

Always refer to the chart at the left to determine the correct cooling water to antifreeze solution mixing ratio.

030502

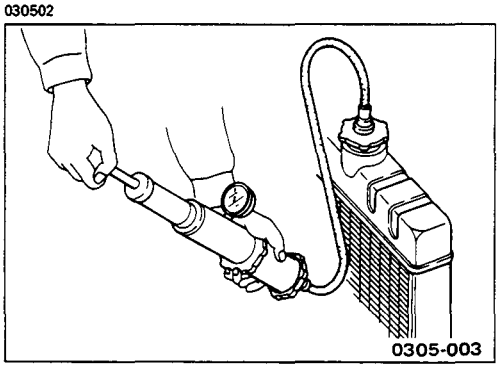

Cooling System Inspection

Install a radiator filler cap tester to the radiator. Apply testing pressure to the cooling system to check for leakage. The testing pressure must not exceed the specified pressure.

Testing Pressure	kg/cm² (psi/kPa)
2 (28.45/196)	

030503

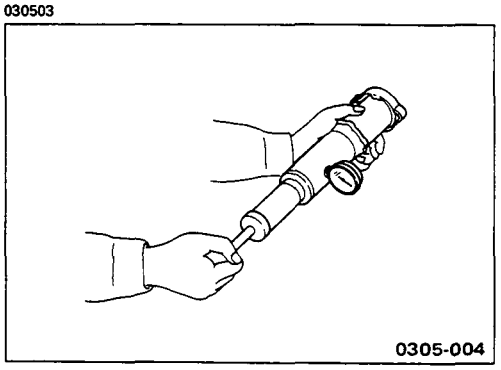

Radiator Cap Inspection

The radiator filler cap is designed to maintain coolant pressure in the cooling system at 1.05 kg/cm² (15 psi/103 kPa).

Check the radiator filler cap with a radiator filler cap tester. The radiator filler cap must be replaced if it fails to hold the specified pressure during the test procedure.

Radiator Filler Cap Pressure

Pressure Valve	kg/cm² (psi/kPa)
0.9 – 1.2 (12.8 – 17.1/88.2 – 117.6)	

Negative Valve (Reference)	kg/cm² (psi/kPa)
0.01 – 0.04 (0.14 – 0.57/0.98 – 3.92)	

07040101

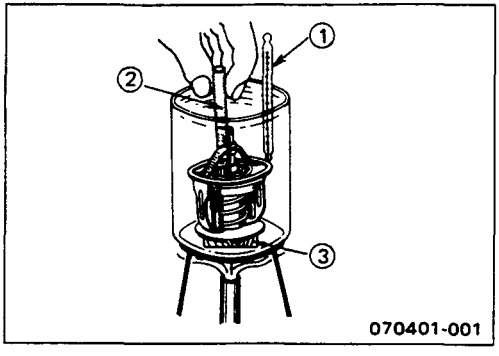

Thermostat Operating Test

1. Completely submerge the thermostat in water.
2. Heat the water.
   Stir the water constantly to avoid direct heat being applied to the thermostat.
3. Check the thermostat initial opening temperature.

Thermostat Initial Opening Temperature	°C(°F)
82 (180)	

4. Check the thermostat full opening temperature.

Thermostat Full Opening Temperature	°C(°F)
95 (203)	

Valve Lift at Fully Open position	mm(in)
9.5 (0.37)	

① Thermometer
② Agitating rod
③ Wooden piece

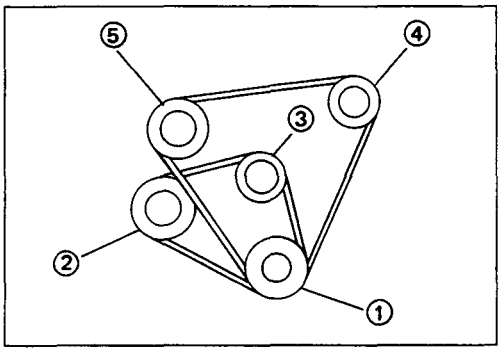

Drive Belt Adjustment

Depress the drive belt mid-portion with a 10 kg (22 lb/98 N) force.

Drive Belt Deflection	mm(in)
10 (0.39)	

Check the drive belt for cracking and other damage.

① Crankshaft damper pulley
② Alternator pulley
③ Cooling fan pulley
④ Oil pump pulley or idler pulley
⑤ Compressor pulley or idler pulley

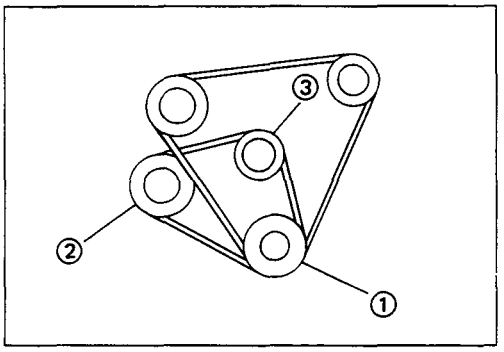

Cooling Fan Pulley Drive Belt

Fan belt tension is adjusted by moving the alternator.

Depress the drive belt mid-portion with a 10 kg (22 lb/98 N) force.

① Crankshaft damper pulley
② Alternator pulley
③ Cooling fan pulley

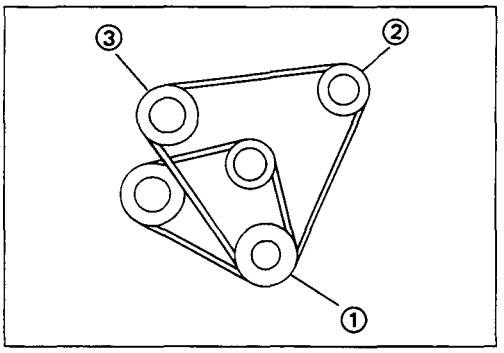

Compressor Pulley Drive Belt

Move the idler pulley as required to adjust the compressor drive belt tension.

If the vehicle is equipped with power steering, move the oil pump as required.

Depress the drive belt mid-portion with a 10 kg (22 lb/98 N) force.

Belt Deflection	mm(in)
12 — 15 (0.47 — 0.59)	

① Crankshaft damper pulley
② Oil pump pulley or idler pulley

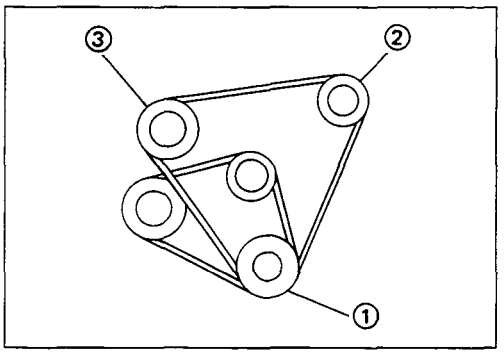

Power Steering Oil Pump Pulley Drive Belt

Move the oil pump as required to adjust the oil pump drive belt tension.

On air conditioner equipped models, both drive belts pulley must always be replaced as a set.

Depress the drive belt mid-portion with a 10 kg (22 lb/98 N) force.

Belt Deflection	mm(in)
14 — 17 (0.55 — 0.67)	

① Crankshaft damper pulley
② Oil pump pulley
③ Compressor pulley or idler pulley

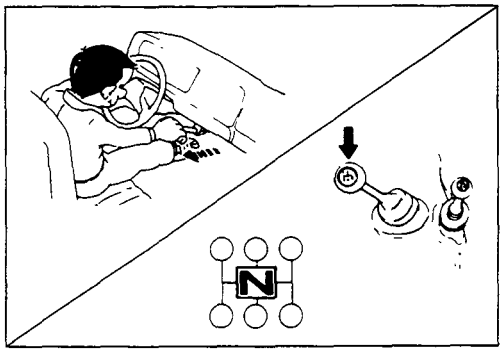

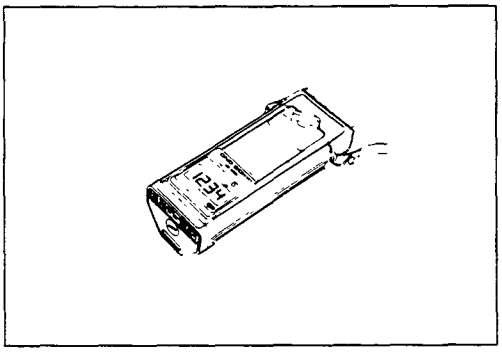

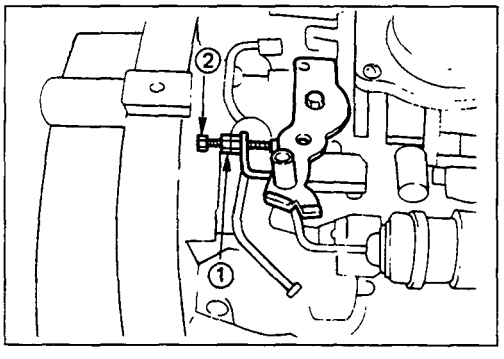

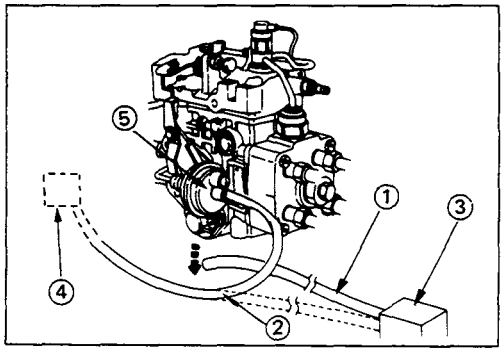

ENGINE CONTROL

Idling Speed Adjustment

1. Set the vehicle parking brake and chock the drive wheels.
2. Place the transmission in neutral.
3. Start the engine and allow it to idle until the coolant temperature reaches 70 — 80°C (158 — 176°F).
4. Disconnect the engine control cable from the control lever.
5. Set a tachometer to the engine.
6. Check the engine idling speed.

   If the engine idling speed is outside the specified range, it must be adjusted.

Engine Idling Speed	rpm
750 ± 50	

Idling Speed Adjustment

1. Loosen the idling set screw lock nut ① on the injection pump idling set bolt.
2. Adjust the idling speed to the specified range by turning the idling set bolt ②.
3. Lock the engine set bolt with the idling set screw lock nut.
4. Check that the idling control cable is tight (free of slack). If required, remove the slack from the cable.

Fast Idling Speed Inspection

1. Set tachometer to the engine.
2. Disconnect the vacuum hose ① from the fast idle actuator ⑤ on the injection pump.
3. Disconnect the other vacuum hose ② from the vacuum switching valve ③ and connect it to the fast idle actuator ⑤.

   The vacuum line will now be connected directly from the vacuum pump ④ to the fast idle actuator.
4. Check the engine fast idling speed.

   If the engine idling speed is outside the specified range, it must be adjusted.

Fast Idling Speed	rpm
850 – 950	

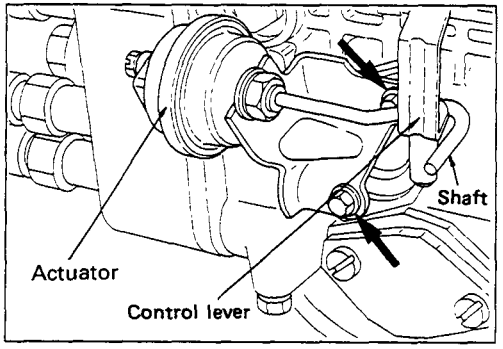

Fast Idling Speed Adjustment

1. Loosen the fast idle actuator bracket bolts.

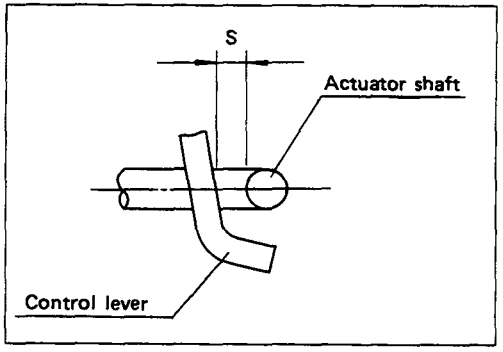

2. Adjust the fast idling speed by moving the actuator bracket, so that the clearance "S" can be 1 ~ 2 mm (0.04 ~ 0.08 in.).
3. Tighten the bracket bolts.

030605, 03060501A

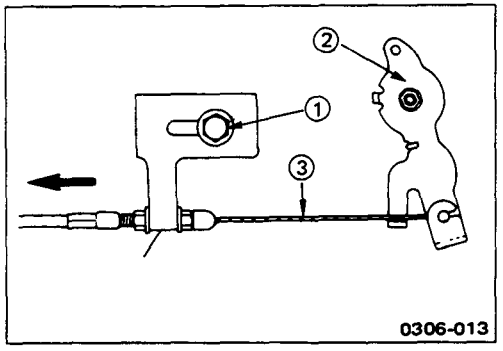

Accelerator Control

Accelerator Control Cable Adjustment

1. Loosen the accelerator cable clamp bolt ①.
2. Check that the idling control knob is in the engine idling position.
3. Hold the accelerator lever ② in the fully closed position and stretch the control cable ③ in the direction indicated by the arrow to remove any slack.

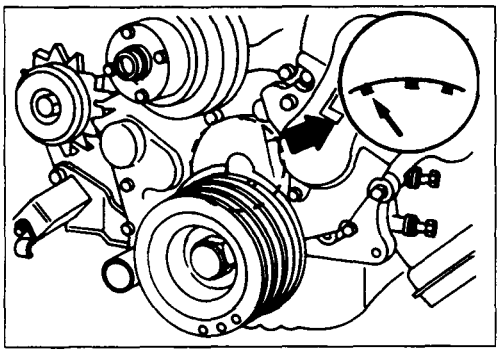

VALVE CLEARANCE ADJUSTMENT

1. Bring the piston in either the No. 1 cylinder or the No. 4 cylinder to TDC on the compression stroke by turning the crankshaft until the crankshaft damper pulley TDC line is aligned with the timing pointer.

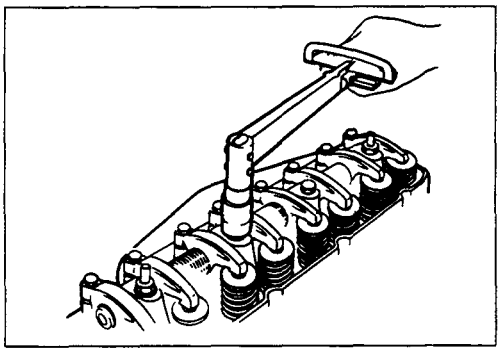

2. Check the rocker arm shaft bracket nuts for looseness.

   Tighten any loose rocker arm shaft bracket nuts before adjusting the valve clearance.

Rocker Arm Shaft Bracket Nut Torque	kg·m(lb.ft/N·m)
5.5 ± 0.5 (39.8 ± 3.6/53.9 ± 4.9)	

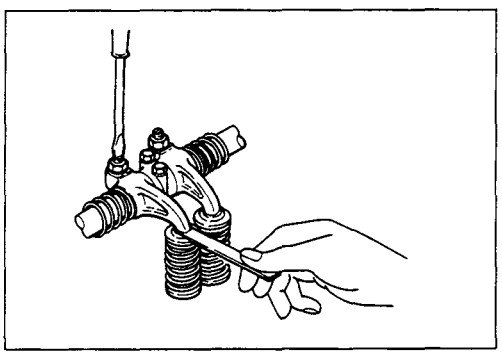

3. Check for play in the No. 1 intake and exhaust valve push rods.

   If the No. 1 cylinder intake and exhaust valve push rods have play, the No. 1 piston is at TDC on the compression stroke.

   If the No. 1 cylinder intake and exhaust valve push rods are depressed, the No. 4 piston is at TDC on the compression stroke.

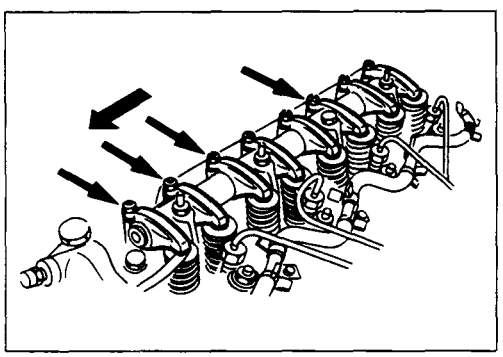

Adjust the No. 1 or the No. 4 cylinder valve clearances while their respective cylinders are at TDC on the compression stroke.

Valve Clearance (At Cold)	mm(in)
0.4 (0.016)	

4. Loosen each valve clearance adjusting screw as shown in the illustration.
5. Insert a feeler gauge of the appropriate thickness between the rocker arm and the valve stem end.

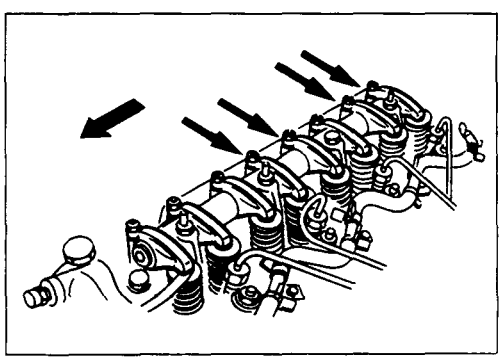

6. Turn the valve clearance adjusting screw until a slight drag can be felt on the feeler gauge.
7. Tighten the lock nut securely.
8. Rotate the crankshaft 360°.
9. Realign the crankshaft damper pulley TDC notched line with the timing pointer.
10. Adjust the clearances for the remaining valves as shown in the illustration.

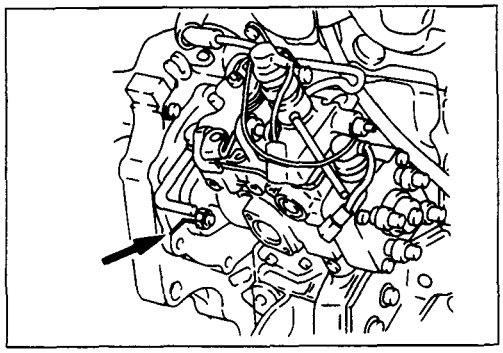

INJECTION TIMING ADJUSTMENT

1. Check that the notched line on the injection pump flange is aligned with the front plate or the timing gear case notched line.

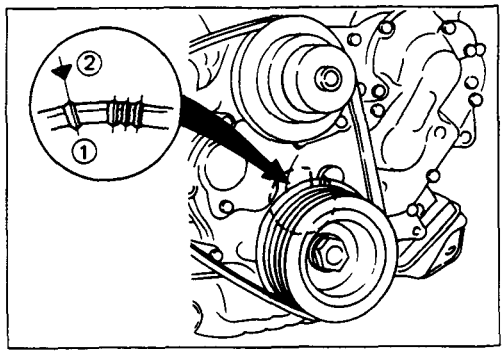

2. Bring the piston in the No. 1 cylinder to TDC ① on the compression stroke by turning the crankshaft until the crankshaft pulley TDC line is aligned with the timing mark ②.

Note:

Check for play in the No. 1 intake and exhaust valve push rods.
If the No. 1 cylinder intake and exhaust valve push rods have play, the No. 1 piston is at TDC on the compression stroke.

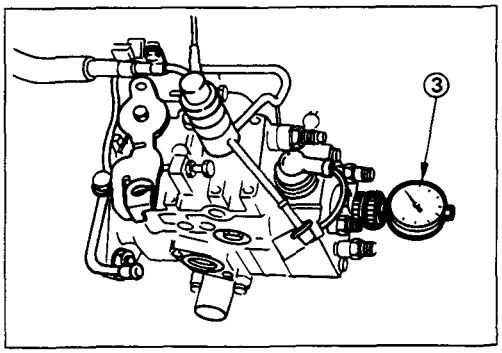

3. Disconnect the injection pipe from the injection pump.
4. Remove one bolt from the distributor head.
5. Insert a screwdriver into a hole in the fast idle lever and turn the lever to release the W-C.S.D. function. (If so equipped)
6. Install the static timing gauge ③.

   The probe of the gauge should be depressed inward approximately 2 mm (0.079 in).

   Static Timing Gauge : 5-8840-0145-0 (J-28827)

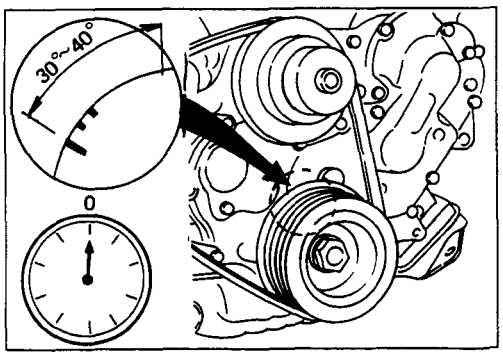

7. Rotate the crankshaft to bring the piston in the No. 1 cylinder to a point 30 – 40° BTDC.
8. Set the timing gauge needle to zero.
9. Move the crankshaft pulley slightly in both directions to check that the gauge indication is stable.

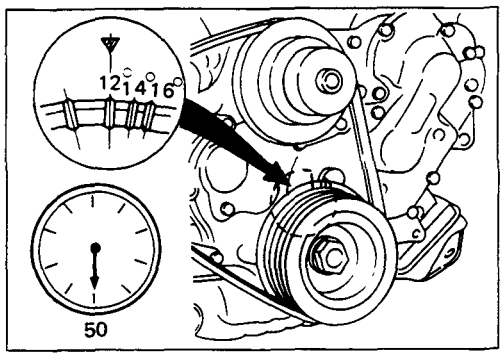

10. Turn the crankshaft clockwise and read the gauge indication when the crankshaft pulley timing mark (12° (4JA1) 11° (4JB1T) on pulley) is aligned with the pointer.

Standard Reading	mm(in)
0.5 (0.02)	

If the injection timing is outside the specified range, continue with the following steps.

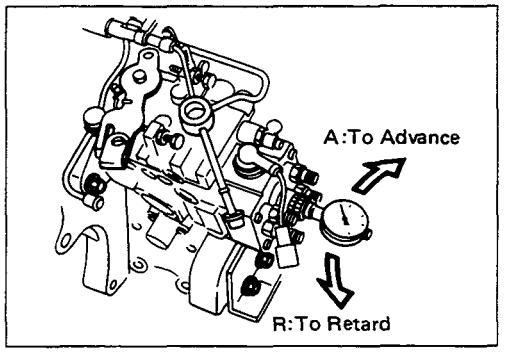

11. Loosen the injection pump fixing nuts and bracket bolts.
12. Adjust the injection pump setting angle.

	When large than standard valve	When smaller than standard valve
Gear drive	A	R

A : Move the injection pump toward the engine.
R : Move the injection pump away from the engine.

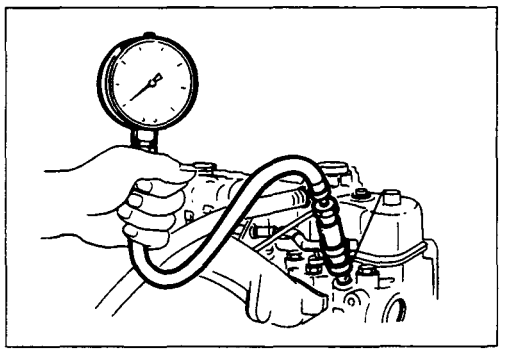

COMPRESSION PRESSURE MEASUREMENT

1. Start the engine and allow it to idle until the coolant temperature reaches 70 — 80°C (158 — 176°F).
2. Remove the following parts.
   - Glow plugs
   - Fuel cut solenoid connector
3. Set the adapter and compression gauge to the No. 1 cylinder glow plug hole.

   Compression Gauge
   (with Adapter): 5-8840-2008-0 (J-29762)

   Adapter: 5-8531-7001-0

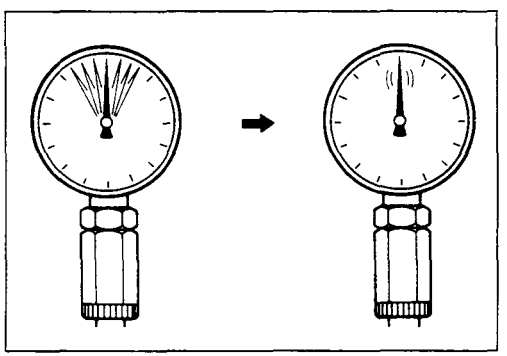

4. Turn the engine over with the starter motor and take the compression gauge reading.

Compression Pressure	kg/cm^2 (psi/kPa) at 200 rpm
Standard	Limit
31 (441/3,038)	22 (313/2,156)

5. Repeat the procedure (Steps 3 and 4) for the remaining cylinders.

   If the measured value is less than the specified limit, refer to "Troubleshooting" in this Manual.

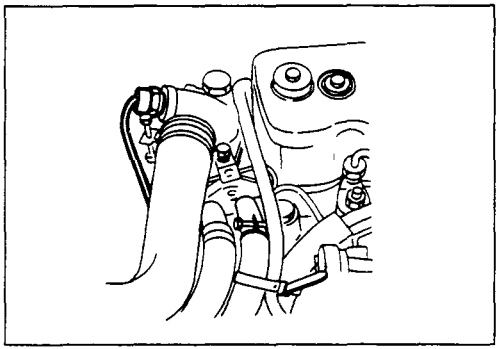

PRE-HEATING SYSTEM

System Inspection Procedure

1. Disconnect the thermo-switch on the thermostat outlet pipe.

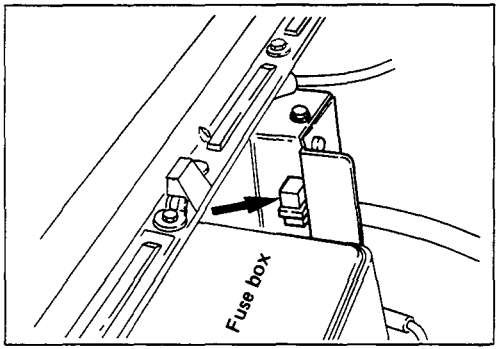

2. Turn the starter switch to the "ON" position.

   If the Pre-heating System is operating properly, the glow relay will make a clicking sound about 15 seconds after the starter switch is turned on.

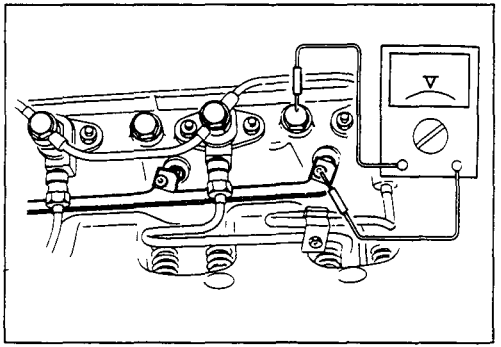

3. Measure the glow plug terminal voltage with a circuit tester immediately after turning the starter switch to the "ON" position.

Glow Plug Terminal Voltage	V
Approx. 11	

GENERAL DESCRIPTION

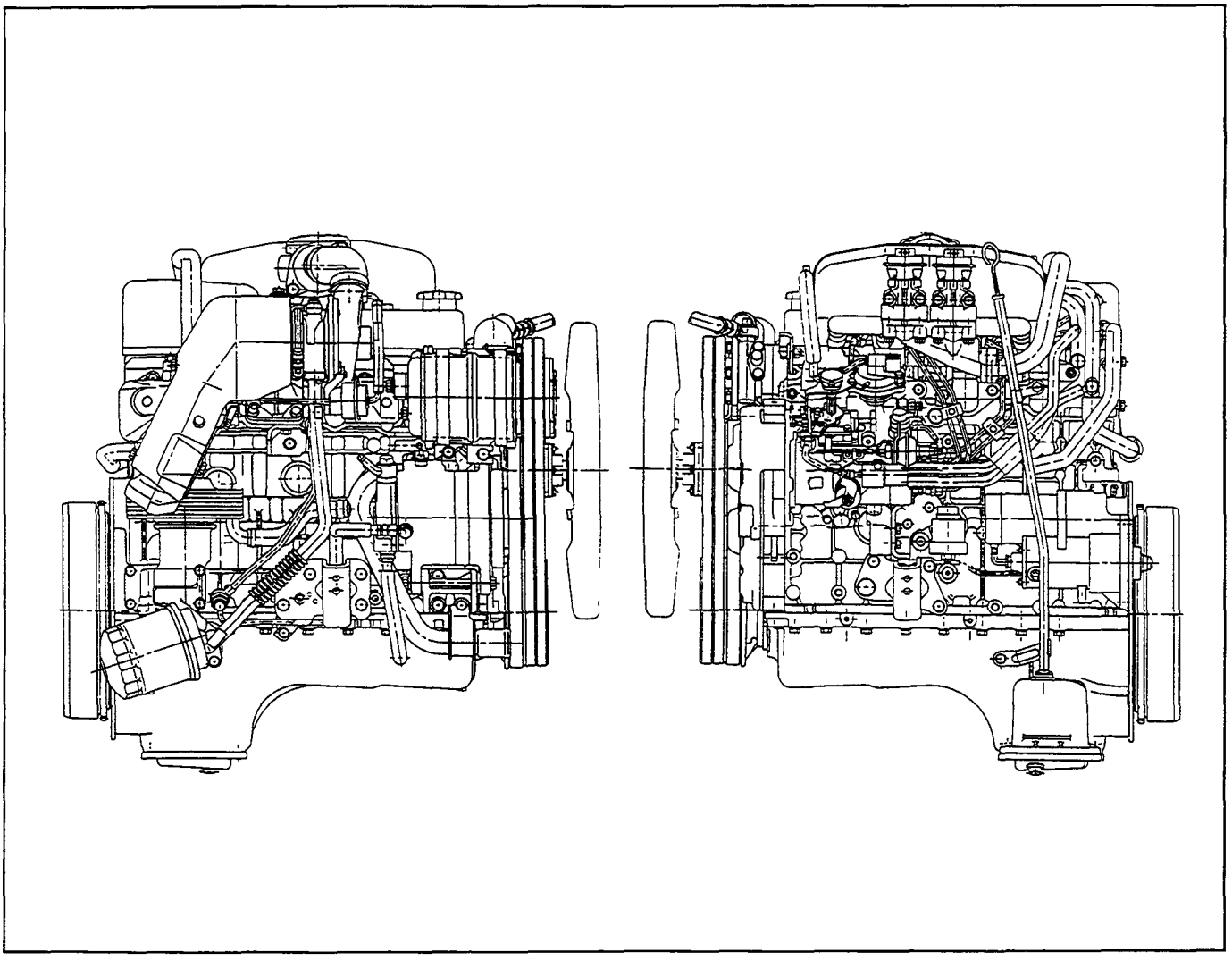

The 4J series automotive diesel engine has SPECIAL DESIGNED combustion chambers in the piston. This design provides superior fuel economy over a wide range of driving conditions.

Auto-thermatic pistons with cast steel struts are used to reduce thermai expansion and resulting engine noise when the engine is cold.

Chrome plated dry type cylinder liners provide the highest durability.

The laminated steel sheet cylinder head gasket is very durable and, to increase the head gasket reliability.

The crankshaft has been tufftrided to provide a longer service life. Because the crankshaft is tufftrided, it cannot be reground.

The engines are equipped with the VE-Type distributor injection pump.

The 4JB1T and 4JA1T engines are turbocharger equipped.

REMOVAL AND INSTALLATION

Read this Section carefully before performing any removal and installation procedure. This Section gives you important points as well as the order of operation. Be sure that you understand everything in this Section before you begin.

Important Operations – Removal

- ▲ Carefully remove the piping, hoses, wiring harness connectors, engine control cables, and control rods from the engine.
- ▲ Remove the clutch sleeve cylinder, the back up light switch connector, and the speedometer cable from the transmission.

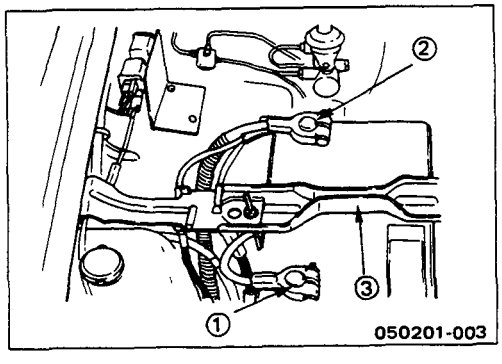

Battery

1. Disconnect the battery cable ① and the grounding cable ② from the battery terminals.
2. Remove the battery clamp ③.

   Take care not to accidentally short the battery with the spanner or some other tool.
3. Remove the battery.
4. Disconnect the battery cable at the starter motor and the ground cable at the cylinder body.

05020103

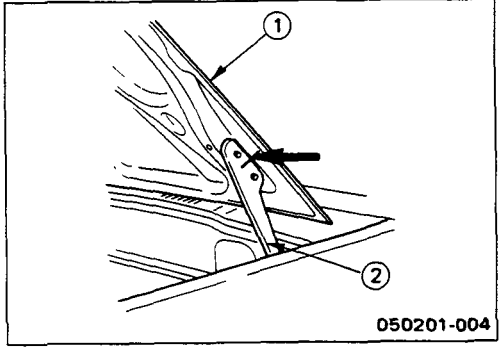

Engine Hood

Apply setting marks to the engine hood ① and the engine hood hinges ② before removing the engine hood.

This will facilitate reinstallation of the engine hood to its original position.

05020104

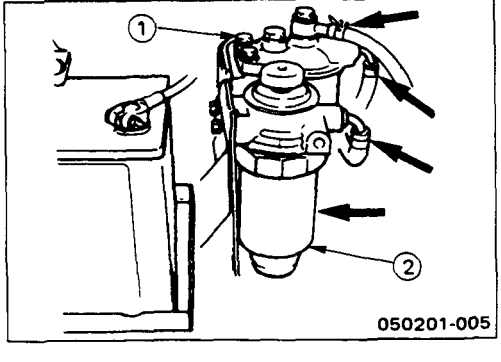

Fuel Filter and Water Separator

1. Pull the fuel hose from the fuel filter ① and the water separator ②.
2. Plug the fuel hose to prevent fuel leakage.
3. Remove the fuel filter and the water separator.

Air Cleaner

Remove the air cleaner duct from the engine.

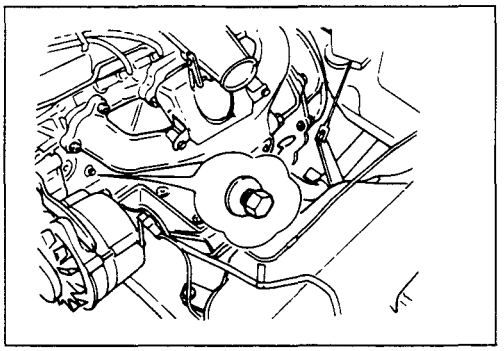

Coolant

Remove the coolant drain plug (at the lower left of the engine) and the radiator drain plug.

Allow the engine coolant to drain completely.

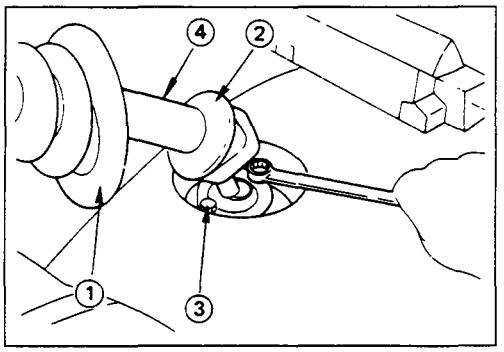

Gear Shift Lever

1. Place the gear shift lever in the neutral position.
2. Remove the front console from the floor panel.
3. Pull the gear shift lever grommet ① and the dust cover ② to the top of the gear shift lever.
4. Remove the gear shift lever cover bolt ③.
5. Remove the gear shift lever ④.

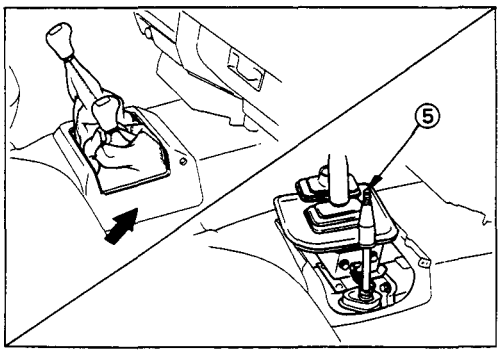

6. Remove the gear shift lever hole cover ⑤ or the center console from the floor.

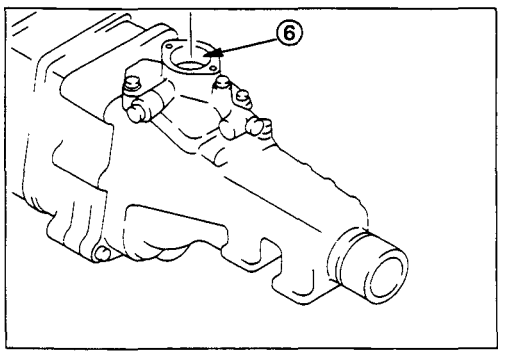

7. Remove the quadrant box ⑥ from the transmission rear cover.

Note:

Cover the quadrant box hole to prevent the entry of foreign material into the transmission.

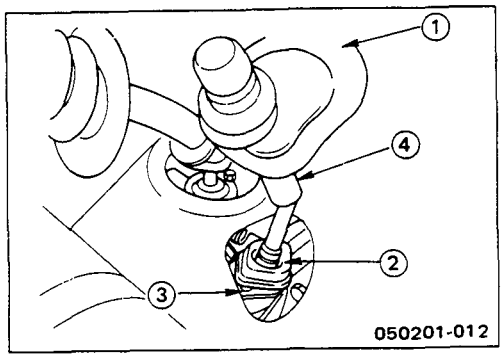

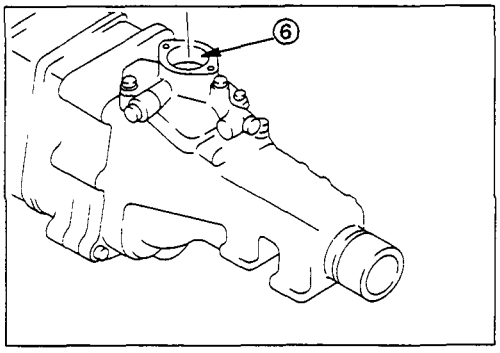

Transfer Change Lever (For 4 x 4)

Perform this procedure after removing the gear shift lever.

1. Place the transfer change lever in the "H" position.
2. Pull the transfer change lever grommet ① and the dust cover ② to the top of the transfer change lever.
3. Remove the retainer bolts ③.
4. Remove the transfer change lever ④ along with the retainer and the ball seat cover.
5. Remove the change lever hole cover ⑤ or the center console from the floor.
6. Remove the quadrant box ⑥ from the transfer case adapter.

Note:

Cover the quadrant box hole and the change lever hole to prevent the entry of foreign material into the transmission.

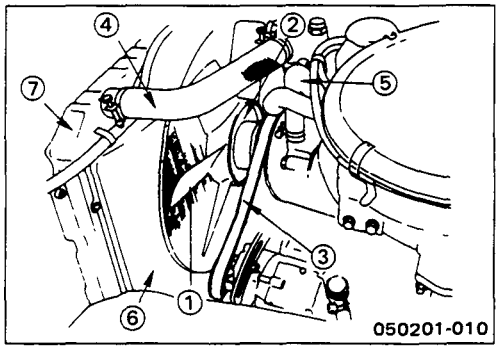

Radiator

1. Remove the cooling fan ①, the pulley ②, and the belt ③.
2. Disconnect the radiator upper hose ④and the radiator lower hose ⑤ from the engine.
3. Remove the radiator shroud ⑥.
4. Remove the radiator grille from the deflector panel.
5. Remove the radiator ⑦.

   Take care not to damage the radiator core.
6. Remove the radiator undercover from the chassis frame.

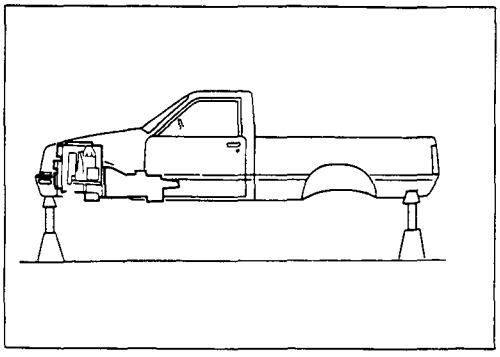

Supporting the Vehicle

1. Jack up the vehicle.
2. Place chassis stands at the front and the rear of the vehicle.
3. Remove the wheels from the vehicle.

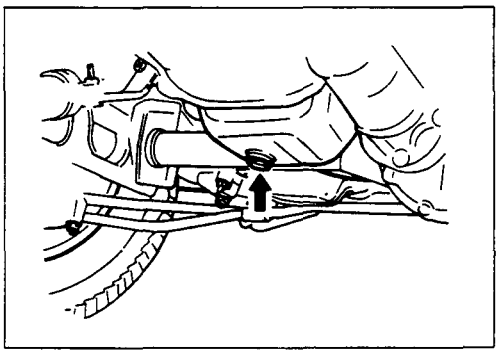

Engine Oil Draining

Remove the oil pan drain plug to drain the engine oil.

Do this while the engine is hot.

Do not forget to reinstall the drain plug after draining the engine oil.

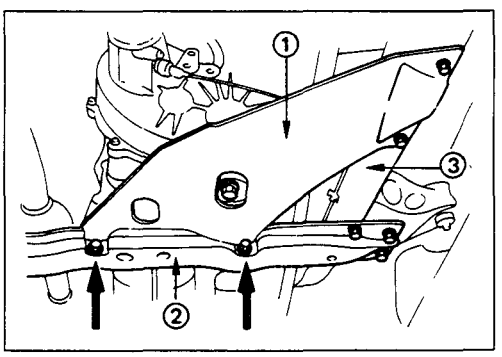

Transfer Case Protector (4 x 4 model)

Remove the transfer case protector ① from the transmission mounting member ② and the side member ③.

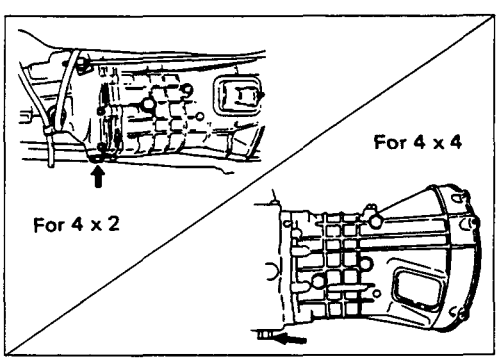

Transmission Oil Draining

1. Remove the transmission oil drain plug.
2. Replace the drain plug after draining the oil.

Control Cables or Rods

1. Disconnect the clutch control cable or the hydraulic cylinder from the transmission.
2. Disconnect the parking brake control cable from the rear wheel brake back plate.
3. Disconnect the speedometer drive cable from the transmission.

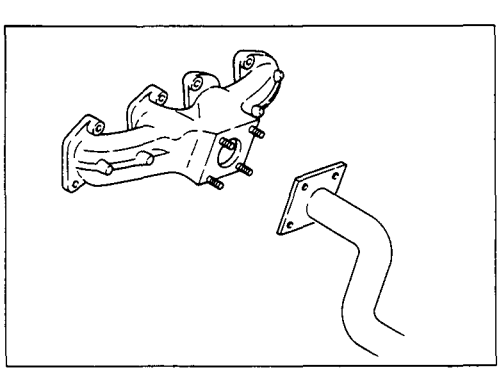

Exhaust Pipe

1. Disconnect the exhaust pipe from the exhaust manifold.

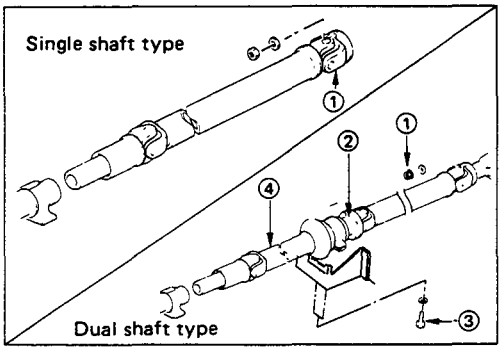

Rear Propeller Shaft

1. Remove the propeller shaft flange yoke at the drive pinion ①.
2. Remove the 2nd propeller shaft flange yoke bolts ② at the center bearing.
3. Remove the center bearing retainer bolts ③.
4. Remove the 1st propeller shaft ④ together with the center bearing from the transmission mainshaft spline.

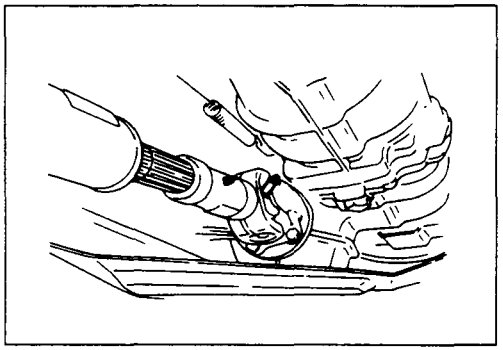

Front Propeller Shaft (For 4 x 4)

Remove the splined yoke flange bolt at the transfer output shaft.

Do not allow the splined yoke to fall away from the front propeller shaft.

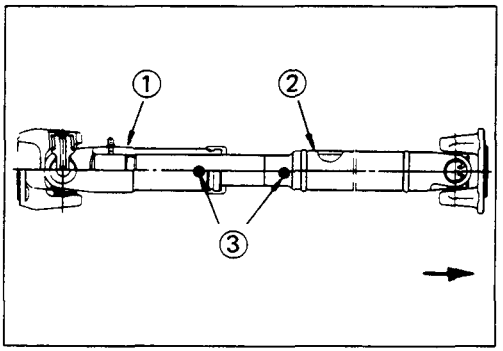

If the splined yoke should fall away from the front propeller shaft, align the setting marks ③ on the splined yoke ① and the propeller shaft ② to reassemble the two parts.

The setting marks are punched circles approximately ③ mm (0.12 in) in diameter.

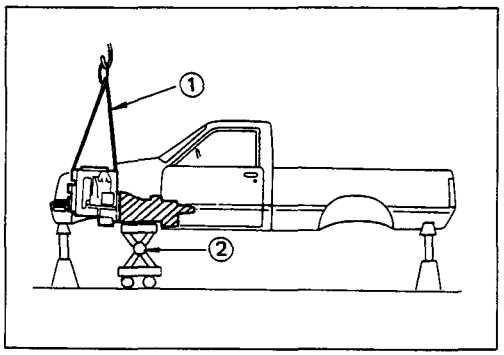

Transmission

1. Check that the lifting wires ① are securely attached.
2. Operate the hoist to slightly raise the engine.

Warning:

Take care not to lift the chassis from the chassis stands.

If you do accidentally raise the chassis from the chassis stands, make absolutely certain that the chassis stands are correctly positioned before lowering the chassis.

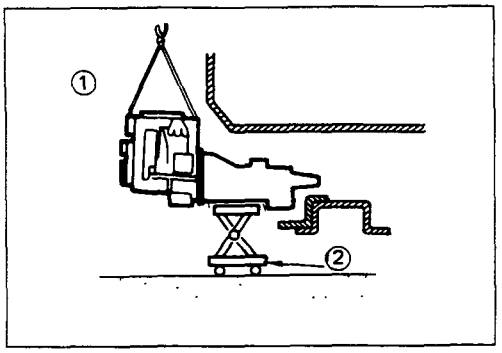

3. Place the jack ② beneath the transmission case.
4. Operate the jack to slightly raise the transmission.

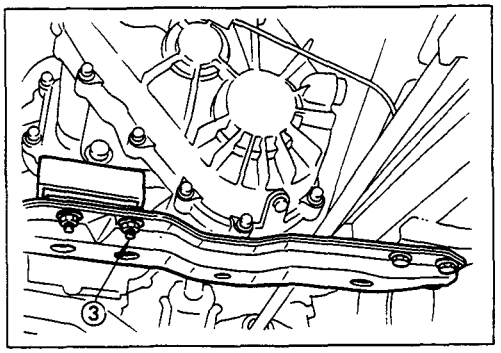

5. Remove the transmission member lower mounting bolts ③ fixing the transmission member to the chassis frame rail.

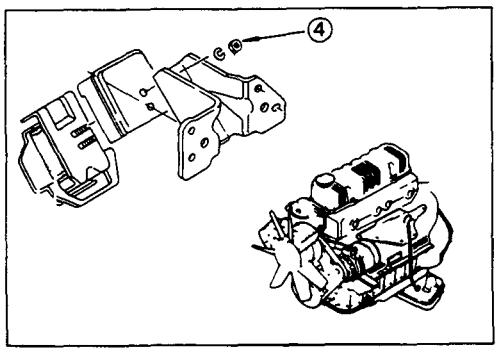

6. Loosen the engine mounting nuts ④ at the rubber mountings.
7. Use the jack to slightly lower the transmission.
8. Remove the remaining transmission coupling bolts.
9. Separate the transmission from the engine.

   Take care not to damage the transmission, the engine, and their related parts.

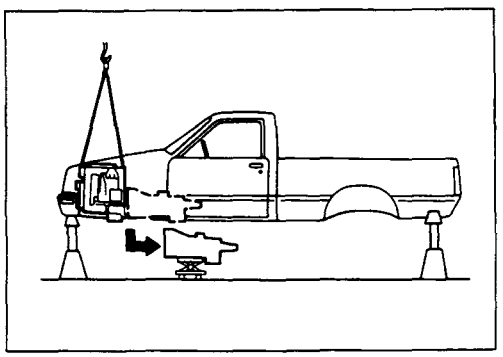

10. Use the jack to lower the transmission together with the mounting member to the floor.

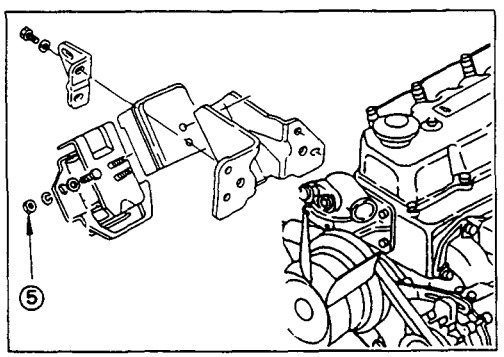

11. Remove the engine mounting bolts ⑤ from the chassis frame.

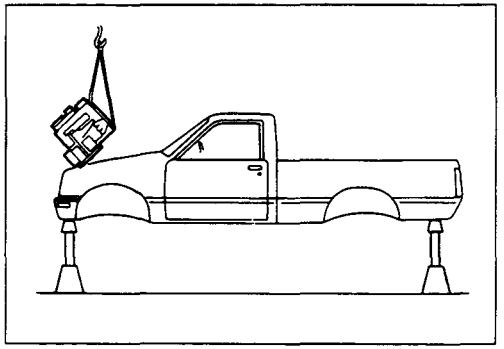

12. Use the hoist to lift the engine from the engine compartment.

Important Operations – Installation

Follow the removal procedure in the reverse order to perform the installation procedure. Pay careful attention to the important points during the installation procedure.

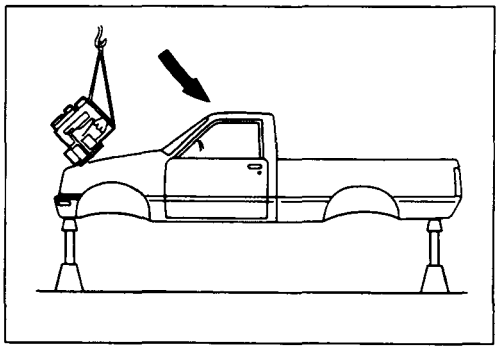

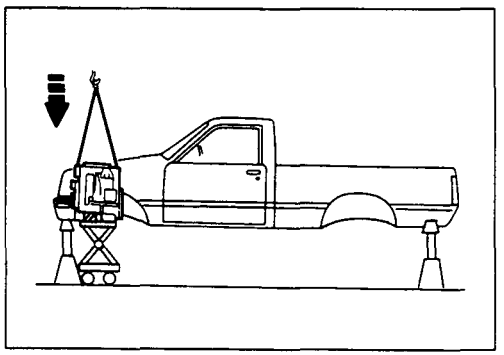

Engine

1. Attach a lifting wire to the engine lifting hanger.
2. Operate the hoist to position the engine above the engine compartment.
   Hold the front of the engine slightly higher than the rear.
3. Slowly lower the engine into the engine compartment.
   Be careful not to damage the brake pipes, the fuel pipes, and other exposed parts.
4. Support the oil pan with a jack.
5. Temporarily tighten the engine front mounting rubber nuts.

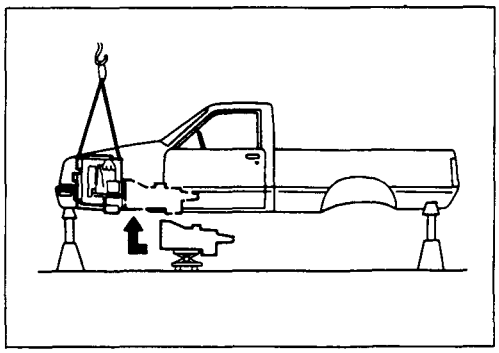

Transmission

1. Apply a thin coat of molybdenum disulfide grease to the top gear shaft spline.
2. Place the transmission with the mounting rubbers on a transmission jack.
3. Carefully move the transmission jack and transmission into position behind the cab.

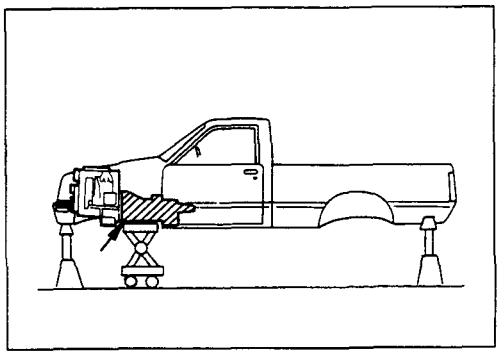

4. Slowly raise the transmission jack until the front of the transmission is aligned with the engine flywheel.

   The slope of the engine and the transmission must be the same.
5. Align the top gear shaft spline with the clutch driven plate internal spline.
6. Install the transmission to the engine.

   Tighten the transmission coupling nuts and bolts to the specified torque.

Transmission Coupling Nut and Bolt Torque	kg·m(lb.ft/N·m)
3.8 ± 0.8 (27.5 ± 5.8/37.2 ± 7.8)	

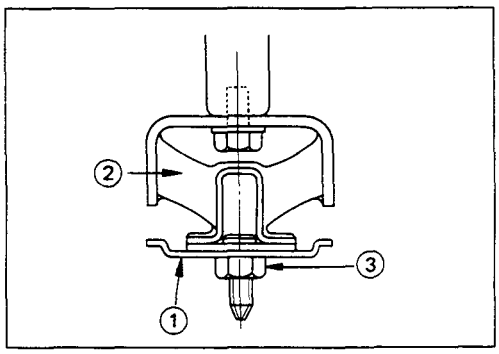

7. Install the mounting member ① to the mounting rubber ②.
8. Tighten the mounting member nuts ③ to the specified torque.

Mounting Rubber Nut Torque	kg·m(lb.ft/N·m)
4.2 ± 0.5 (30.4 ± 3.6/41.2 ± 4.9)	

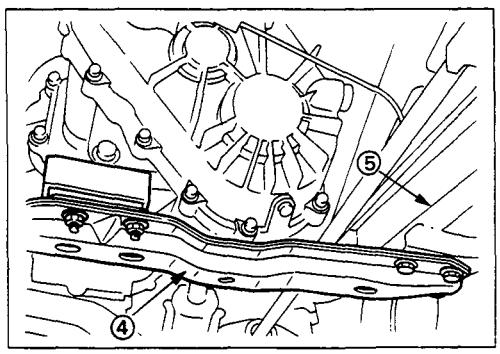

9. Install the mounting member ④ to the sidemembers ⑤.
10. Tighten the mounting member bolts to the specified torque.

Mounting Member Bolt Torque	kg·m(lb.ft/N·m)
7.8 ± 1.6 (56.1 ± 11.2/76.0 ± 15.2)	

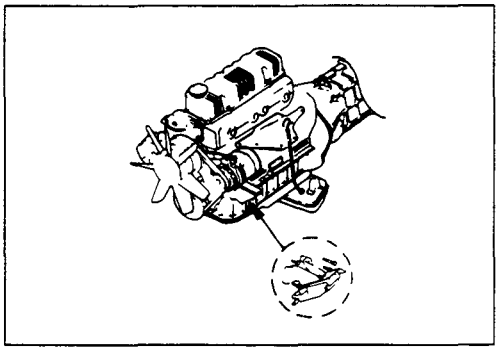

11. Tighten the engine mounting rubber nuts to the specified torque.

Engine Mounting Rubber Nut Torque	kg·m(lb.ft/N·m)
4.2 ± 0.5 (30.4 ± 3.6/41.2 ± 4.9)	

Exhaust Pipe

Connect the exhaust pipe to the exhaust manifold.

Torque	kg·m(lb.ft/N·m)
6.8 ± 0.5 (49 ± 3.6/67 ± 5)	

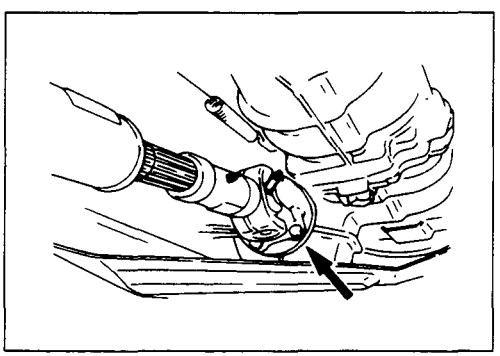

Front Propeller Shaft (For 4 × 4)

1. Connect the propeller shaft flange yoke to the matching flange.
2. Tighten the propeller shaft flange yoke bolt to the specified torque.

Propeller Shaft Flange Yoke Bolt Torque	kg·m(lb.ft/N·m)
3.6 ± 0.3 (26.1 ± 2.2/35.3 ± 3.0)	

Note:

If the splined yoke and the front propeller shaft have accidentally separated, align their setting marks and recouple them.

Refer to "FRONT PROPELLER SHAFT REMOVAL."

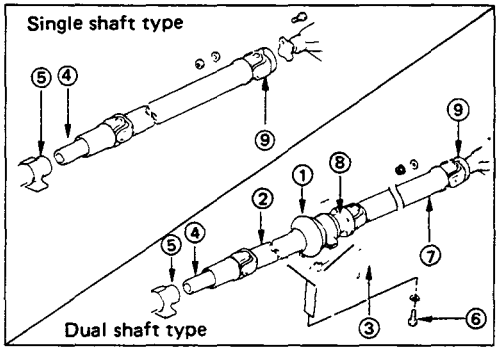

Rear Propeller Shaft

1. Place the center bearing and retainer ① together with the 1st propeller shaft ② on the No. 4 cross-member ③.
2. Insert the splined yoke ④ into the transmission main shaft spline ⑤.
3. Tighten the center bearing retainer bolts ⑥ to the specified torque.

Center Bearing Retainer Bolt Torque	kg·m(lb.ft/N·m)
6.2 ± 0.2 (44.8 ± 1.5/60.8 ± 2.0)	

4. Connect the 2nd propeller shaft ⑦ center coupling side ⑧ and drive pinion side ⑨.

Propeller Shaft Flange Yoke Bolt Torque	kg·m(lb.ft/N·m)
3.6 ± 0.3 (26.0 ± 2.2/35.3 ± 2.9)	

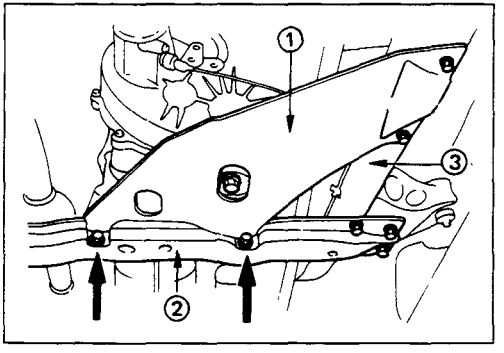

Transfer Case Protector (For 4 × 4)

1. Install the transfer case protector ① to the mounting member ② and the sidemembers ③.
2. Tighten the transfer case protector bolts to the specified torque.

Transfer Case Protector Bolt Torque	kg·m(lb.ft/N·m)
3.7 ± 1.0 (26.8 ± 7.2/36.3 ± 9.8)	

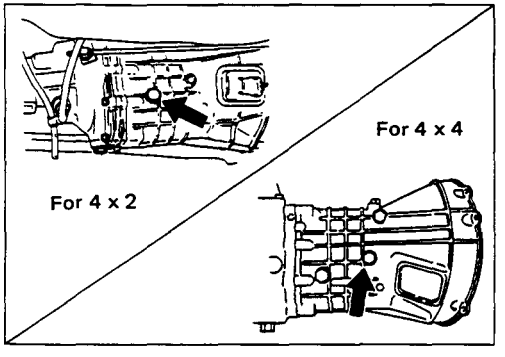

Gear Shift Lever

1. Replenish the transmission case and the transfer case with the specified engine oil.

Transmission and Transfer Case Oil	lit(US/UK gal)	
	4 × 2	4 × 4
MSG	1.55 (0.41/0.34)	4.40 (1.16/0.97)
MUA	2.95 (0.65/0.54)	2.95 (T/M) 1.45 (Transter)

2. Install the quadrant box to the transmission rear cover.

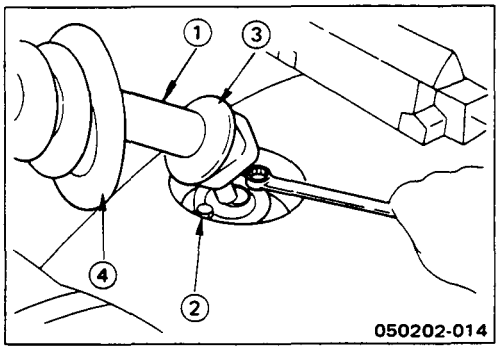

3. Install the gear shift lever ① to the transmission case.
4. Tighten the gear shift lever cover ② bolts to the specified torque.

Shift Lever Cover Bolt Torque	kg·m(lb.ft/N·m)
2.0 ± 0.2 (14.5 ± 1.5/19.6 ± 2.0)	

5. Install the dust cover ③ and the grommet ④.

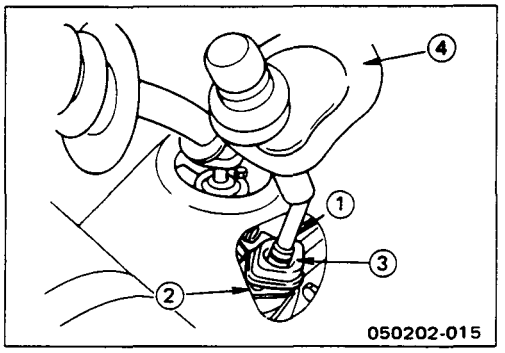

Transfer Change Lever (For 4 × 4)

1. Insert the transfer change lever ① into the transfer side case.
2. Install the ball seat cover along with the change lever retainer ②.
3. Tighten the change lever retainer bolts to the specified torque.

Change Lever Retainer Bolt Torque	kg·m(lb.ft/N·m)
2.0 ± 0.2 (14.5 ± 1.5/19.6 ± 2.0)	

4. Install the dust cover ③ and the grommet ④.

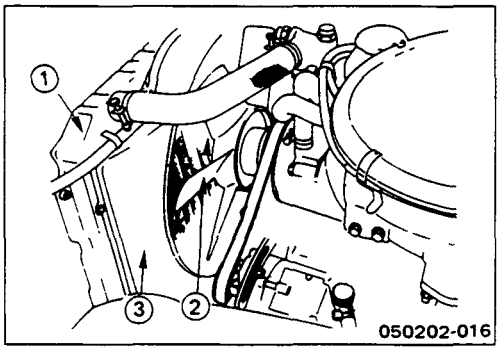

Radiator

1. Install the radiator ①.
   Be careful not to damage the radiator core.
2. Install the cooling fan ② and the fan shroud ③.
3. Connect the radiator upper and lower hoses.
4. Install the radiator undercover to the chassis frame.
5. Install the radiator grill to the deflector panel.

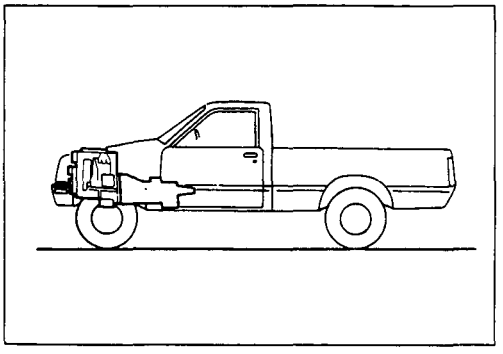

Lowering the Vehicle

1. Install the wheels to the vehicle.
2. Place a jack beneath the vehicle.
3. Raise the jack to remove the chassis stands.
4. Lower the vehicle to the ground.

Coolant Replenishment

Replenish the cooling system with coolant.

Coolant Capacity	lit(US/UK gal)
4JA1	7.0 (1.8/1.5)
4JB1 with turbo engine	9.5 (2.5/2.1)

Engine Oil Replenishment

1. Fill the engine through the filler port with new engine oil of the specified grade.

Engine Oil Capacity and Grade		lit(US/UK gal)
Capacity	5.0 (1.32/1.1) only oil pan	
Grade	For 4JA1	CC or CD
	For 4JB1T	CD

2. Start the engine and allow it to idle for several minutes.
3. Stop the engine and wait five minutes for the oil to settle.
4. Recheck the oil level and replenish if necessary.

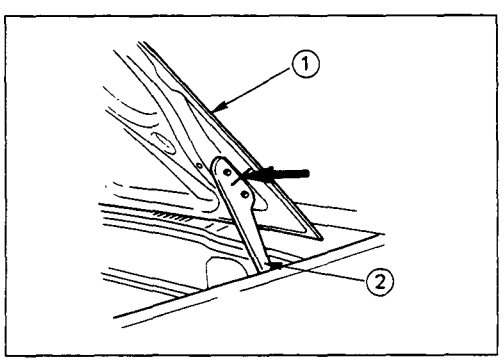

Engine Hood

Align the setting marks (applied at removal) on the engine hood ① and the engine hood hinges ② to install the engine hood.

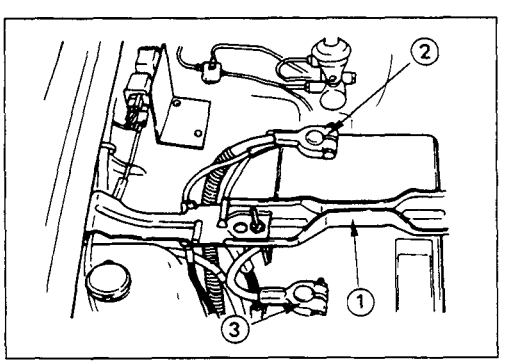

Battery

1. Check the battery fluid level and the specific gravity.
2. Secure the battery with the battery clamp.
   Do not overtighten the battery clamp.
3. Connect the battery cable ② and the ground cable ③ to the battery.
4. Connect the battery cable to the starter motor and the ground cable to the cylinder body.
5. Apply grease to the battery terminals.

Engine Warm-Up

After completing the required maintenance procedures, start the engine and allow it to idle until it is warm.

Check the following:

1. Engine idling speed
   Refer to "SERVICING" for the idle speed adjustment procedure.
2. Engine noise level
3. Engine lubricating system and cooling system
   Carefully check for oil and coolant leakage.
4. Engine control cable operation
5. Clutch engagement
6. Indicator warning light operation

ENGINE REPAIR KIT

All of the numbered parts listed below are included in the Engine Repair Kit.
The gaskets marked with an asterisk (*) are also included in the Top Overhaul Kit.

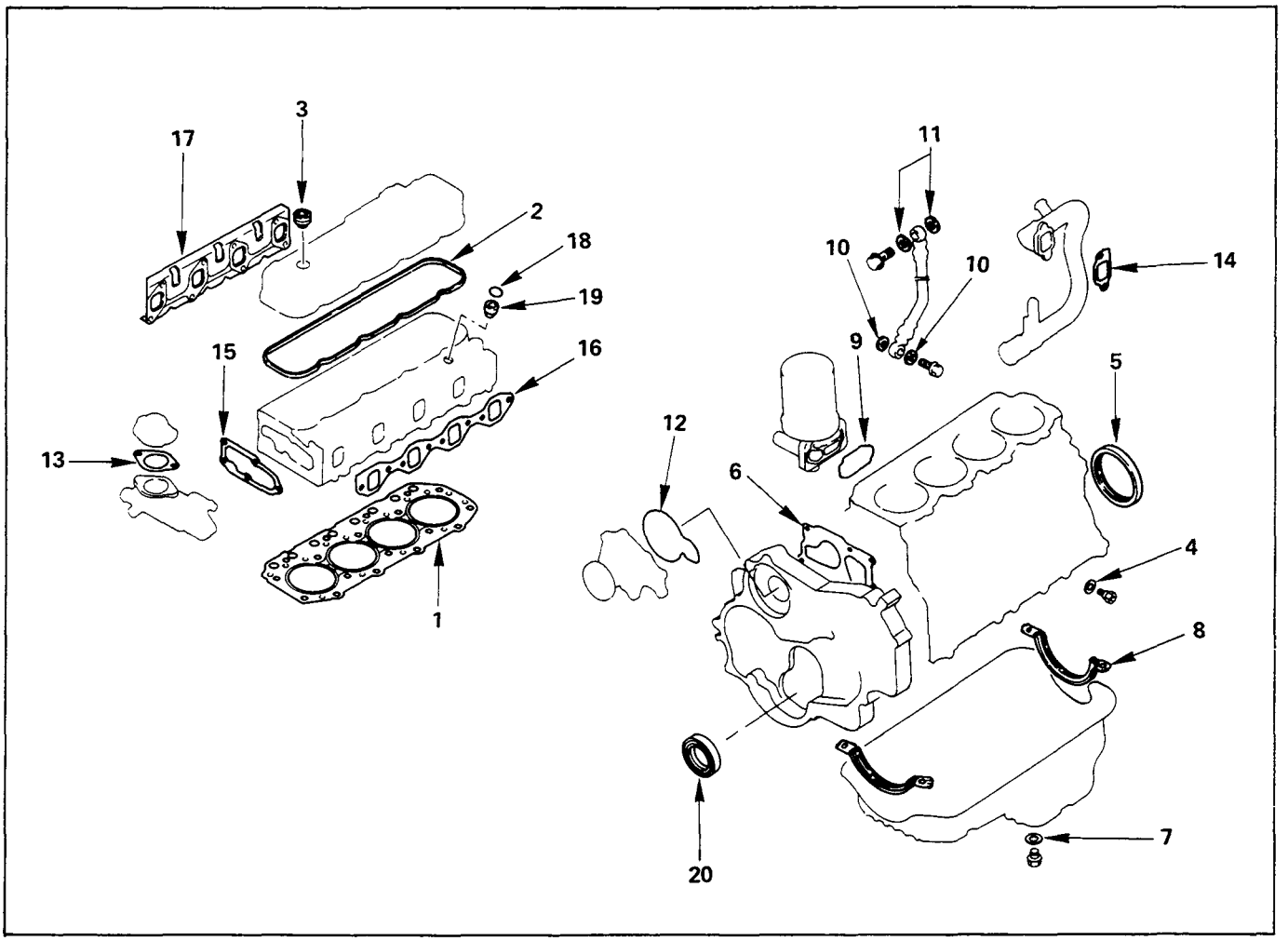

* 1. Cylinder head gasket
* 2. Head cover gasket
* 3. Head cover cap nut gasket
4. Drain cock gasket
5. Crankshaft rear oil seal
6. Gear case gasket
7. Oil pan drain plug gasket
8. Oil pan gasket
9. Oil filter gasket
10. Joint bolt gasket
11. Vacuum pump gasket
12. Water pump O-ring
* 13. Water outlet pipe gasket
* 14. Intake pipe gasket
15. Thermostat housing gasket
* 16. Intake manifold gasket
* 17. Exhaust manifold gasket
* 18. Nozzle holder O-ring
* 19. Nozzle holder gasket
20. Crankshaft front oil seal

ENGINE OVERHAUL

REMOVAL

EXTERNAL PARTS

These removal steps are based on the 4JB1T engine

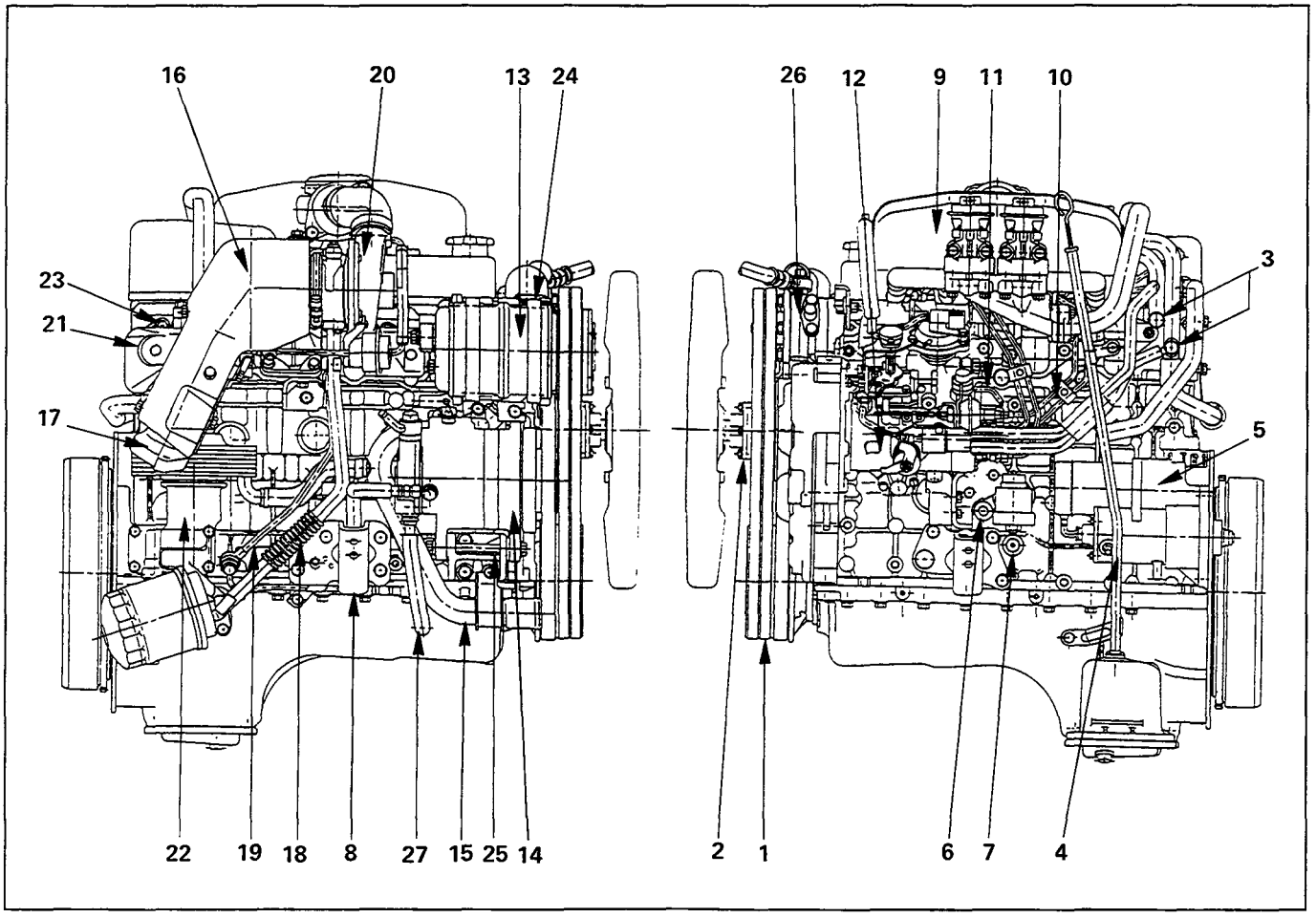

Removal Steps

1. Cooling fan drive belt
2. Cooling fan pulley
3. Heater pipe (rear side)
4. Oil level gauge and guide tube
5. Starter motor
6. Water drain cock
7. Oil pressure warning switch and nipple
8. Engine mounting bracket
9. ▲ Intake manifold
10. ▲ Fuel injection pipe with clip
11. Fuel leak off pipe
12. Injection pump
13. Compressor
14. Alternator and adjusting plate
15. Water inlet pipe
16. Turbocharger heat protector
17. Exhaust adapter
18. Turbocharger oil return pipe
19. Turbocharger oil feed pipe
20. ▲ Turbocharger
21. Exhaust manifold heat protector
22. Oil cooler with Oil filter
23. Exhaust manifold
24. Compressor bracket
25. Alternator bracket
26. Power steering oil pump
27. Vacuum pipe

Important Operations

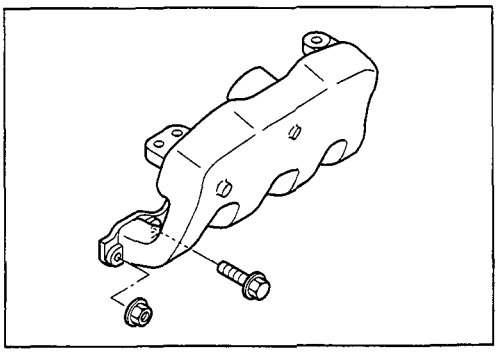

9. Intake Manifold

1) Disconnect the PCV hose from the cylinder head cover.
2) Disconnect the intake duct and intake rubber hose from the turbocharger.
3) Remove the upper intake manifold the lower intake manifold with intake duct, and the PCV hose.

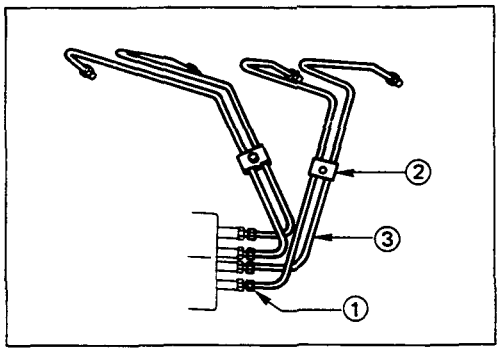

10. Fuel Injection Pipe with Clip

1) Loosen the injection pipe sleeve nuts at the delivery valve side ①.

   Do not apply excessive force to the injection pipes.
2) Loosen the injection pipe clips ②.
3) Remove the injection pipes ③.

Note:

Plug the delivery holder ports with the shipping caps to prevent the entry of foreign material.

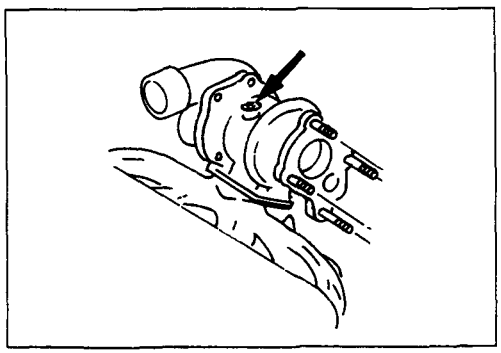

20. Turbocharger

Plug the turbocharger body oil ports after removing the turbocharger assembly to prevent the entry of foreign material.

INTERNAL PARTS

MAJOR COMPONENTS

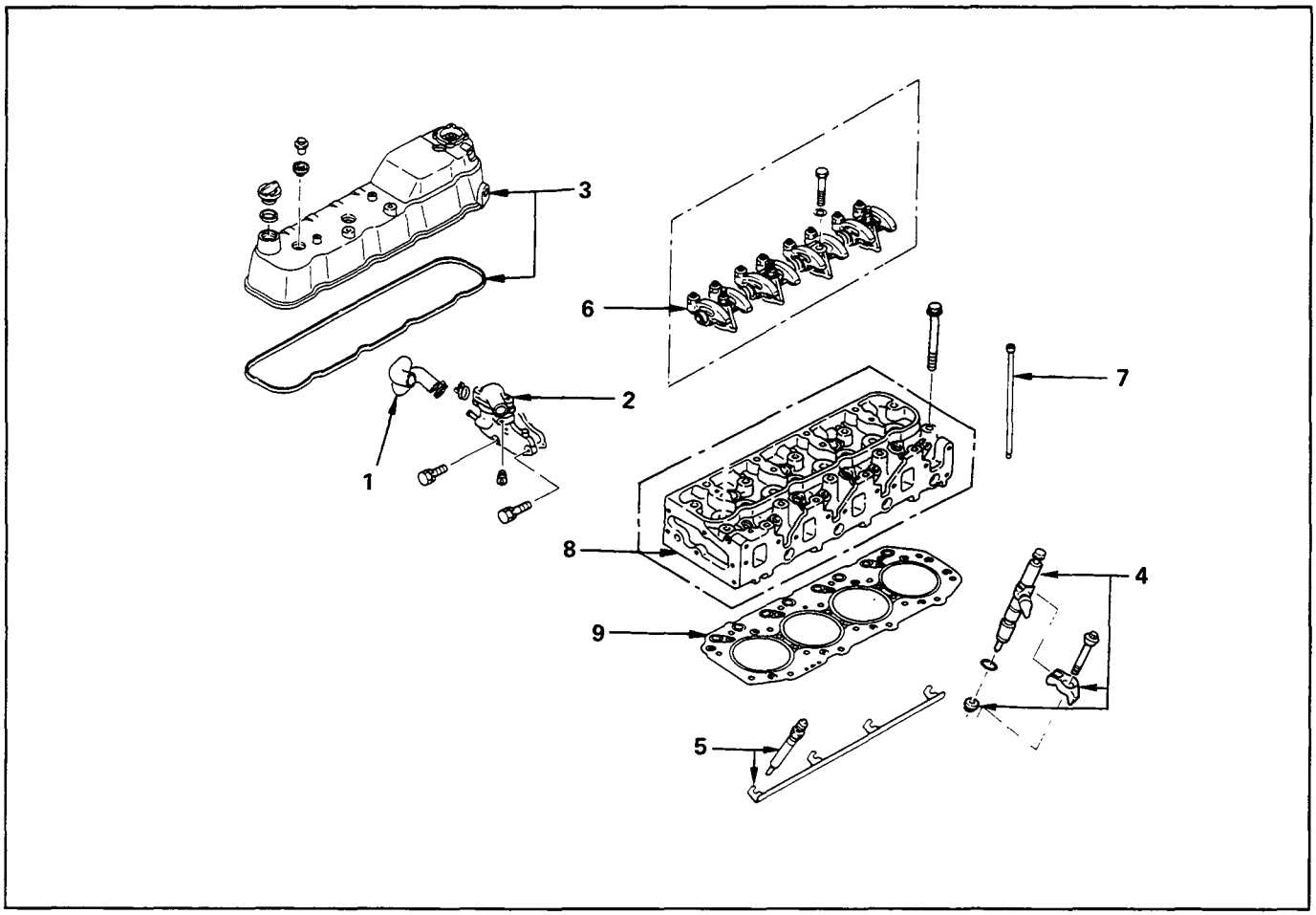

Disassembly Steps-1

1. Water bypass pipe
2. Thermostat housing with thermo switch
3. Cylinder head cover
▲ 4. Injection nozzle holder
5. Glow plug and glow plug connector
▲ 6. Rocker arm shaft and rocker arm
7. Push rod
▲ 8. Cylinder head
9. Cylinder head gasket

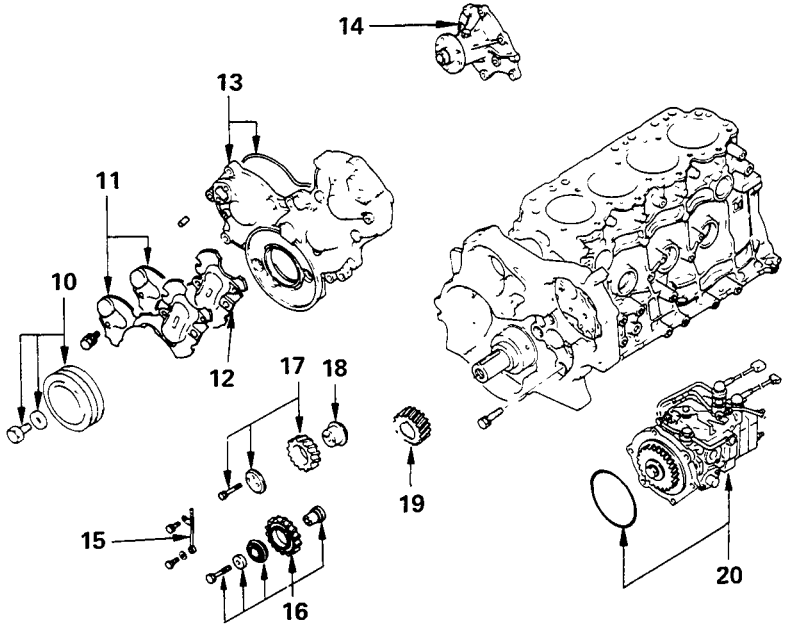

Disassembly Steps-2

▲ 10. Crankshaft damper pulley
11. Gear case upper cover and lower cover
12. Space rubber
13. Timing gear case cover
14. Water pump
15. Timing gear oil pipe
16. Idler gear "B" and shaft
▲ 17. Idler gear "A"
18. Idler gear shaft
19. Crankshaft timing gear
▲ 20. Injection pump

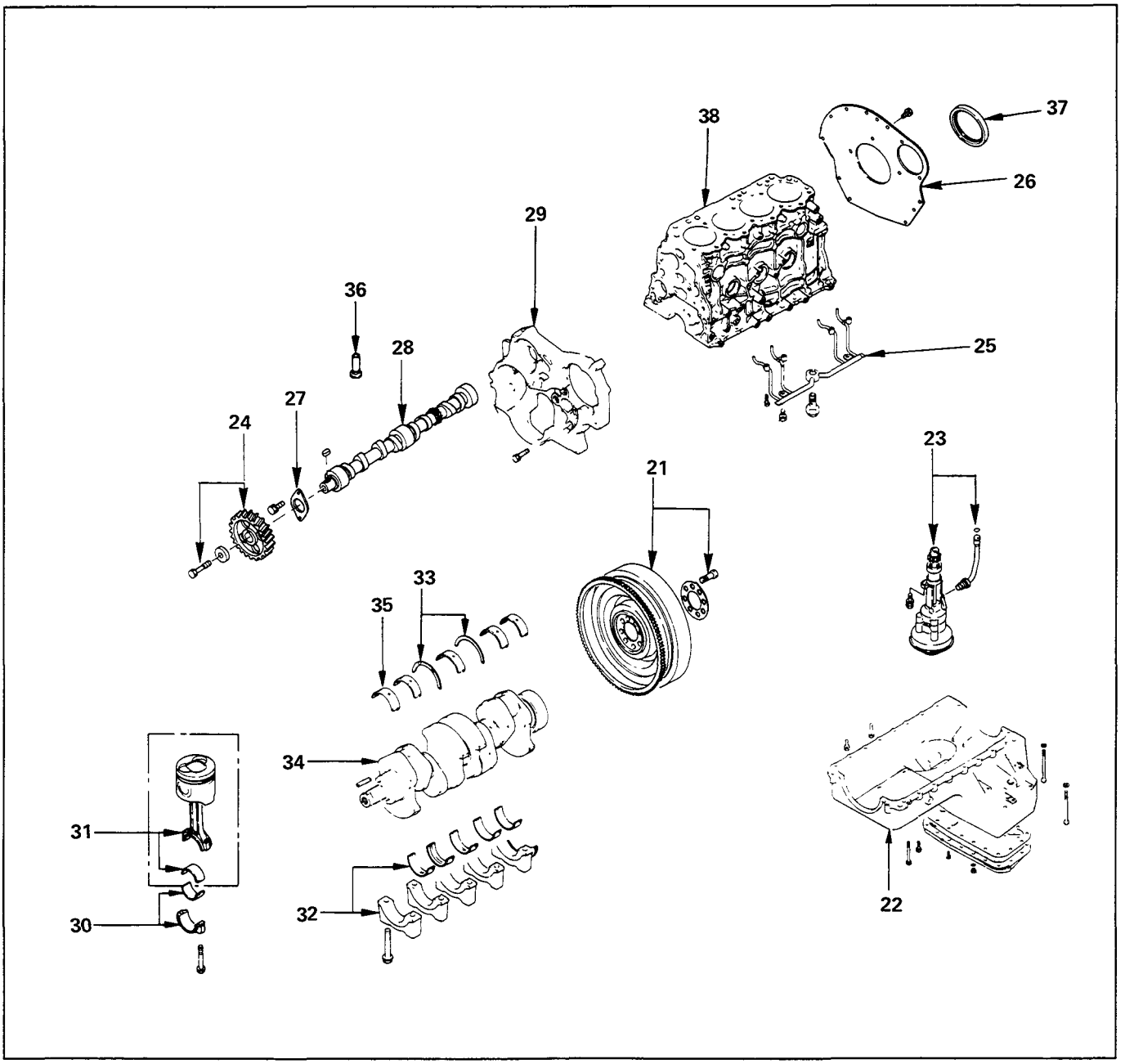

Disassembly Steps-3

21. Flywheel
22. Oil pan
▲ 23. Oil pump with oil pipe
▲ 24. Camshaft timing gear
▲ 25. Piston cooling oil pipe
▲ 26. Cylinder body rear plate
27. Camshaft thrust plate
▲ 28. Camshaft
29. Timing gear case
▲ 30. Connecting rod bearing cap with lower bearing
▲ 31. Piston and connecting rod with upper bearing.
▲ 32. Crankshaft bearing cap with lower bearing
33. Crankshaft thrust bearing
34. Crankshaft
▲ 35. Crankshaft upper bearing
▲ 36. Tappet
▲ 37. Crankshaft rear oil seal
38. Cylinder body

0503010118A

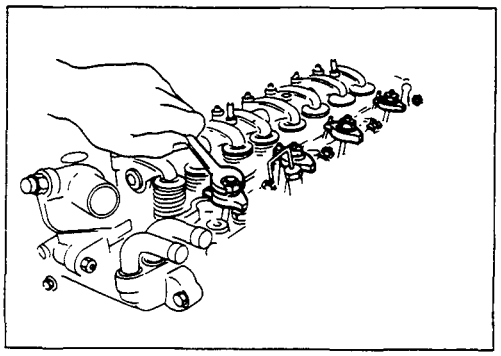

Important Operations

4. Injection Nozzle Holder

1. Remove the nozzle holder bracket nuts.

0503010118B

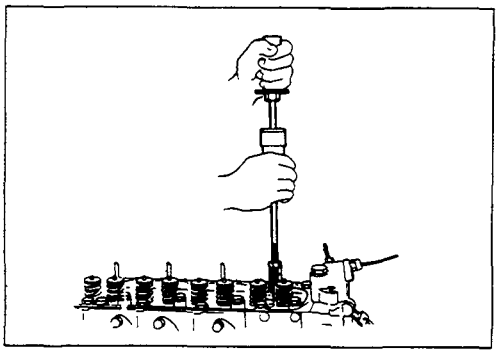

2. Use the nozzle holder remover and the sliding hammer to remove the nozzle holder together with the holder bracket.

Nozzle Holder Remover: 5-8840-2034-0
Sliding Hammer: 5-8840-0019-0

0503010105

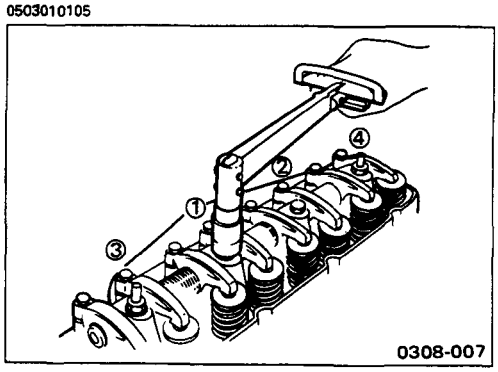

6. Rocker Arm Shaft and Rocker Arm

Loosen the rocker arm shaft bracket bolts in numerical order a little at a time.

Note:

Failure to loosen the rocker arm shaft bracket bolts in numerical order a little at a time will adversely affect the rocker arm shaft.

0503010106

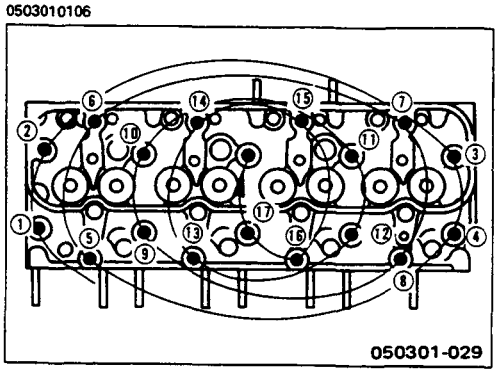

8. Cylinder Head

Loosen the cylinder head bolts in numerical order a little at a time.

Note:

Failure to loosen the cylinder head bolts in numerical order a little at a time will adversely affect the cylinder head lower surface.

050301010101

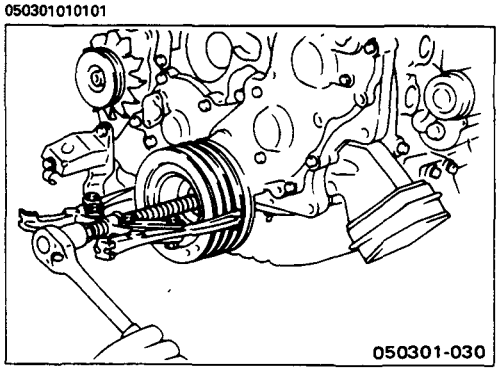

10. Crankshaft Damper Pulley

Use the remover to remove the damper pulley

NOTE:

Hold the flywheel ring gear stationary to prevent the crankshaft from turning when removing the crankshaft pulley.

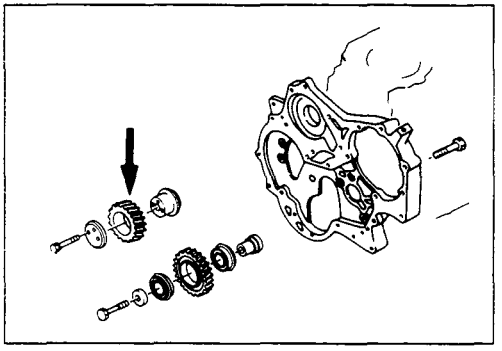

17. Idler Gear "A"

1. Measure the camshaft timing gear backlash and the crankshaft timing gear backlash before removing the idler gear.
2. Measure the idler gear end play before removing the idler gear.

Note:

Refer to the following items for details on the backlash and end play measurement procedures.

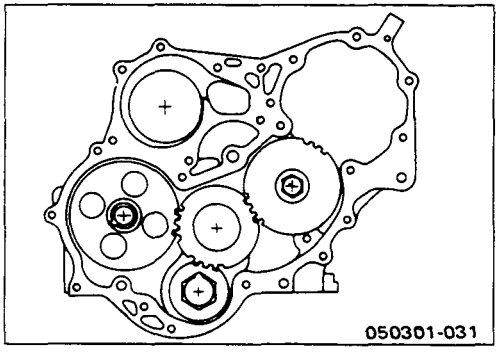

Timing Gear Backlash Measurement

1) Set a dial indicator to the timing gear to measured.

   Hold both the gear to be checked and the adjusting gear stationary.

2) Move the gear to be checked as far as possible to both the right and the left.

   Take the dial indicator reading.

   If the measured value exceeds the specified limit, the timing gear must be replaced.

Timing Gear Backlash — mm(in)

Standard	Limit
0.10—0.17 (0.0039—0.0067)	0.30 (0.012)

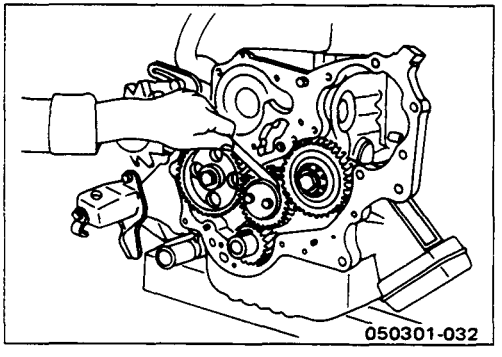

Idler Gear "A" End Play Measurement

Insert a feeler gauge between the idler gear and the thrust collar to measure the gap and determine the idler gear end play.

If the measured value exceeds the specified limit, the thrust collar must be replaced.

Idler Gear End Play — mm(in)

Standard	Limit
0.07 (0.0028)	0.2 (0.0079)

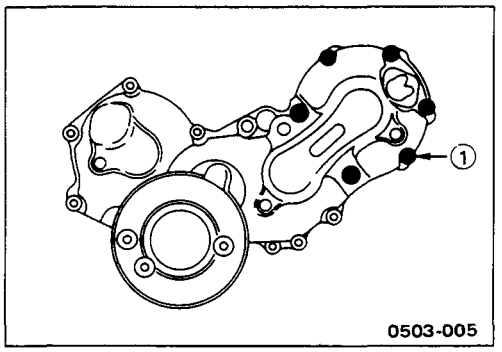

20. Injection Pump

1. Remove the six injection pump bracket bolts ① from the timing gear case.

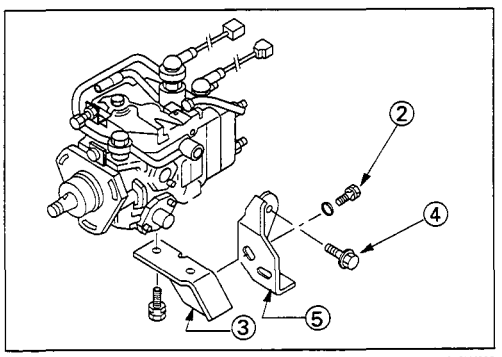

2. Remove the injection pump rear bracket bolts ② from the injection pump bracket ③.
3. Remove the injection pump rear bracket bolts ④ and the bracket ⑤ from the cylinder body.
4. Pull the injection pump along with the injection pump timing gear free toward the rear of the engine.

Note:

Plug the injection pump delivery holder ports with the shipping caps (or the equivalent) to prevent the entry of foreign material.

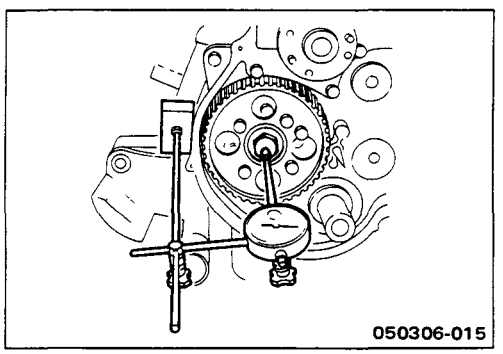

19. Camshaft Timing Gear

1. Use a dial indicator to measure the camshaft end play.

   This must be done before removing the camshaft gear.

   If the camshaft end play exceeds the specified limit, the thrust plate must be replaced.

Camshaft End Play mm(in)

Standard	Limit
0.050 – 0.114 (0.002 – 0.0044)	0.20 (0.008)

0503050101B

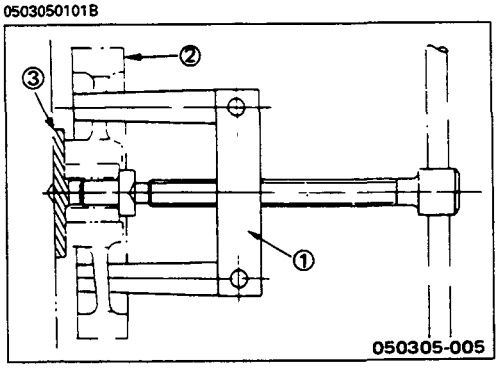

2. Remove the camshaft timing gear bolt from the camshaft.

Note:

Hold the camshaft stationary to prevent the camshaft from turning.

3. Use the universal puller ① to pull out the camshaft timing gear ②.

   Universal Puller: 5-8521-0002-0

4. Remove the thrust plate ③.

0503010107

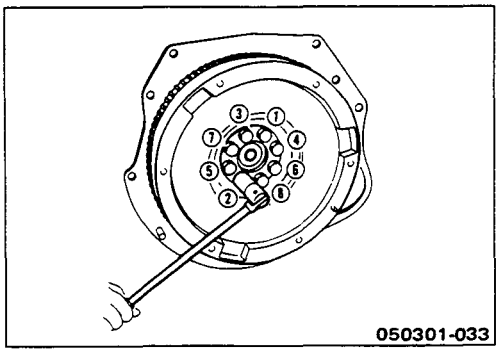

21. Flywheel

Block the crankshaft with a piece of hard wood to prevent the flywheel from turning.

Loosen the flywheel bolts in numerical order a little at a time.

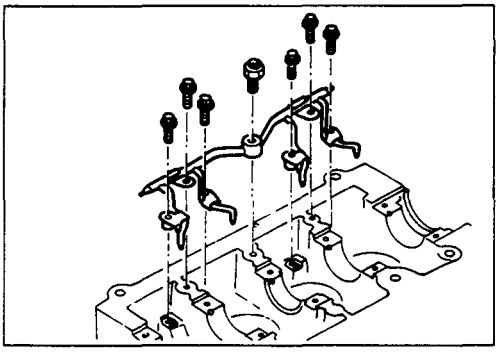

25. Piston Cooling Oil Pipe

The oiling jet uses thin steel tubing which is easily bent. Accidental contact between the oiling jet and the cylinder body, piston, or a tool will damage the oiling jet.

Never attempt to repair a damaged oiling jet. Replace it with a new one.

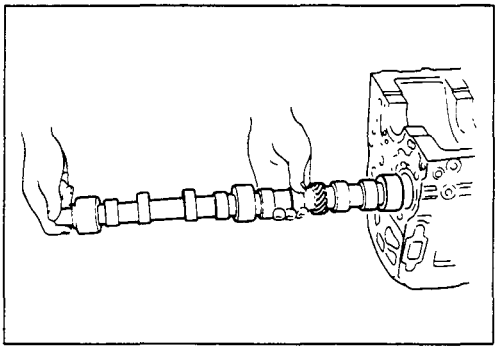

28. Camshaft

Jiggle the camshaft with your hand as you pull it free from the front of the engine.

0503010112

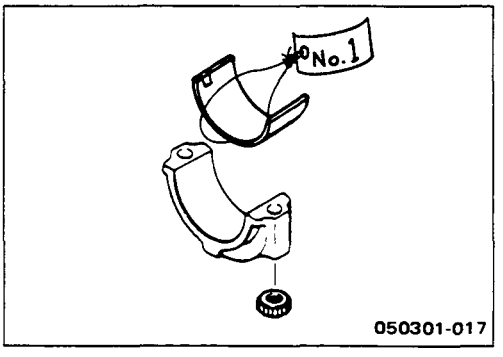

30. Connecting Rod Bearing Cap with Lower Bearing

If the connecting rod lower bearings are to be reinstalled, mark their fitting positions by tagging each bearing with the cylinder number from which it was removed.

0503010113A

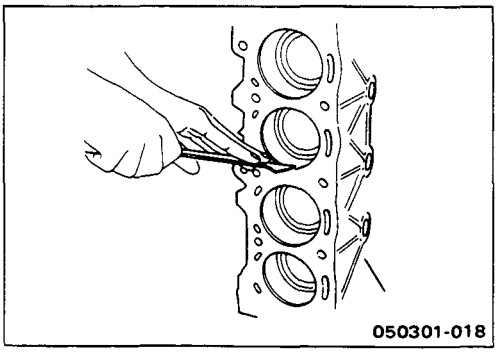

31. Piston and Connecting Rod with Upper Bearing

1) Remove carbon deposits from the upper portion of the cylinder wall with a scraper before removing the piston and connecting rod.
2) Move the piston to the top of the cylinder and tap it with a hammer grip or a similar object from the connecting rod lower side to drive it out.

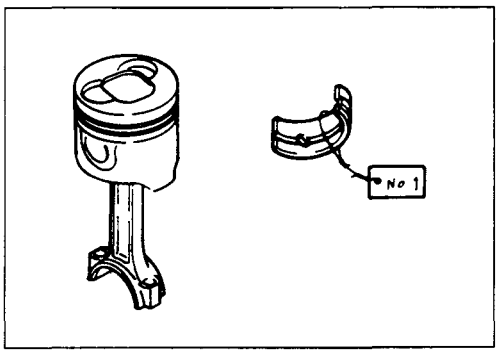

If the connecting rod upper bearings are to be reinstalled, mark their fitting positions by tagging each bearing with the cylinder number from which it was removed.

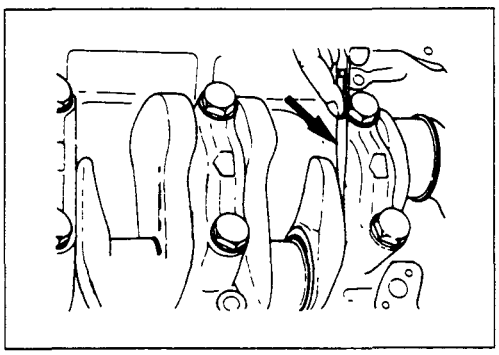

32. Crankshaft Bearing Cap with Lower Bearing

1) Measure the crankshaft end play at the center journal of the crankshaft.

   Do this before removing the crankshaft bearing caps.

   If the measured value exceeds the specified limit, the crankshaft thrust bearing must be replaced.

Crankshaft End Play — mm(in)

Standard	Limit
0.10 (0.004)	0.30 (0.012)

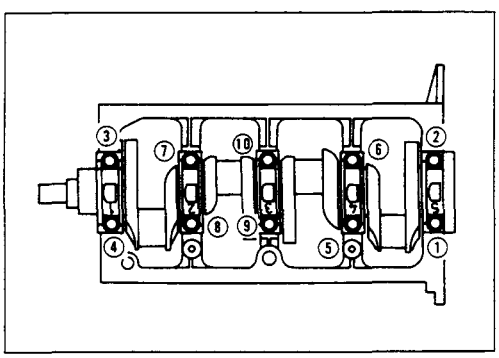

2) Loosen the crankshaft bearing cap bolts in numerical order a little at a time.

   If the crankshaft bearings are to be reinstalled, mark their fitting positions by tagging each bearing with the cylinder number from which it was removed.

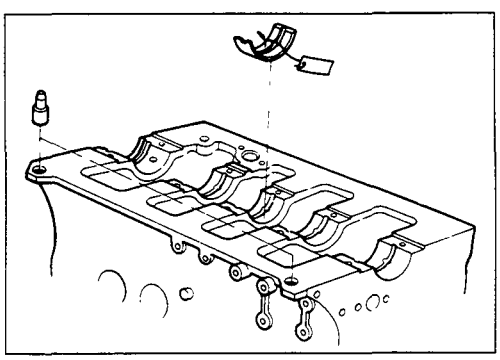

35. Crankshaft Upper Bearing

If the crankshaft upper bearings are to be reinstalled, mark their fitting positions by tagging each bearing with the cylinder number from which it was removed.

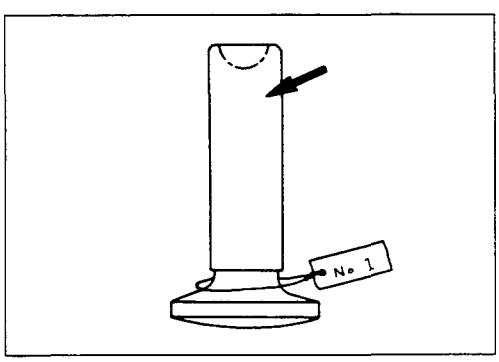

36. Tappet

If the tappets are to be reinstalled, mark their fitting positions by tagging each tappet with the cylinder number from which it was removed.

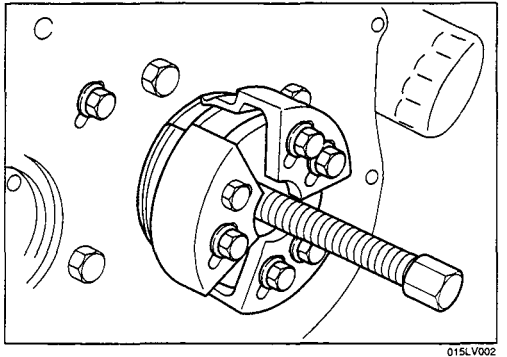

37. Crankshaft Rear Oil Seal

Be careful not to scratch the crankshaft rear oil seal fitting surfaces during the removal procedure.

With the oil seal pushed in deep, install the special tool as shown in the illustration and remove the oil seal.

Oil Seal Remover : 5-8840-2360-0

MINOR COMPONENTS

ROCKER ARM SHAFT AND ROCKER ARM

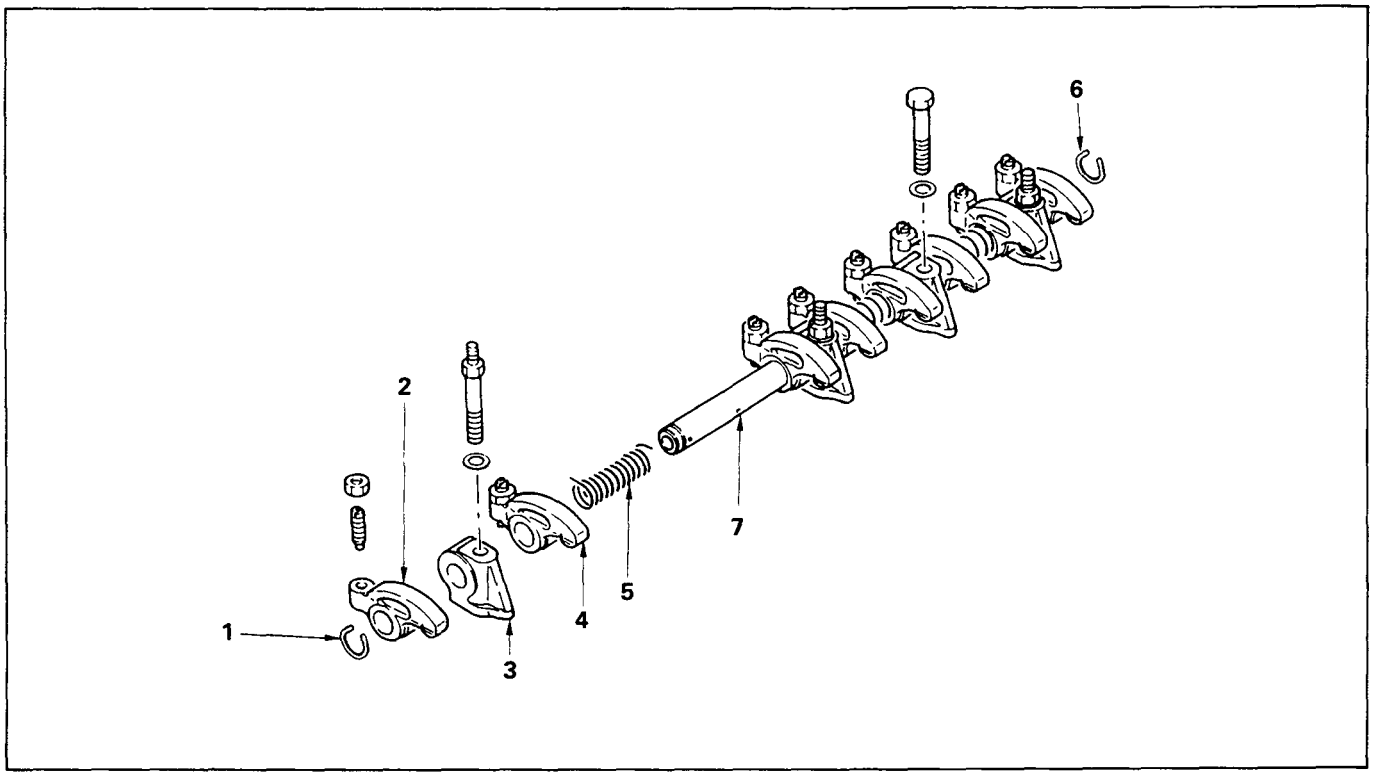

Disassembly Steps

- ▲ 1. Rocker arm shaft snap ring
- ▲ 2. Rocker arm
- ▲ 3. Rocker arm shaft bracket
- 4. Rocker arm
- 5. Rocker arm shaft spring
- 6. Rocker arm shaft snap ring
- 7. Rocker arm shaft

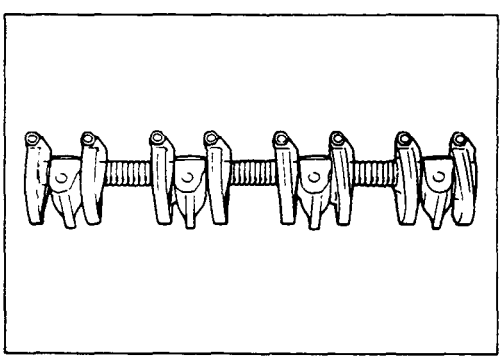

Important Operations

1. **Rocker Arm Shaft Snap Ring**
2. **Rocker Arm**
3. **Rocker Arm Shaft Bracket**
   1) Use a pair of pliers to remove the snap rings.
   2) Remove the rocker arms.
   3) Remove the rocker arm shaft brackets.

   If the rocker arms and rocker arm shaft brackets are to be reinstalled, mark their installation positions by tagging each rocker arm and rocker arm shaft bracket with the cylinder number from which it was removed.

CYLINDER HEAD

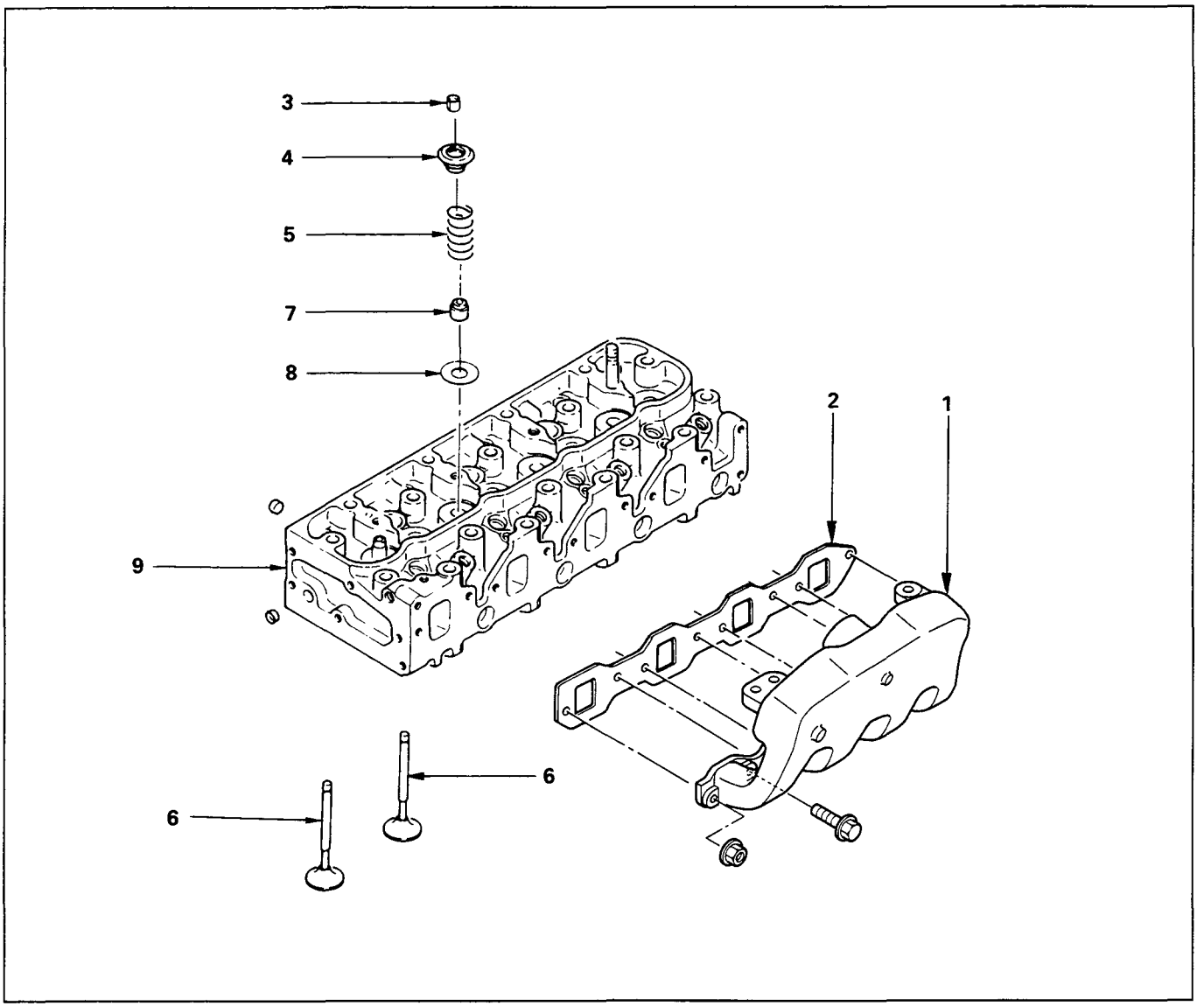

Disassembly Steps

1. Intake manifold
2. Intake manifold gasket
3. ▲ Split collar
4. Valve spring upper seat
5. Valve spring
6. ▲ Intake and exhaust valve
7. Valve stem oil seal
8. Valve spring lower seat
9. Cylinder head

05030300101

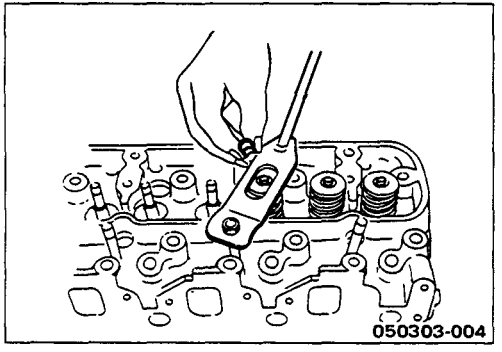

0503030102

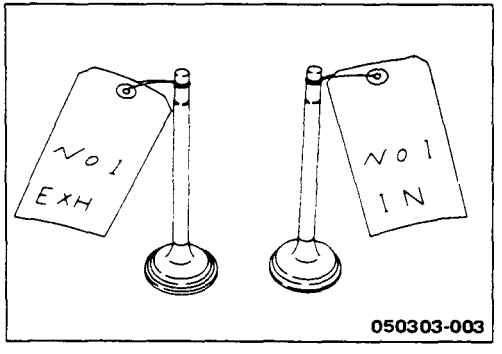

Important Operations

3. Split Collar

1) Place the cylinder head on a flat wooden surface.
2) Use the spring compressor to remove the split collars.

   Do not allow the valve to fall from the cylinder head.

   Spring Compressor: 9-8523-1423-0 (J-29760)

4. Intake and Exhaust Valve

If the intake and exhaust valves are to be reinstalled, mark their installation positions by tagging each valve with the cylinder number from which it was removed.

If the intake and exhaust valves are to be replaced, the valve guides must also be replaced.

PISTON AND CONNECTING ROD

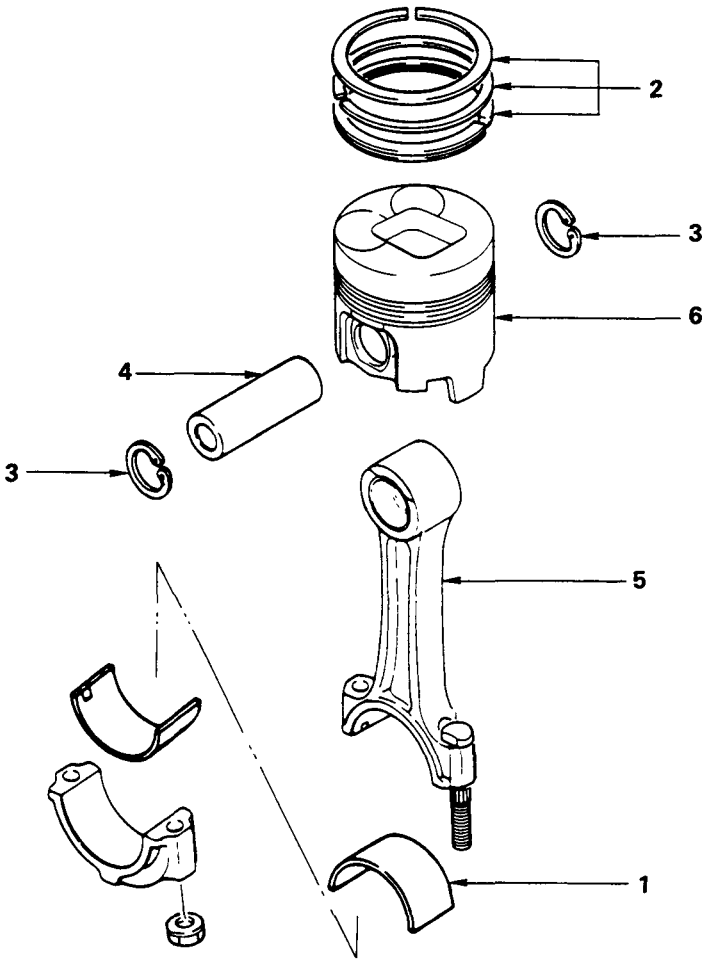

Disassembly Steps

- ▲ 1. Connecting rod bearing
- ▲ 2. Piston ring
- ▲ 3. Piston pin snap ring
- ▲ 4. Piston pin
- 5. Connecting rod
- ▲ 6. Piston

0503040101

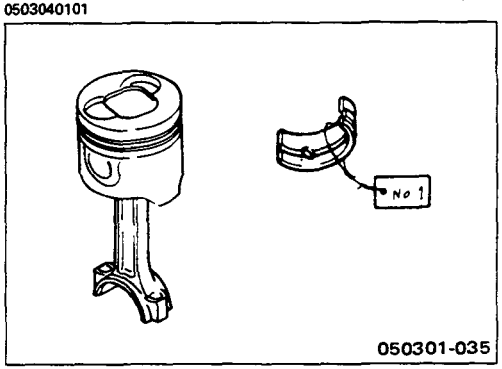

050301-035

Important Operations

1. Connecting Rod Bearing

If the connecting rod bearings are to be reinstalled, mark their fitting positions by tagging each bearing with the cylinder number from which it was removed.

0503040102

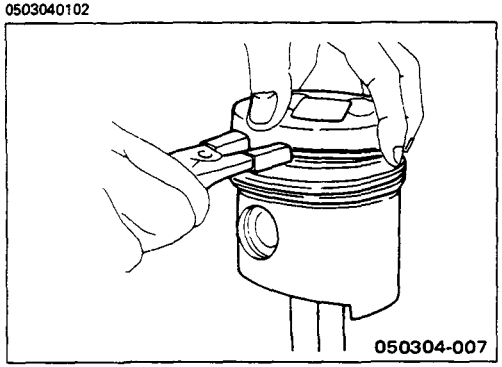

050304-007

2. Piston Ring

1) Clamp the connecting rod in a vise.

   Take care not to damage the connecting rod.

2) Use a piston ring replacer to remove the piston rings.

   Piston Ring Replacer

   Do not attempt to use some other tool to remove the piston rings. Piston ring stretching will result in reduced piston ring tension.

0503040103

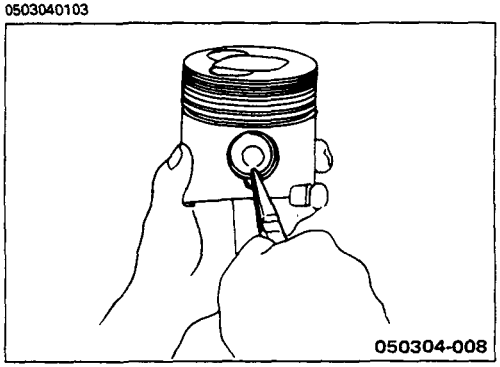

050304-008

3. Piston Pin Snap Ring

Use a pair of pliers to remove the piston pin snap rings.

0503040104

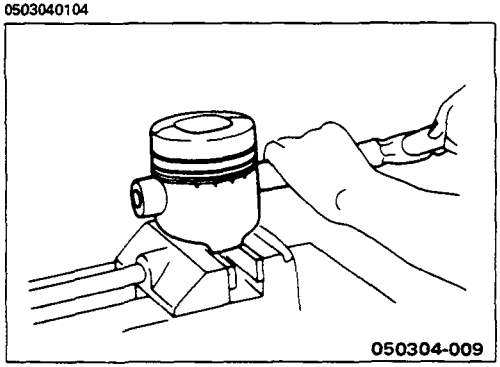

050304-009

4. Piston Pin

6. Piston

Tap the piston pin out with a hammer and a brass bar.
If the pistons and piston pins are to be reinstalled, mark their installation positions by tagging each piston and piston pin with the cylinder number from which it was removed.

INSPECTION AND REPAIR

Make the necessary adjustments, repairs, and part replacements if excessive wear or damage is discovered during inspection.

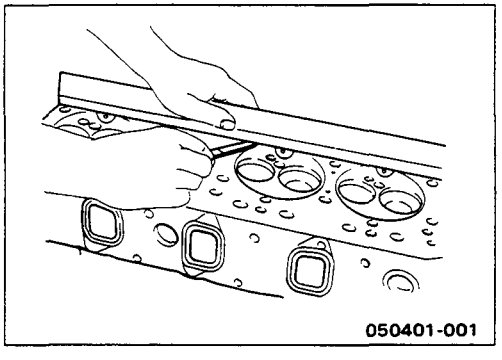

CYLINDER HEAD

Cylinder Head Lower Face Warpage

1. Use a straight edge and a feeler gauge to measure the four sides and the two diagonals of the cylinder head lower face.
2. Regrind the cylinder head lower face if the measured values are greater than the specified limit but less than the maximum grinding allowance.

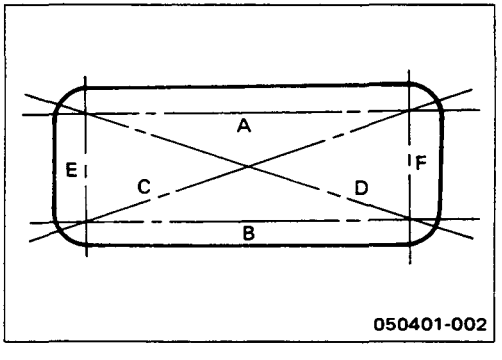

If the measured values exceed the maximum grinding allowance, the cylinder head must be replaced.

Cylinder Head Lower Face Warpage mm(in)

Standard	Limit	Maximum Grinding Allowance
0.05 (0.002) or less	0.20 (0.008)	0.30 (0.012)

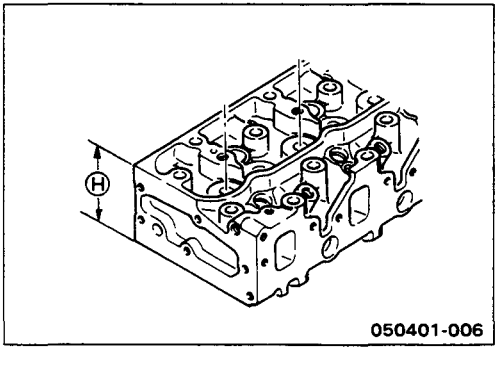

Cylinder Head Height Ⓗ (Reference) mm(in)

Standard	Limit
91.95 – 92.05 (3.620 – 3.624)	91.55 (3.60)

Note:

If the cylinder head lower face is reground, valve depression must be checked.

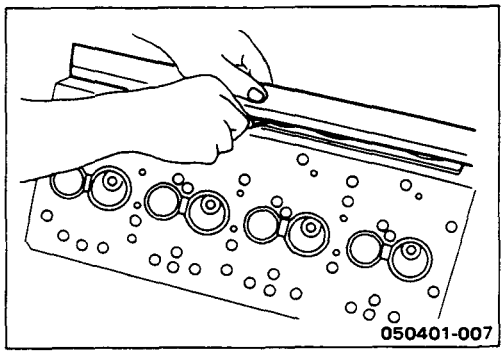

Manifold Fitting Face Warpage

Use a straight edge and a feeler gauge to measure the manifold cylinder head fitting face warpage.

Regrind the manifold cylinder head fitting surfaces if the measured values are greater than the specified limit but less than the maximum grinding allowance.

If the measured values exceed the maximum grinding allowance, the cylinder head must be replaced.

Manifold Fitting Face Warpage mm(in)

Standard	Limit	Maximum Grinding Allowance
0.05 (0.002) or less	0.20 (0.008)	0.40 (0.016)

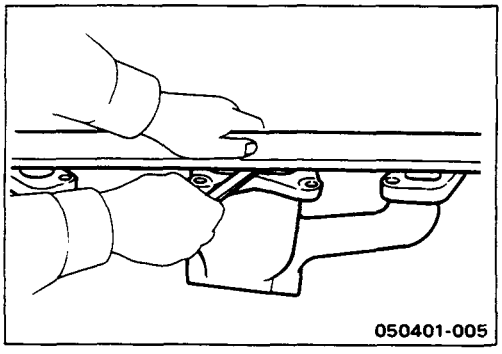

Exhaust Manifold Warpage

Use a straight edge and a feeler gauge to measure the manifold cylinder head fitting face warpage.
If the measured values exceed the specified limit, the manifold must be replaced.

Exhaust Manifold Warpage mm(in)

Standard	Limit
0.05 (0.002) or less	0.20 (0.008)

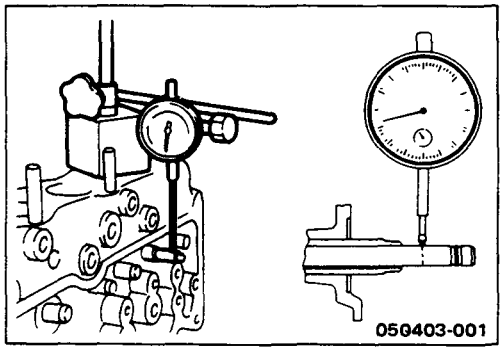

VALVE GUIDE

Valve Stem and Valve Guide Clearance

Measuring Method-I

1. With the valve stem inserted in the valve guide, set the dial indicator needle to "0".
2. Move the valve head from side to side.

   Read the dial indicator.

   Note the highest dial indication.

   If the measured values exceed the specified limit, the valve and the valve guide must be replaced as a set.

Valve Stem Clearance mm(in)

	Standard	Limit
Intake Valve	0.039 – 0.069 (0.0015 – 0.0027)	0.200 (0.008)
Exhaust Valve	0.064 – 0.093 (0.0025 – 0.0037)	0.250 (0.0098)

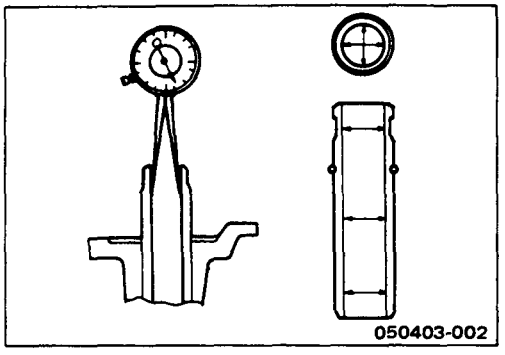

Measuring Method-II

1. Measure the valve stem outside diameter.
   Refer to the Item "Valve Stem Outside Diameter".
2. Use a caliper calibrator or a telescoping gauge to measure the valve guide inside diameter.

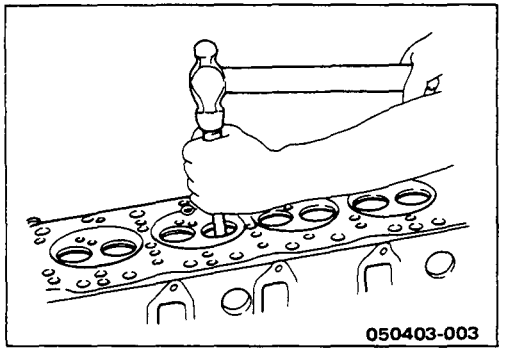

Valve Guide Replacement

Valve Guide Removal

Use a hammer and the valve guide replacer to drive out the valve guide from the cylinder head lower face.

Valve Guide Replacer: 9-8523-1212-0

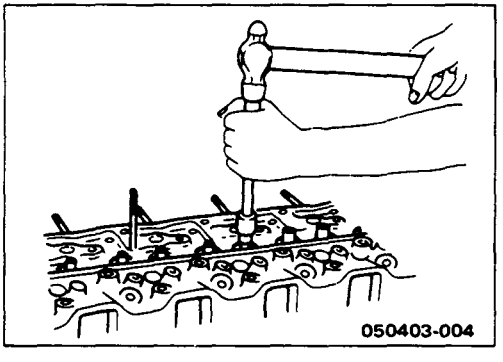

Valve Guide Installation

1. Apply engine oil to the valve guide outer circumference.
2. Attach the valve guide installer to the valve guide.
3. Use a hammer to drive the valve guide into position from the cylinder head upper face.
   Valve Guide Replacer: 9-8523-1212-0

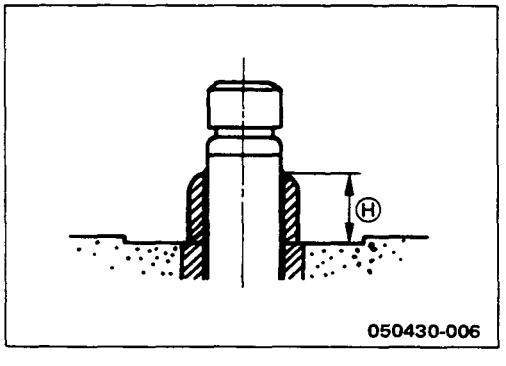

4. Measure the height of the valve guide upper end from the upper face of the cylinder head.

Valve Guide Upper End Height Ⓗ (Reference) mm(in)
13 (0.51)

Note:

If the valve guide has been removed, both the valve and the valve guide must be replaced as a set.

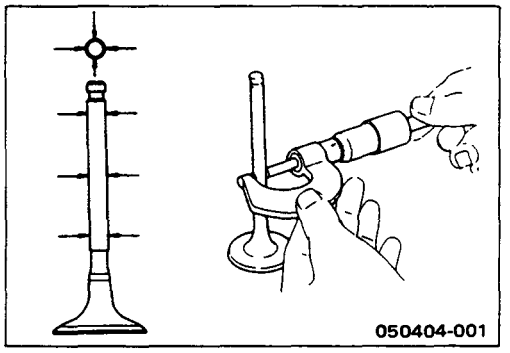

VALVE AND VALVE SEAT INSERT

Valve Stem Outside Diameter

Measure the valve stem diameter at three points.

If the measured value is less than the specified limit, the valve and the valve guide must be replaced as a set.

Valve Stem Outside Diameter mm(in)

	Standard	Limit
Intake Valve	7.946 – 7.961 (0.3128 – 0.3134)	7.880 (0.3102)
Exhaust Valve	7.921 – 7.936 (0.3119 – 0.3124)	7.850 (0.3090)

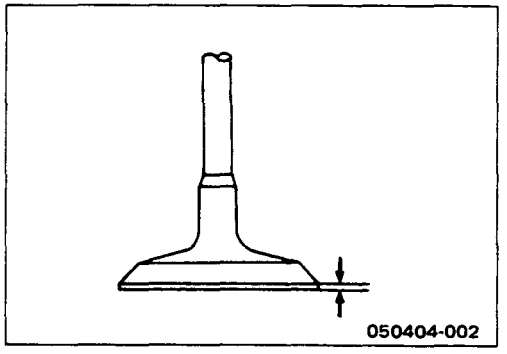

Valve Thickness

Measure the valve thickness.

If the measured value is less than the specified limit, the valve and the valve guide must be replaced as a set.

Intake and Exhaust Valve Thickness mm(in)

Standard	Limit
1.8 (0.07)	1.5 (0.06)

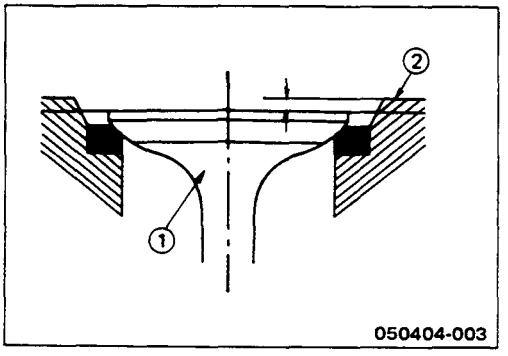

Valve Depression

1. Install the valve ① to the cylinder head ②.
2. Use a depth gauge or a straight edge with steel rule to measure the valve depression from the cylinder head lower surface.

   If the measured value exceeds the specified limit, the valve seat insert must be replaced.

Valve Depression mm(in)

	Standard	Limit
Intake	0.73 (0.029)	1.28 (0.050)
Exhaust	0.70 (0.028)	1.20 (0.047)

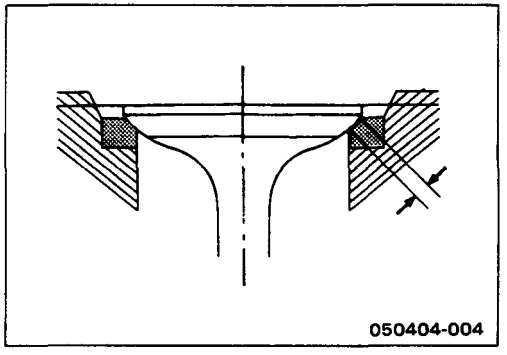

Valve Contact Width

1. Check the valve contact faces for roughness and unevenness. Make smooth the valve contact surfaces.
2. Measure the valve contact width.

   If the measured value exceeds the specified limit, the valve seat insert must be replaced.

Valve Contact Width — mm(in)

	Standard	Limit
Intake	1.7 (0.067)	2.2 (0.087)
Exhaust	2.0 (0.079)	2.5 (0.078)

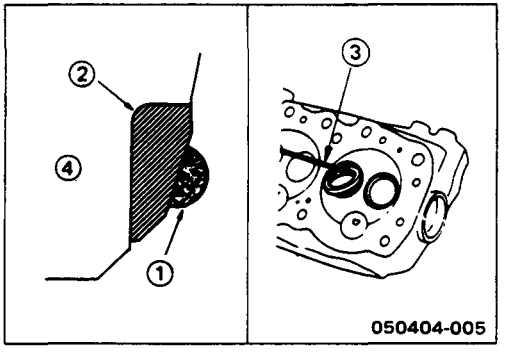

Valve Seat Insert Replacement

Valve Seat Insert Removal

1. Arc weld the entire inside circumference ① of the valve seat insert ②.
2. Allow the valve seat insert to cool for a few minutes.

   This will invite contraction and make removal of the valve seat insert easier.
3. Use a screwdriver ③ to pry the valve seat insert free.

   Take care not to damage the cylinder head ④.
4. Carefully remove carbon and other foreign material from the cylinder head insert bore.

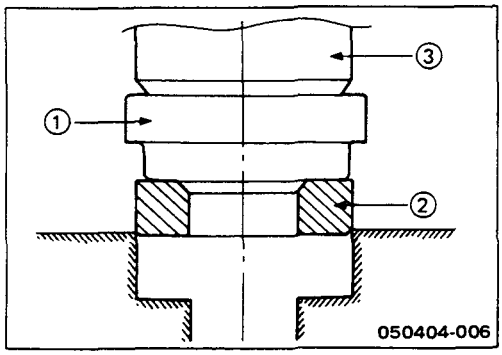

Valve Seat Insert Installation

1. Carefully place the attachment ① (having a smaller outside diameter than the valve seat insert) on the valve seat insert ②.

Note:

The smooth side of the attachment must contact the valve seat insert.

2. Use a bench press ③ to gradually apply pressure to the attachment and press the valve seat insert into place.

Note:

Do not apply an excessive amount of pressure with the bench press. Damage to the valve seat insert will result.

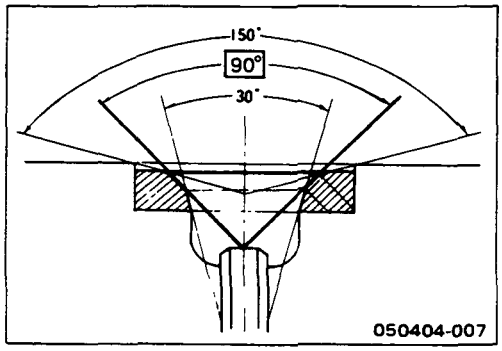

Valve Seat Insert Correction

1. Remove the carbon from the valve seat insert surface.
2. Use a valve cutter (15°, 45°, and 75° blades) to minimize scratches and other rough areas. This will bring the contact width back to the standard value. Remove only the scratches and rough areas. Do not cut away too much. Take care not to cut away unblemished areas of the valve seat surface.

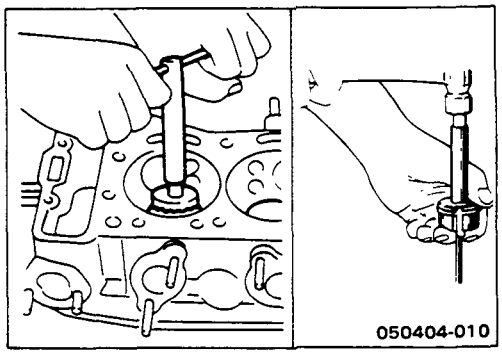

Valve Seat Angle	degree
45	

Note:

Use an adjustable valve cutter pilot.

Do not allow the valve cutter pilot to wobble inside the valve guide.

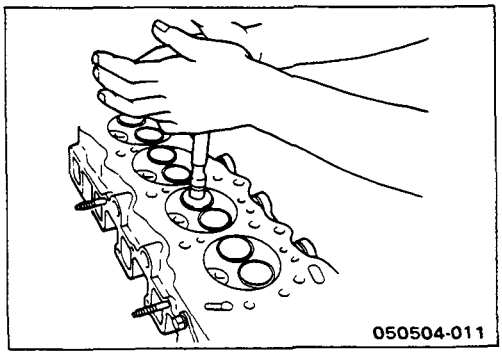

3. Apply abrasive compound to the valve seat insert surface.
4. Insert the valve into the valve guide.
5. Turn the valve while tapping it to fit the valve seat insert.
6. Check that the valve contact width is correct.
7. Check that the valve seat insert surface is in contact with the entire circumference of the valve.

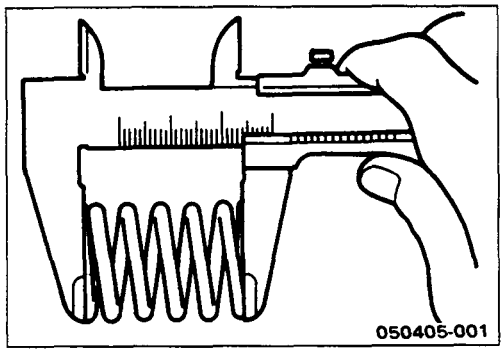

VALVE SPRING

Valve Spring Free Height

Use a vernier caliper to measure the valve spring free height.

If the measured value is less than the specified limit, the valve spring must be replaced.

Inner and Outer Spring Free Height mm(in)

		Standard	Limit
4JA1	Inner spring	45.3 (1.78)	44.4 (1.75)
	Outer spring	49.7 (1.96)	48.2 (1.90)
4JB1T	Single spring	48.0 (1.89)	47.1 (1.85)

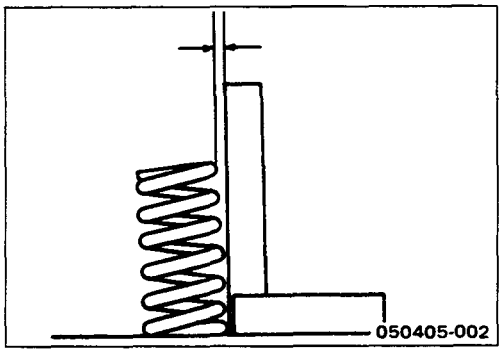

Valve Spring Squareness

Use a surface plate and a square to measure the valve spring squareness.
If the measured value exceeds the specified limit, the valve spring must be replaced.

Inner and Outer Spring Squareness mm(in)

		Limit
4JA1	Inner Spring	3.0 (0.120)
	Outer Spring	3.2 (0.126)
4JB1T	Single Spring	1.7 (0.07)

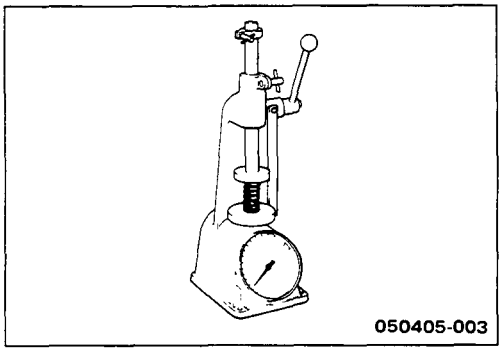

Valve Spring Tension

Use a spring tester to measure the valve spring tension.

If the measured value is less than the specified limit, the valve spring must be replaced.

Valve Spring Tension kg(lb/N)

		Compressed Height	Standard	Limit
4JA1	Inner Spring	37.0 mm (1.46 in)	5.9 (13.0/57.9)	5.0 (11.0/49.0)
	Outer Spring	39.0 mm (1.54 in)	20.9 (46.0/205.0)	18.1 (39.8/177.4)
4JB1T	Single Spring	38.9 mm (1.53 in)	30.2 (66.4/296.0)	26.3 (57.9/257.7)

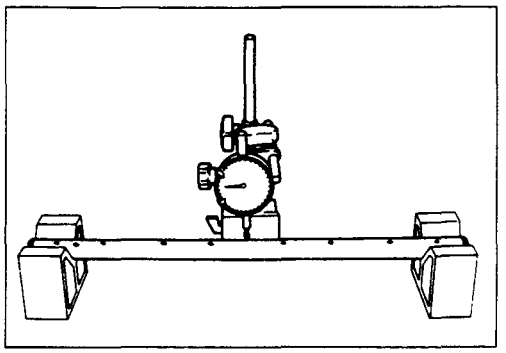

ROCKER ARM SHAFT AND ROCKER ARM

Rocker Arm Shaft Run-Out

1. Place the rocker arm shaft on a V-block.
2. Use a dial indicator to measure the rocker arm shaft central portion run-out.

   If the run-out is very slight, correct the rocker arm shaft run-out with a bench press. The rocker arm must be at cold condition.

   If the measured rocker arm shaft run-out exceeds the specified limit, the rocker arm shaft must be replaced.

Rocker Arm Shaft Run-Out mm(in)

Limit
0.3 (0.012)

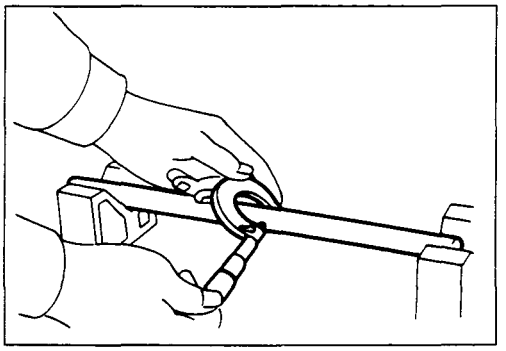

Rocker Arm Shaft Outside Diameter

Use a micrometer to measure the rocker arm fitting portion outside diameter.

If the measured value is less than the specified limit, the rocker arm shaft must be replaced.

Rocker Arm Shaft Outside Diameter mm(in)

Standard	Limit
18.98–19.00 (0.747–0.748)	18.90 (0.744)

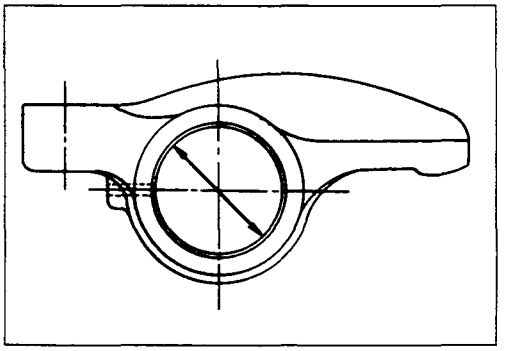

Rocker Arm Shaft and Rocker Arm Clearance

1. Use either a vernier caliper or a dial indicator to measure the rocker arm inside diameter.

Rocker Arm Inside Diameter mm(in)

Standard	Limit
19.036 – 19.060 (0.749 – 0.750)	19.100 (0.752)

2. Measure the rocker arm shaft outside diameter.

   If the measured value exceeds the specified limit, replace either the rocker arm or the rocker arm shaft.

Rocker Arm Shaft and Rocker Arm Clearance mm(in)

Standard	Limit
0.01 – 0.05 (0.0004 – 0.0020)	0.20 (0.008)

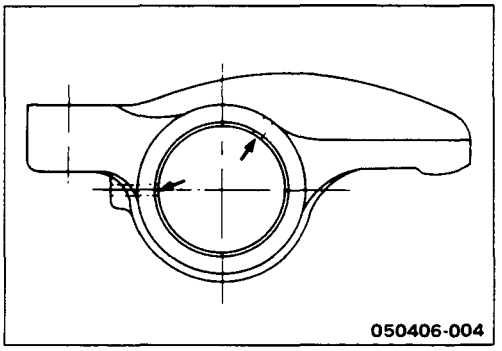

3. Check that the rocker arm oil port is free of obstructions.

   If necessary, use compressed air to clean the rocker arm oil port.

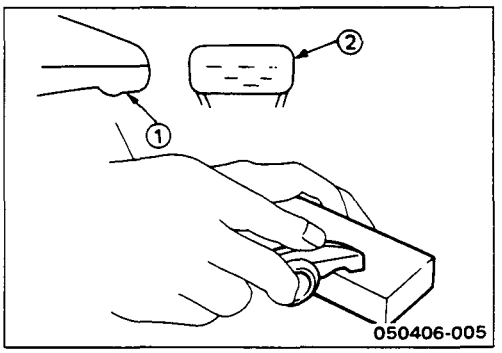

Rocker Arm Correction

Inspect the rocker arm valve stem contact surfaces for step wear ① and scoring ②.

If the contact surfaces have light step wear or scoring, they may be honed with an oil stone.

If the step wear or scoring is severe, the rocker arm must be replaced.

CYLINDER BODY

Cylinder Body Upper Face Warpage

1. Remove the cylinder body dowel.
2. Remove the cylinder liner.

   Refer to "Cylinder Liner Replacement".

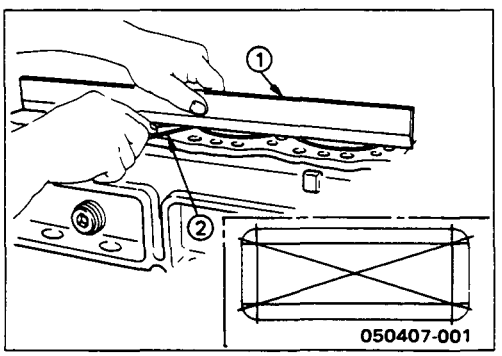

3. Use a straight edge ① and a feeler gauge ② to measure the four sides and the two diagonals of the cylinder body upper face.

   If the measured values exceeds the limit, the cylinder body must be replaced.

Cylinder Body Upper Face Warpage — mm(in)

Standard	Limit
0.05 (0.002) or less	0.20 (0.008)

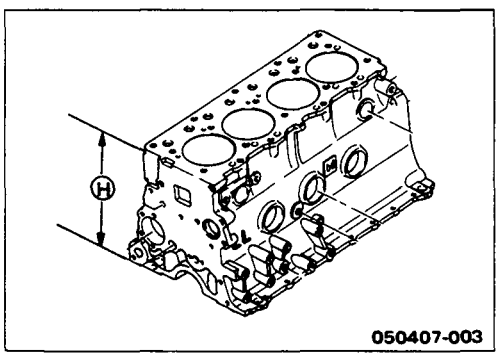

Cylinder Body Height Ⓗ (Reference) — mm(in)

	Standard
4JA1	244.945 – 245.055 (9.6430 – 9.6478)
4JB1T	269.945 – 270.055 (10.6277 – 10.6320)

5. Reinstall the cylinder liner.

   Refer to "Cylinder Liner Replacement".
6. Reinstall the cylinder body dowel.

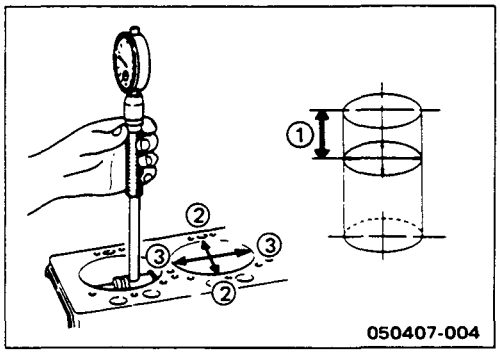

Cylinder Liner Bore Measurement

Use a cylinder indicator to measure the cylinder bore at measuring point ① in the thrust ②–② and axial ③–③ directions of the crankshaft.

Measuring Point ① 20 mm (0.79 in)

If the measured value exceeds the specified limit, the cylinder liner must be replaced.

Cylinder Liner Bore mm(in)

Standard	Limit
93.021 (3.662)	93.100 (3.665)

Note:

The inside of the dry type cylinder liner is chrome plated. It cannot be rebored or honed.

If the inside of the cylinder liner is scored or scorched, the cylinder liner must be replaced.

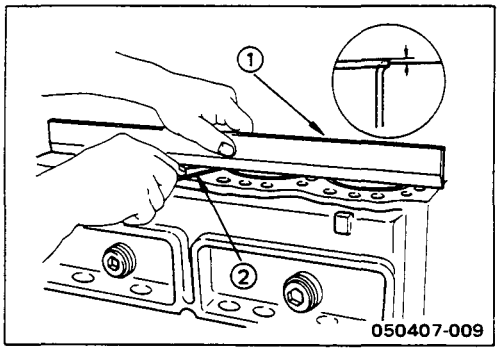

Cylinder Liner Projection Inspection

1. Hold a straight edge ① along the top edge of the cylinder liner to be measured.
2. Use a feeler gauge ② to measure each cylinder liner projection.

Cylinder Liner Projection mm(in)

Standard
0 – 0.1 (0 – 0.004)

The difference in the cylinder liner projection height between any two adjacent cylinders must not exceed 0.03 mm (0.0012 in).

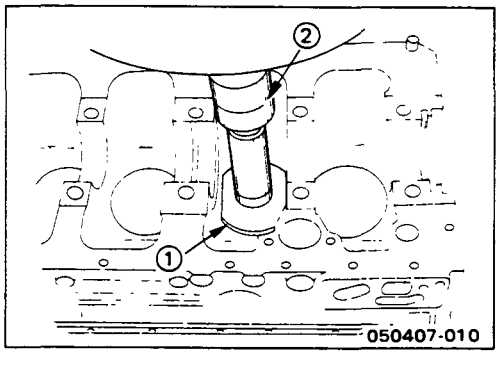

Cylinder Liner Replacement

Cylinder Liner Removal

1. Insert the cylinder liner remover ① into the cylinder body (from the lower side of the cylinder body) until it makes firm contact with the cylinder liner.

   Cylinder Liner Remover: 5-8840-2039-0

2. Use a bench press ② to slowly force the cylinder liner from the cylinder body.

Note:

Take care not to damage the cylinder body upper face during the cylinder liner removal procedure.

3. Measure the cylinder body upper face warpage.
   Refer to "Cylinder Body Upper Face Warpage".

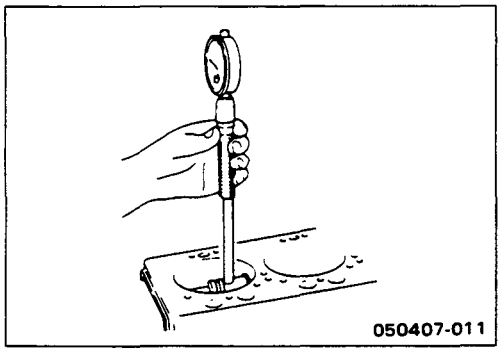

Cylinder Liner Grade Selection

Subtract the average cylinder body bore from the average cylinder liner outside diameter to obtain the fitting interference.

Fitting Interference mm(in)

Standard
−0.010* – 0.019 (−0.0004* – 0.0007)

* A minus (−) value indicates that the cylinder bore is larger than the linder outside diameter.

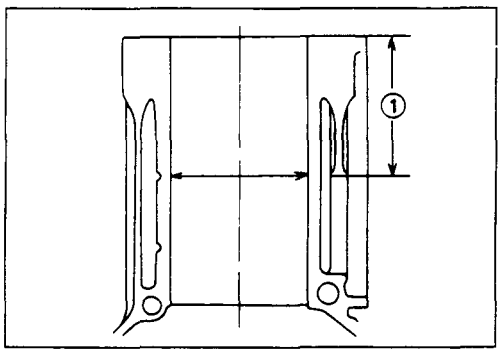

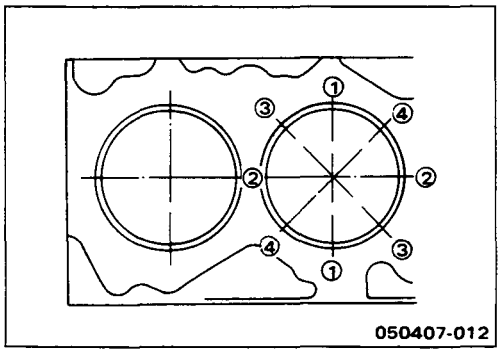

Cylinder Body Bore Measurement

1. Take measurements at measuring point ① across positions ①–①, ②–②, ③–③, and ④–④.

Measuring Point ① 98 mm (3.86 in)

2. Calculate the average value of the four measurements to determine the correct cylinder grade.
3. Consult the following table with the resultant diameter for the correct liner application.

Selection

Liner Grade Size	2	3
Cyl. Bore	95.001 – 95.020	95.021 – 95.040

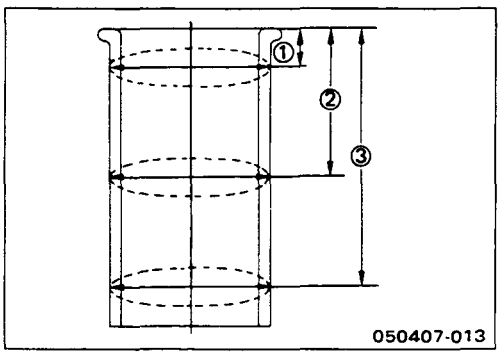

Cylinder Liner Outside Diameter Measurement

1. Take two measurements at measuring points ①, ②, and ③.

Measuring Point ① 20 mm (0.79 in) all 4J models

Measuring Point ② 80 mm (3.15 in) 4JA1
90 mm (3.54 in) 4JB1T

Measuring Point ③ 140 mm (5.50 in) 4JA1
160 mm (6.30 in) 4JB1T

2. Calculate the average value of the six measurements to determine the correct cylinder liner grade.

Cylinder Bore and Cylinder Liner Outside Diameter Combination

(Reference) mm(in)

Liner Grade	Cylinder Bore	Cylinder Liner Outside Diameter
1.	95.001 – 95.010 (3.74019 – 3.74054)	95.011 – 95.020 (3.74058 – 3.74094)
2.	95.011 – 95.020 (3.74058 – 3.74094)	95.021 – 95.030 (3.74098 – 3.74133)
3.	95.021 – 95.030 (3.74098 – 3.74133)	95.031 – 95.040 (3.74137 – 3.74172)
4.	95.031 – 95.040 (3.74137 – 3.74172)	95.041 – 95.050 (3.74176 – 3.74212)

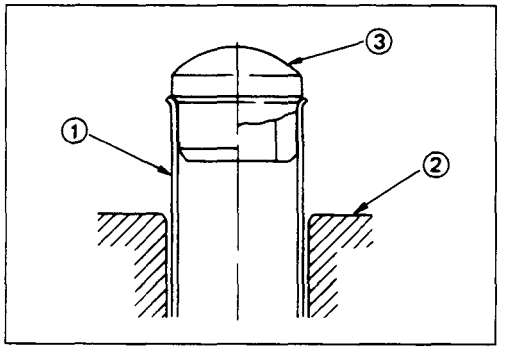

Cylinder Liner Installation

1. Cylinder Liner Installation Using The Special Tool
   1) Use new kerosene or diesel oil to thoroughly clean the cylinder liners and bores.
   2) Use compressed air to blow-dry the cylinder liner and bore surfaces.

Note:

All foreign material must be carefully removed from the cylinder liner and the cylinder bore before installation.

   3) Insert the cylinder liner ① into the cylinder body ② from the top of the cylinder body.

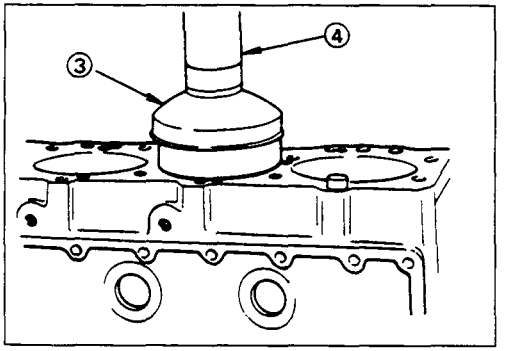

   4) Set the cylinder liner installer ③ to the top of the cylinder liner.

      Cylinder Liner Installer: 5-8840-2040-0

   5) ③ is directly beneath the bench press shaft center ④.

Note:

Check that the cylinder liner is set perpendicular to the bench press and that there is no wobble.

   6) Use the bench press to apply a seating force of 500 kg (1,100 lb/4,900 N) to the cylinder liner.
   7) Apply a force of 2,500 kg (5,500 lb/24,500 N) to fully seat the cylinder liner.
   8) After installing the cylinder liner, measure the cylinder liner projection.

      Refer to "Cylinder Liner Projection Inspection".

2. Cylinder Liner Installation Using Dry Ice

   Cylinder liner is a chrome plated dry type, it is advisable to use dry ice during the installation procedure.

   Cooling the cylinder liner with dry ice will cause the cylinder liner to contract, thus making installation easier.

Note:

It is important that the cylinder liner be inserted to the cylinder body immediately after it has been cooled.

Warning:

Dry ice must be used with great care. Careless handling of dry ice can result in severe frostbite.

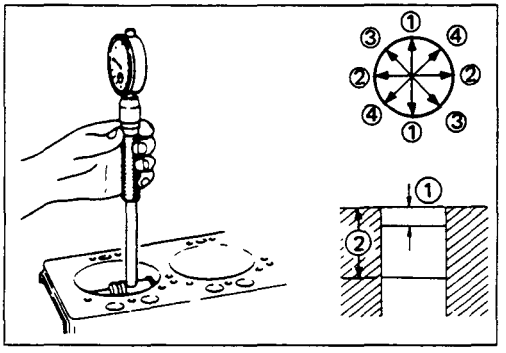

Piston Grade Selection

Measure the cylinder liner bore after installing the cylinder liner. Then select the appropriate piston grade for the installed cylinder liner.

1. Measure the cylinder liner bore.

   Refer to "Cylinder Liner Bore Measurement".

Measuring Points ① 20 mm (0.8 in) for 4JA1 and 4JB1T
② 140 mm (5.5 in) for 4JA1
② 160 mm (6.3 in) for 4JB1T

Cylinder Liner Bore mm(in)

Standard	Limit
93.021 – 93.060 (3.6622 – 3.6638)	93.100 (3.6653)

Note:

It is most important that the correct piston grade be used. Failure to select the correct piston grade will result in engine failure. Always measure the cylinder bore and select the correct piston grade.

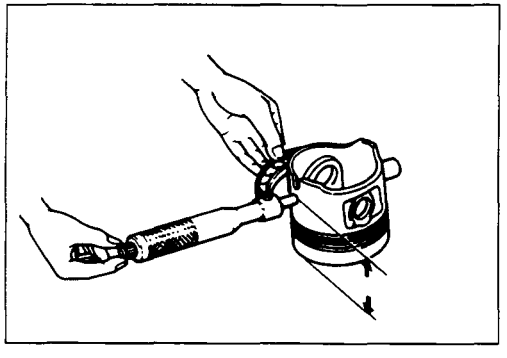

2. Measure the piston diameter.

Piston Measuring Point : 70 mm (3.1 in) for 4JA1
74 mm (2.9 in) for 4JB1T

Piston Grade mm(in)

Grade	Size
Ⓐ	92.985 – 93.004 (3.6608 – 3.6615)
Ⓒ	93.005 – 93.024 (3.6616 – 3.6623)

Cylinder Liner and Piston Clearance mm(in)

0.025 – 0.045 (0.0010 – 0.0018)

Note:

Cylinder liner kit clearances are preset. However, the cylinder liner installation procedure may result in slight decreases in cylinder liner clearances. Always measure the cylinder liner clearance after installation to be sure that it is correct.

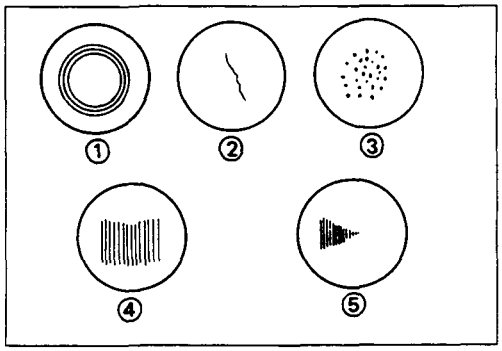

TAPPET AND PUSH ROD

Visually inspect the tappet contact surfaces for pitting, cracking, and other abnormal conditions. The tappet must be replaced if any of these conditions are present.

Refer to the illustration at the left.

① Normal contact
② Cracking
③ Pitting
④ Irregular contact Uneven contact
⑤ Irregular contact One-sided contact

Note:

The tappet surfaces are spherical. Do not attempt to grind them with an oil stone or similar tool in an effort to repair the tappet. If the tappet is damaged, it must be replaced.

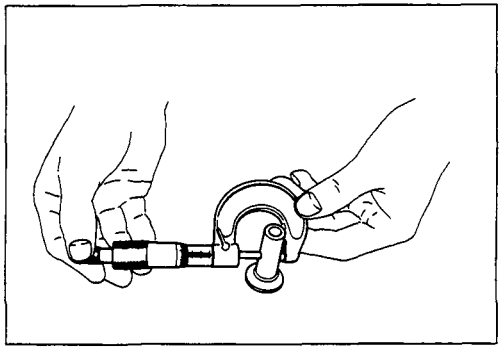

Tappet Outside Diameter

Measure the tappet outside diameter with a micrometer. If the measured value is less than the specified limit, the tappet must be replaced.

Tappet Outside Diameter — mm(in)

Standard	Limit
12.97 – 12.99 (0.510 – 0.511)	12.95 (0.510)

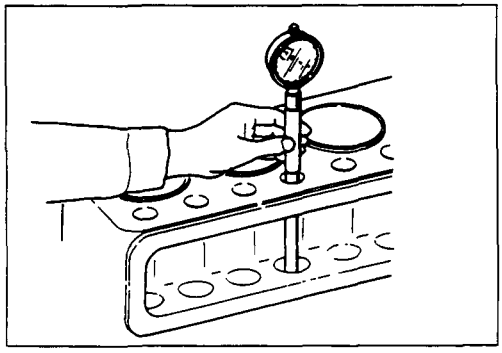

Tappet and Cylinder Body Clearance — mm(in)

Standard	Limit
0.03 (0.001)	0.10 (0.004)

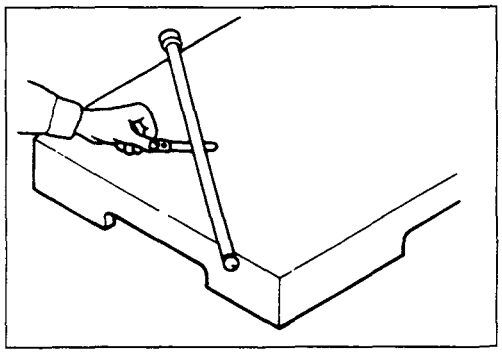

Push Rod Curvature

1. Lay the push rod on a surface plate.
2. Roll the push rod along the surface plate and measure the push rod curvature with a thickness gauge.

   If the measured value exceeds the specified limit, the push rod must be replaced.

Pushrod Curvature — mm(in)

Limit
0.3 (0.012)

3. Visually inspect both ends of the push rod for excessive wear and damage. The push rod must be replaced if these conditions are discovered during inspection.

CAMSHAFT

Visually inspect the journals, the cams, the oil pump drive gear, and the camshaft bearings for excessive wear and damage. The camshaft and the camshaft bearings must be replaced if these conditions are discovered during inspection.

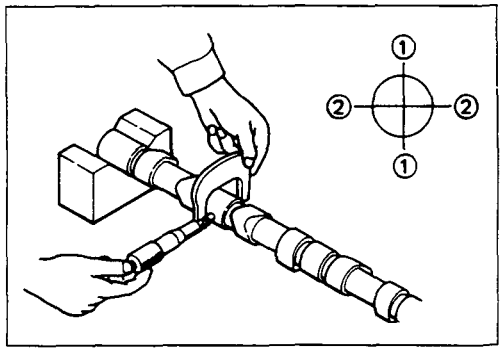

Camshaft Journal Diameter

Use a micrometer to measure each camshaft journal diameter in two directions (① and ②). If the measured value is less than the specified limit, the camshaft must be replaced.

Camshaft Journal Diameter — mm(in)

Standard	Limit
49.945 – 49.975 (1.9663 – 1.9675)	49.60 (1.953)

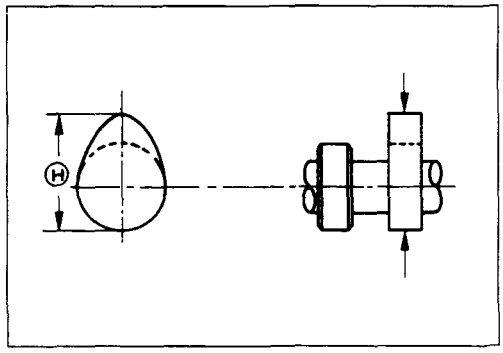

Cam Height

Measure the cam height Ⓗ with a micrometer. If the measured value is less than the specified limit, the camshaft must be replaced.

Cam Height Ⓗ — mm(in)

Standard	Limit
42.08 (1.657)	41.65 (1.640)

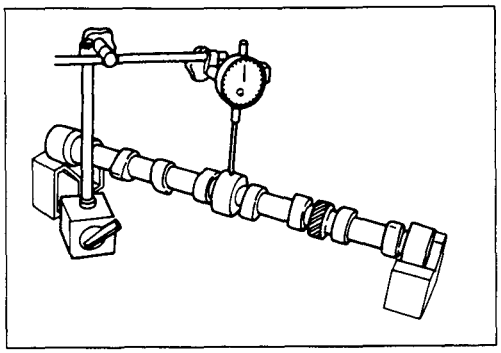

Camshaft Run-Out

1. Mount the camshaft on V-blocks.
2. Measure the run-out with a dial indicator.

   If the measured value exceeds the specified limit, the camshaft must be replaced.

Camshaft Run-Out mm(in)

Standard	Limit
0.02 (0.0008)	0.10 (0.004)

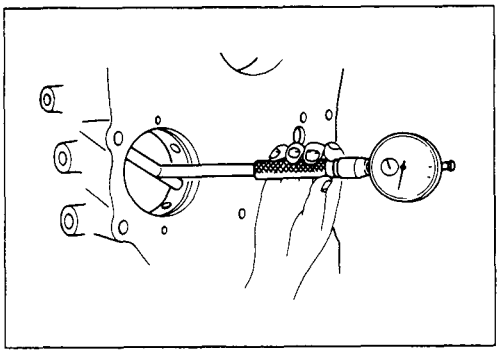

Camshaft and Camshaft Bearing Clearance

Use an inside dial indicator to measure the camshaft bearing inside diameter.

Crankshaft Bearing Inside Diameter mm(in)

Standard	Limit
50.00 – 50.03 (1.968 – 1.970)	50.08 (1.972)

If the clearance between the camshaft bearing inside diameter and the journal exceeds the specified limit, the camshaft bearing must be replaced.

Camshaft Bearing Clearance mm(in)

Standard	Limit
0.05 (0.002)	0.12 (0.005)

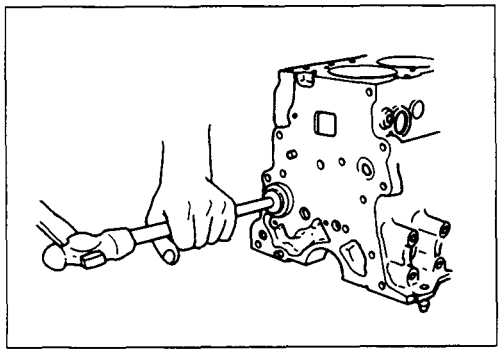

Camshaft Bearing Replacement

Camshaft Bearing Removal

1. Remove the cylinder body plug plate.
2. Use the bearing replacer to remove the camshaft bearing.

   Bearing Replacer: 5-8840-2038-0

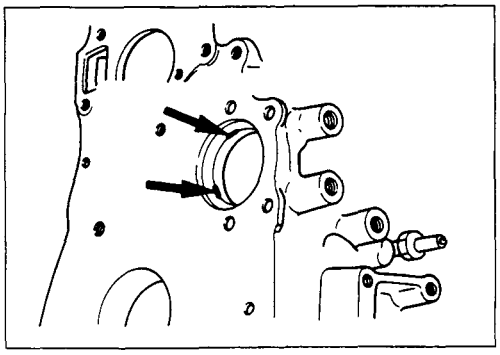

Camshaft Bearing Installation

1. Align the bearing oil holes with the cylinder body oil holes.
2. Use the replacer to install the camshaft bearing.

   Bearing Replacer: 5-8840-2038-0

CRANKSHAFT AND BEARING

Inspect the surface of the crankshaft journals and crankpins for excessive wear and damage.

Inspect the oil seal fitting surfaces for excessive wear and damage.

Inspect the oil ports for obstructions.

Note:

To increase crankshaft strength, tufftriding (Nitrizing Treatment) has been applied. Because of this, it is not possible to regrind the crankshaft surfaces.

Therefore, under size bearing are not available.

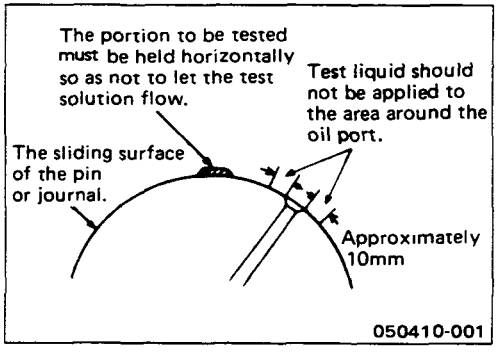

Crankshaft Tufftriding Inspection

1. Use an organic cleaner to thoroughly clean the crankshaft. There must be no traces of oil on the surfaces to be inspected.
2. Prepare a 5 — 10% solution of ammonium cuprous chloride (dissolved in distilled water).
3. Use a syringe to apply the solution to the surface to be inspected.

   Hold the surface to be inspected perfectly horizontal to prevent the solution from running.

Note:

Do not allow the solution to come in contact with the oil ports and their surrounding area.

Judgment

1. Wait for thirty to forty seconds.

   If there is no discoloration after thirty or forty seconds, the crankshaft is usable.

   If discoloration appears (the surface being tested will become the color of copper), the crankshaft must be replaced.
2. Steam clean the crankshaft surface immediately after completing the test.

Note:

The ammonium cuprous chloride solution is highly corrosive. Because of this, it is imperative that the surfaces being tested be cleaned immediately after completing the test.

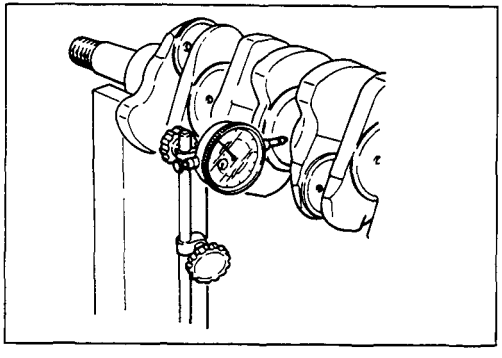

Crankshaft Run-Out

1. Set a dial indicator to the center of the crankshaft journal.
2. Gently turn the crankshaft in the normal direction of rotation.

   Read the dial indicator as you turn the crankshaft.

   If the measured value exceeds the specified limit, the crankshaft must be replaced.

Crankshaft Run-Out mm(in)

Standard	Limit
0.05 (0.002) or less	0.08 (0.003)

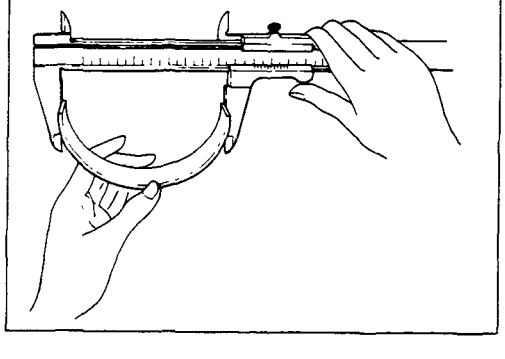

Bearing Spread

Use a vernier caliper to measure the bearing spread.

If the measured value is less than the specified limit, the bearing must be replaced.

Bearing Spread mm(in)

	Limit	
Crankshaft Bearing	4JA1	64.5 (2.54)
	4JB1T	74.5 (2.93)
Connecting Rod Bearing	56.5 (2.22)	

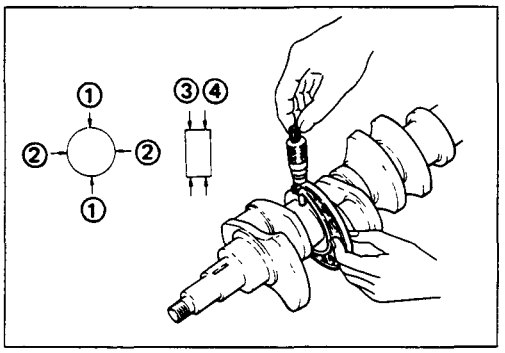

Crankshaft Journal and Crankpin Diameter

1. Use a micrometer to measure the crankshaft journal diameter across points ① – ① and ② – ②.
2. Use the micrometer to measure the crankshaft journal diameter at the two points (③ and ④).
3. Repeat Steps ① and ② to measure the crankpin diameter.

   If the measured values are less than the specified limit, the crankshaft must be replaced.

Crankshaft Journal Diameter — mm(in)

	Standard	Limit
4JA1	59.92 – 59.93 (2.3591 – 2.3594)	59.91 (2.3586)
4JB1T	69.92 – 69.93 (2.7527 – 2.7531)	69.91 (2.7524)

Crankpin Diameter — mm(in)

Standard	Limit
52.92 – 52.93 (2.0833 – 2.0839)	52.90 (2.083)

Crankshaft Journal and Crankpin Uneven Wear — mm(in)

Standard	Limit
0.05 (0.002) or less	0.08 (0.003)

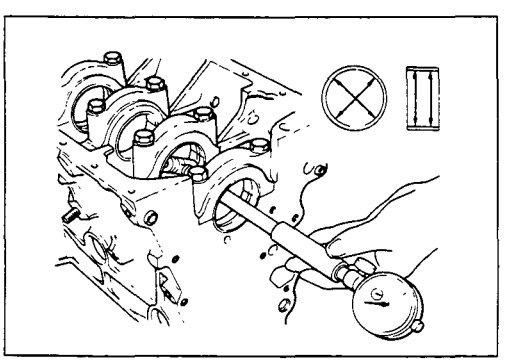

Crankshaft Journal and Bearing Clearance

If the clearance between the measured bearing inside diameter and the crankshaft journal diameter exceeds the specified limit, the bearing and/or the crankshaft must be replaced.

Crankshaft Journal and Bearing Clearance — mm(in)

Standard	Limit
0.031 – 0.064 (0.0012 – 0.0025)	0.110 (0.0043)

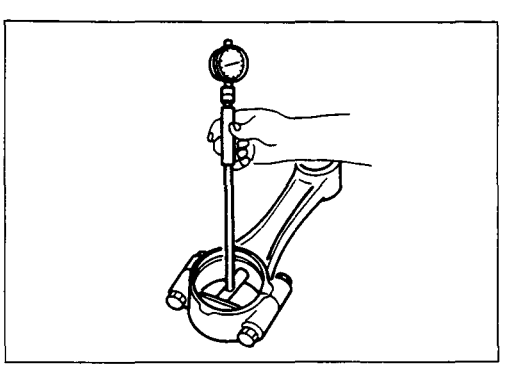

Connecting Rod Bearing Inside Diameter

1. Install the bearing to the connecting rod big end.
2. Tighten the bearing cap to the specified torque.

Connecting Rod Bearing Cap Bolt Torque — kg·m(lb.ft/N·m)

8.5 ± 0.5 (61.5 ± 3.6/83.40 ± 4.90)

3. Use an inside dial indicator to measure the connecting rod bearing inside diameter.

Crankpin and Bearing Clearance

If the clearance between the measured bearing inside diameter and the crankpin exceeds the specified limit, the bearing and/or the crankshaft must be replaced.

Crankpin and Bearing Clearance mm(in)

Standard	Limit
0.029 — 0.066 (0.0011 — 0.0026)	0.100 (0.0039)

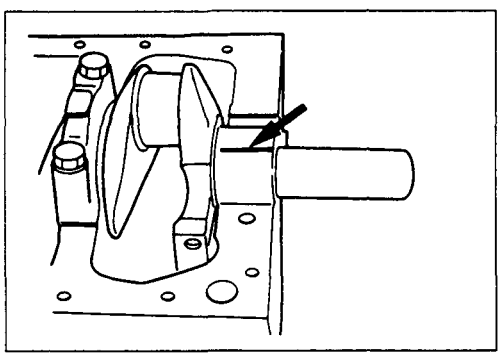

Clearance Measurements (With Plastigage)

Crankshaft Journal and Bearing Clearance

1. Clean the cylinder body, the journal bearing fitting surface, the bearing caps, and the bearings.
2. Install the bearings to the cylinder body.
3. Carefully place the crankshaft on the bearings.
4. Rotate the crankshaft approximately 30° to seat the bearing.
5. Place the Plastigage (arrow) over the crankshaft journal across the full width of the bearing.
6. Install the bearing caps with the bearing.

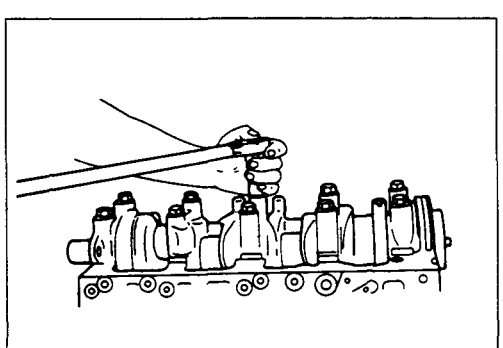

7. Tighten the bearing caps to the specified torque.

Crankshaft Bearing Cap Bolt Torque kg·m(lb.ft/N·m)

17 ± 1 (123.0 ± 7.2/166.7 ± 9.8)

Do not allow the crankshaft to turn during bearing cap installation and tightening.

8. Remove the bearing cap.

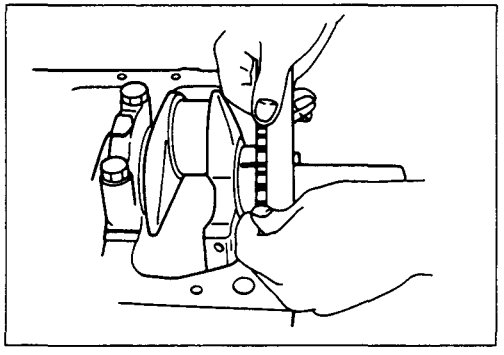

9. Compare the width of the Plastigage attached to either the crankshaft or the bearing against the scale printed on the Plastigage container.

   If the measured value exceeds the limit, perform the following additional steps.

   1) Use a micrometer to measure the crankshaft outside diameter.
   2) Use an inside dial indicator to measure the bearing inside diameter.

      If the crankshaft journal and bearing clearance exceeds the limit, the crankshaft and/or the bearing must be replaced.

Crankshaft Journal and Bearing Clearance mm(in)

Standard	Limit
0.031 – 0.064 (0.0012 – 0.0025)	0.110 (0.0043)

Crankpin and Bearing Clearance

1. Clean the crankshaft, the connecting rod, the bearing cap, and the bearings.
2. Install the bearing to the connecting rod and the bearing cap.
   Do not allow the crankshaft to move when installing the bearing cap.
3. Prevent the connecting rod from moving.
4. Attach the Plastigage to the crankpin.
   Apply engine oil to the Plastigage to keep it from falling.
5. Install the bearing cap and tighten it to the specified torque.
   Do not allow the connecting rod to move when installing and tightening the bearing cap.

Connecting Rod Bearing Cap Bolt Torque kg·m(lb.ft/N·m)

8.5 ± 0.5 (61.5 ± 3.6/83.35 ± 4.90)

6. Remove the bearing cap.
7. Compare the width of the Plastigage attached to either the crankshaft or the bearing against the scale printed on the Plastigage container.
   If the measured value exceeds the specified limit, perform the following additional steps.
   1) Use a micrometer to measure the crankpin outside diameter.
   2) Use an inside dial indicator to measure the bearing inside diameter.
      If the crank pin and bearing clearance exceeds the specified limit, the crankshaft and/or the bearing must be replaced.

Crankpin and Bearing Clearance mm(in)

Standard	Limit
0.029 – 0.066 (0.0011 – 0.0026)	0.100 (0.0039)

CRANKSHAFT BEARING SELECTION

Crankshaft bearing selection is based on the measured diameters of the crankshaft journals and the bearing inserts.

Match the crankshaft bearing housing grade marks and the crankshaft journal grade marks in the table below to determine the correct crankshaft bearing size.

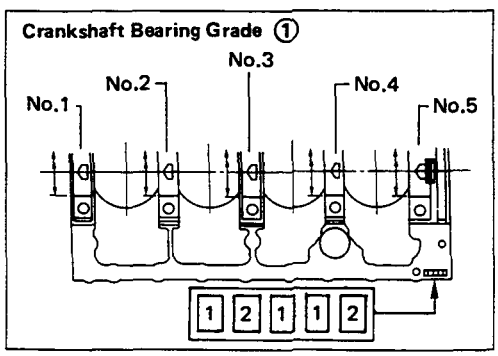

Crankshaft Bearing Housing Grade Mark Position

Crankshaft bearing housing grade marks [1] or [2] are stamped on the rear right hand side of the cylinder body.

Example:

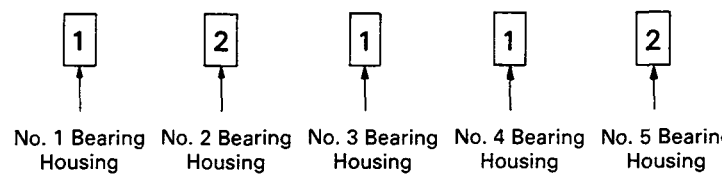

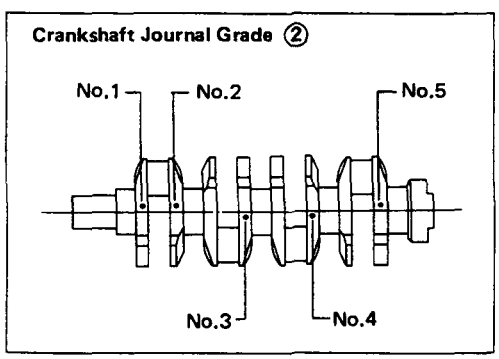

Crankshaft Journal Grade Mark Position

The crankshaft journal grade marks (1 or –) are stamped on each crankshaft journal wave.

The crankshaft journal and bearing clearance must be the same for each position after installation of the crankshaft and the crankshaft bearings.

Crankshaft Bearing Size Color ③

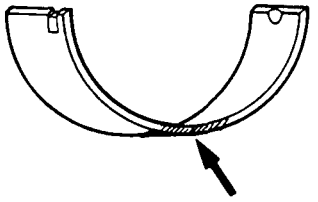

REFERENCE

4JA1 ENGINE

mm(in)

Crankshaft Bearing ①		Crankshaft Journal ②		Crankshaft Bearing Size Color Code ③
Grade Mark	Diameter	Grade Mark	Diameter	
1	63.987-64.000 (2.5191-2.6196)	1 or —	59.927–59.932 (2.3593-2.3595)	Black
		2 or — —	59.922-59.927 (2.3591-2.3593)	Blue
		3 or — — —	59.917-59.922 (2.3589-2.3591)	
2	63.975-63.987 (2.5186-2.5191)	1 or —	59.927–59.932 (2.3593-2.3595)	Green
		2 or — —	59.922-59.927 (2.3591-2.3593)	
		3 or — — —	59.917-59.922 (2.3589-2.3591)	Black

4JB1T ENGINE

mm(in)

Crankshaft Bearing ①		Crankshaft Journal ②		Crankshaft Bearing Size Color Code ③
Grade Mark	Diameter	Grade Mark	Diameter	
1	73.987-74.000 (2.9129-2.9134)	1 or —	69.927–69.932 (2.7530-2.7532)	Black
		2 or — —	69.922-69.927 (2.7528-2.7530)	Blue
		3 or — — —	69.917-69.922 (2.7556-2.7528)	
2	73.975-73.987 (2.9124-2.9129)	1 or —	69.927–69.932 (2.7530-2.7532)	Green
		2 or — —	69.922-69.927 (2.7528-2.7530)	
		3 or — — —	69.917-69.922 (2.7556-2.7528)	Black

CRANKSHAFT PILOT BEARING

Check the crankshaft pilot bearing for excessive wear and damage and replace it if necessary.

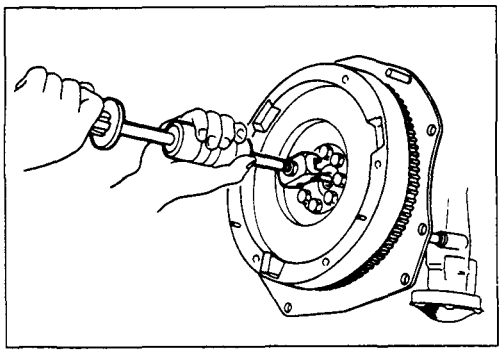

Crankshaft Pilot Bearing Replacement

Crankshaft Pilot Bearing Removal

Use the pilot bearing remover to remove the crankshaft pilot bearing.

Pilot Bearing Remover: 5-8840-2000-0
Sliding Hammer: 5-8840-0019-0 (J-23907)

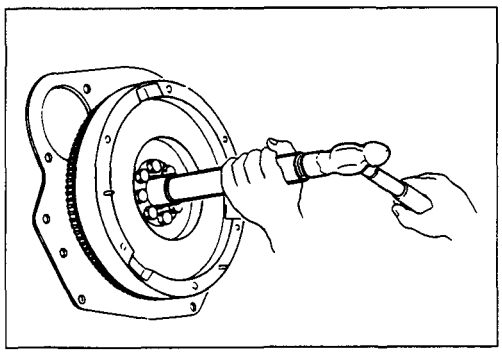

Crankshaft Pilot Bearing Installation

1. Place the crankshaft pilot bearing right angle across the crankshaft bearing installation hole.
2. Tap around the edges of the crankshaft pilot bearing outer races with a brass hammer to drive the bearing into the crankshaft bearing installation hole.

   Pilot Bearing Installer: 5-8522-0024-0

Note:

Strike only the crankshaft pilot bearing outer race with the hammer. Do not strike the bearing inner race. Bearing damage and reduced bearing service life will result.

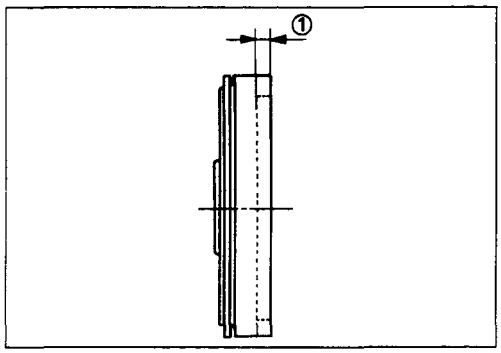

FLYWHEEL AND RING GEAR

Flywheel

1. Inspect the flywheel friction surface for excessive wear and heat cracks.
2. Measure the flywheel friction surface depth.

   If the measured value is within the specified limit, the flywheel may be reground.

   If the measured value exceeds the specified limit, the flywheel must be replaced.

Flywheel Friction Surface Depth ① mm(in)

	Standard	Limit
4JA1	20 (0.787)	21 (0.827)
4JB1T	14 (0.551)	15 (0.591)

Flywheel Friction Surface Roughness mm(in)

Less than 0.006 (0.00024)

Ring Gear

Inspect the ring gear.

If the ring gear teeth are broken or excessively worn, the ring gear must be replaced.

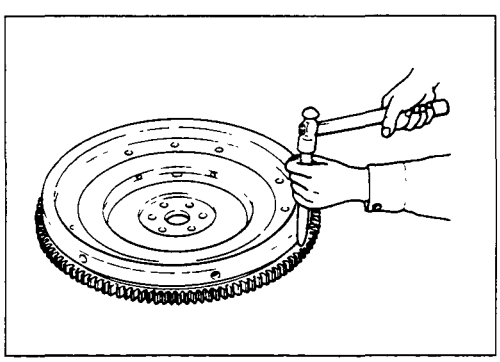

Ring Gear Replacement

Ring Gear Removal

Strike around the edges of the ring gear with a hammer and chisel to remove it.

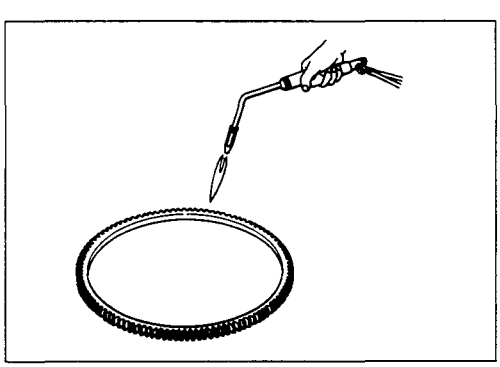

Ring Gear Installation

1. Heat the ring gear evenly with a gas burner to invite thermal expansion.

   Do not allow the temperature of the gas burner to exceed 200°C (390°F).
2. Install the ring gear when it is sufficiently heated.

   The ring gear must be installed with the chamfer facing the clutch.

PISTON

Piston Grade Selection and Cylinder Bore Measurement

Refer to the Section "CYLINDER BODY", Item "Cylinder Liner Bore Measurement" for details on piston grade selection and cylinder liner bore measurement.

PISTON RING

Piston Ring Gap

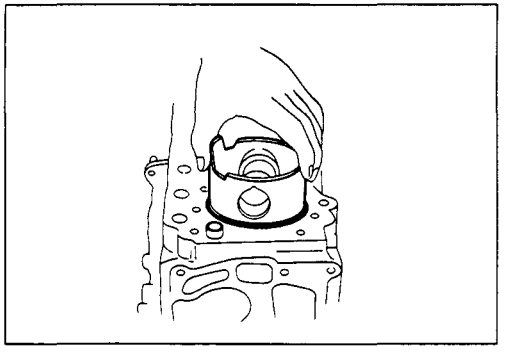

1. Insert the piston ring horizontally (in the position it would assume if it were installed to the piston) into the cylinder liner.

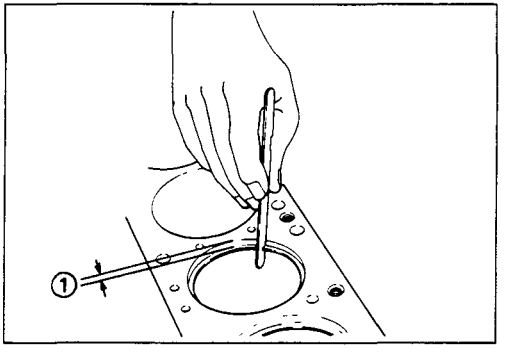

2. Push the piston ring into the cylinder bore until it reaches the measuring point ① or ② where the cylinder liner bore is the smallest.

   Do not allow the piston ring to slant to one side or the other. It must be perfectly horizontal.

   Measuring Point ① 10 mm (0.4 in)
   or
   Measuring Point ② 120 mm (4.7 in)

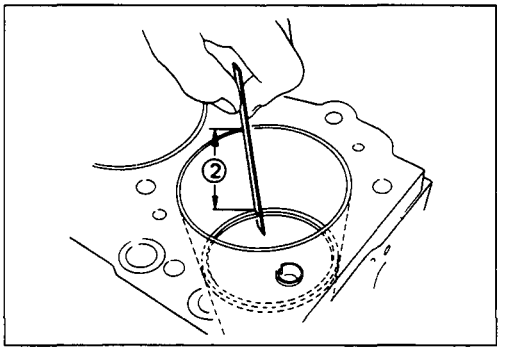

3. Use a feeler gauge to measure the piston ring gap.

   If the measured value exceeds the specified limit, the piston ring must be replaced.

Piston Ring Gap — mm(in)

	Standard	Limit
1st Compression Ring	0.2 – 0.4 (0.008 – 0.016)	1.5 (0.059)
2nd Compression Ring		
Oil Ring	0.1 – 0.3 (0.004 – 0.012)	

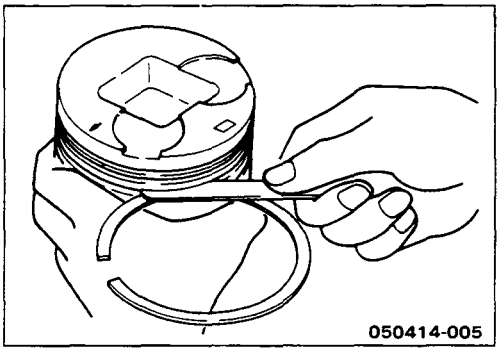

Piston Ring and Piston Ring Groove Clearance

Use a feeler gauge to measure the clearance between the piston ring and the piston ring groove at several points around the piston.

If the clearance between the piston ring and the piston ring groove exceeds the specified limit, the piston ring must be replaced.

Piston Ring and Piston Ring Groove Clearance — mm(in)

	Standard	Limit
1st Compression Ring	0.09–0.125 (0.0035–0.0049)	0.150 (0.006)
2nd Compression Ring	0.05–0.075 (0.002–0.003)	
Oil Ring	0.03–0.070 (0.0012–0.0028)	

4. Visually inspect the piston rings.

   If a piston ring groove is damaged or distorted, the piston must be replaced.

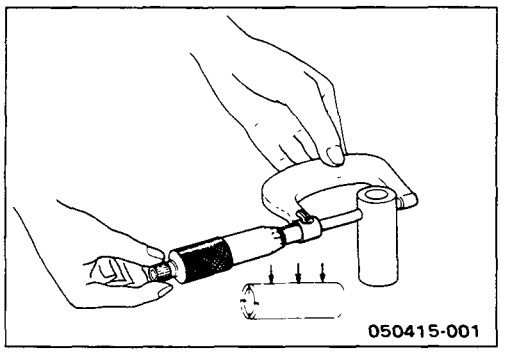

PISTON PIN

Piston Pin Diameter

Use a micrometer to measure the piston pin diameter at several points.

If the measured value is less than the specified limit, the piston pin must be replaced.

Piston Pin Diameter — mm(in)

	Standard	Limit
4JA1	30.995 – 31.000 (1.2202 – 1.2204)	30.97 (1.219)
4JB1T	33.994 – 34.000 (1.3383 – 1.3386)	33.97 (1.337)

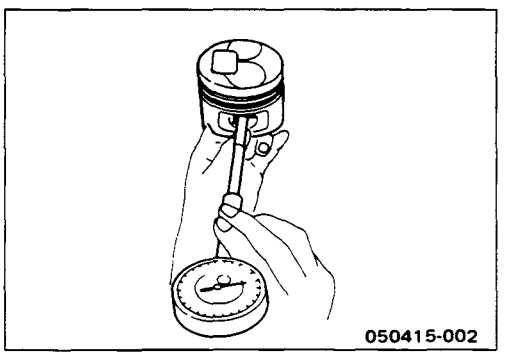

Piston Pin and Piston Clearance

Use an inside dial indicator to measure the piston pin hole (in the piston).

Piston Pin Hole — mm(in)

	Standard
4JA1	31.002 – 31.010 (1.2206 – 1.2208)
4JB1T	34.002 – 34.010 (1.3387 – 1.3390) (1.3383 – 1.3386)

Piston Pin and Piston Pin Hole Clearance — mm(in)

0.002 – 0.015 (0.00008 – 0.0006)

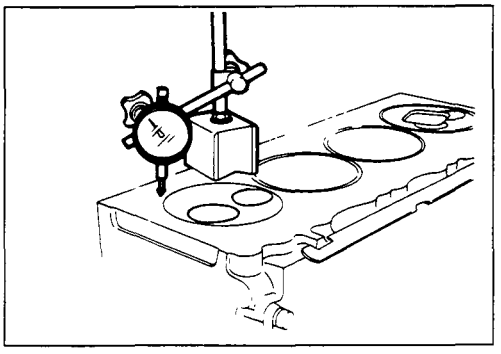

CYLINDER HEAD GASKET SELECTION

Cylinder head gasket is determined by the piston head projection from the cylinder body upper surface, in order to improve engine performance.
Three types of gasket are provided by the difference of thickness. Select the adequet one out of three grades of gasket, according to the following procedure.
Before measurement, clear off carbon from the piston head and cylinder body surface and also clean the place where a gasket was installed.

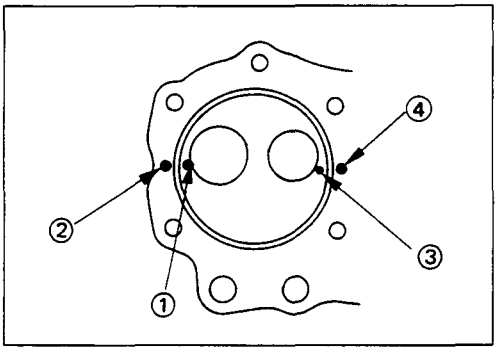

Piston Head Projection Measuring Point

1. Use a dial indicator to measure the piston projection amount.
2. Refer to the illustration for the piston head projection measuring positions.

   All measuring positions should be as close as possible to the cylinder liner.

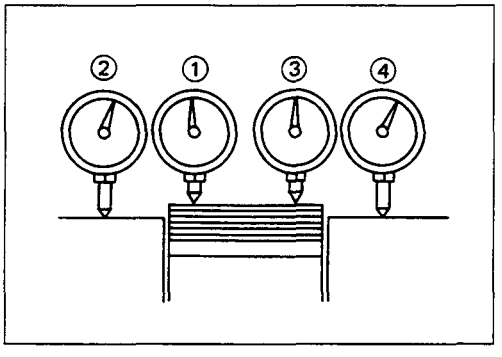

3. Measure the points ① ② ③ ④ and obtain two differences ①-② and ③-④ on each cylinder.
   Calculate the average value of the piston head projection on each cylinder.
4. Obtain the maximum value in the four cylinders.
5. Determine the gasket grade required to the maximum value described above in accordance with the following table.

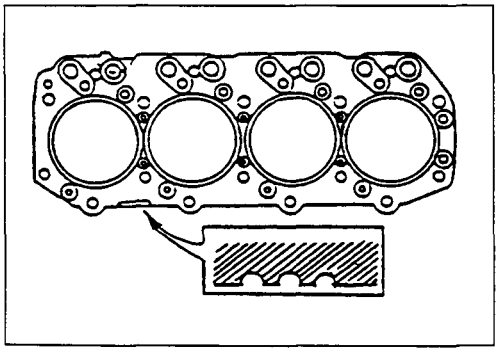

Cylinder Head Gasket Grade Combination mm(in)

Gasket Grade Mark		Piston Projection		Gasket Thickness (Reference)
		4JA1	4JB1T	
Ⓐ		0.718-0.773 (0.0283-0.0304)	0.758-0.813 (0.0298-0.0320)	1.50 (0.059)
Ⓑ		0.773-0.819 (0.0304-0.0322)	0.813-0.859 (0.0320-0.0338)	1.55 (0.061)
Ⓒ		0.819-0.874 (0.0322-0.0344)	0.859-0.914 (0.0338-0.0360)	1.60 (0.063)

Note:

Difference of the each piston projection and must be equal or within 0.1 mm (0.004 in).

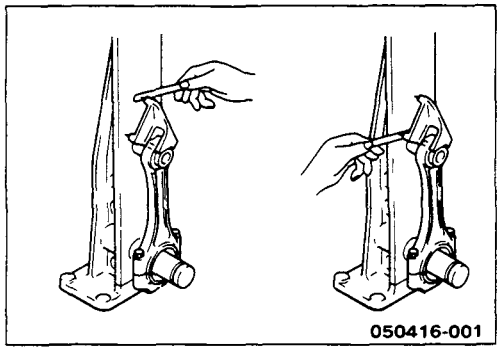

CONNECTING ROD

Connecting Rod Alignment

Use a connecting rod aligner to measure the distortion and the parallelism between the connecting rod big end hole and the connecting rod small end hole.

If either the measured distortion or parallelism exceed the specified limit, the connecting rod must be replaced.

Connecting Rod Alignment

Per Length of 100 mm (3.94 in) mm(in)

	Standard	Limit
Distortion	0.08 or Less (0.003)	0.20 (0.008)
Parallelism	0.05 or Less (0.002)	0.15 (0.006)

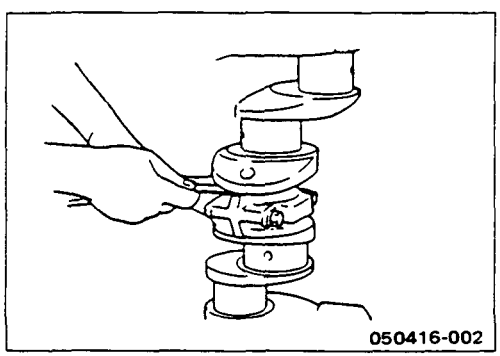

Connecting Rod Side Face Clearance

1. Install the connecting rod to the crankpin.
2. Use a feeler gauge to measure the clearance between the connecting rod big end side face and the crankpin side face.

   If the measured value exceeds the specified limit, the connecting rod must be replaced.

Connecting Rod Big End and Crankpin Side Face Clearance mm(in)

Standard	Limit
0.23 (0.009)	0.35 (0.014)

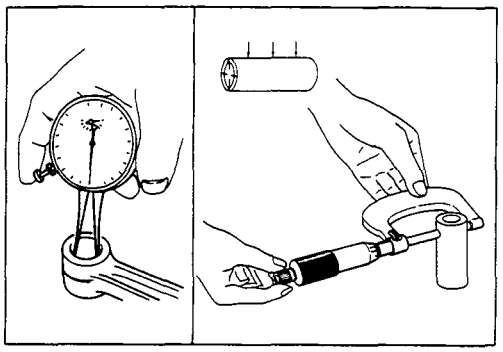

Piston Pin and Connecting Rod Small End Bushing Clearance

Use a caliper calibrator and a dial indicator to measure the piston pin and connecting rod small end bushing clearance.

If the clearance between the piston pin and the connecting rod small end bushing exceeds the specified limit, replace the piston pin and/or the connecting rod bushing.

Piston Pin and Connecting Rod Small End Bushing Clearance — mm(in)

Standard	Limit
0.008 – 0.020 (0.0003 – 0.0008)	0.050 (0.002)

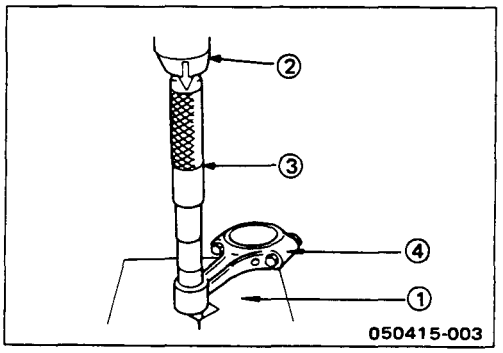

Connecting Rod Bushing Replacement

Connecting Rod Bushing Removal

1. Set the connecting rod small end to the bench press V-block ①.
2. Use the bench press ② and the bar ③ to slowly force the bushing from the connecting rod ④.

Note:

Take care not to damage the connecting rod with the bar when removing the bushing.

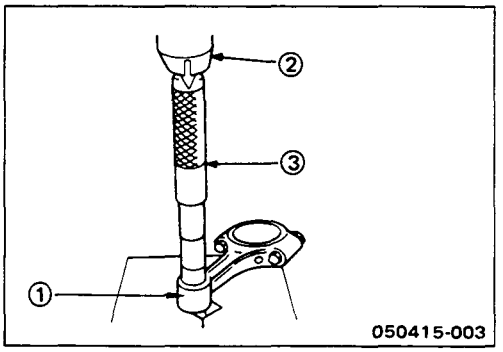

Connecting Rod Bushing Installation

1. Set the connecting rod small end ① to the bench press V-block.

   The connecting rod must be perfectly horizontal.
2. Use the bench press ② and the bar ③ to slowly force the bushing with oil hole into position.

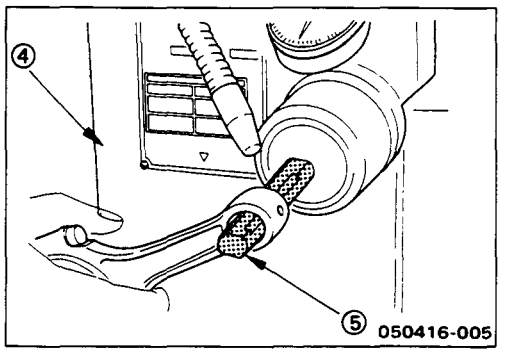

3. Use a pin hole grinder ④ fitted with a reamer ⑤ to ream the piston pin hole.

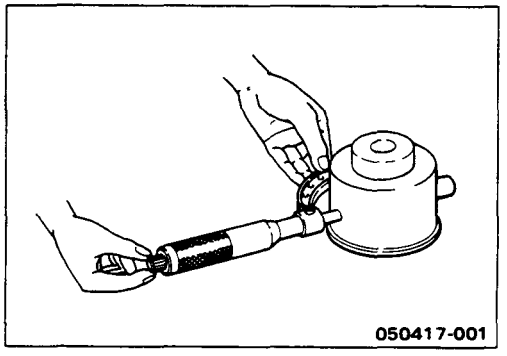

IDLER GEAR SHAFT AND IDLER GEAR

Idler Gear Shaft Outside Diameter

Use a micrometer to measure the idler gear shaft outside diameter.

If the measured value is less than the specified limit, the idler gear must be replaced.

Idler Gear Shaft Outside Diameter mm(in)

Standard	Limit
44.945 – 44.975 (1.769 – 1.770)	44.845 (1.766)

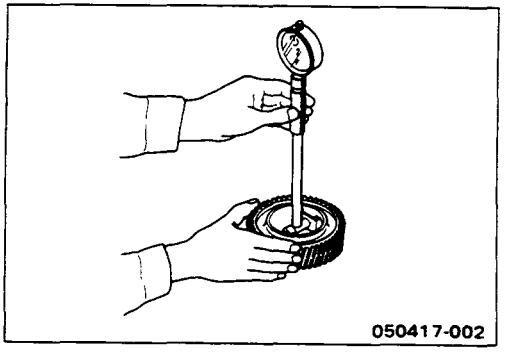

Idler Gear "A" Inside Diameter

1. Use an inside dial indicator or an inside micrometer to measure the idler gear inside diameter.

Idler Gear Inside Diameter mm(in)

Standard	Limit
45.0 – 45.03 (1.7717 – 1.7718)	45.10 (1.7756)

If the clearance between the idler gear shaft outside diameter and the idler gear inside diameter exceeds the limit, the idler gear must be replaced.

Idler Gear Shaft and Idler Gear Clearance mm(in)

Standard	Limit
0.025 – 0.085 (0.0010 – 0.0033)	0.200 (0.008)

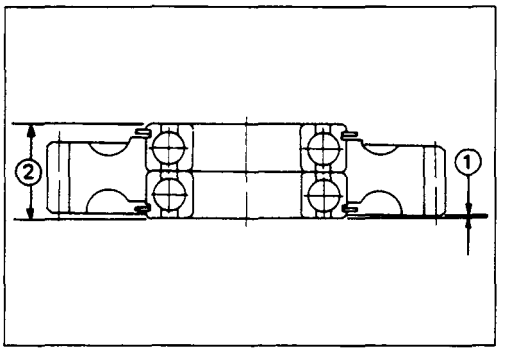

Idler Gear "B"

Bearing Replacement

Bearing Removal

Use a bench press or a hammer and a bar to remove the bearing from the idler gear.

Bearing Installation

Use a bench press and bar to install the bearing into the idler gear.

Bearing Projection and Height	mm(in)
Projection ①	0.4 – 0.6 (0.016 – 0.024)
Height ②	23.7 – 24.0 (0.933 – 0.945)

Note:

The bench press and bar should make contact only with the bearing outer races. Do not allow them to make contact with the bearing inner races.

Bearing damage and reduced bearing service life will result.

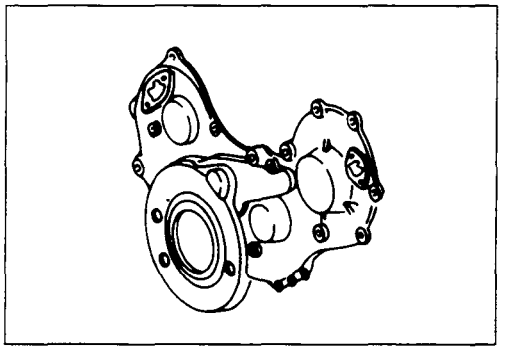

TIMING GEAR CASE COVER

Replace the crankshaft front oil seal if it is excessively worn or damaged.

Crankshaft Front Oil Seal Replacement

Oil Seal Removal

Use a plastic hammer and a screwdriver to tap around the oil seal to free it from the gear case cover.

Take care not to damage the oil seal lip surfaces.

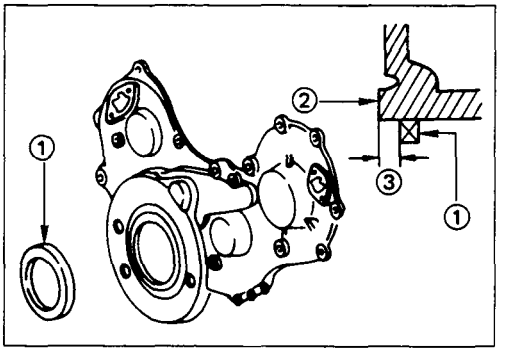

Oil Seal Installation

Use the installer to install the front oil seal ① to the gear case cover ②.

Oil Seal Installer: 5-8840-2061-0

Note the oil seal installation depth ③ shown in the illustration.

Depth ③ = 1 mm (0.039 in.)

REASSEMBLY

INTERNAL PARTS

MINOR COMPONENTS

ROCKER ARM SHAFT AND ROCKER ARM

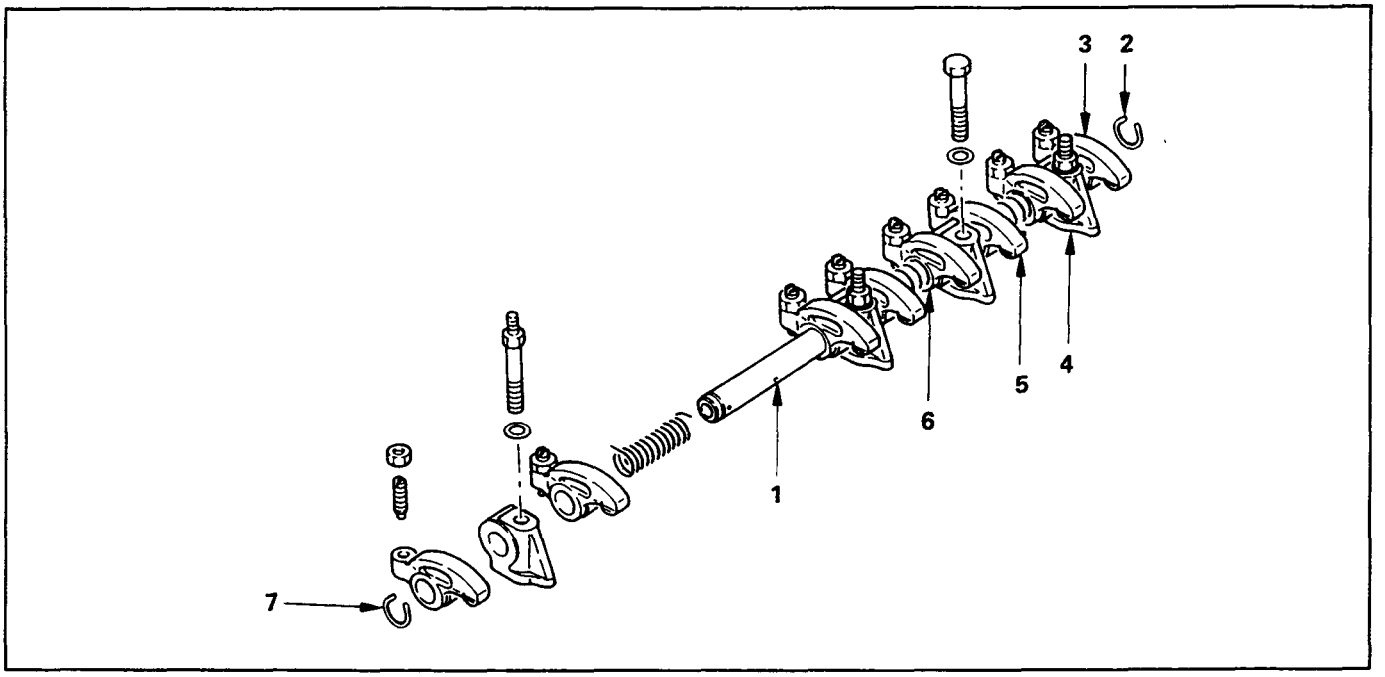

Reassembly Steps

▲ 1. Rocker arm shaft
2. Rocker arm shaft snap ring
3. Rocker arm
4. Rocker arm shaft bracket
5. Rocker arm
6. Rocker arm shaft spring
7. Rocker arm shaft snap ring

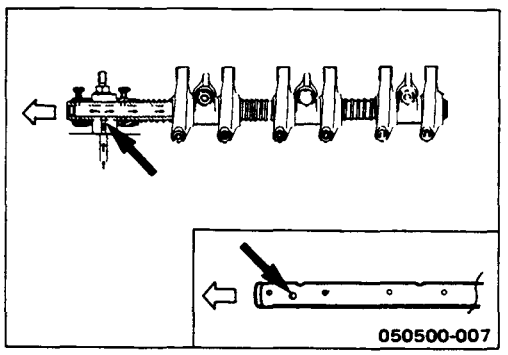

Important Operations

1. Rocker Arm Shaft

1) Position the rocker arm shaft with the large oil hole (4ϕ) facing the front of the engine.
2) Install the rocker arm shaft together with the rocker arm, the rocker arm shaft bracket, and the spring.

CYLINDER HEAD

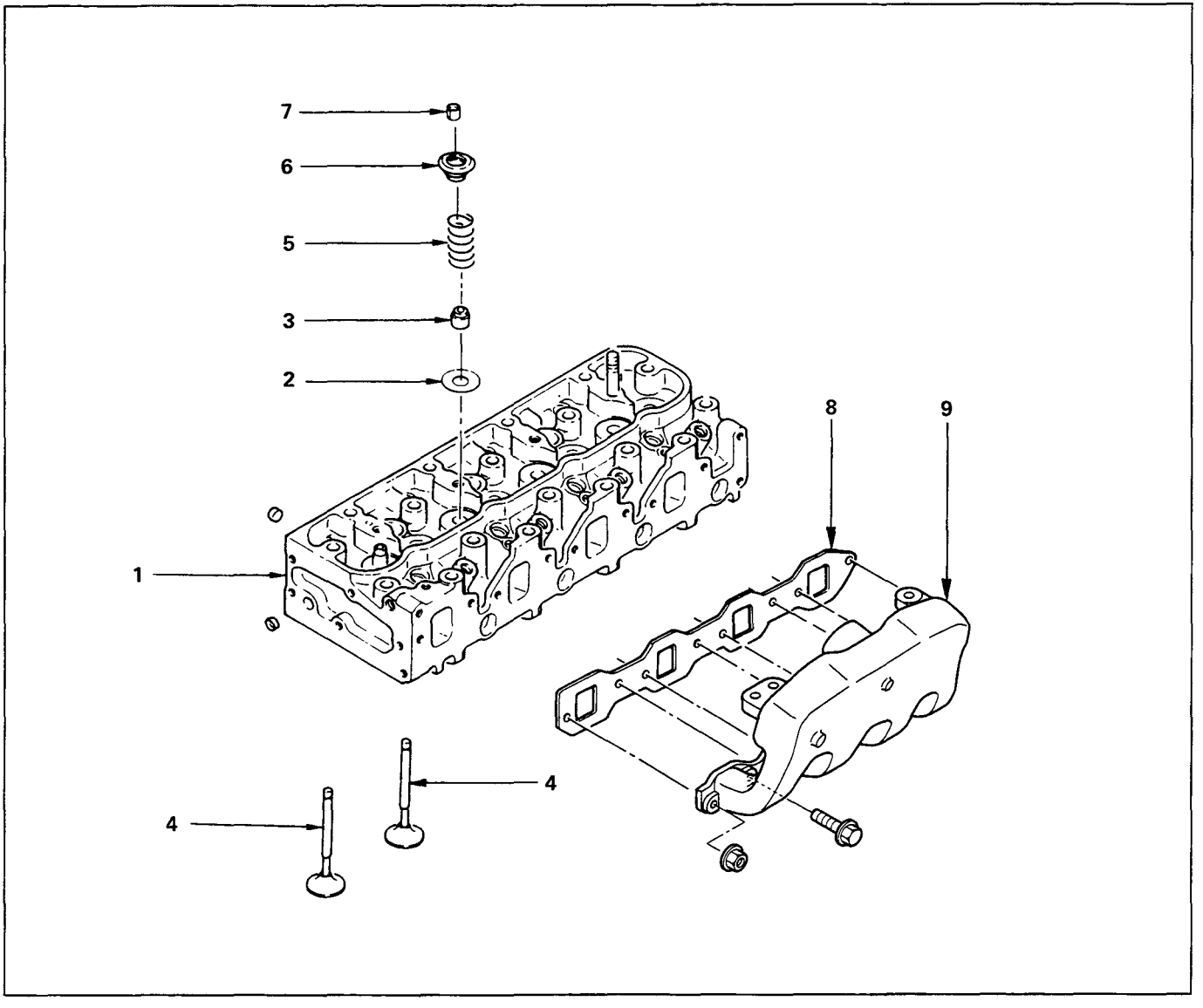

Reassembly Steps

1. Cylinder head
2. Valve spring lower seat
3. ▲ Valve stem oil seal
4. ▲ Intake and exhaust valve
5. ▲ Valve spring
6. Valve spring upper seat
7. ▲ Split collar
8. ▲ Intake manifold gasket
9. ▲ Intake manifold

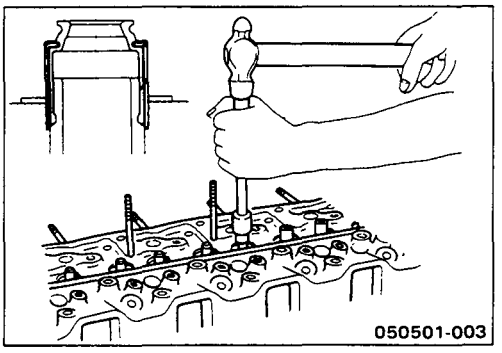

Important Operations

3. Valve Stem Oil Seal

1) Apply a coat of engine oil to the oil seal inner face.
2) Use an oil seal installer to install the oil seal to the valve guide.

   Oil Seal Installer: 5-8840-2033-0

4. Intake and Exhaust Valve

1) Apply a coat of engine oil to each valve stem before installation.
2) Install the intake and exhaust valves.
3) Turn the cylinder head up to install the valve springs.

   Take care not to allow the installed valves to fall free.

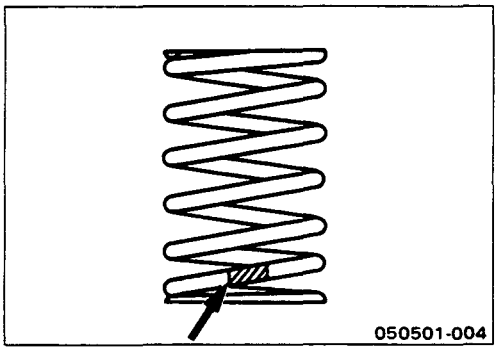

5. Valve Spring

Install the valve spring with their fine pitched end (painted) facing down.

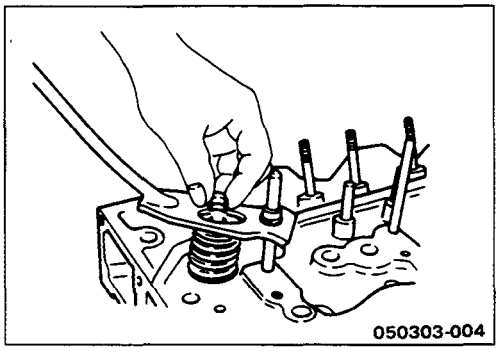

7. Split Collar

1) Use the spring compressor to compress the valve spring into position.

   Spring Compressor: 9-8523-1423-0 (J-29760)
2) Install the split collars to the valve stem.
3) Set the split collars by tapping around the head of the collar with a rubber hammer.

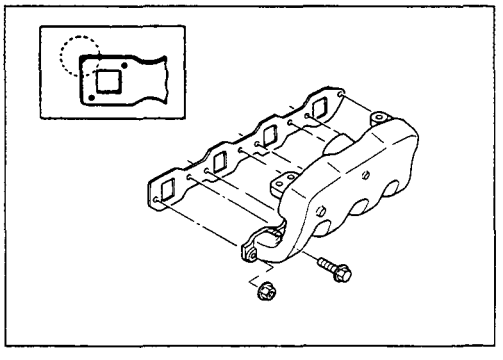

8. Intake Manifold Gasket
9. Intake Manifold

1) Install the manifold gasket with the end having the sharp corners facing the front of the engine.
2) Install the lower intake manifold to the cylinder head.
3) Tighten the manifold bolts to the specified torque.

Manifold Bolt Torque	kg·m(lb.ft/N·m)
1.9 ± 0.5 (13.7 ± 3.6 / 18.62 ±4.90)	

PISTON AND CONNECTING ROD

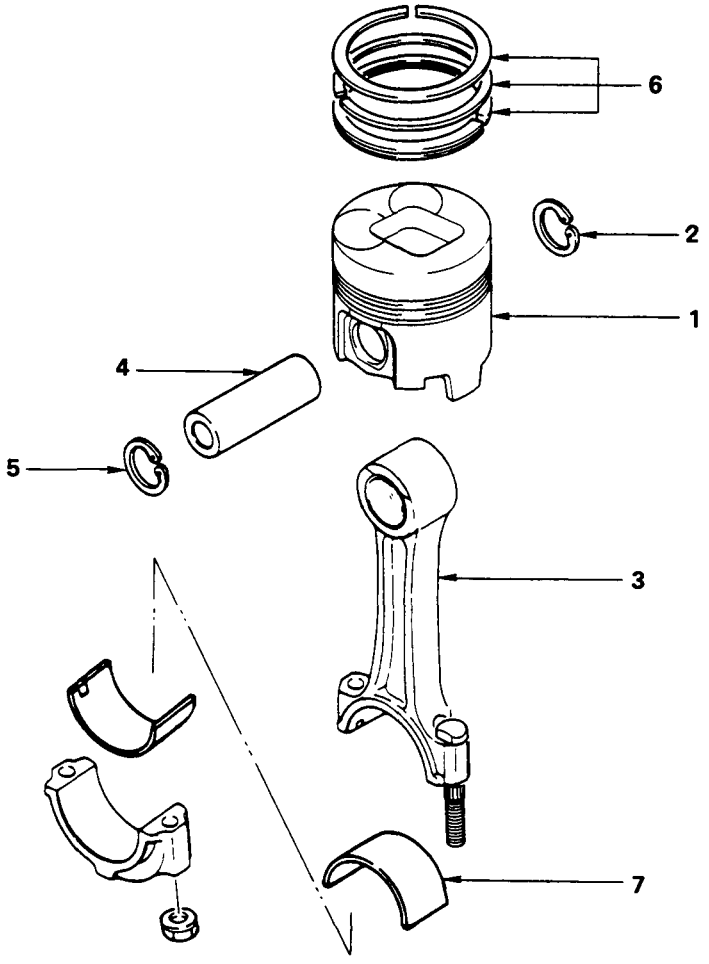

Reassembly Steps

- ▲ 1. Piston
- ▲ 2. Piston pin snap ring
- ▲ 3. Connecting rod
- ▲ 4. Piston pin
- ▲ 5. Piston pin snap ring
- ▲ 6. Piston ring
- ▲ 7. Connecting rod bearing

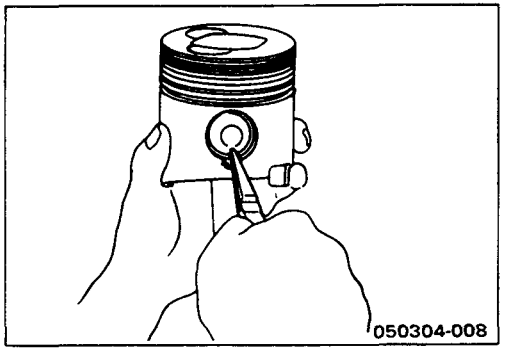

Important Operations

1. **Piston**
2. **Piston Pin Snap Ring**
3. **Connecting Rod**
   1) Clamp the connecting rod in a vise.
      Take care not to damage the connecting rod.
   2) Use a pair of pliers to install the piston pin snap ring to the piston.

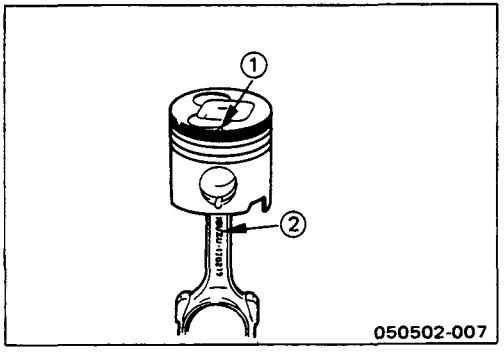

Install the piston to the connecting rod so that the piston head front mark ① and the connecting rod "ISUZU" casting mark ② are facing in the same direction.

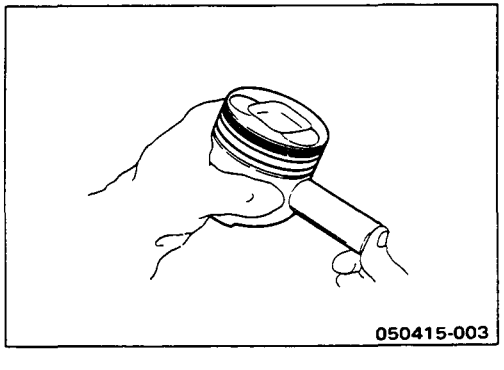

4. **Piston Pin**
   1) Apply a coat of engine oil to the piston pin and the piston pin hole.
   2) Use your fingers to force the piston pin into the piston until it makes contact with the snap ring.

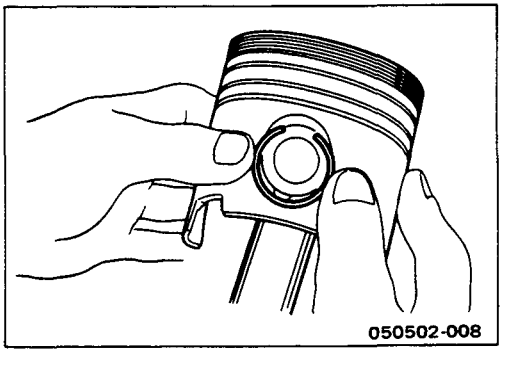

5. **Piston Pin Snap Ring**
   3) Use your fingers to force the piston pin snap ring into the piston snap ring groove.
   4) Check that the connecting rod moves smoothly on the piston pin.

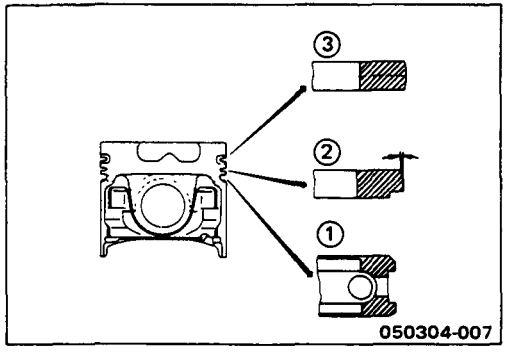

6. Piston Ring

1) Use a piston ring replacer to install the three piston rings.

   Piston Ring Replacer

   Install the piston rings in the order shown in the illustration.

   ① Oil ring
   ② 2nd compression ring
   ③ 1st compression ring

Note:

Install the compression rings with the stamped side facing up.

Insert the expander coil into the oil ring groove so that there is no gap on either side of the expander coil before installing the oil ring.

2) Apply engine oil to the piston ring surfaces.
3) Check that the piston rings rotate smoothly in the piston ring grooves.

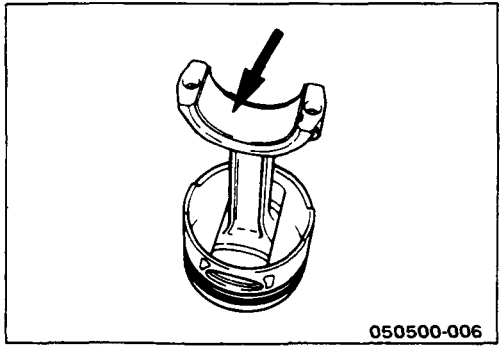

7. Connecting Rod Bearing

Carefully wipe any oil or other foreign material from the connecting rod bearing back face and the connecting rod bearing fitting surface.

INTERNAL PARTS

MAJOR COMPONENTS

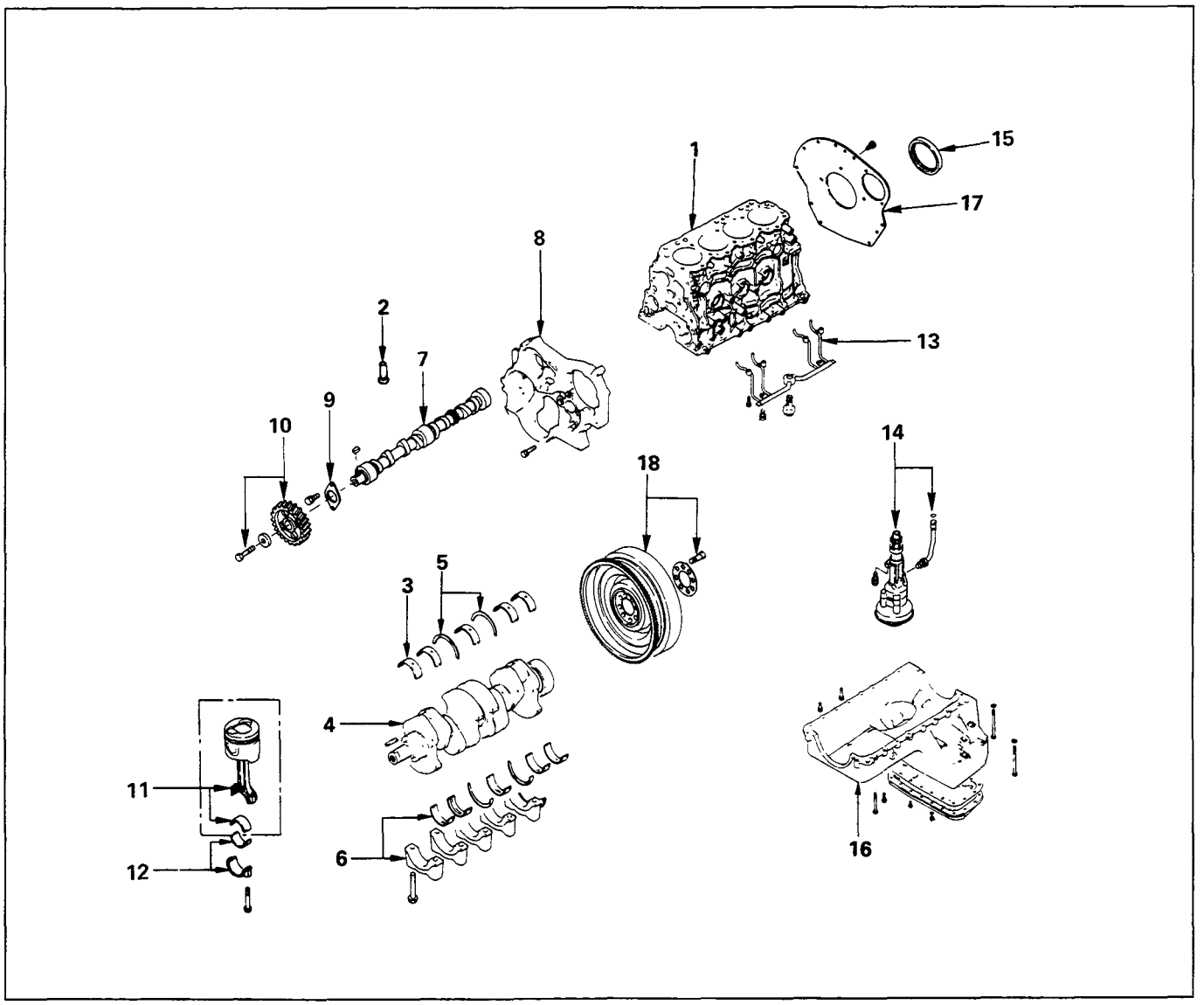

Reassembly Steps-1

1. Cylinder body
2. Tappet
3. Crankshaft upper bearing
4. Crankshaft
▲ 5. Crankshaft thrust bearing
▲ 6. Crankshaft bearing cap with lower bearing
▲ 7. Camshaft
▲ 8. Timing gear case
▲ 9. Camshaft thrust plate
▲ 10. Camshaft timing gear
▲ 11. Piston and connecting rod with upper bearing
▲ 12. Connecting rod bearing cap with lower bearing
▲ 13. Piston cooling oil pipe
▲ 14. Oil pump with oil pipe
▲ 15. Crankshaft rear oil seal
▲ 16. Oil pan
▲ 17. Cylinder body rear plate
18. Flywheel

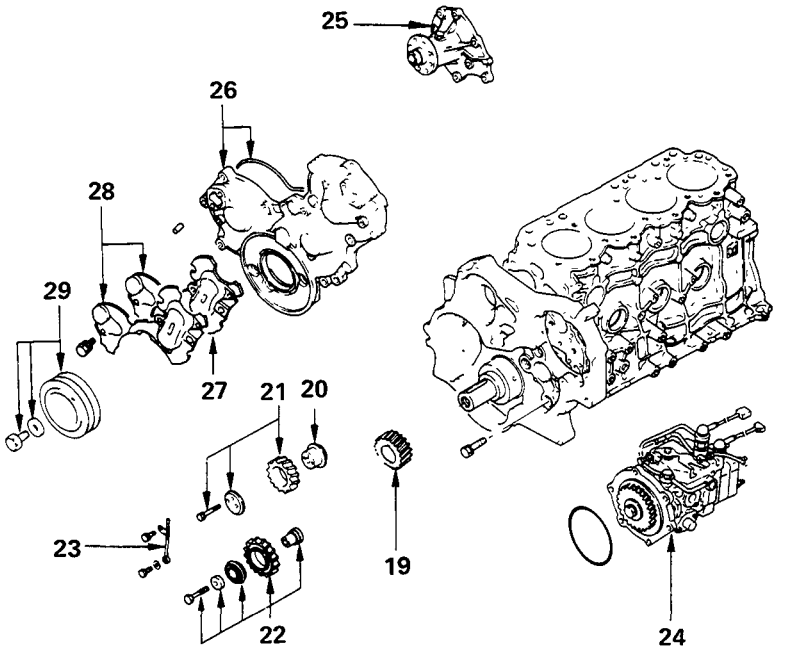

Reassembly Steps-2

▲ 19. Crankshaft timing gear
▲ 20. Idler gear shaft
▲ 21. Idler gear "A"
▲ 22. Idler gear "B" and shaft
▲ 23. Timing gear oil pipe
▲ 24. Injection pump
▲ 25. Water pump
▲ 26. Timing gear case cover
27. Space rubber
28. Gear case cover upper cover and lower cover
▲ 29. Crankshaft damper pulley

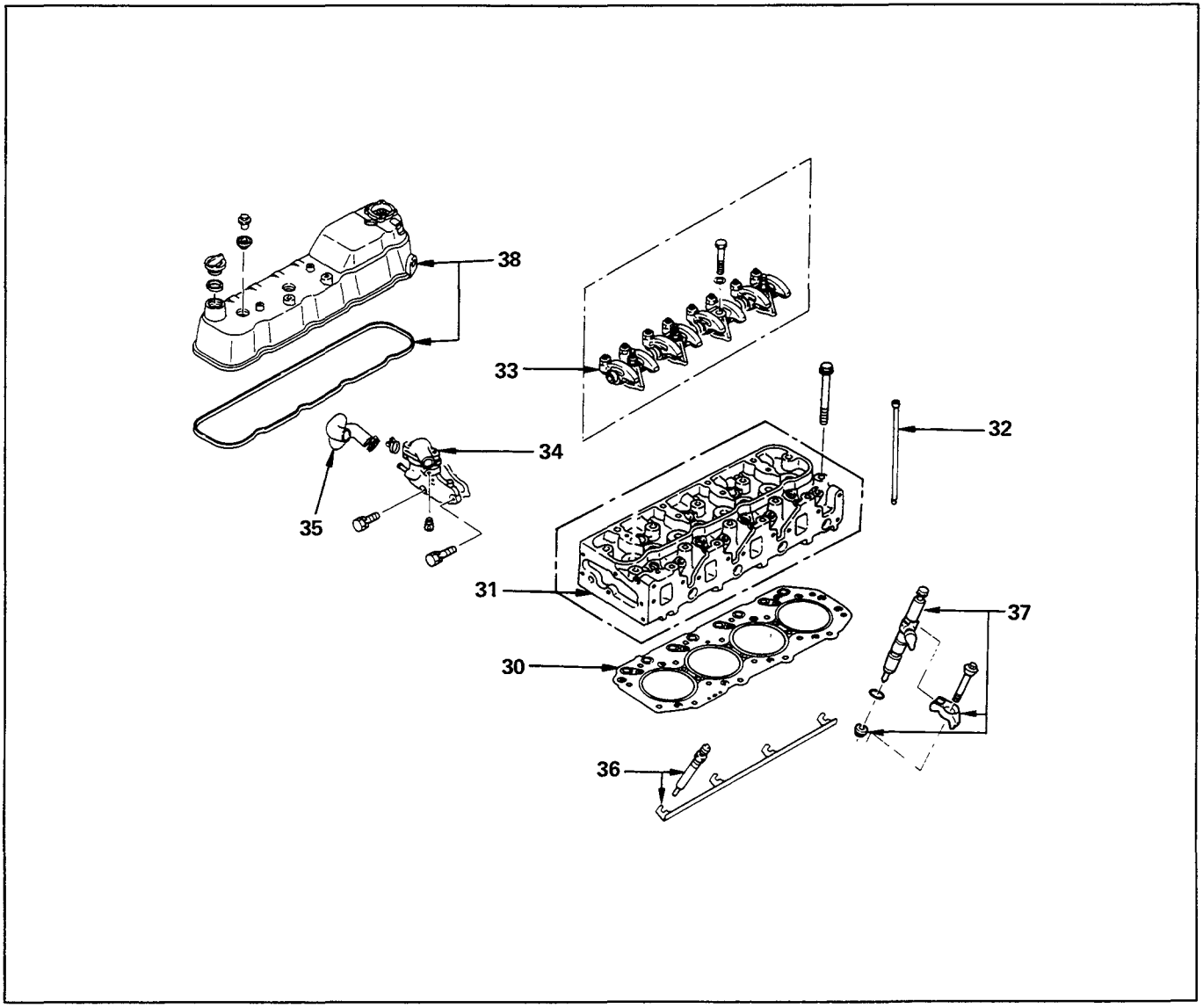

Reassembly Steps-3

- ▲ 30. Cylinder head gasket
- ▲ 31. Cylinder head
- 32. Push rod
- ▲ 33. Rocker arm shaft and rocker arm
- ▲ 34. Thermostat housing with thermo switch
- 35. Water by-pass hose
- ▲ 36. Glow plug and glow plug connector
- ▲ 37. Injection nozzle holder
- ▲ 38. Cylinder head cover

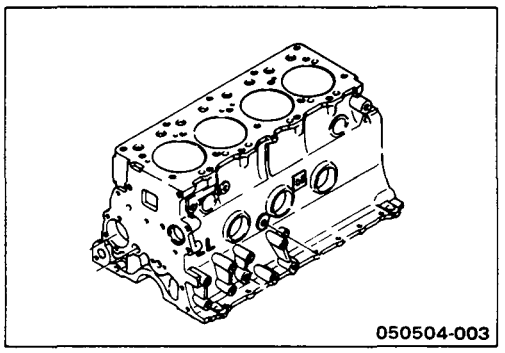

Important Operations

1. Cylinder Body

Use compressed air to thoroughly clean the inside and outside surfaces of the cylinder body, the oil holes, and the water jackets.

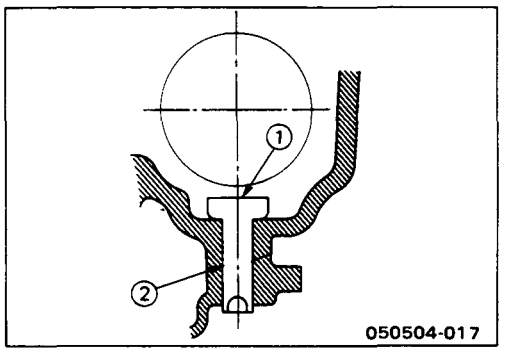

2. Tappet

1) Apply a coat of engine oil to the tappet ① and the cylinder body tappet insert holes ②.
2) Locate the position mark applied at disassembly (if the tappet is to be reused).

Note:

The tappet must be installed before the camshaft installation.

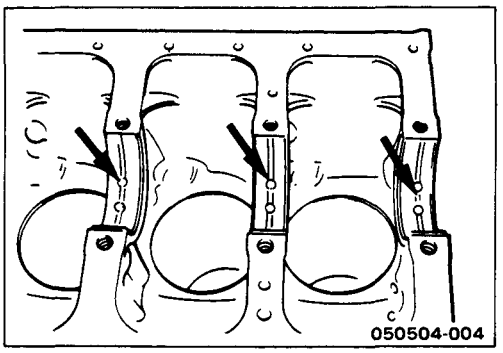

3. Crankshaft Upper Bearing

The crankshaft upper bearings have an oil hole and an oil groove. The lower bearings do not.

1) Carefully wipe any foreign material from the upper bearing.

Note:

Do not apply engine oil to the bearing back faces and the cylinder body bearing fitting surfaces.

2) Locate the position mark applied at disassembly if the removed upper bearings are to be reused.

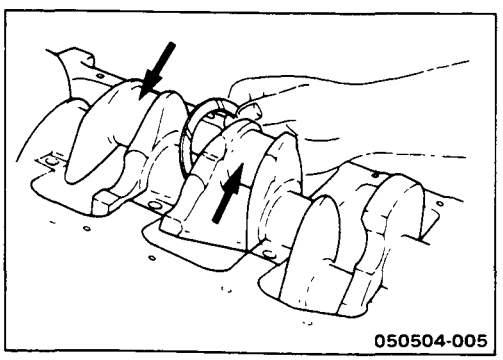

4. Crankshaft

Apply an ample coat of engine oil to the crankshaft journals and the crankshaft bearing surfaces before installing the crankshaft.

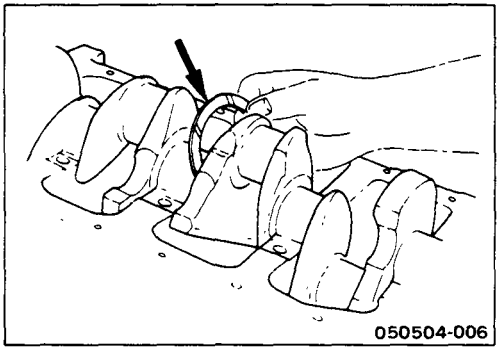

5. Crankshaft Thrust Bearing

Apply an ample coat of engine oil to the thrust bearings before installation.

Install the thrust bearings to the crankshaft center journal.

The thrust bearing oil grooves must be facing the sliding faces.

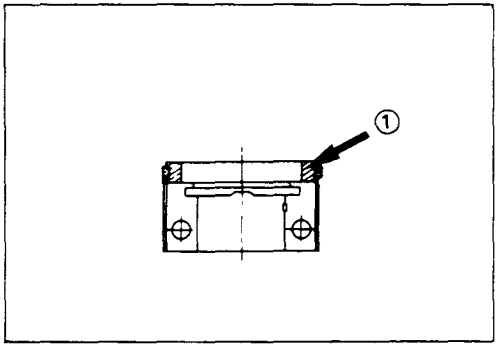

6. Crankshaft Bearing Cap with Lower Bearing

Before the crankshaft bearing installation, select the appropriate bearings in accordance with the description in **CRANK BEARING SELECTION** of **INSPECTION AND REPAIR.**

1) Apply the recommended liquid gasket or its equivalent to the No. 5 crankshaft bearing cap ① as shown in the illustration.

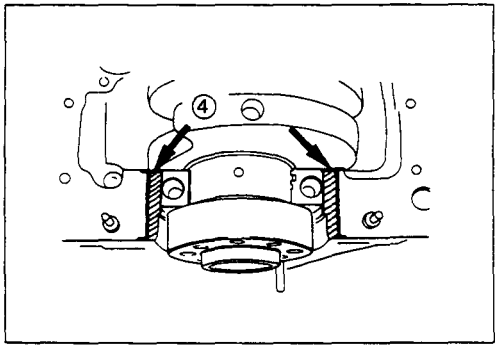

2) Apply the recommended liquid gasket or its equivalent to the No. 5 crankshaft bearing cap cylinder body fitting surfaces at the points ④ shown in the illustration.

Note:

Be sure that the bearing cap fitting surface is completely free of oil before applying the liquid gasket.

Do not allow the liquid gasket to obstruct the cylinder thread holes and bearings.

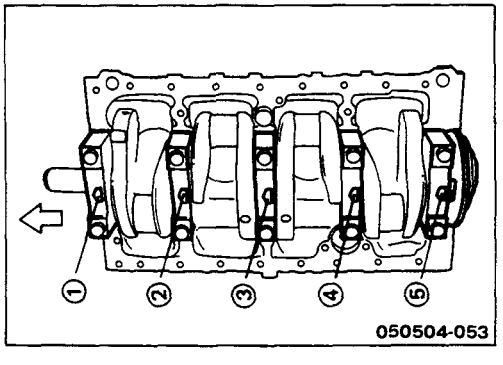

4) Install the bearing caps with the bearing cap head arrow mark facing the front of the engine.

   The bearing cap numbers must be facing up.

5) Apply engine oil to the crankshaft bearing cap bolts.

6) Temporarily tighten the bearing cap bolts.

   The bolts will be tightened to the specified torque after the crankshaft rear oil seal is installed.

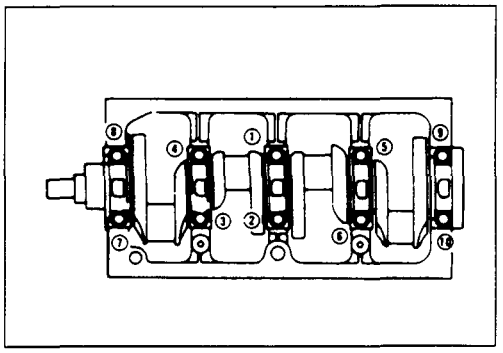

7) Tighten the crankshaft bearing cap bolts to the specified torque a little at a time in the sequence shown in the illustration.

Crankshaft Bearing Cap Torque	kg·m(lb.ft/N·m)
17 ± 1 (123.0 ± 7.2 / 166.7 ± 9.8)	

8) Check to see the crankshaft turns smoothly by rotating it manually.

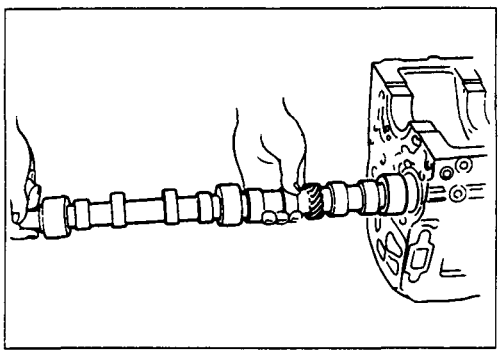

7. Camshaft

1) Apply a coat of engine oil to the camshaft and the camshaft bearings.

   Install the camshaft to the cylinder body.

   Take care not to damage the camshaft bearings.

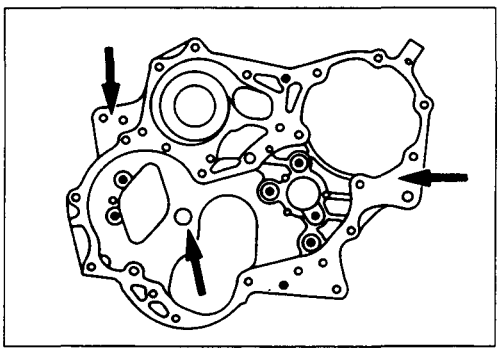

8. Timing Gear Case

1) Tighten the timing gear case with timing gear case gasket to the specified torque.

Timing Gear Case Bolt Torque	kg·m(lb.ft/N·m)
1.9 ± 0.5 (13.7 ± 3.6 / 18.6 ± 4.9)	

2) Cut away the flash from the gasket.

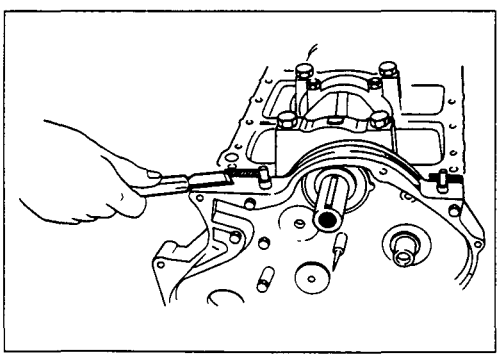

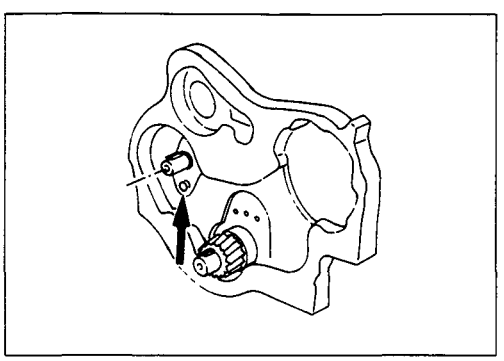

9. Camshaft Thrust Plate

Install the thrust plate to the cylinder body and tighten the thrust plate bolts to the specified torque.

Thrust Plate Bolt Torque	kg·m(lb.ft/N·m)
1.8 ± 0.5 (13.0 ± 3.6 / 17.6 ± 4.9)	

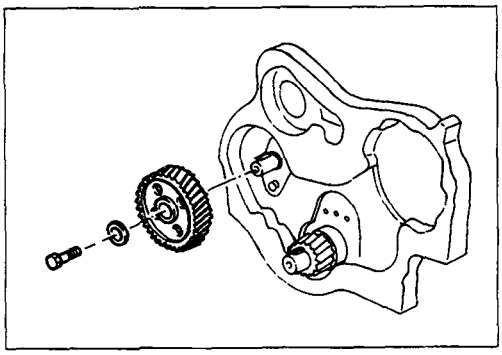

10. Camshaft Timing Gear

1) Install the camshaft timing gear to the camshaft.
   The timing gear mark ("Y – Y") must be facing outward.
2) Tighten the timing gear to the specified torque.

Timing Gear Bolt Torque	kg·m(lb.ft/N·m)
11.0 ± 1 (79.6 ± 7.2 / 107.8 ± 9.8)	

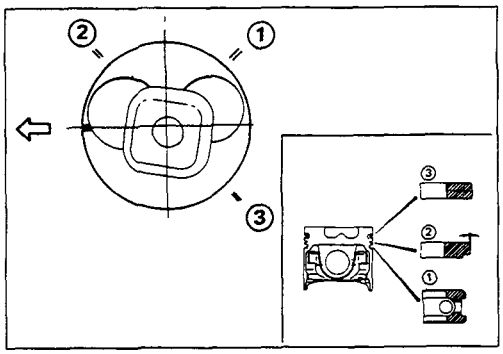

11. Piston and Connecting Rod with Upper Bearing

12. Connecting Rod Bearing Cap with Lower Bearing

1) Apply a coat of engine oil to the circumference of each piston ring and piston.
2) Position the piston ring gaps as shown in the illustration.
   ① Oil ring
   ② 2nd Compression ring
   ③ 1st Compression ring

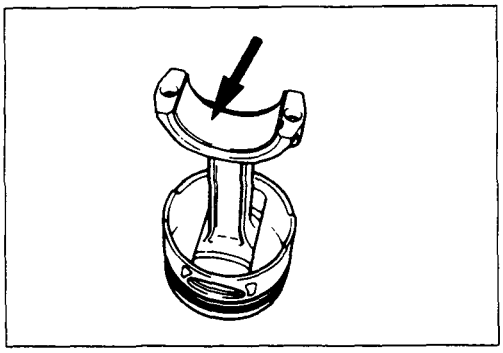

3) Apply a coat of molybdenum disulfide grease to the two piston skirts.
   This will facilitate smooth break-in when the engine is first started after reassembly.
4) Apply a coat of engine oil to the upper bearing surfaces.
5) Apply a coat of engine oil to the cylinder wall.

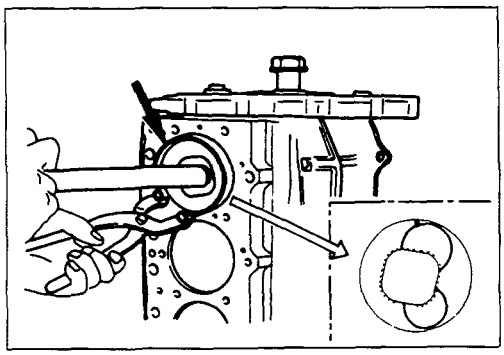

6) Position the piston head front mark so that it is facing the front of the engine.
7) Use the piston ring compressor to compress the piston rings.
   Piston Ring Compressor: 5-8840-9018-0 (J-8037)
8) Use a hammer grip to push the piston in until the connecting rod makes contact with the crankpin.
   At the same time, rotate the crankshaft until the crankpin is at BDC.

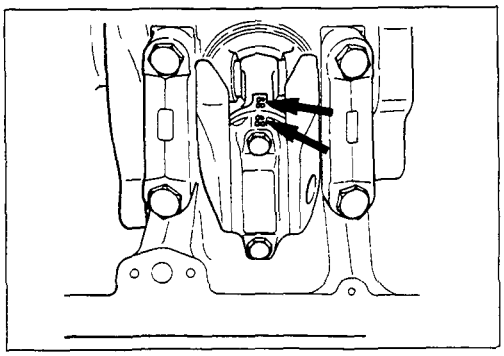

9) Align the bearing cap cylinder number marks and the connecting rod cylinder number marks.
   The cylinder number marks must be turned toward the exhaust manifold.

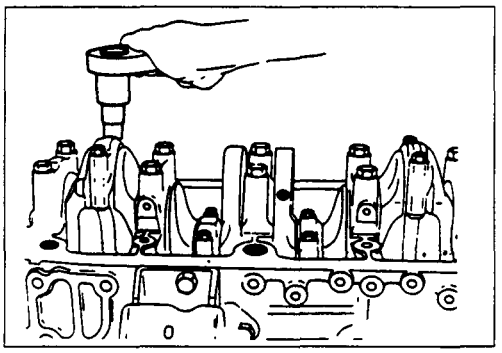

10) Apply a coat of engine oil to the threads and setting faces of each connecting rod cap bolt.
11) Tighten the connecting rod caps to the specified torque.

Connecting Rod Bearing Cap Bolt Torque	kg·m(lb.ft/N·m)
8.5 ± 0.5 (61.5 ± 3.6 / 83.3 ± 4.9)	

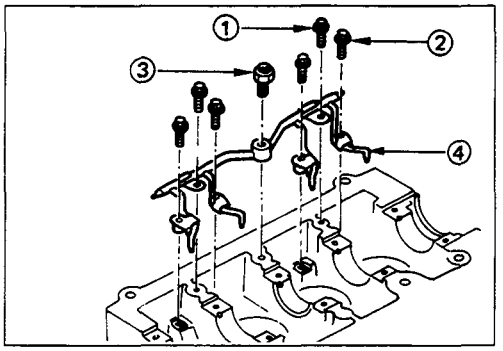

13. Piston Cooling Oil Pipe

1) Install the piston cooling oil pipe to the cylinder body.
2) Tighten the oil pipe bolts and relief valve to the specified torque.

Oil Pipe Bolt Torque	kg·m(lb.ft/N·m)
① M8 × 1.25	1.9± 0.5 (13.7 ± 3.6 / 14.7± 4.9)
② M6 × 1.00	0.8 ± 0.2 (5.1 ± 1.4 / 7.8 ± 2.0)

Relief Valve Torque	kg·m(lb.ft/N·m)
③ M16 × 1.5	3.0± 0.5 (21.7 ± 3.6 / 29.4± 4.9)

Note:

Check that there is no interference between the piston and the oiling jet pipe ④ by slowly rotating the crankshaft.

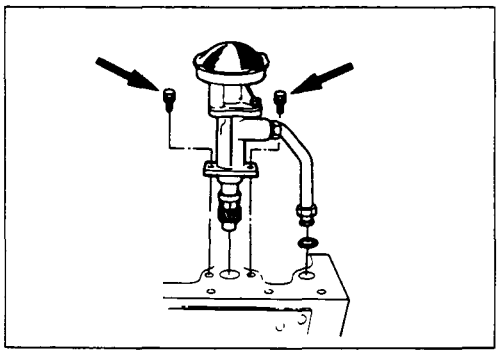

14. Oil Pump with Oil Pipe

Install the oil pump with the oil pipe and tighten the bolts to the specified torque.

Oil Pump Bolt Torque	kg·m(lb.ft/N·m)
1.9 ± 0.5 (13.7 ± 3.6 / 18.6 ± 4.9)	

Note:

Take care not to damage the O-rings when tightening the oil pipe bolts.

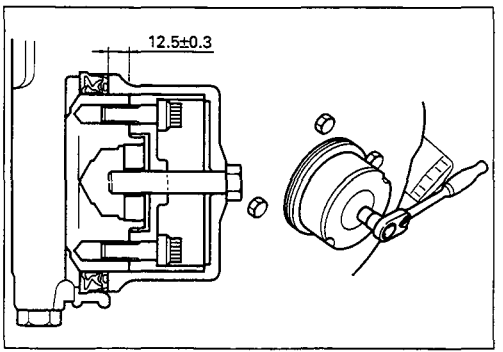

15. Crankshaft Rear Oil Seal

Use a oil seal installer to install the crankshaft rear oil seal.

Oil Seal Installer : 5-8840-2359-0

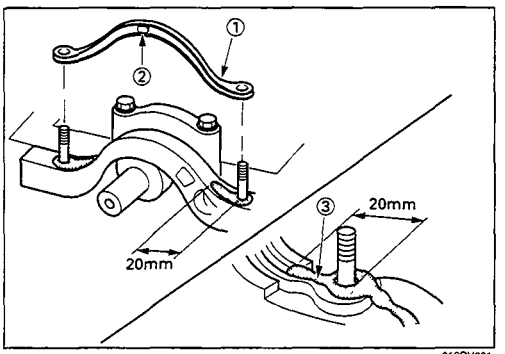

012RV001

16. Oil Pan

1) Apply the recommended liquid gasket or its equivalent to arch gasket fitting surface as shown in the illustration.

2) Install the oil pan front gasket 1 to the timing gear case arches.

The gasket projection 2 must be facing forward.

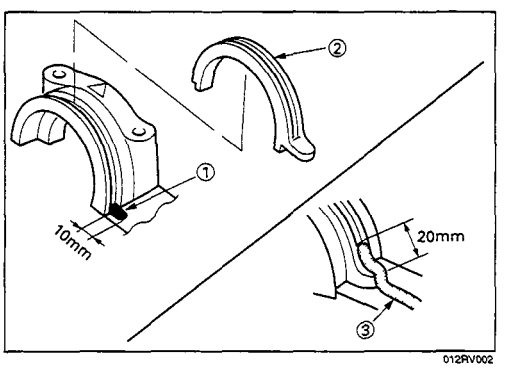

012RV002

3) Install the rear arch gasket 2 to the No. 5 bearing cap.

Use your fingers to push the arch gasket into the bearing cap groove.

Take care not to scratch the arch gasket outer surface.

Also apply the recommended liquid gasket or its equivalent to arch gasket fitting area as indicated in the illustration.

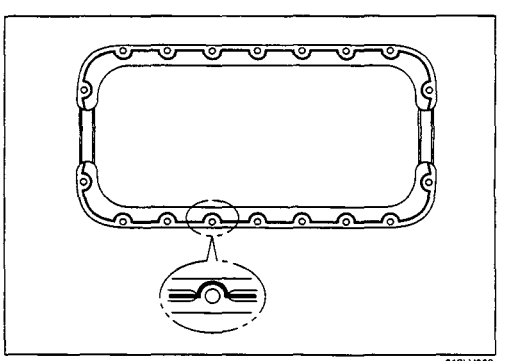
013LV003

4) Apply the recommended liquid gasket or its equivalent to groove of the oil pan fitting surface as shown in the illustration.

Note:

Be sure that the oil pan fitting surface is completely free of oil and dust before applying the liquid gasket.

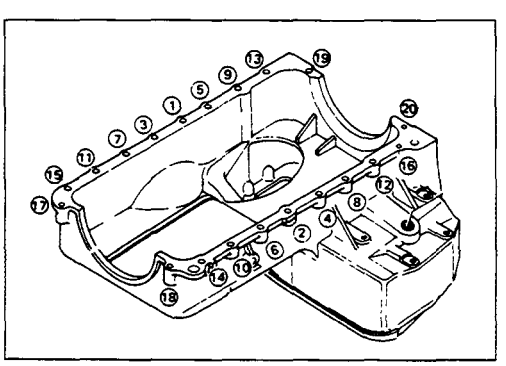

5) Install the oil pan to the cylinder body.

6) Tighten the oil pan bolts to the specified torque a little at a time in the sequence shown in the illustration.

Oil Pan Bolt Torque	kg·m(lb.ft/N·m)
1.9 ± 0.5 (13.7 ± 3.6 / 18.6 ± 4.9)	

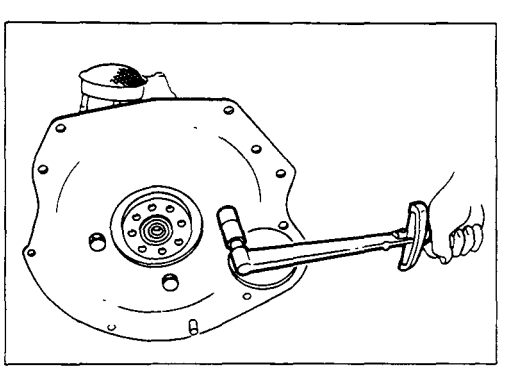

17. Cylinder Body Rear Plate

1) Align the rear plate with the cylinder body knock pins.

2) Tighten the rear plate to the specified torque.

Rear Plate Torque	kg·m(lb.ft/N·m)
8.4 ± 0.8 (60.7 ± 5.8 / 82.3 ± 7.8)	

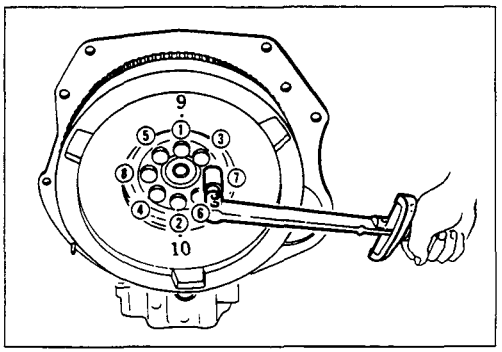

18. Flywheel

1) Block the crankshaft with a piece of hard wood to prevent the flywheel from turning.
2) Apply a coat of engine oil to the threads of the flywheel bolts.
3) Align the flywheel with the crankshaft dowel pin.
4) Tighten the flywheel bolts to the specified torque in the numerical order shown in the illustration.

Flywheel Bolt Torque	kg·m(lb.ft/N·m)
12.0 ± 0.5 (86.8 ± 3.6 / 117.6 ± 4.9)	

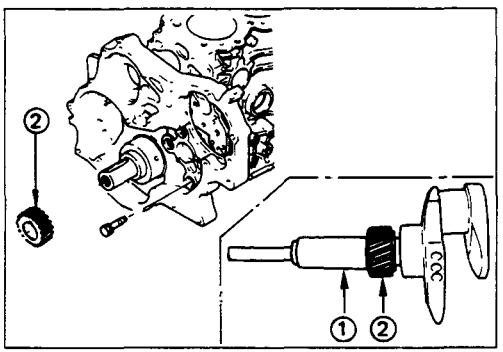

19. Crankshaft Timing Gear

Use the crankshaft timing gear installer ① to install the crankshaft timing gear ②.

The crankshaft timing gear setting mark ("X–X") must be facing outward.

Crankshaft Timing Gear Installer: 9-8522-0020-0

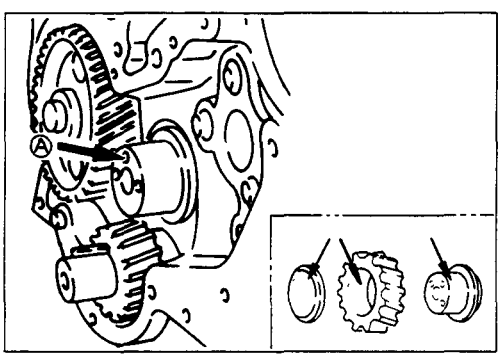

20. Idler Gear Shaft

21. Idler Gear "A"

1) Apply engine oil to the idler gear and the idler gear shaft.

   The idler gear shaft oil hole Ⓐ must be facing up.
2) Position the idler gear setting marks "X" and "Y" so that they are facing the front of the engine.

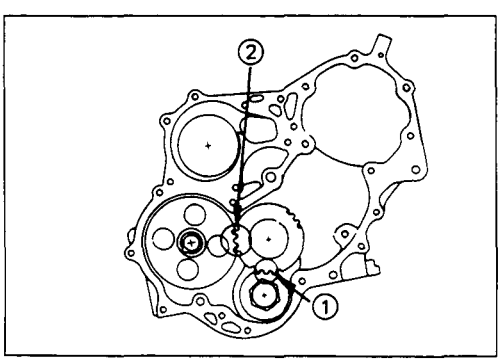

3) Align the idler gear "X" setting mark with the crankshaft timing gear ① "X–X" setting mark.
4) Align the idler gear "Y" setting mark with the camshaft timing gear ② "Y–Y" setting mark.
5) Install the thrust collar and bolts to the cylinder body through the shaft.

   The thrust collar oil hole must be facing up, and the thrust collar chamfered must be outward.
6) Tighten the idler gear bolt to the specified torque.

Idler Gear "A" Bolt Torque	kg·m(lb.ft/N·m)
1.9 ± 0.5 (13.7 ± 3.6/18.6 ± 4.9)	

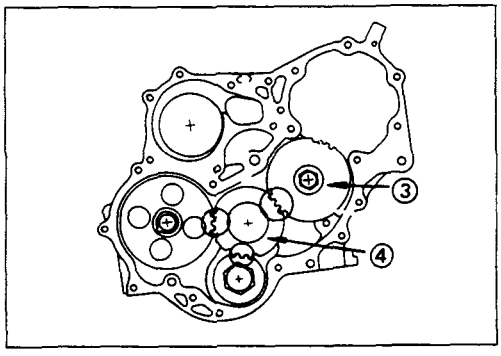

22. Idler Gear "B" and Shaft

1) Apply engine oil to the idler gear and the idler gear shaft.
2) Align the idler gear "B" ③ "Z" setting mark with the idler gear "A" ④ "Z–Z" setting mark.
3) Tighten the idler gear bolt to the specified torque.

Idler Gear "B" Bolt Torque	kg·m(lb.ft/N·m)
11.0 ± 1.0 (79.6 ± 7.2/107.8 ± 9.8)	

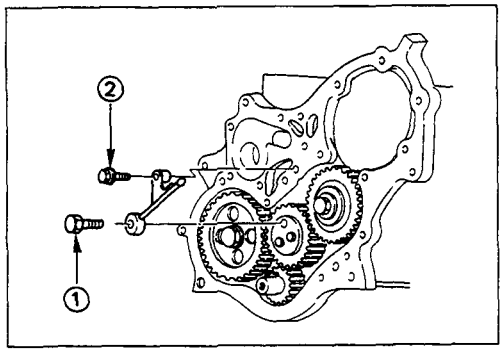

23. Timing Gear Oil Pipe

1) Install the oil pipe to the timing gear case and idler gear "A".
2) Tighten the oil pipe eye bolt ① and bolt ② to the specified torque.

Eye Joint and Bolt Torque	kg·m(lb.ft/N·m)
1.25 ± 0.25 (9.0 ± 1.8/12.3 ± 2.5)	

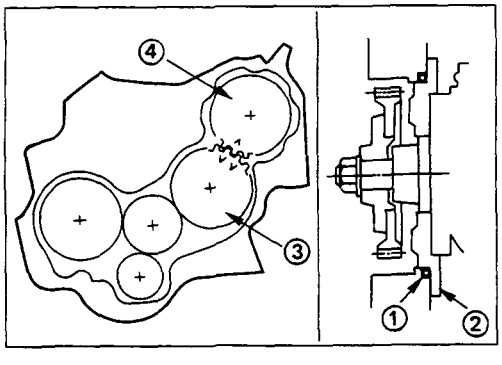

24. Injection Pump

1) Install the O-ring ① to the injection pump flange ②.
2) Install the injection pump to the timing gear case.

   Align the idler gear "B" ③ "V–V" mark with the injection pump timing gear ④ "V" mark.

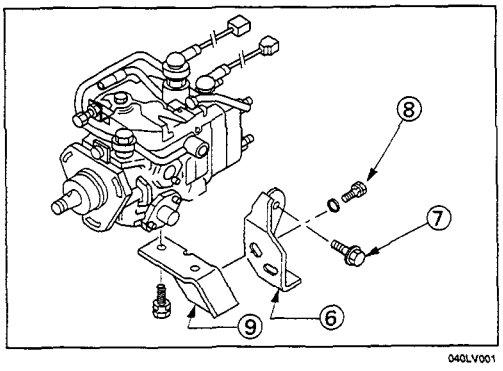

3) Install the injection pump rear bracket ⑥ and the rear bracket bolts ⑦ to the cylinder body.
4) Install the rear bracket bolts ⑧ to the injection pump bracket ⑨.

5) Tighten the injection pump bracket bolts to the specified torque.

Injection Pump Bracket Bolt Torque	kg·m(lb.ft/N·m)
1.9 ± 0.5 (13.7 ± 3.6/18.6 ± 4.9)	

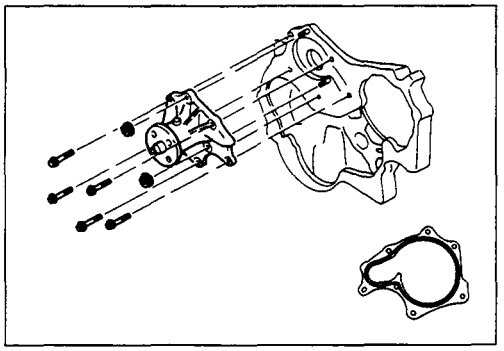

25. Water Pump

1) Apply the recommended liquid gasket or its equivalent to the water pump at the position shown in the illustration.

   Do not apply an excessive amount of liquid gasket.

2) Tighten the water pump bolts to the specified torque.

Water Pump Bolt Torque	kg·m(lb.ft/N·m)
2.0 ± 0.5 (14.5 ± 3.6/19.6 ± 4.9)	

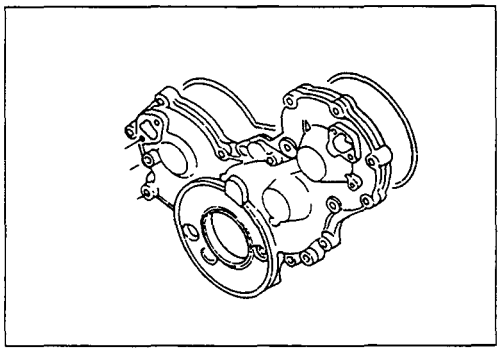

26. Timing Gear Case Cover

1) Align the gear case with the timing gear case knock pin and then install the timing gear case cover.
2) Tighten the gear case cover bolts to the specified torque.

Gear Case cover Bolt Torque	kg·m(lb.ft/N·m)
1.9 ± 0.5 (13.7 ± 3.6/18.6 ± 4.9)	

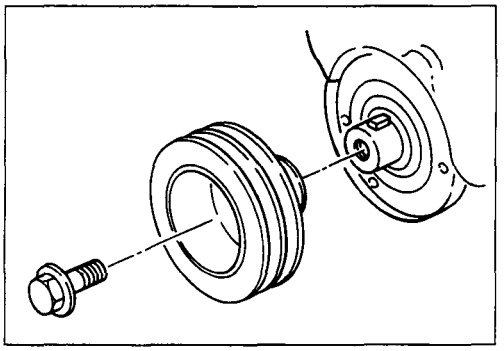

29. Crankshaft Damper Pulley

Tighten the crankshaft damper pulley bolt to the specified torque.

Note:

Hold the flywheel ring gear stationary to prevent the crankshaft from turning when tightening the damper pulley.

Crankshaft Damper Pulley Bolt Torque	kg·m(lb.ft/N·m)
21.0 ± 2.0 (151.9 ± 14.5/206.0 ± 19.6)	

Take care not to damage the crankshaft damper pulley boss.

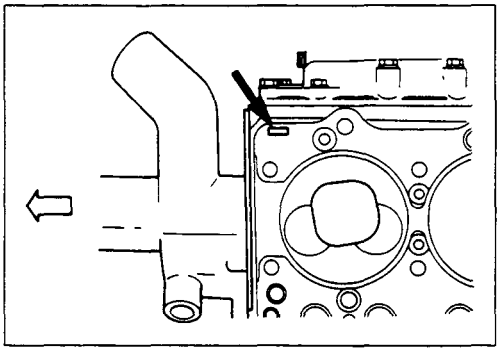

30. Cylinder Head Gasket

The cylinder head gasket "TOP" mark must be facing up.

Note:

Before the gasket installation, measure the piston head projection and select the appropriate head gasket.

Refer to "INSPECTION AND REPAIR", "Cylinder Head Gasket Selection".

31. Cylinder Head

1) Align the cylinder body dowels and the cylinder head dowel holes.

   Carefully place the cylinder head on the cylinder head gasket.

2) Apply a coat of engine oil to the cylinder head bolt threads and setting faces.

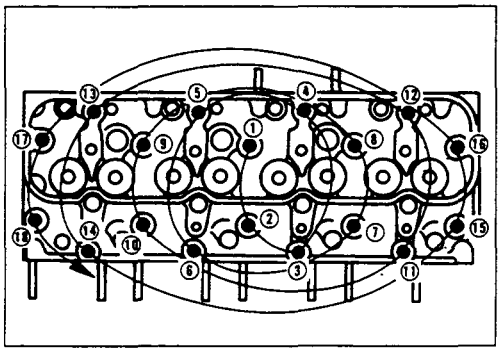

3) Tighten the cylinder head bolts in two steps (4JA1) or three steps (4JB1T, 4JA1T).

Follow the numerical sequence shown in the illustration.

Angle gauge: 5-8840-0266-0

Cylinder Head Bolt Torque			kg·m(lb.ft/N·m)
	1st Step	2nd Step	3rd Step
4JB1T	5.0 ± 0.5 (36.2 ± 3.6/49.00 ± 4.90)	60°~75°	60°~75°

Cylinder Head Bolt Torque			kg·m(lb.ft/N·m)
		1st Step	2nd Step
4JA1	New bolt	5.0±0.5 (36.2±3.6/83.3±4.9)	8.7±0.5 (62.9±3.6/85.3±4.9)
	Reuse bolt	8.5±0.5 (61.4±3.6/83.3±4.9)	10.5±0.5 (75.9±3.6/102.9±4.9)

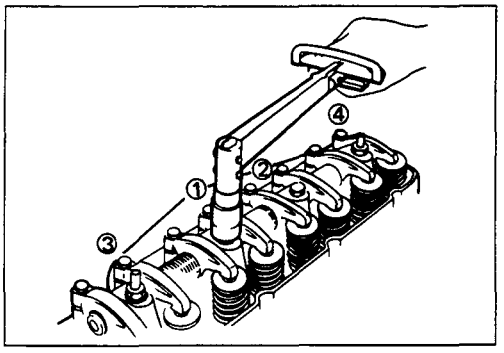

33. Rocker Arm Shaft and Rocker Arm

Tighten the rocker arm shaft bracket bolts in the numerical order shown in the illustration.

Rocker Arm Shaft Bracket Bolt Torque	kg·m(lb.ft/N·m)
5.5 ± 0.5 (39.8 ± 3.6/54.0 ± 4.9)	

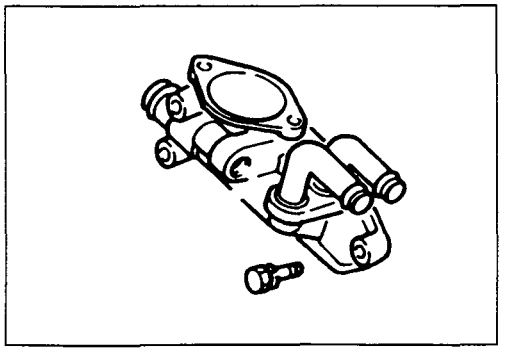

34. Thermostat Housing

1) Install the thermostat housing.
2) Tighten the thermostat housing bolts to the specified torque.

Thermostat Housing Bolt Torque	kg·m(lb.ft/N·m)
1.9 ± 0.5 (13.7 ± 3.6/18.6 ± 4.9)	

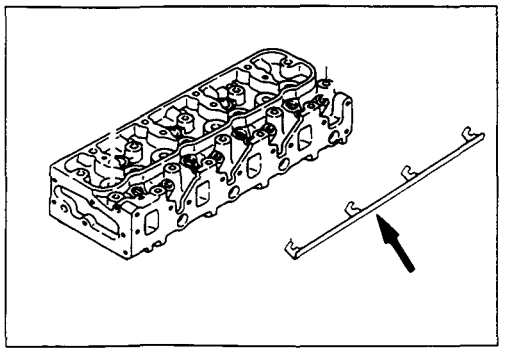

36. Glow Plug and Glow Plug Connector

1) Install the glow plugs to the cylinder head.
2) Tighten the glow plugs to the specified torque.

Glow Plug Torque	kg·m(lb.ft/N·m)
2.25 ± 0.25 (16.3 ± 1.8/22.1 ± 2.5)	

3) Install the glow plug connector.

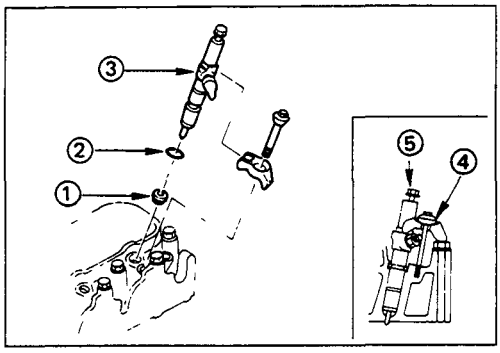

37. Injection Nozzle Holder

1) Install the injection nozzle gasket ① and the O-ring ② to the injection nozzle holder ③.
   Be sure that the O-ring fits snugly in the injection nozzle groove.
2) Install the nozzle holder toghther with the nozzle holder bracket ④ to the cylinder head.

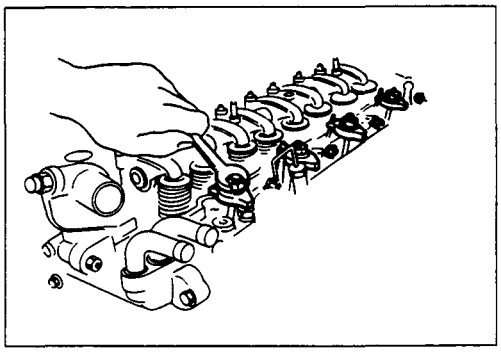

Nozzle Holder Bracket Bolt Torque	kg·m(lb.ft/N·m)
3.8 ± 0.6 (27.5 ± 4.3/37.2 ± 5.9)	

3) Tighten the holder nut with washer ⑤ to the specified torque.

Injection Nozzle Holder Nut Torque	kg·m(lb.ft/N·m)
3.8 ± 0.6 (26.0 ± 4.3/37.2 ± 5.9)	

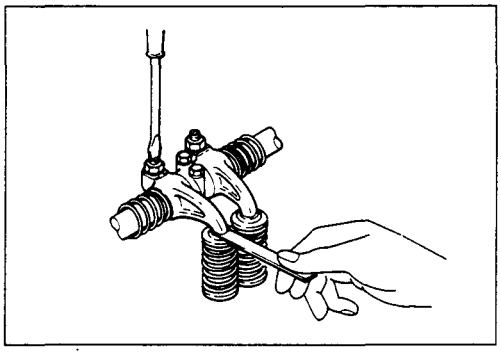

Note on Valve Clearance Adjustment

Valve clearances must be adjusted before the cylinder head cover is reinstalled.

Refer to "Valve Clearance Adjustment" in the "Servicing" Section of this Manual.

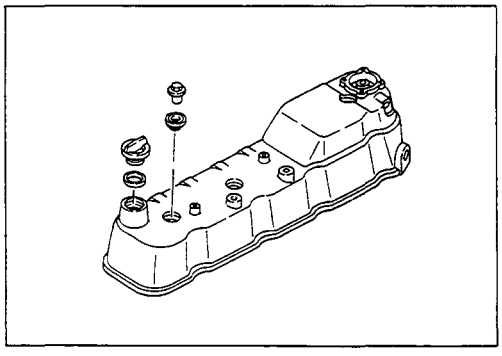

38. Cylinder Head Cover

1) Apply engine oil to the rocker arm and the valve spring.
2) Install the cylinder head cover gasket to the head cover.
   Check to see that the head cover gasket has no loose areas.
3) Tighten the cylinder head cover nuts to the specified torque.

Cylinder Head Cover Bolt Torque	kg·m(lb.ft/N·m)
1.3 ± 0.5 (9.4 ± 3.6/12.7 ± 4.9)	

4) Connect the PCV hose to the cylinder head cover.

INSTALLATION

EXTERNAL PARTS

These installation steps are based on the 4JB1T engine

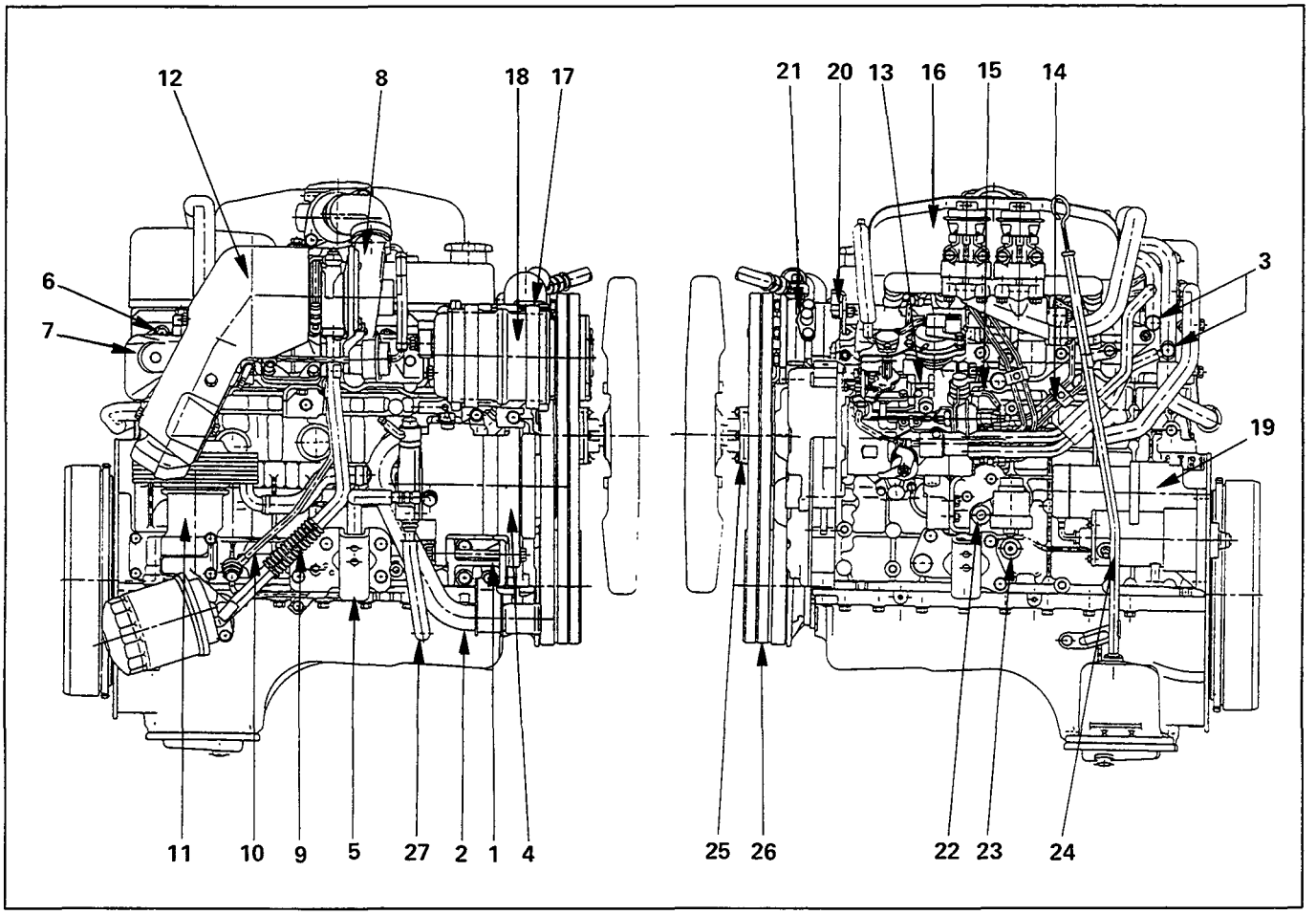

Installation Steps

- ▲ 1. Alternator bracket
- ▲ 2. Water inlet pipe
- ▲ 3. Heater pipe (Rear side)
- ▲ 4. Alternator and adjusting plate
- ▲ 5. Engine mounting bracket
- ▲ 6. Exhaust manifold
- 7. Exhaust manifold heat protector
- ▲ 8. Turbocharger
- ▲ 9. Turbocharger oil return pipe
- ▲ 10. Turbocharger oil feed pipe
- ▲ 11. Oil cooler with Oil filter
- 12. Turbocharger heat protector
- 13. Injection pump
- ▲ 14. Fuel injection pipe with clip
- 15. Fuel leak off pipe
- ▲ 16. Intake manifold
- ▲ 17. Compressor bracket
- ▲ 18. Compressor
- ▲ 19. Starter motor
- ▲ 20. Power steering oil pump bracket
- ▲ 21. Power steering oil pump
- 22. Water drain cock
- 23. Oil pressure warning switch and nipple
- 24. Oil level gauge guide tube
- 25. Cooling fan pulley
- 26. Cooling fan drive belt
- 27. Vacuum pipe

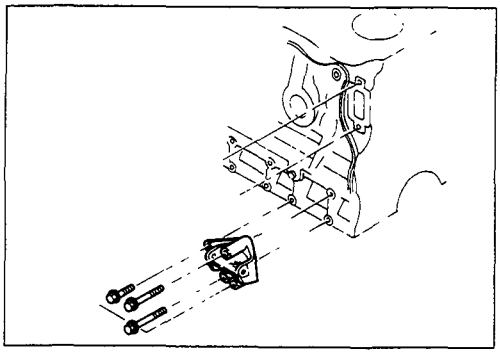

Important Operations

1. Alternator Bracket

Install the alternator bracket to the cylinder body and tighten the bracket bolts to the specified torque.

Bracket Bolt Torque	kg·m(lb.ft/N·m)
4.1 ± 0.6 (29.7 ± 4.3 / 40.2 ± 5.9)	

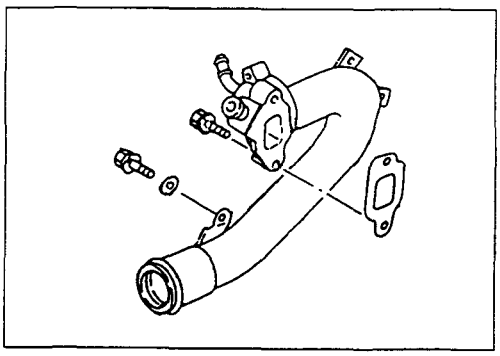

2. Water Inlet Pipe

1) Tighten the water inlet pipe bolts to the specified torque.

Suction Pipe Bolt Torque	kg·m(lb.ft/N·m)
1.9 ± 0.5 (13.7 ± 3.6 / 18.6 ± 4.9)	

3. Heater Pipe (Rear Side)

1) Install the heater pipe to the cylinder head.
2) Connect the oil cooler return hose and feed hose to the oil cooler.
3) Connect the water rubber hose to the heater pipe.

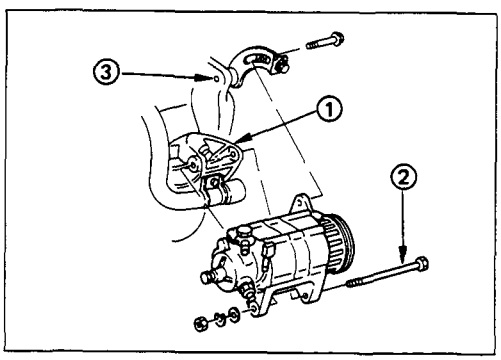

4. Alternator and Adjusting Plate

1) Install the alternator to the bracket ①.
2) Temporarily tighten the alternator bolt ② and adjusting plate bolts ③.
   The bolts will be finally tightened after installation of the cooling fan drive belt.

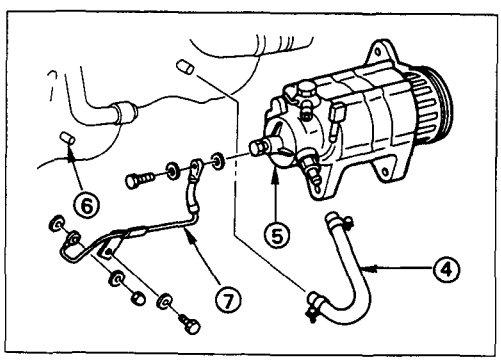

3) Connect the vacuum pump rubber hose ④ to the vacuum pump ⑤, and the oil pan ⑥.
4) Connect the vacuum oil pipe ⑦ to the vacuum pump, and the cylinder body.

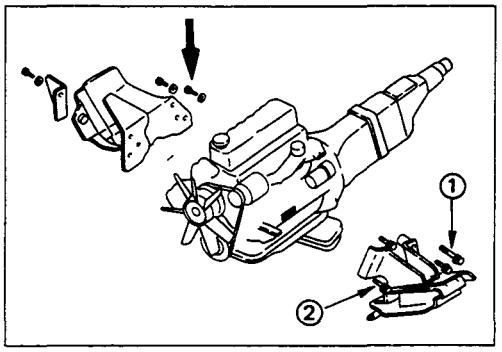

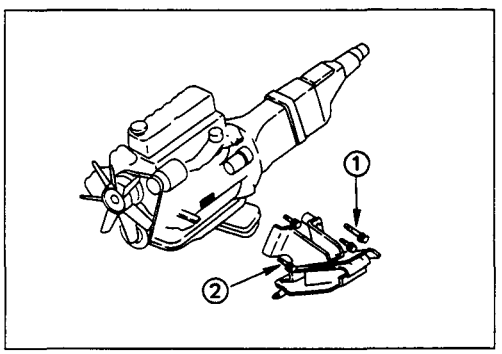

5. Engine Mounting Bracket

Install the engine mounting bracket to the cylinder body and tighten the bracket bolts to the specified torque.

Mounting Bracket Bolt Torque		kg·m(lb.ft/N·m)
Right Side	M10×1.25 (9T)	5.6 (40.5/54.9)
Left Side	② M10×1.25 (7T)	4.1 (30/40)
	② M14×1.50 (7T)	12 (86.7/118)

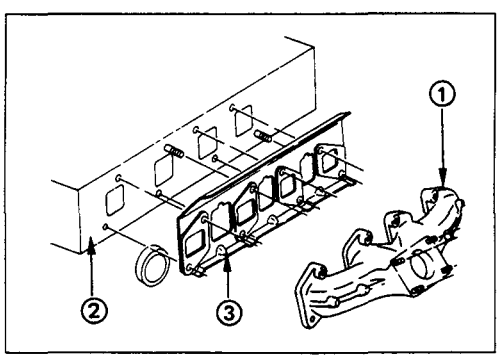

6. Exhaust Manifold

1) Install the exhaust manifold ① to the cylinder head ② with the manifold gasket ③.
2) Tighten the exhaust manifold bolts to the specified torque a little at a time.

Exhaust Manifold Bolt Torque	kg·m(lb.ft/N·m)
1.9 ± 0.5 (13.7 ± 3.6/18.6 ± 4.9)	

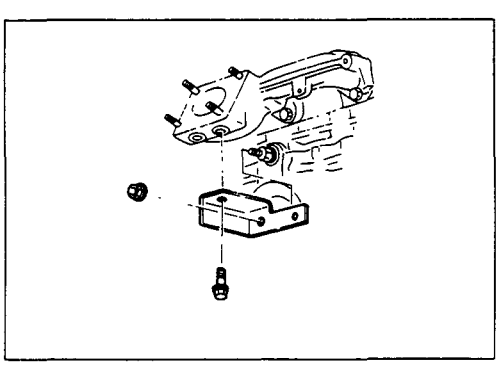

3) Install the exhaust manifold bracket to the manifold and the cylinder body.

Manifold Bracket Bolt Torque	kg·m(lb.ft/N·m)
1.9 ± 0.5 (13.7 ± 3.6/18.6 ± 4.9)	

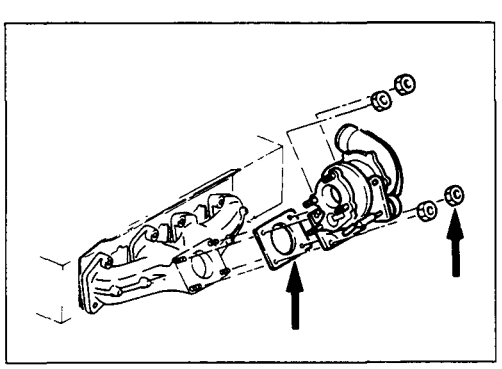

8. Turbocharger

1) Install the turbocharger and the gasket.
2) Temporarily tighten the turbocharger nuts at this time. They will be fully tightened after the installation of the turbocharger oil pipe.

   Always install new nuts and washers.

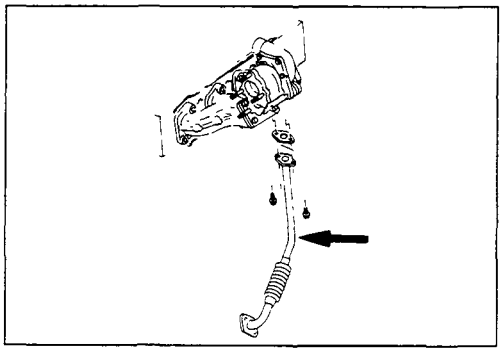

9. Turbocharger Oil Return Pipe

1) Install the oil return pipe with gasket to the turbocharger.
2) Tighten the turbocharger oil return pipe to the specified torque.

Turbocharger Oil Reutrn Pipe Torque	kg·m(lb.ft/N·m)
0.8 ± 0.2 (5.8 ± 1.4/7.8 ± 2.0)	

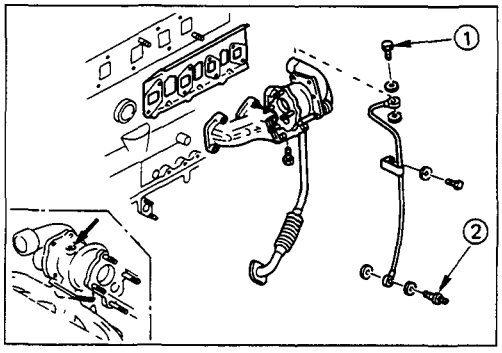

10. Turbocharger Oil Feed Pipe

1) Before installing the oil feed pipe, supply 100 — 130 cm^3 (6 — 8 in^3) of clean engine oil to the turbocharger center housing through the oil feed opening.
2) Turn the rotating assembly with your hand to throughly lubricate the internal parts.
3) Tighten the oil feed pipe to the specified torque.

Turbocharger Oil Feed Pipe Joint Bolt Torque	kg·m(lb.ft/N·m)
① M10 × 1.5	2.25 ± 0.25 (16.3 ± 1.8/22.05 ± 2.45)
② M14 × 1.5	3.0 ± 0.25 (21.7 ± 1.8/29.40 ± 2.45)

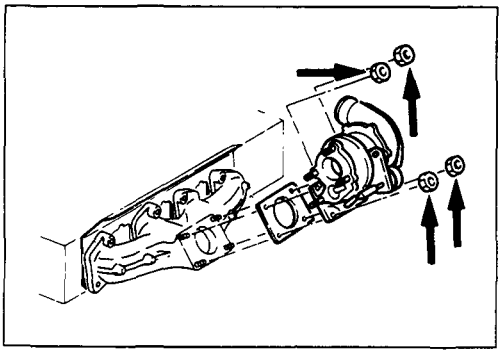

4) Tighten the turbocharger nut to the specified torque.

Turbocharger Nut Torque	kg·m(lb.ft/N·m)
2.7 ± 0.5 (19.5 ± 3.6/26.5 ± 4.9)	

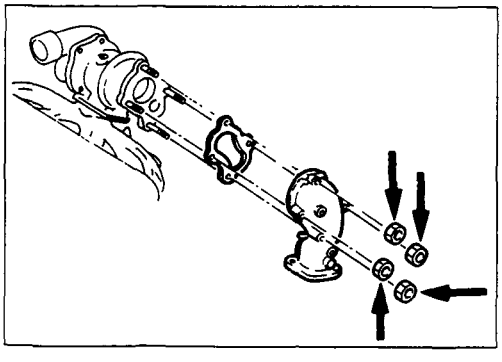

Exhaust Adapter

Install the exhaust adapter with gasket and tighten the adapter bolts to the specified torque.

Adapter Bolt Torque	kg·m(lb.ft/N·m)
2.7 ± 0.5 (19.5 ± 3.6/26.5 ± 4.9)	

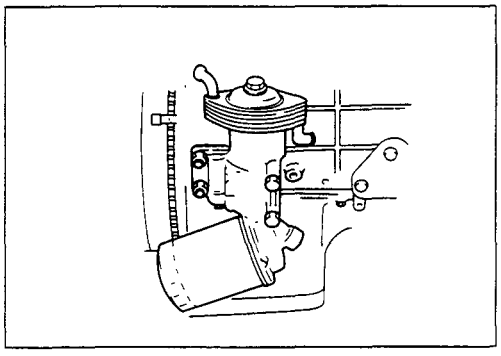

11. Oil Cooler with Oil Filter

1) Install the O-ring to the oil filter flange groove.
2) Tighten the oil filter and oil cooler to the specified torque.

Oil Filter Flange Bolt Torque	kg·m(lb.ft/N·m)
1.9 ± 0.5 (13.7 ± 3.6 / 18.6 ± 4.9)	

3) Lightly oil the O-ring of oil filter cartridge.
4) Turn in the new oil filter cartridge by hand until the sealing face is fitted again the O-ring.
5) Use the filter wrench to turn in the oil filter and additional one and 1·1/8 turns.
6) Start the engine and check for oil leakage from oil filter.

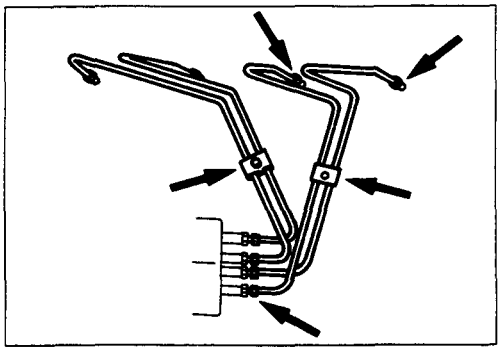

14. Fuel Injection Pipe with Clip

1) Temporarily tighten the injection pipe sleeve nut.
2) Set the clip in the illustrated position.

Note:

Make absolutely sure that the clip is correctly positioned.

An improperly positioned clip will result in injection pipe breakage and fuel pulsing noise.

3) Tighten the injection pipe sleeve nut to the specified torque.

Injection Pipe Sleeve Nut Torque	kg·m(lb.ft/N·m)
3 ± 1 (21.7 ± 7.2 / 29.4 ± 9.8)	

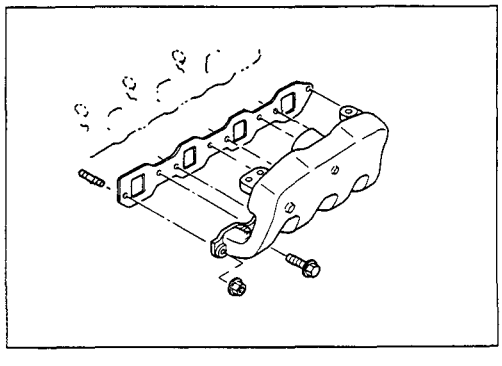

16. Intake Manifold

1) Install the manifold gasket to the intake manifold.
2) Connect the intake rubber hose to the intake duct.
3) Tighten the intake manifold bolts and the flange nuts to the specified torque.

Intake Manifold Bolt Torque	kg·m(lb.ft/N·m)
1.9 ± 0.5 (13.7 ± 3.6 / 18.6 ± 4.9)	

Intake Manifold Flange Nut Torque	kg·m(lb.ft/N·m)
2.4 ± 0.5 (17.3 ± 3.6 / 23.5 ± 4.9)	

4) Connect the PCV hose to the cylinder head cover.

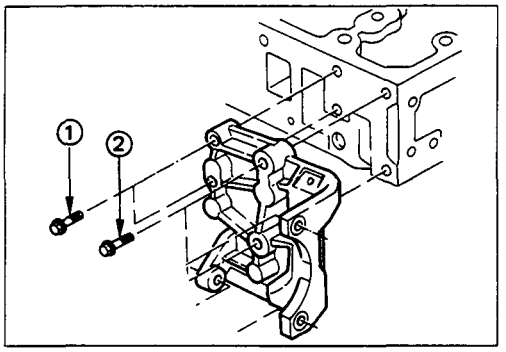

17. Compressor Bracket

1) Install the compressor bracket to the cylinder head.
2) Tighten the bracket bolts to the specified torque.

Bracket Bolt Torque	kg·m(lb.ft/N·m)
① M 8 X 1.25	1.9 ± 0.5 (13.7 ± 3.6 / 18.6 ± 4.9)
② M10 X 1.25	3.8 ± 1.0 (27.5 ± 7.2 / 37.2 ± 9.8)

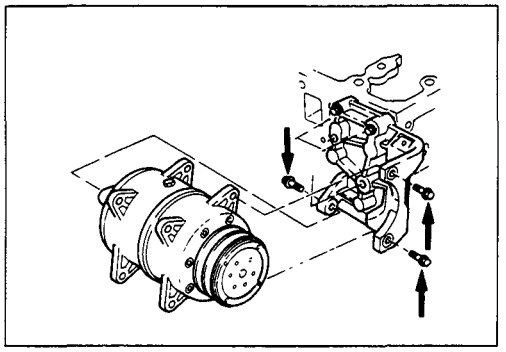

18. Compressor

1) Install the compressor to the compressor bracket.
2) Tighten the compressor bolts to the specified torque.

Compressor Bolt Torque	kg·m(lb.ft/N·m)
3.8 ± 1.0 (27.5 ± 7.2 / 37.2 ± 9.8)	

19. Starter Motor

Tighten the starter motor bolts to the specified torque.

Starter Motor Bolt Torque	kg·m(lb.ft/N·m)
7.0 ± 1.0 (50.6 ± 7.2 / 68.6 ± 9.8)	

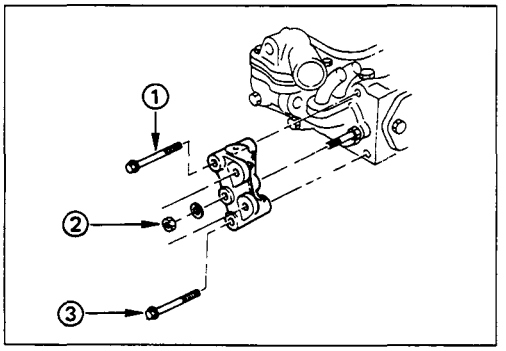

20. Power Steering Oil Pump Bracket

21. Power Steering Oil Pump

1) Install the oil pump bracket to the cylinder head.
2) Tighten the pump bracket nut and bolts to the specified torque.

Oil Pump Bracket Nut and Bolt Torque	kg·m(lb.ft/N·m)
① M10 X 1.25 (7T)	3.75 ± 0.95 (27.1 ± 6.9 / 36.75 ± 9.31)
② M 8 X 1.25 (7T)	1.75 ± 0.55 (12.7 ± 4.0 / 17.75 ± 5.39)
③ M 8 X 1.25 (4T)	1.30 ± 0.50 (9.4 ± 3.6 / 12.74 ± 4.90)

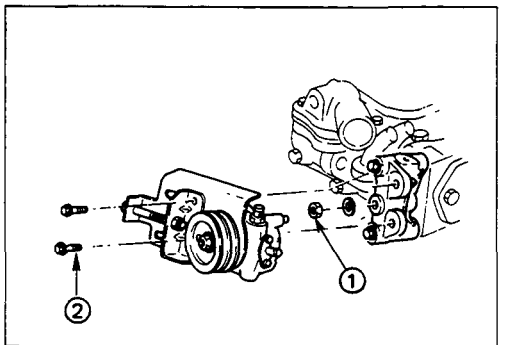

3) Install the oil pump to the bracket.
4) Temporarily tighten the oil pump nut ① and bolts ②. The nut and bolts will be finally tightened after installation of the drive belt.

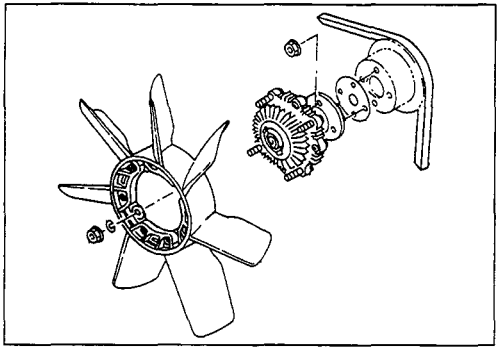

25. Cooling Fan Pulley

1) Install the cooling fan pulley to the water pump with spacer.
2) Tighten the cooling fan pulley bolts to the specified torque.

Cooling Fan Pulley Bolt Torque	kg·m(lb.ft/N·m)
0.8 ± 0.2 (5.8 ± 1.4 / 7.8 ± 2.0)	

26. Cooling Fan Drive Belt

Install the fan drive belt and adjust the belt tension referring **SERVICING** of this section.

LUBRICATING SYSTEM

MAIN DATA AND SPECIFICATIONS

Engine model		4JA1	4JB1T
Oil pump type		Gear	
Oil pressure switch operating pressure	kg/cm²(psi/kPa)	0.2 — 0.5 (2.8 — 7.1/19.6 — 49.0)	
Oil filter type		Full flow with cartridge paper element	
Relief valve opening pressure	kg/cm²(psi/kPa)	4.3 — 4.7 (61.1 — 66.8/ 421.4 — 460.6)	5.7 — 6.3 (82.5 — 89.5/ 558.6 — 617.4)
Safety valve opening pressure	kg/cm²(psi/kPa)	0.8 — 1.2 (11.38 — 17.07/78.9 — 117.6)	
Oil cooler type		Water-cooled	
Safety valve opening pressure	kg/cm²(psi/kPa)	2.3 — 2.7 (32.7 — 38.4/225.4 — 264.6)	

4JB1T : 4JB1 Engine with turbocharger.

GENERAL DESCRIPTION

LUBRICATING OIL FLOW

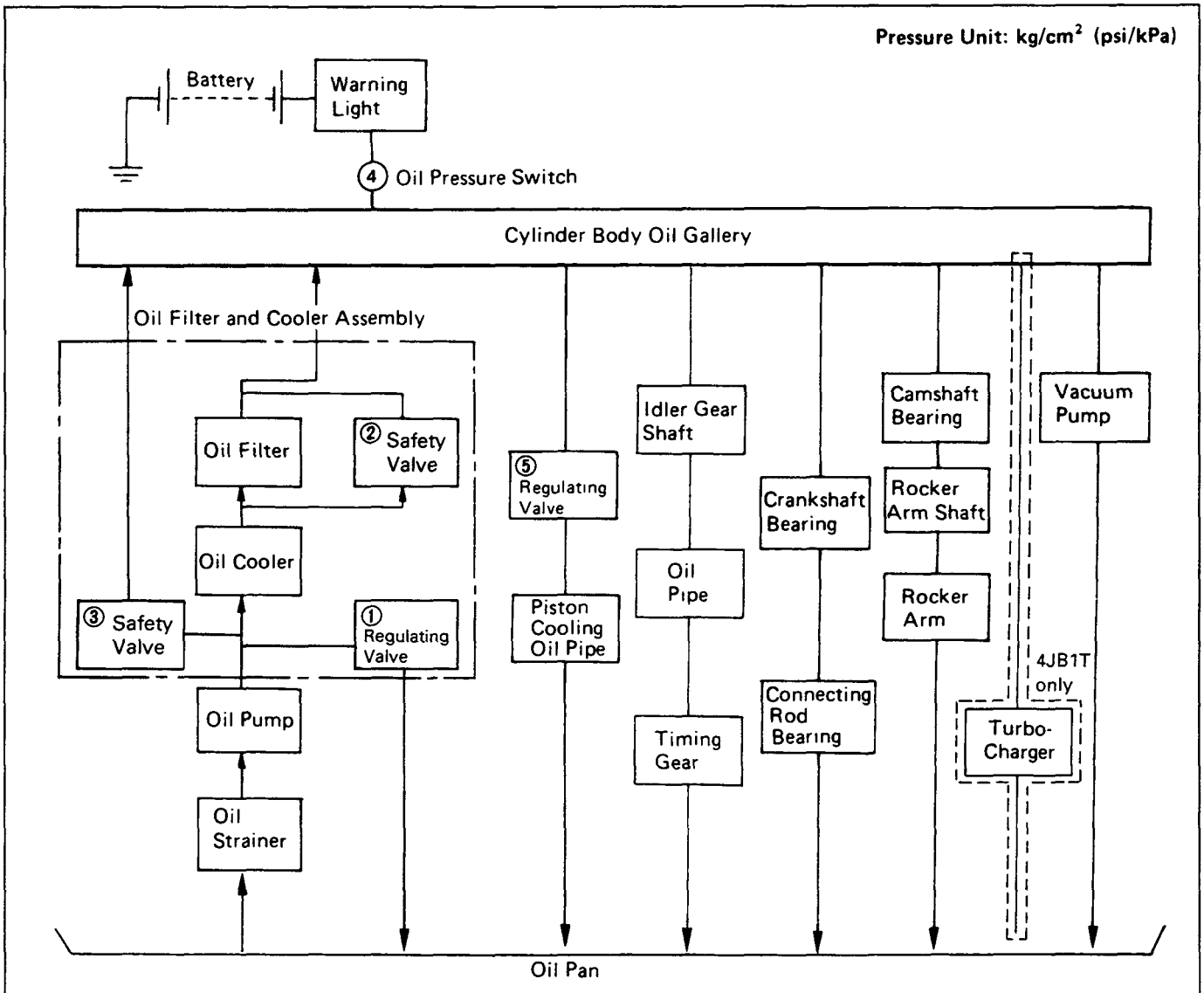

① Oil filter regulating valve opening pressure : 5.7 – 6.3 (82.5 – 89.5/558.6 – 617.4)
② Oil filter safety valve opening pressure : 0.8 – 1.2 (11.38 – 17.07/78.9 – 117.6)
③ Oil cooler safety valve opening pressure : 2.3 – 2.7 (32.7 – 38.4/225.4 – 264.6) For 4JA1
: 3.3 – 3.7 (46.9 – 52.6/323 – 363) For 4JB1T
④ Oil pressure switch opening pressure : 0.2 –0.5 (2.8 – 7.1/19.6 – 49.0)
⑤ Engine regulating valve : 2.3 – 2.7 (32.7 – 38.4/225.4 – 264.6)

The 4J series engine has a full flow type lubricating system.

Lubricating oil is pumped from the oil pump to the cylinder body oil gallery through the oil cooler and the oil filter. It is then delivered to the vital parts of the engine from the cylinder body oil gallery.

Oiling jets installed on the cylinder body spray engine oil to the piston backside faces to achieve maximum piston cooling effect.

OIL PUMP AND OIL FILTER

OIL PUMP	OIL FILTER AND OIL COOLER	
	For 4JA1	For 4JB1T
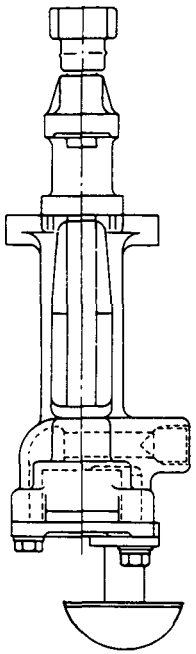	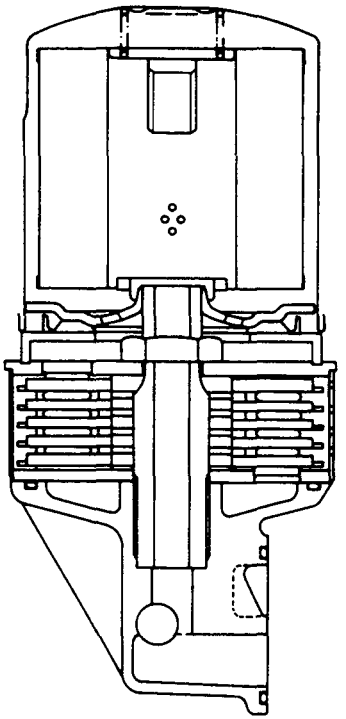	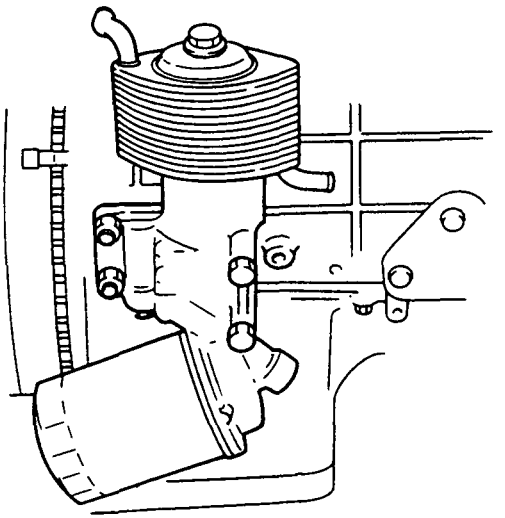

The 4J series engine is equipped with a gear type oil pump.

The oil filter and the water cooled oil cooler integrated a single unit to increase the cooling effect.

OIL PUMP

DISASSEMBLY

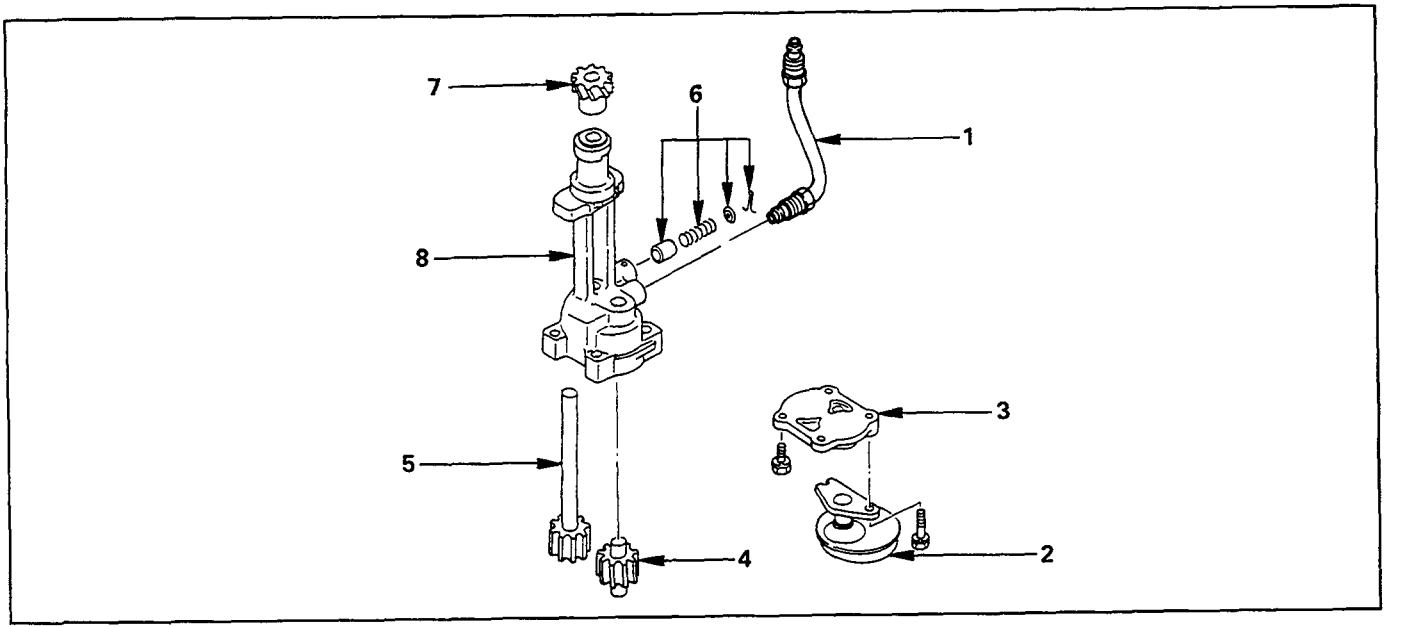

Disassembly Steps

1. Oil pipe
2. Strainer
3. Pump cover
4. Driven gear with bush
5. Driven gear
6. Relief valve asm.
7. Pinion gear
8. Oil pump body

INSPECTION AND REPAIR

Make the necessary adjustments, repairs, and part replacements if excessive wear or damage is discovered during inspection.

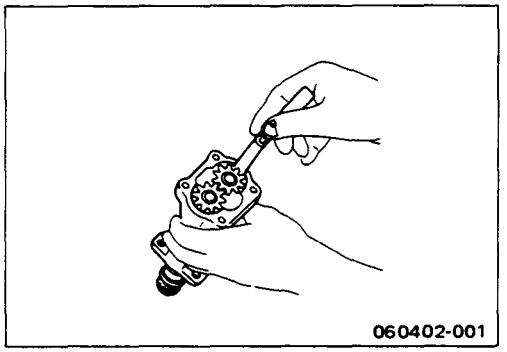

Gear Teeth and Body Inner Wall Clearance

Use a feeler gauge to measure the clearance between the gear teeth and the body inner wall.

If the clearance between the gear teeth and the body inner wall exceeds the specified limit, either the gear or the body must be replaced.

Gear Teeth and Body Inner Wall Clearance mm(in)

Standard	Limit
0.14 (0.0055)	0.20 (0.0079)

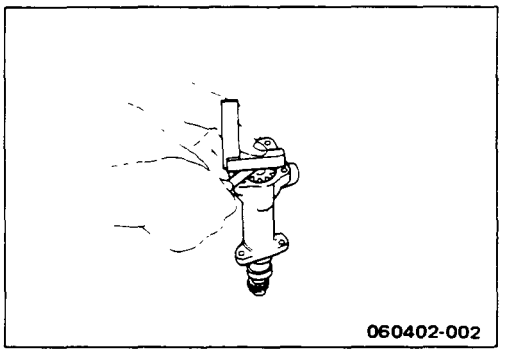

Gear and Body Clearance

Use a feeler gauge to measure the clearance between the body and the gear.

If the clearance between the gear and the body exceeds the specified limit, the body must be replaced.

Gear and Body Clearance mm(in)

Standard	Limit
0.06 (0.024)	0.15 (0.0059)

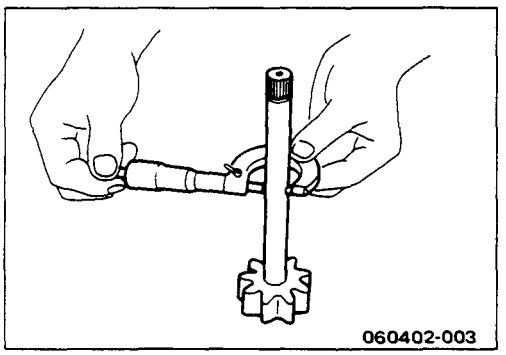

Drive Shaft and Oil Pump Body Clearance

Use a micrometer to measure the drive shaft outside diameter.

Use an inside dial indicator to measure the pump body inside diameter.

If the clearance between the drive shaft and the oil pump body exceeds the specified limit, the oil pump assembly must be replaced.

Drive Shaft and Oil Pump Body Clearance mm(in)

Standard	Limit
0.04 (0.0016)	0.20 (0.0079)

REASSEMBLY

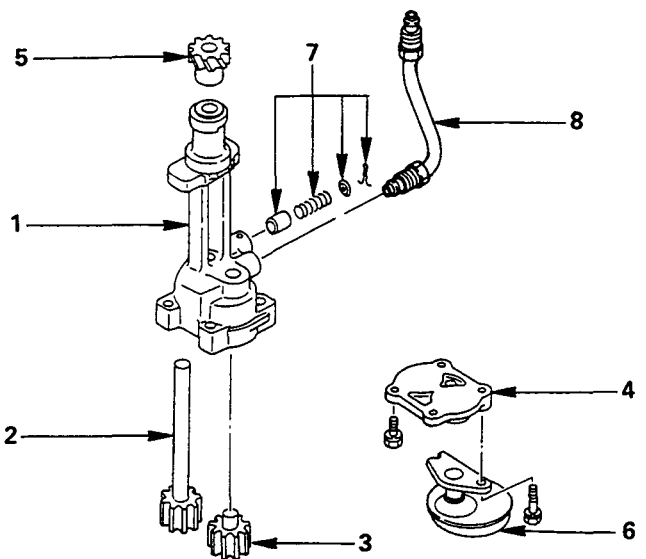

Reassembly Steps

1. Oil pump body
2. Drive gear
3. Driven gear
4. Pump cover
5. Pinion gear
6. Strainer
7. Relief valve asm.
8. Oil pipe

OIL FILTER AND OIL COOLER

DISASSEMBLY

For 4JA1

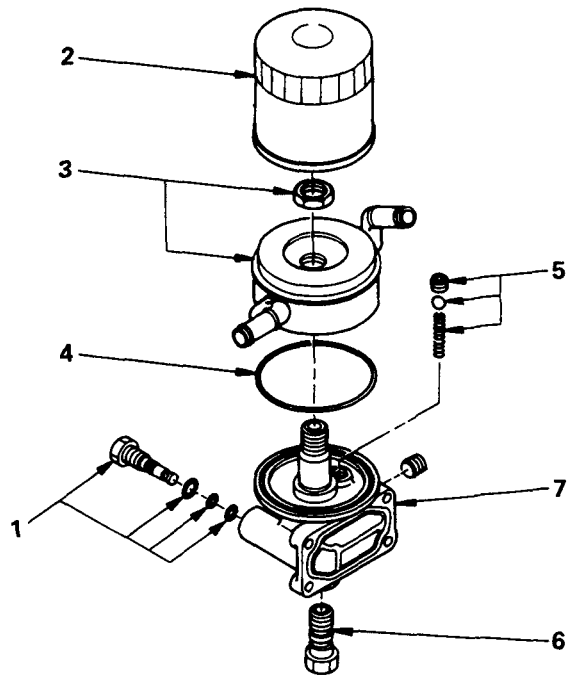

060501-002

Disassembly Steps

1. Drain plug
2. Cartridge oil filter
3. Oil cooler
4. O-ring
5. Safety valve
6. Relief valve
7. Oil filter body

DISASSEMBLY

For 4JB1T

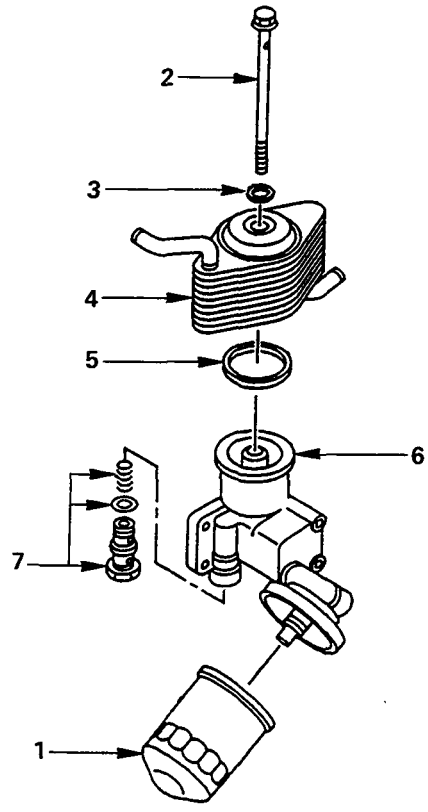

Disassembly Steps

1. Oil filter cartridge
2. Bolt
3. Gasket
4. Oil cooler
5. Gasket
6. Body
7. Relief valve

INSPECTION AND REPAIR

Make the necessary adjustments, repairs, and part replacements if excessive wear or damage is discovered during inspection.

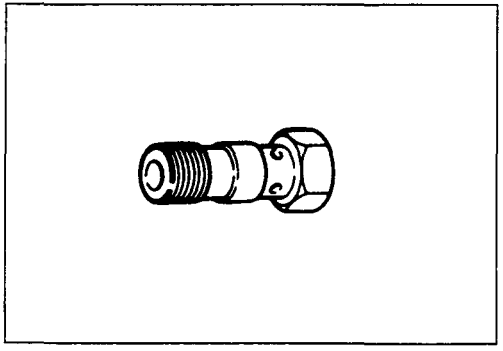

Relief Valve

1. Attach an oil pressure gauge to the oil gallery near the oil filter.
2. Start the engine to check the relief valve opening pressure.

Relief Valve Opening Pressure	kg/cm²(psi/kPa)
4JA1	4.3–4.7 (61.1–66.8/421.4–460.6)
4JB1T	5.7–6.3 (82.5–89.5/558.6–617.4)

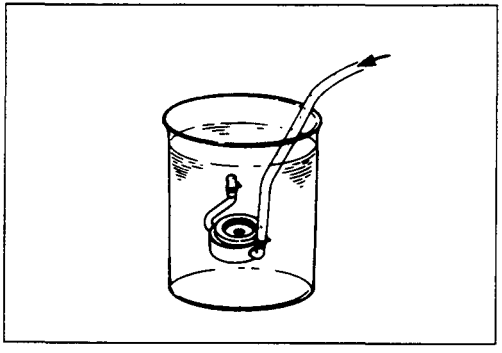

Oil Cooler

Water Leakage at Water Passage

1. Plug one side of the oil cooler water passage.
2. Submerge the oil cooler in water.
3. Apply compressed air (2 kg/cm² (28 psi/200 kPa)) to the other side of the oil cooler water passage.

   If air bubbles rise to the surface, there is water leakage.

REASSEMBLY

For 4JA1

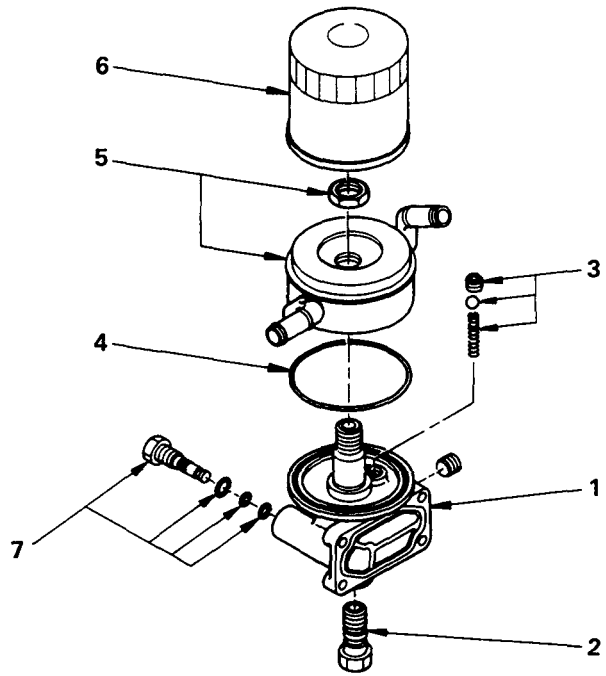

060503-007

Reassembly Steps

1. Oil filter body
2. ▲ Relief valve
3. Safety valve
4. O-ring
5. ▲ Oil cooler
6. ▲ Oil filter cartridge
7. ▲ Drain plug

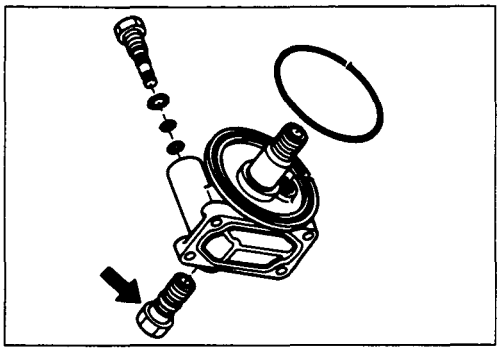

Important Operations

2. Relief Valve

Tighten the relief valve to the specified torque.

Relief Valve Torque	kg·m(lb.ft/N·m)
3.0 ± 0.5 (21.7 ± 3.6/29.4 ± 4.9)	

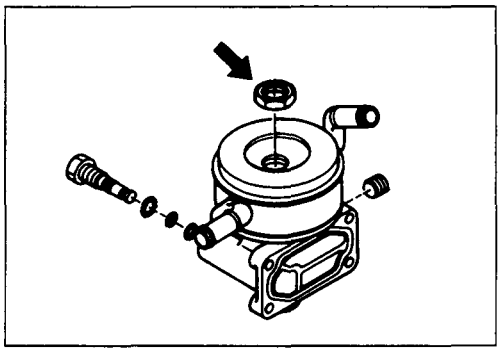

5. Oil Cooler

1) Align the oil filter holes with the body knock pins at installation.
2) Tighten the oil cooler nut to the specified torque.

Oil Cooler Nut Torque	kg·m(lb.ft/N·)
3.0 ± 0.5 (21.7 ± 3.6/29.4 ± 4.9)	

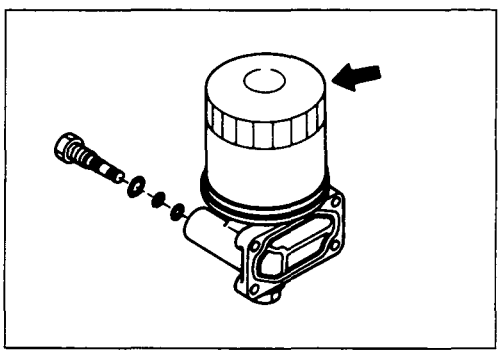

6. Oil Filter Cartridge

1) Apply engine oil to the O-ring.
2) Turn in the cartridge oil filter until the filter sealing face makes contact with the O-ring.
3) Turn in the cartridge oil filter an additional one and 1/8 of a turn.

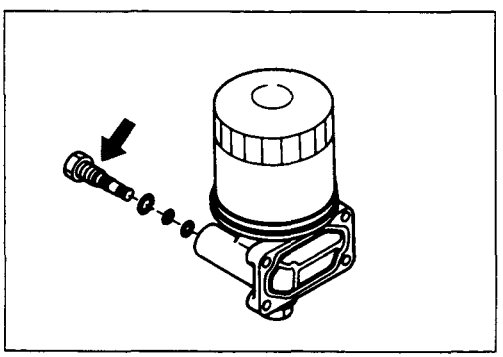

7. Drain Plug

Tighten the drain plug to the specified torque.

Drain Plug Torque	kg·m(lb.ft/N·m)
2.5 ± 0.5 (18.1 ± 3.6/24.5 ± 4.9)	

REASSEMBLY

For 4JB1T

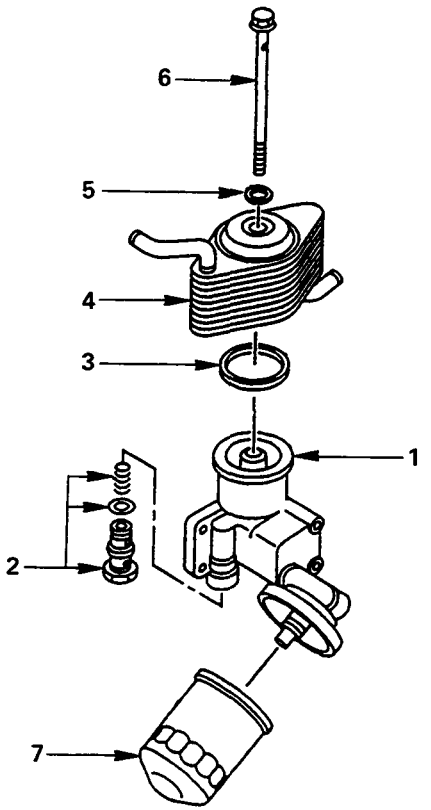

Reassembly Steps

1. Body
▲2. Relief valve
3. Gasket
▲4. Oil cooler
5. Gasket
▲6. Bolt
▲7. Oil filter cartridge

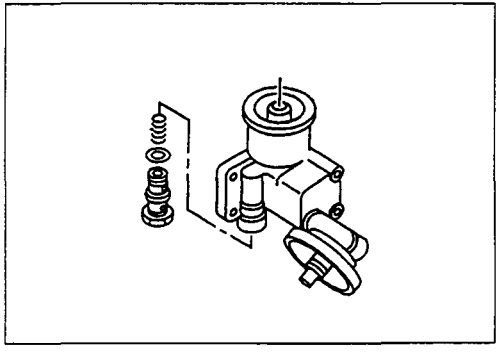

2. Relief Valve

Tighten the safety valve to the specified torque.

Safety Valve Torque	kg·m(lb.ft/N·m)
0.3 ± 0.05 (4.3 ± 0.7 / 29.4 ± 4.9)	

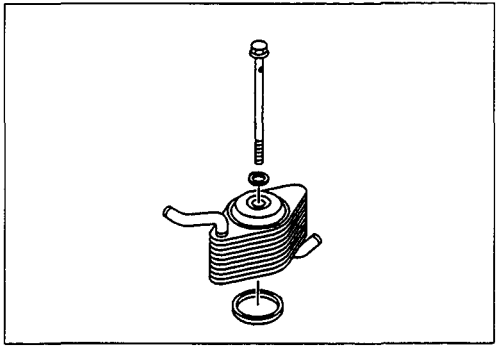

4. Oil Cooler

6. Bolt

Tighten Bolt with gaskets and oil cooler to the specified torque.

Bolt Torque	kg·m(lb.ft/N·m)
3.0 ± 0.5 (21.7 ± 3.6 / 29.4 ± 4.9)	

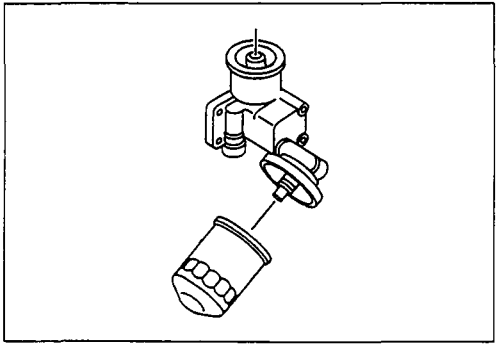

7. Oil Filter Cartridge

1) Apply engine oil to the O-ring.
2) Tighten the oil filter cartridge to the specified torque.

Oil Filter Cartridge Torque	kg·m(lb.ft/N·m)
0.2 ± 0.02 (2.8 ± 0.28 / 19.6 ± 2.0)	

DELTA OPEL ISUZU SUZUKI

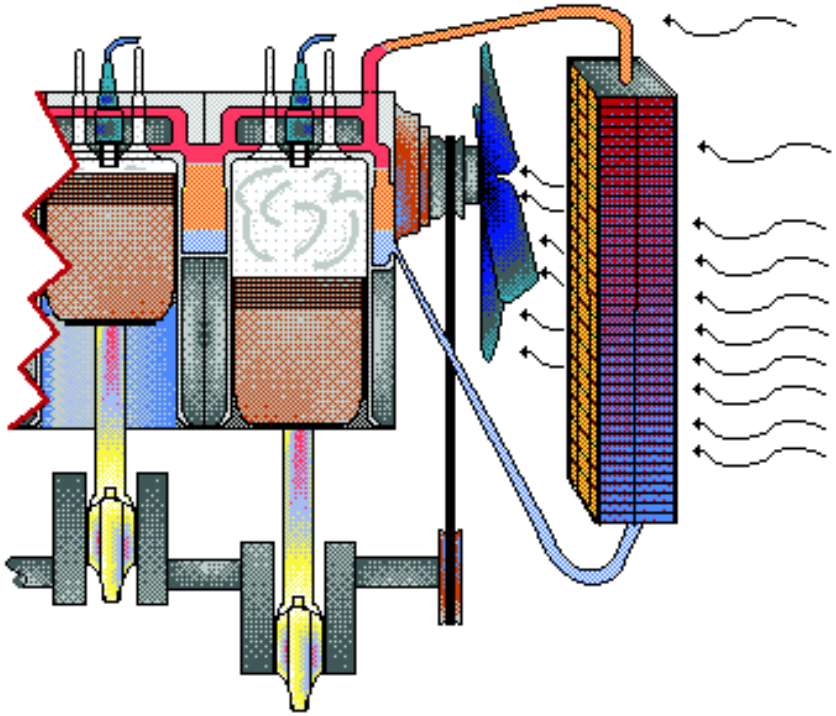

KB TF 140
Cooling System

ISUZU

- Specs.
- Water Pump
- Thermostat
- Fan

SECTION 6B
ENGINE COOLING

TABLE OF CONTENTS

PAGE

Main Data and Specifications 6B– 2
General Description 6B– 3
Water Pump 6B– 5
  Removal and Installation 6B– 5
  Disassembly 6B– 7
  Inspection and Repair 6B– 8
  Reassembly 6B– 9
Thermostat 6B–11
  Removal and Installation 6B–11
  Inspection and Repair 6B–12
Fan Clutch with Cooling Fan 6B–13
  Inspection and Repair 6B–13

MAIN DATA AND SPECIFICATIONS

Item	Description
Water pump type	Centrifugal
Pump to crankshaft speed ratio (To 1)	1.1
Delivery volume lit (US/UK gal)/min	100 (26.3/22.2)
Pump speed at 3000 rpm	
Water temperature at 30°C (86°F)	
Pump bearing type	Double row shaft
Thermostat type	Wax pellet with jiggle valve
Valve initial opening temperature °C(°F)	82 (180)
Valve full opening temperature °C(°F)	95 (203)
Valve lift at fully open position mm(in)	9.5 (0.37)

GENERAL DESCRIPTION

COOLANT FLOW

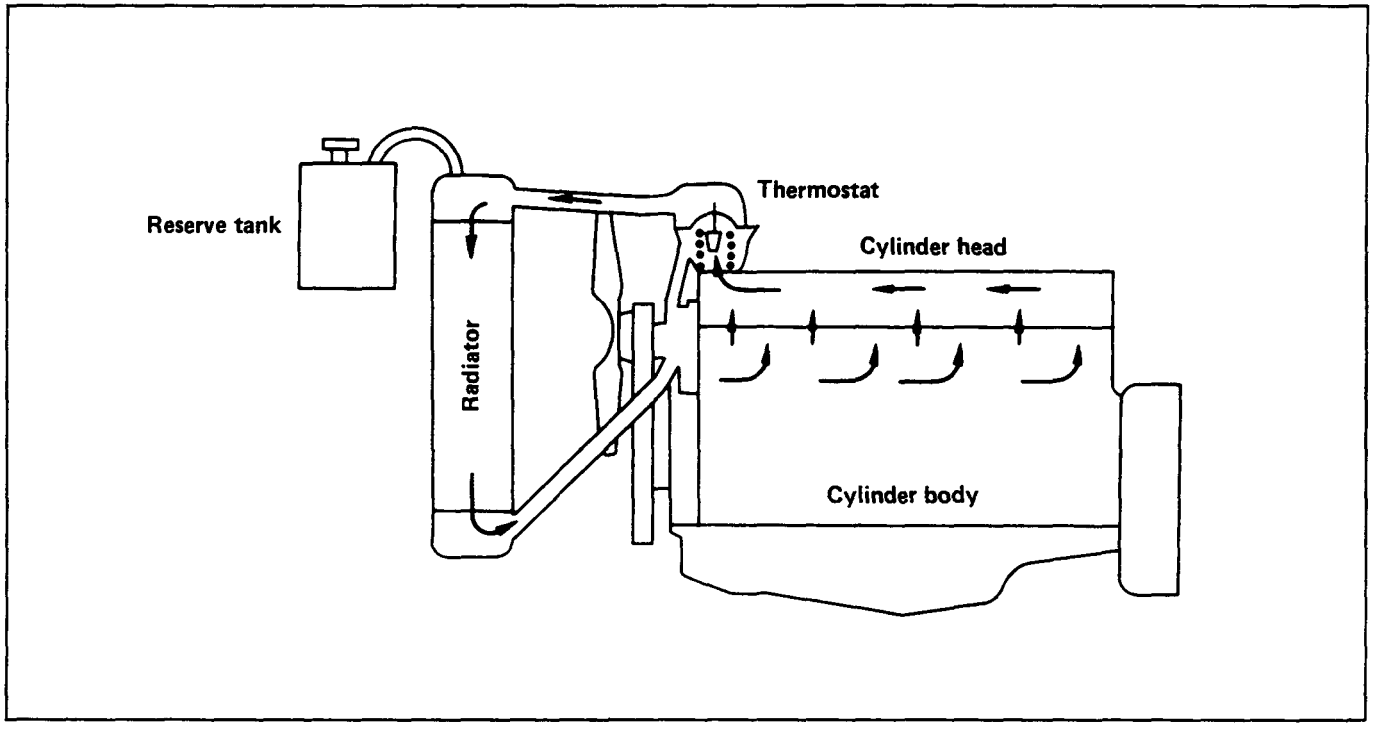

The engine cooling system consists of the radiator, the water pump, the cooling fan, and the thermostat.

To quickly increase cold engine coolant temperature for smooth engine operation, the coolant is circulated by the water pump and thermostat through the bypass hose and back to the cylinder body. The coolant does not circulate through the radiator.

When the coolant temperature reaches specified value, the thermostat will begin to open and a gradually increasing amount of coolant will circulate through the radiator.

The thermostat will be fully open when the coolant temperature reaches specified value. All of the coolant is now circulating through the radiator for effective engine cooling.

WATER PUMP

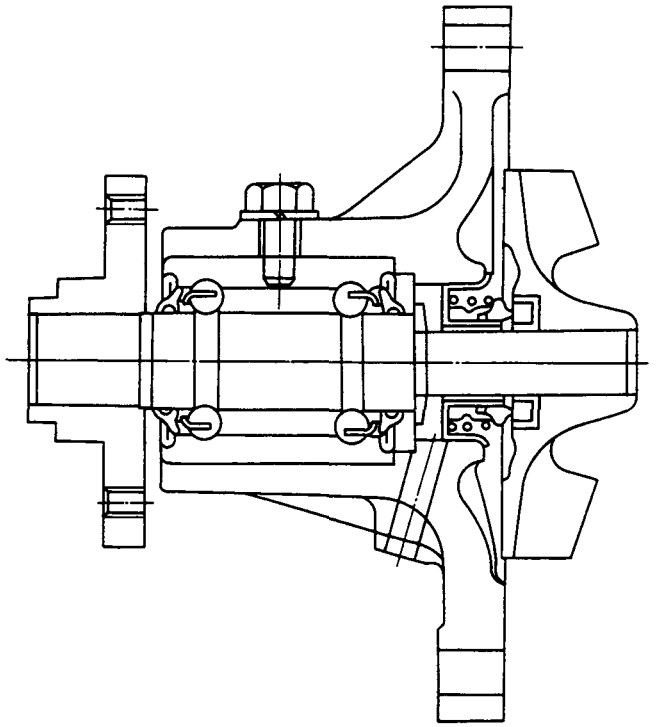

A centrifugal type water pump forcefully circulates the coolant through the cooling system.

THERMOSTAT

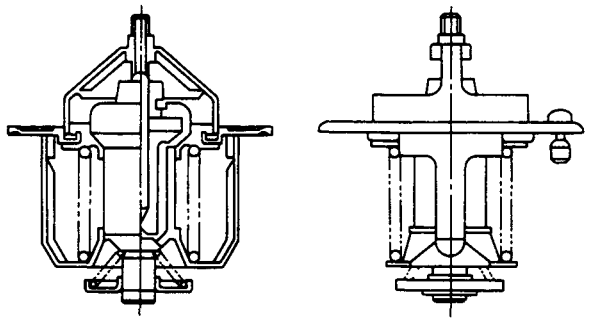

A wax pellet type thermostat is used.
The jiggle valve accelerates engine warm-up.

WATER PUMP

REMOVAL AND INSTALLATION

Read this Section carefully before performing any removal and installation procedure. This Section gives you important points as well as the order of operation. Be sure that you understand everything in this Section before you begin.

Important Operations – Removal

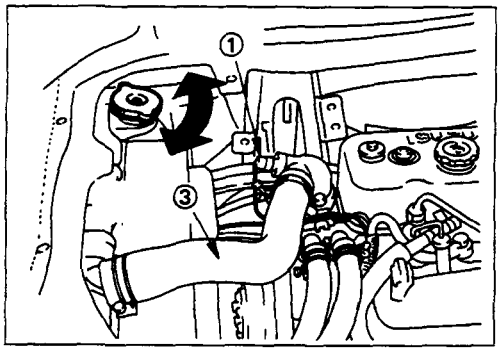

Radiator Upper Hose

1. Disconnect the wiring harness ①.
2. Partially drain the engine coolant.
3. Remove the radiator upper hose ③.

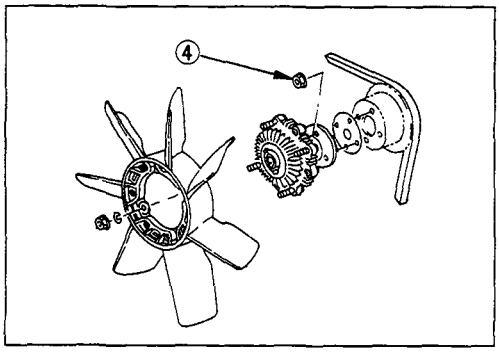

Fan and Fan Clutch

1. Loosen the fan clutch nuts ④.
2. Remove the fan together with the fan clutch.
   Take care not to damage the radiator core.

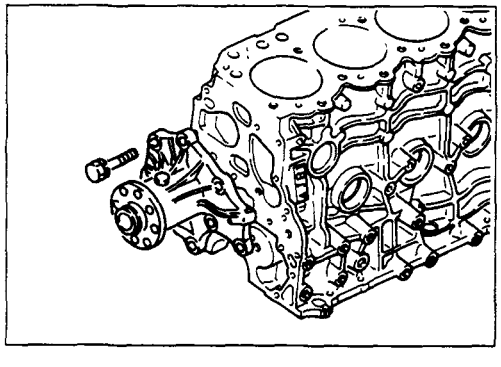

Water Pump

1. Remove the water pump bolts.
2. Remove the water pump.

Important Operations — Installation

Follow the removal procedure in the reverse order to perform the installation procedure. Pay careful attention to the important points during the installation procedure.

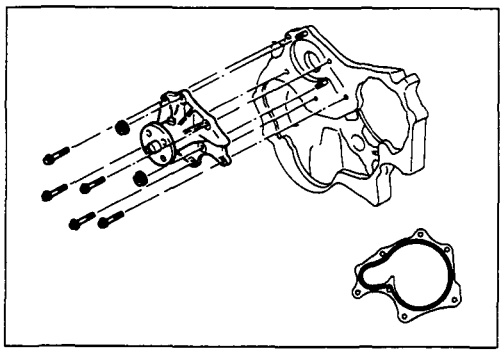

Water Pump

1) Apply the recommended liquid gasket or its equivalent to the water pump at the position shown in the illustration.

   Do not apply an excessive amount of liquid gasket.

2) Tighten the water pump bolts to the specified torque.

Water Pump Bolt Torque	kg·m(lb·ft/N·m)
2.0 ± 0.5 (14.5 ± 3.6/19.6 ± 4.9)	

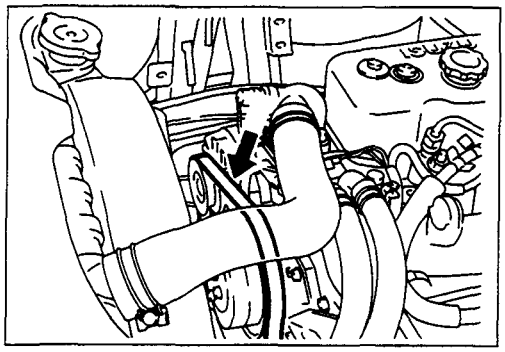

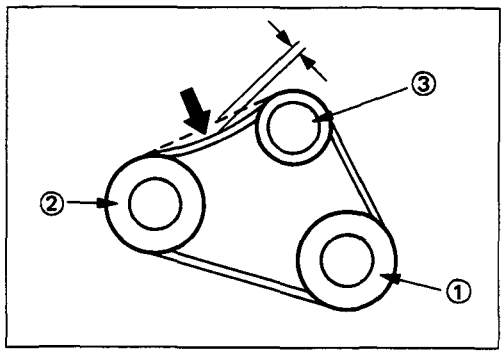

Cooling Fan Drive Belt

1. Install the cooling fan drive belt.
2. Apply tension to the cooling fan drive belt by moving the alternator.
3. Apply a force of 10 kg (22 lb/98 N) to the drive belt mid-portion to check the drive belt deflection.

Cooling Fan Drive Belt Deflection	mm(in)
10 (0.4)	

① Crankshaft damper pulley
② Alternator pulley
③ Cooling fan drive pulley

4. Tighten the remaining water pump bolt to the specified torque.

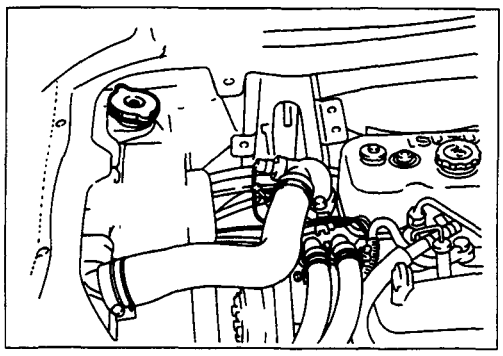

Radiator Upper Hose
Heater Hose

1. Connect the radiator upper hose to the water outlet pipe.
2. Replenish the engine coolant.
3. Make sure the wiring harness is properly connected.
4. Start the engine and allow it to warm up.
5. Check the temperature gauge operation.

DISASSEMBLY

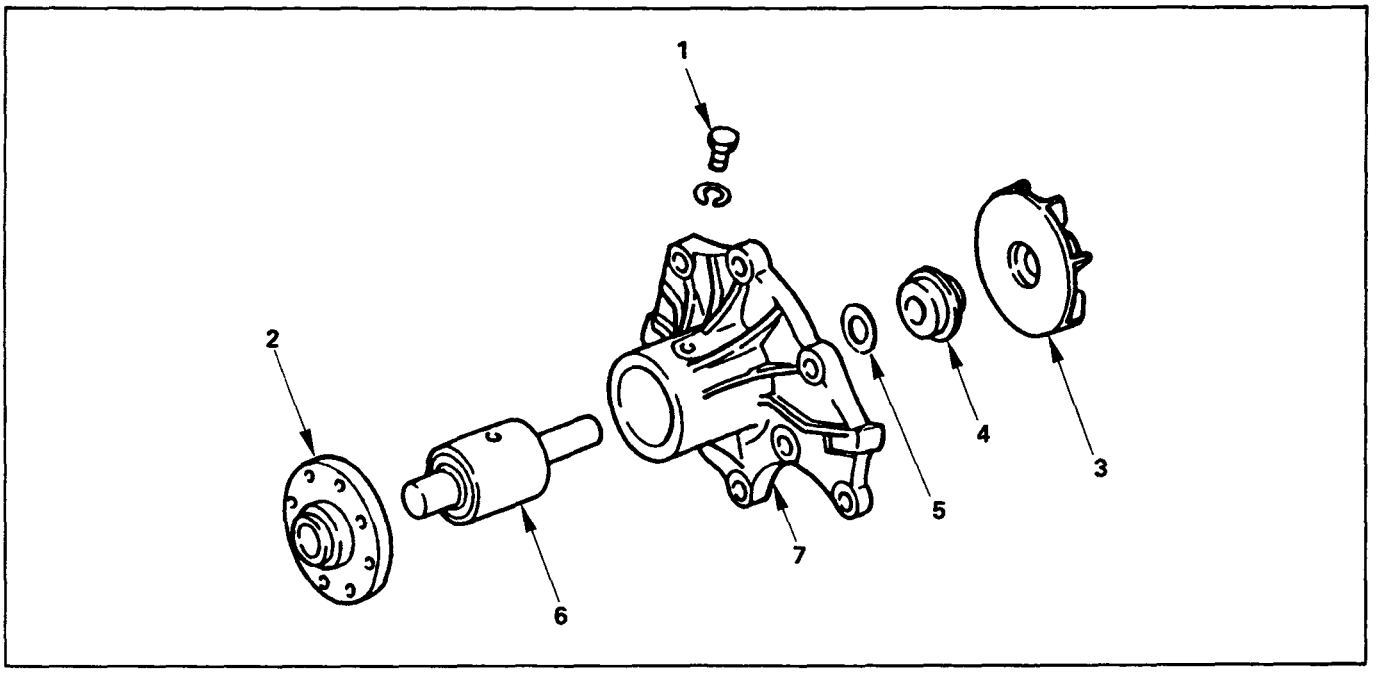

Disassembly Steps

1. Set screw
▲ 2. Cooling fan center
▲ 3. Impeller
▲ 4. Seal unit
5. Thrower
▲ 6. Bearing unit
7. Water pump body

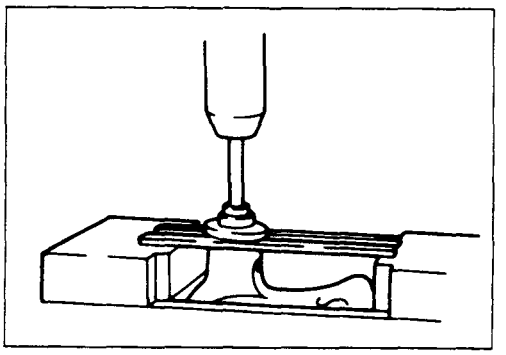

Important Operations

2. Cooling Fan Center

Remove the fan center with a bench press and a bar.

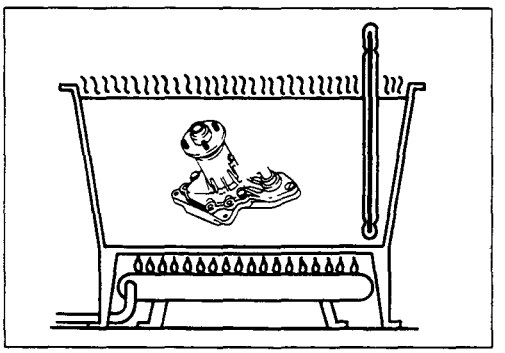

3. Impeller

4. Seal Unit

6. Bearing Unit

1) Heat the pump body in hot water (80 – 90°C/176 – 194°F).

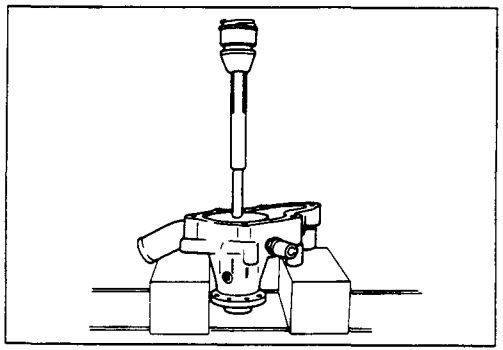

2) Remove the impeller, the seal unit, and the bearing unit, and the bearing unit with a bench press and a bar.

Note:

Do not drive out the impeller with a hammer. Damage to the impeller will result.

INSPECTION AND REPAIR

Make the necessary adjustments, repairs, and part replacements if excessive wear or damage is discovered during inspection.

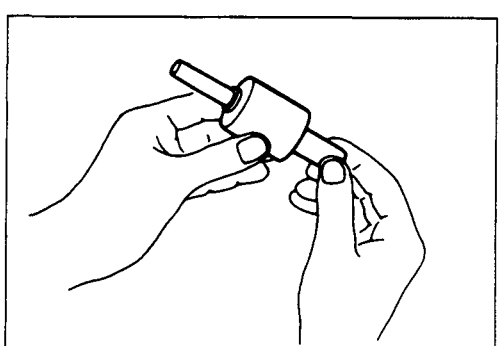

Bearing Unit

Check the bearing for abnormal noise, binding, and other abnormal conditions.

REASSEMBLY

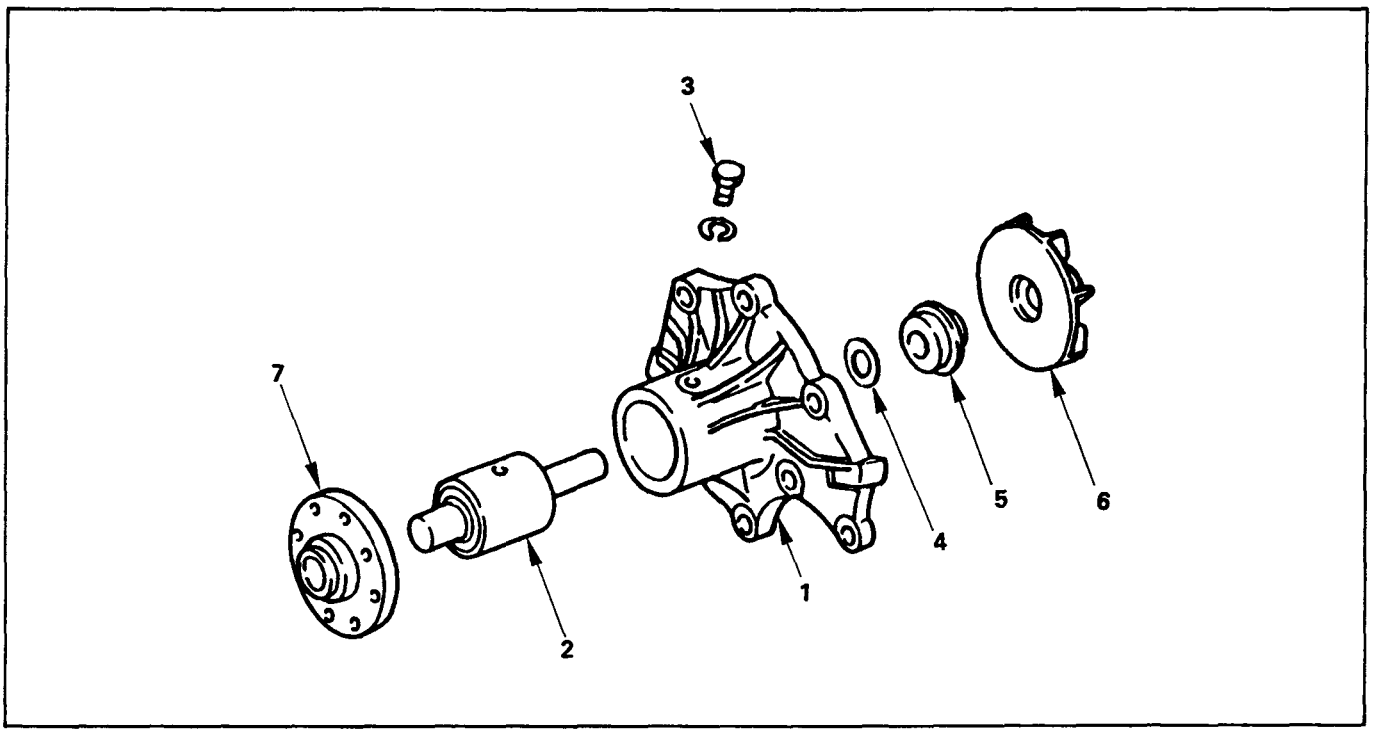

Reassembly Steps

1. Water pump body
▲ 2. Bearing unit
▲ 3. Set screw
4. Thrower
▲ 5. Seal unit
▲ 6. Impeller
▲ 7. Cooling fan center

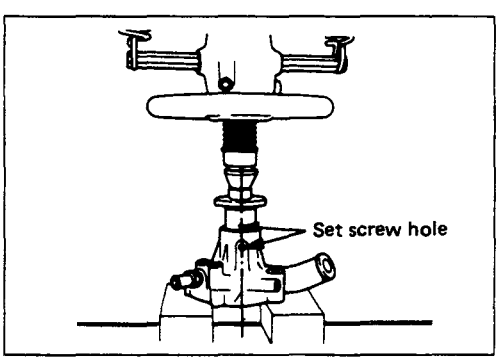

Important Operations

2. Bearing Unit

3. Set Screw

1) Align the bearing set screw hole with the pump body set screw hole.
2) Press the bearing unit into place.
3) Secure the bearing with the set screw.

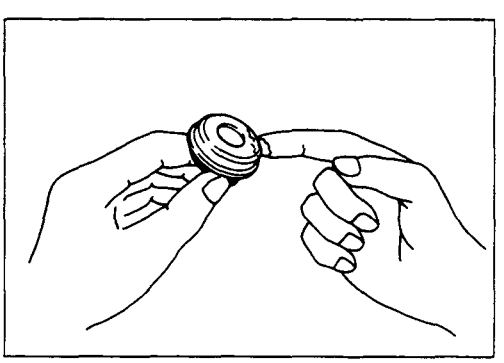

5. Seal Unit

6. Impeller

1) Apply a thin coat of liquid gasket to the seal unit outer periphery.
2) Install the seal unit.

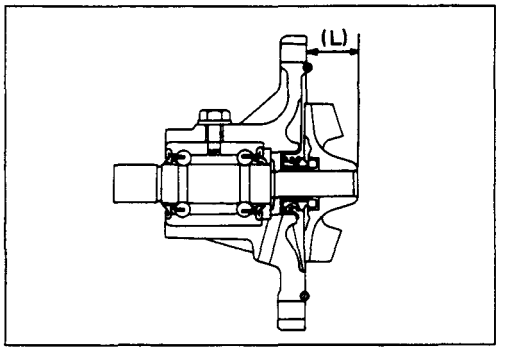

3) Use a bench press to slowly force the impeller into place until the impeller installed distance from the water pump body face is equal to the specified value.

Impeller Projection (L) (Reference)	mm(in)
25 (0.98)	

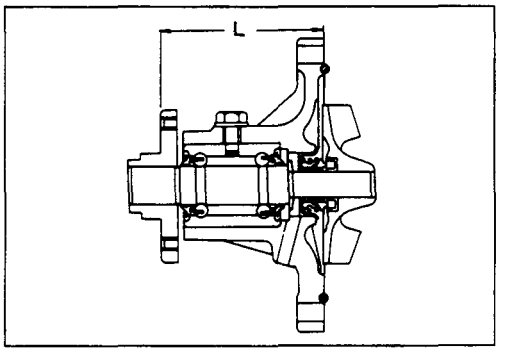

7. Cooling Fan Center

Measure the distance between the cooling fan fitting face and the rear cover fitting face.

Cooling Fan Center Distance Ⓛ	mm(in)
79.2–79.8 (3.12–3.14)	

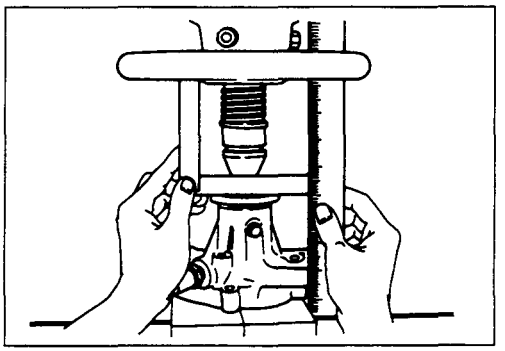

Notes:

1. **The fan center and the impeller are installed to the water pump shaft with a press.**

   Never attempt to remove and reinstall the fan center and the impeller a second time. Replace the entire water pump assembly.

   Removing and reinstalling the fan center and the impeller a second time may result in the breakdown of the water pump during engine operation and subsequent serious overheating problems.
2. **The water pump assembly must be replaced whenever the fan center and impeller pressure force falls below 200 kg. (440 lb/1,960 N)**
3. **Do not attempt to strike the bearing into position with a hammer or similar object. Damage to the bearing will result.**

THERMOSTAT

REMOVAL AND INSTALLATION

Read this Section carefully before performing any removal and installation procedure. This Section gives you important points as well as the order of operation. Be sure that you understand everything in this Section before you begin.

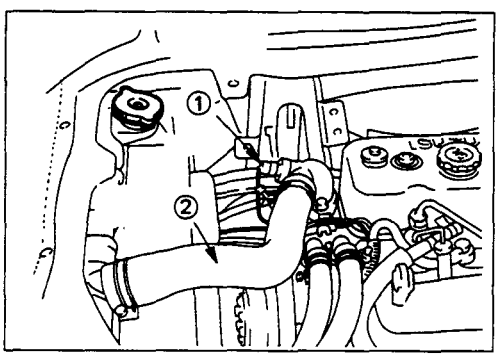

Important Operations — Removal

Radiator Upper Hose

1. Disconnect the wiring harness ①.
2. Partially drain the engine coolant.
3. Disconnect the radiator upper hose ②.

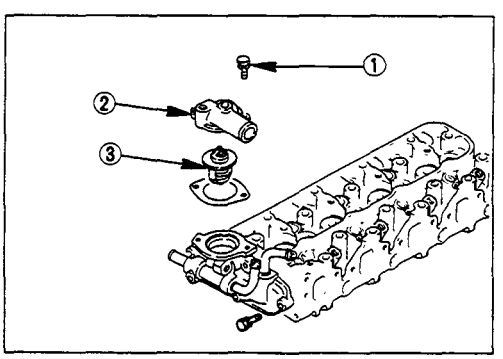

Water Outlet Pipe

Thermostat

1. Loosen the water outlet pipe bolt ①.
2. Remove the water outlet pipe ②.
3. Remove the thermostat ③ from the thermostat housing.

   Take care not to damage the thermostat.

Important Operations — Installation

Follow the removal procedure in the reverse order to perform the installation procedure. Pay careful attention to the important points during the installation procedure.

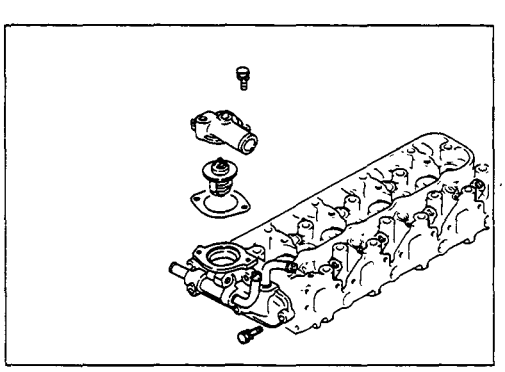

Thermostat

Water Outlet Pipe

1. Install the thermostat to the thermostat housing.
2. Install the water outlet pipe with the gasket to the thermostat housing.
3. Tighten the outlet pipe to the specified torque.

Outlet Pipe Bolt Torque	kg·m(lb·ft/N·m)
1.9 ± 0.5 (13.7 ± 3.6/18.6 ± 4.9)	

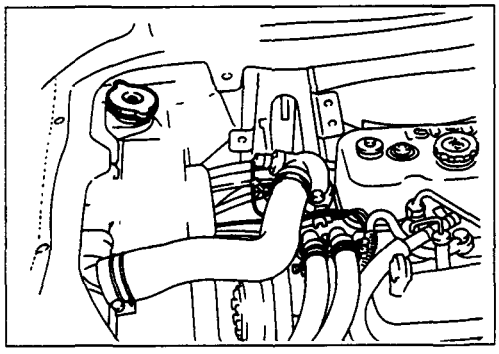

Radiator Upper Hose

1. Connect the radiator upper hose to the water outlet pipe.
2. Replenish the engine coolant.
3. Make sure the wiring harness is properly connected.
4. Start the engine and allow it to warm up.
5. Check the temperature gauge operation.

INSPECTION AND REPAIR

Make the necessary adjustments, repairs, and part replacements if excessive wear or damage is discovered during inspection.

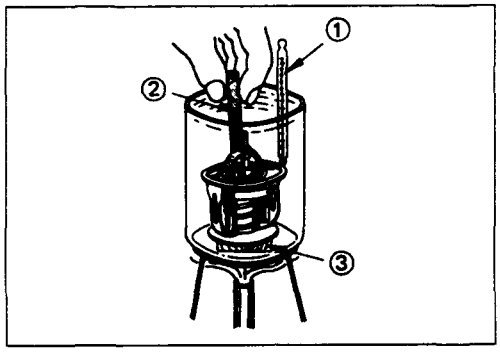

Operating Test

1. Completely submerge the thermostat in water.
2. Heat the water.
   Stir the water constantly to avoid direct heat being applied to the thermostat.
3. Check the thermostat initial opening temperature.

Thermostat Initial Opening Temperature	°C(°F)
82 (180)	

4. Check the thermostat full opening temperature.

Thermostat Full Opening Temperature	°C(°F)
95 (203)	

Valve Lift At Fully Open Position	mm(in)
9.5 (0.37)	

① Thermometer
② Agitating rod
③ Wooden piece

FAN CLUTCH WITH COOLING FAN

INSPECTION AND REPAIR

Make necessary correction or parts replacement if wear, damage or any other abnormal condition are found through inspection.

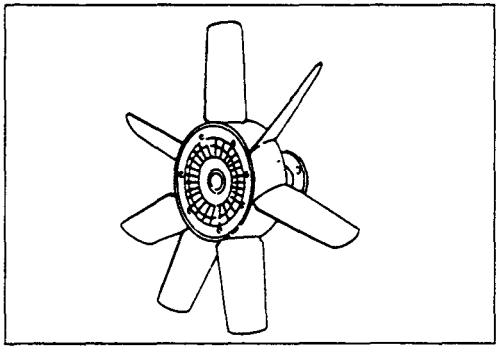

Visually inspect for damage, leak (sillicon grease) or other abnormal conditions.

1. Inspection (on-vehicle)

1) Turn the fan clutch by hand when in a low temperature condition before starting the engine, and confirm that it can be turned readily.
2) Start the engine to warm it up until the temperature at the fan clutch portion gets to around 80°C. Then stop the engine and confirm that the fan clutch can be turned with considerable effort (clutch torque) when turned by hand.
   If the fan clutch rotates more readily, however, this indicates that the silicone grease is leaking internally. Replace the fan clutch with a new one.

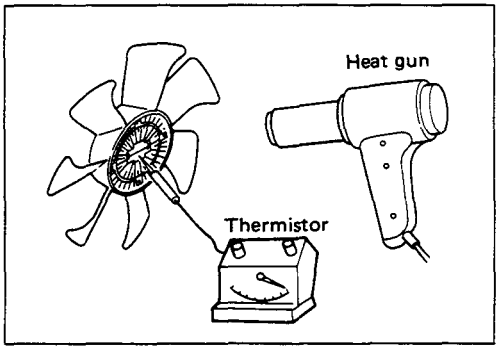

2. Inspection (in unit)

Warm up the bimetal of the fan clutch by using the heat gun until the temperature gets to about 80°C when measured with the thermistor. Then confirm that the fan clutch can be turned with considerable effort (clutch torque).
If the fan clutch retates more readily at this time, this indicates that the silicone grease is leaking internally.
Replace the fan clutch with a new one.

DELTA OPEL ISUZU SUZUKI

Hi - Tech

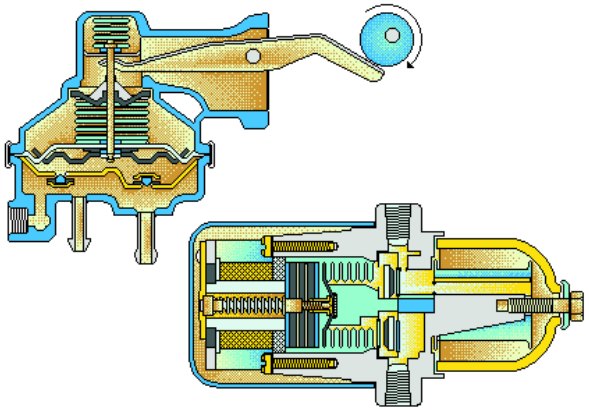

Index

Pump

Nozzle

Calibration

KB TF 140
Diesel Fuel System

ISUZU

SECTION 6C

FUEL SYSTEM

TABLE OF CONTENTS

	PAGE
Main Data and Specifications	6C– 2
General Description	6C– 3
Injection Pump	6C–11
Removal and Installation	6C–11
Solenoid Valve Type Cold Start Device (C.S.D.)	6C–13
Inspection and Repair	6C–14
Injection Pump Calibration Data	6C–15
Injection Nozzle	6A–19
Disassembly	6A–19
Inspection and Repair	6A–20
Reassembly	6A–21

MAIN DATA AND SPECIFICATIONS

Item		Description	
		4JA1	4JB1T
Injection pump type		Bosch Distributor	
Plunger outside diameter	mm(in)	11 (0.43)	
Plunger prestroke	mm(in)	0.45 (0.0177)	
Governor type		Mechanical variable speed	Mechanical limit speed
Timer type		Oil pressure	
Fuel feed pump type		Vane with input shaft	
Injection nozzle type		Hole type	
Number of injection nozzle orifices		5	
Injection nozzle orifices inside diameter	mm(in)	0.21 (0.0083)	0.27 (0.0106)
Injection nozzle opening	kg/cm^2(psi/kPa)	185 (2,631/18,130)	
Main fuel filter type		Disposable cartridge paper element and water separator	

GENERAL DESCRIPTION

FUEL FLOW

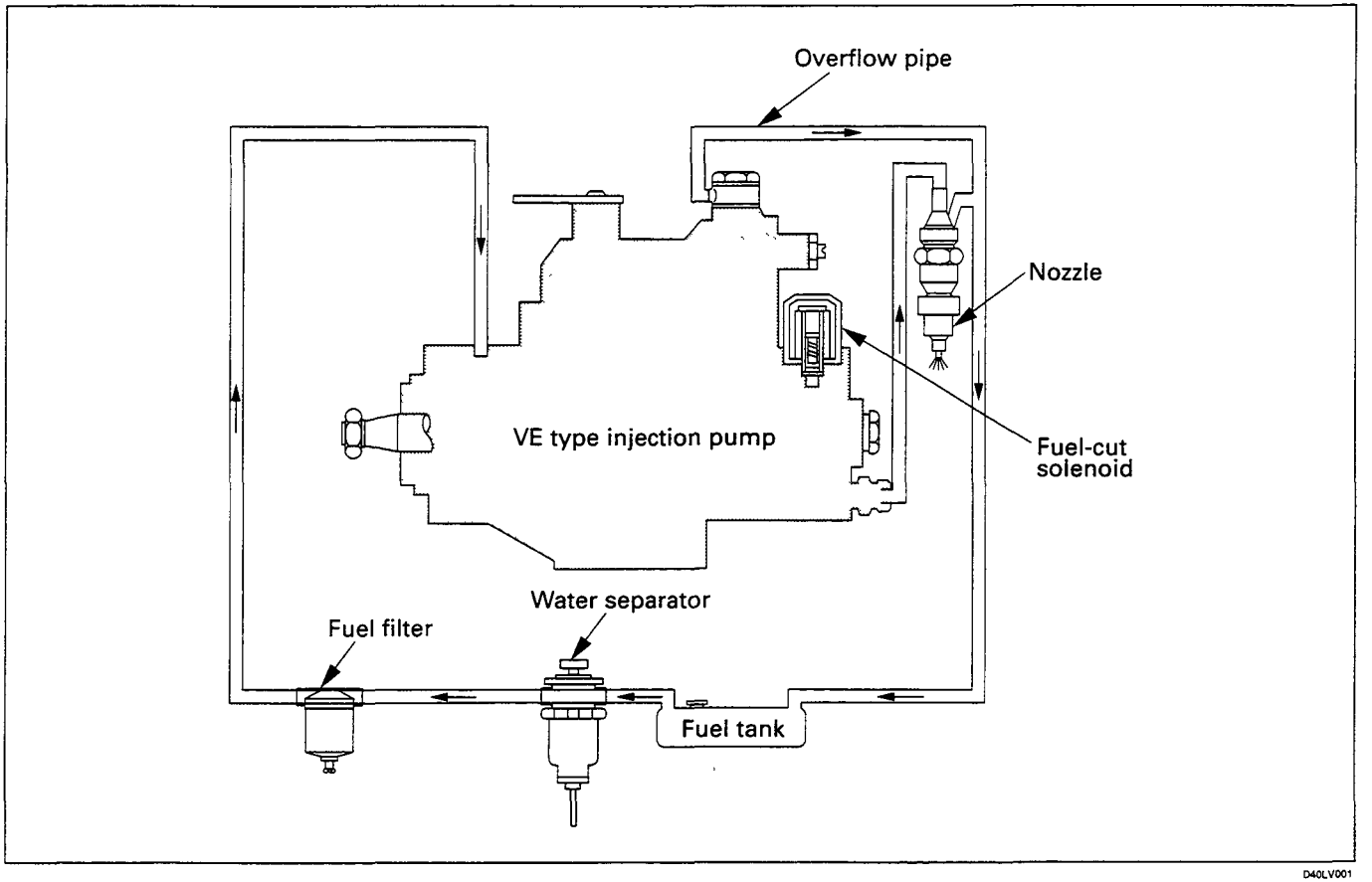

D40LV001

The fuel system consists of the fuel tank, the water separator, the fuel filter, the injection pump, and the injection nozzle.

The fuel from the fuel tank passes through the water separator and the fuel filter where water particles and other foreign material are removed from the fuel.

Fuel, fed by the injection pump plunger, is delivered to the injection nozzle in the measured volume at the optimum timing for efficient engine operation.

INJECTION PUMP

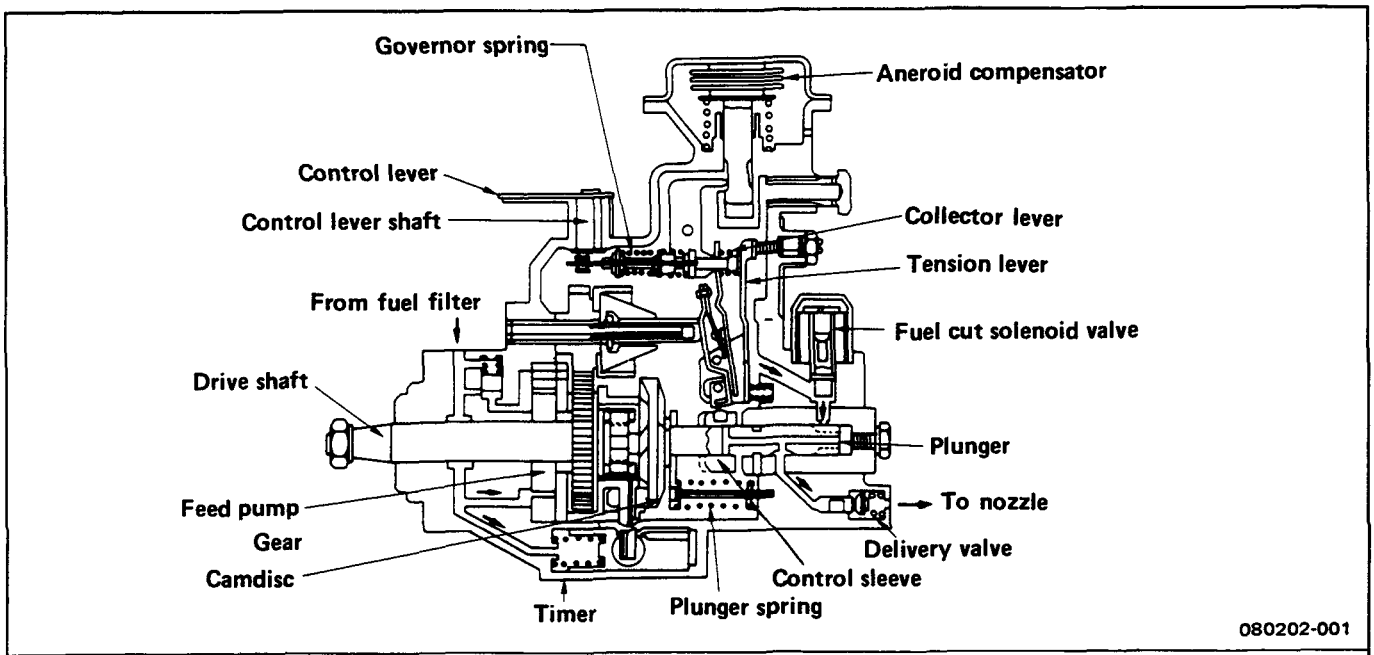

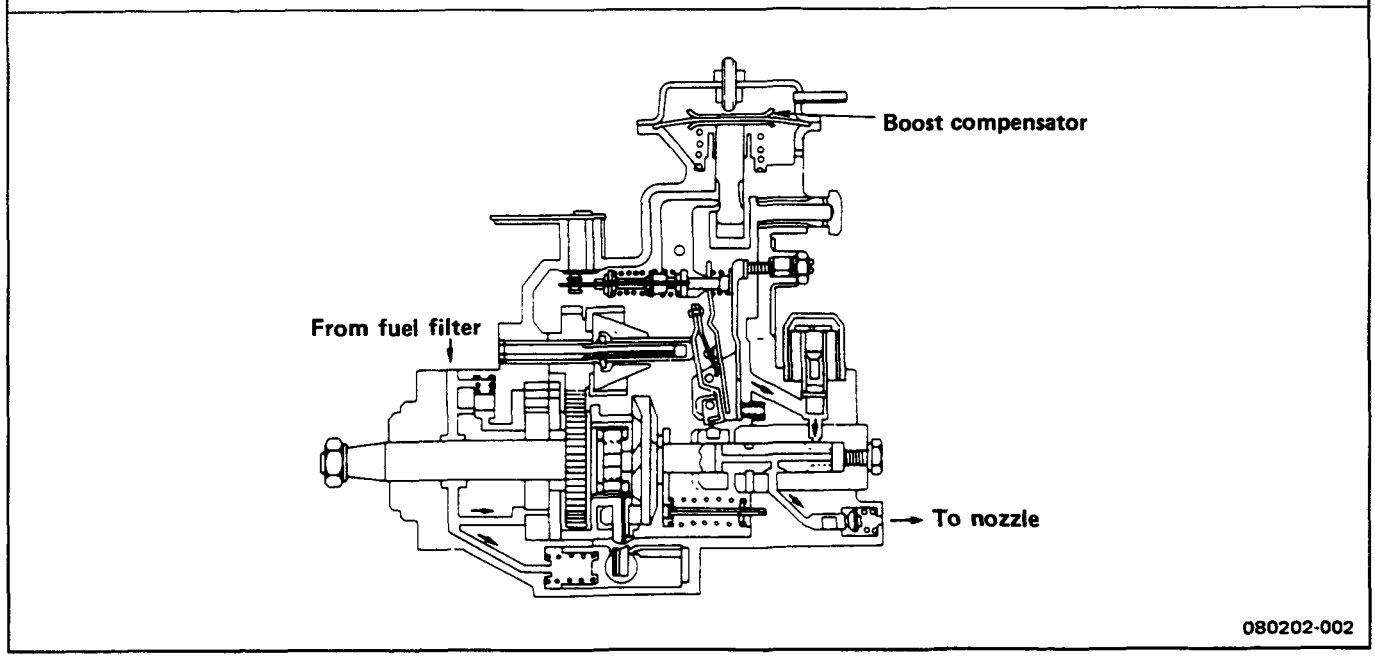

A Bosch Distributor Type Injection Pump is used. A single reciprocating/revolving plunger delivers the fuel uniformly to the injection nozzles, regardless of the number of cylinders.

The governor, the injection timer, and the feed pump are all contained in the injection pump housing. The injection pump is compact, light weight, and provides reliable high-speed operation.

An aneroid compensator is available as an option for vehicles to be operated at high altitudes. It adjusts the fuel and air mixing ratio.

A boost compensator is installed on turbocharger equipped vehicles.

ANEROID COMPENSATOR

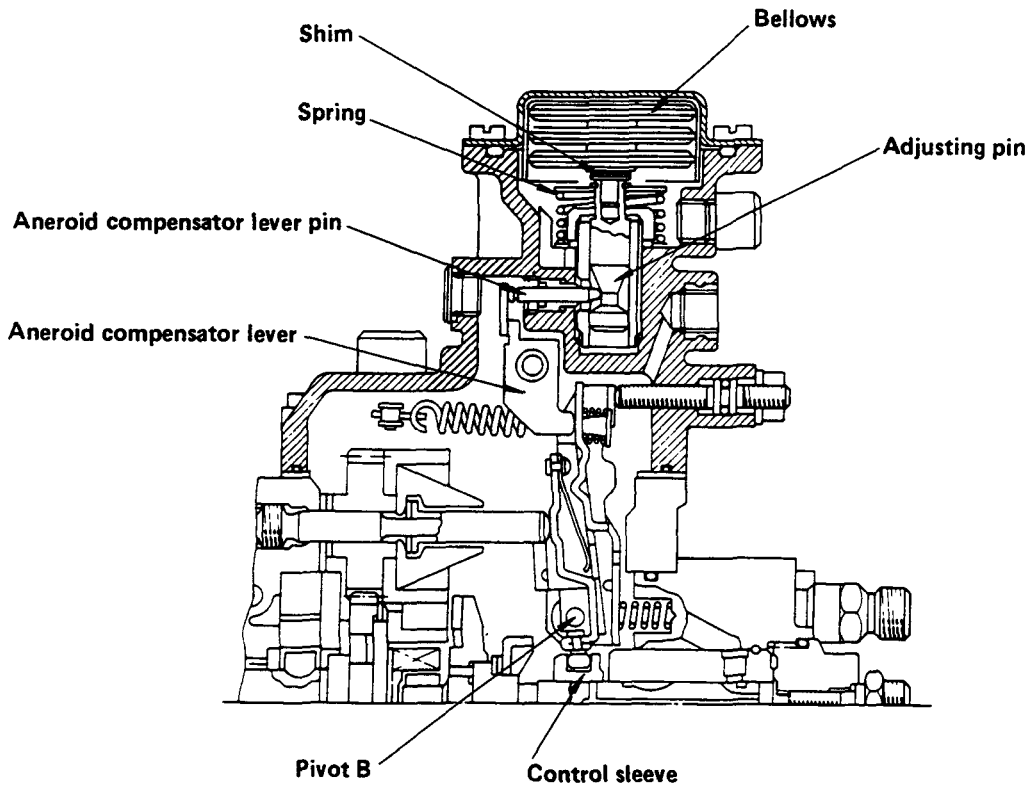

The aneroid compensator consists of the compensator housing, the bellows, the adjusting pin, the aneroid compensator lever pin, and the aneroid compensator lever.

Atmospheric pressure decreases as altitude increases. The decreased atmospheric pressure causes the bellows to expand and push the adjusting pin down.

The adjusting pin pushes the aneroid compensator lever pin and the aneroid compensator lever to the left.

The aneroid compensator lever pushes the tension lever to the right.

The tension lever actuates the control sleeve to decrease the fuel flow.

BOOST COMPENSATOR

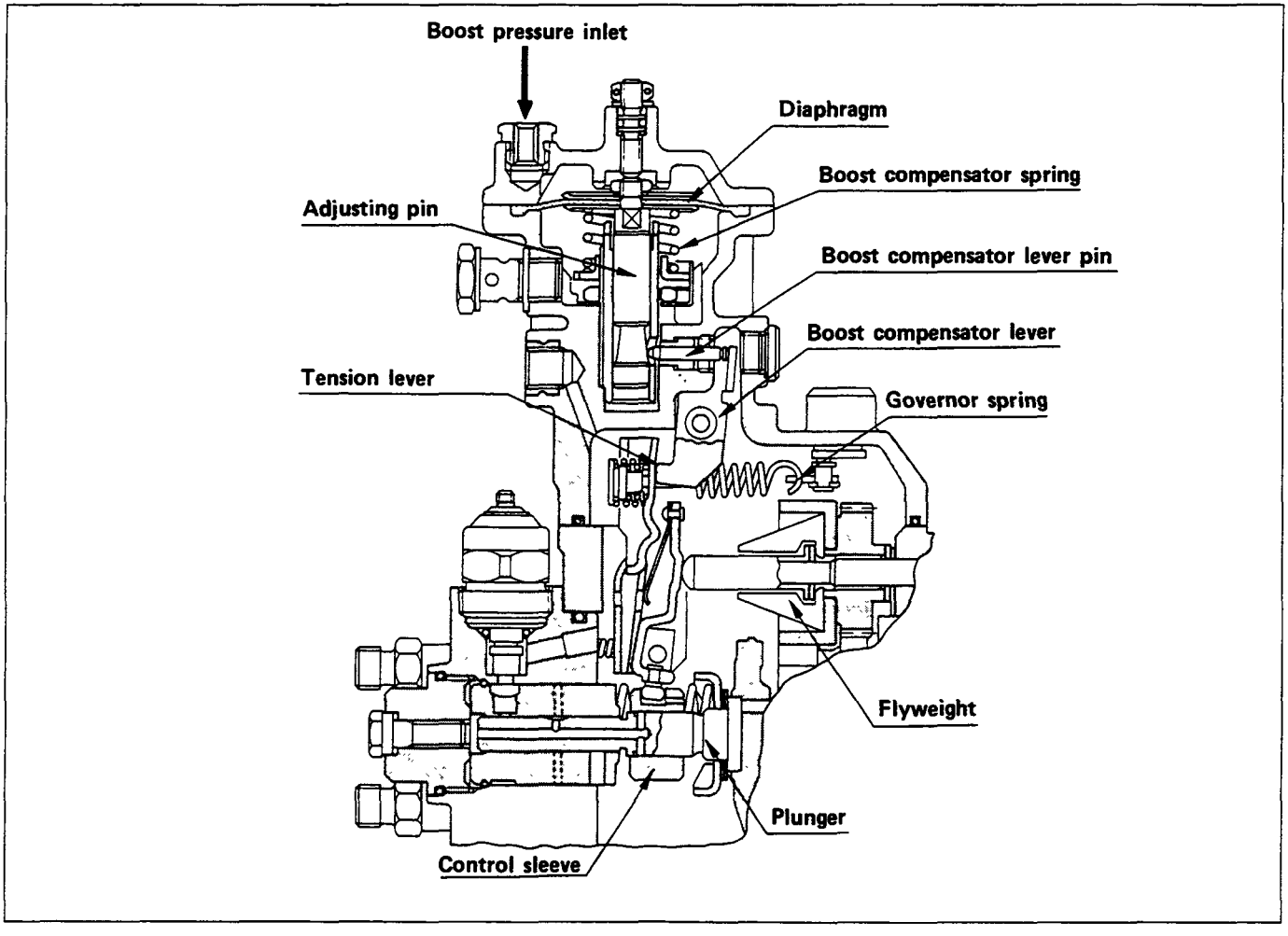

The boost compensator consists of the compensator housing, the diaphragm, the adjusting pin, the boost compensator lever pin, and the boost compensator lever.

The increase boost pressure cause the diaphragm to lower and push the adjusting pin down.

The adjusting pin pushes the boost compensator lever pin and the boost compensator lever to the left.

The boost compensator lever pushes the tension lever to the right.

The tension lever actuates the control sleeve to increase the fuel flow.

FAST IDLE ACTUATOR

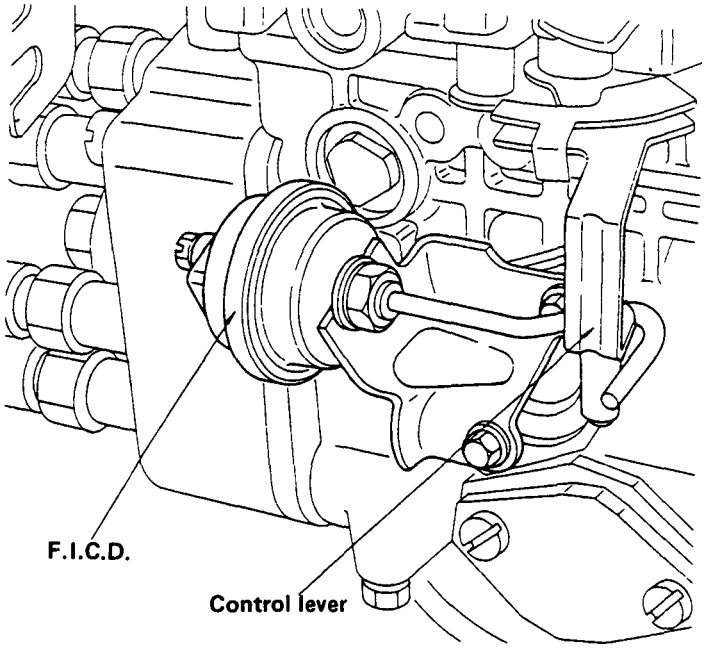

The vacuum-type fast idle actuator increases the engine idling speed to provide the additional power required to operate the air conditioner.

Fast idler diaphragm movement is caused by changes in the negative pressure created by the engine's vacuum pump.

The diaphragm motion is transferred to the injection pump control lever to increase or decrease the idling speed.

WAX TYPE COLD START DEVICE (W – CSD) (If so equipped)

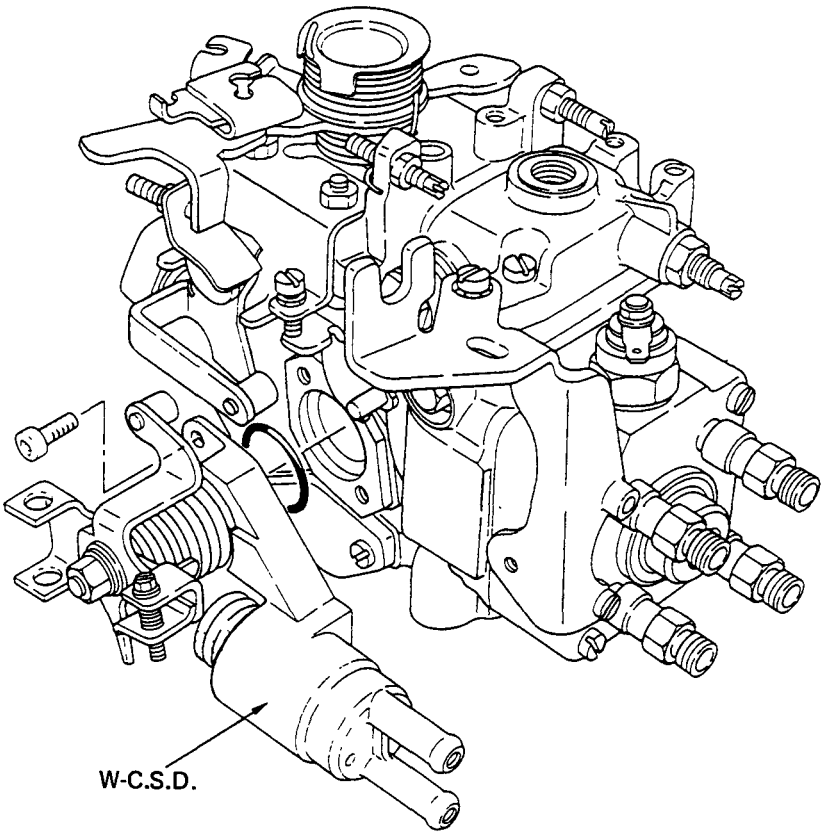

Because engine starting in cold conditions is very difficult, the W-C.S.D. (wax type cold start device) has been developed to provide the optimum fuel injection timing for engine starting by responding to temperature changes.

The thermo-wax piston contains a wax that changes its volume according to the temperture changes of the engine coolant which flows through the unit at all times.

The engine coolant temperature above A °C the wax expands in proportion to the coolant temperature, below A °C it contracts.

The coolant temperature A is classified as –20, –10 and 0°C.

FUEL FILTER AND WATER SEPARATOR

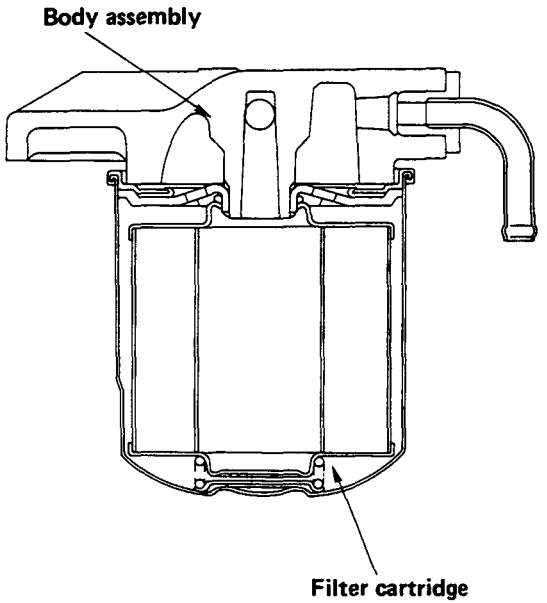

080203-001

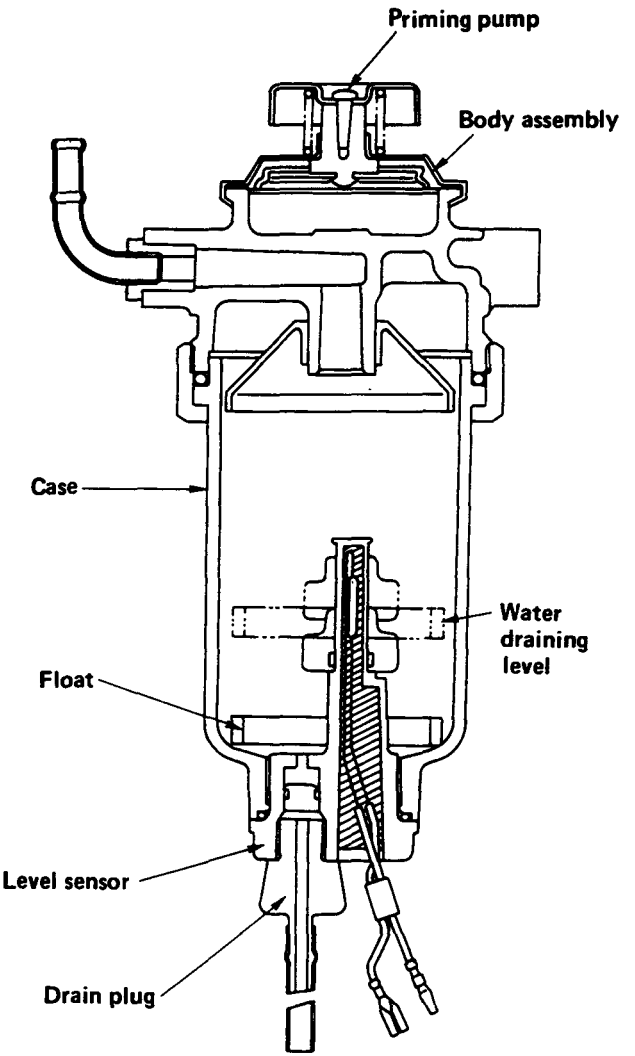

080203-003

A cartridge type fuel filter and a water separator are used along with the VE type injection pump.

As the inside of the injection pump is lubricated by the fuel which it is pumping, the fuel must be perfectly clean. The fuel filter and the water separator remove water particles and other foreign material from the fuel before it reaches the injection pump.

The water separator has an internal float. When the float reaches the specified level, a warning light comes on to remind you to drain the water from the water separator.

A diaphragm type priming pump is installed at the top of the water separator. It is used during the water draining and the air bleeding procedures.

INJECTION NOZZLE

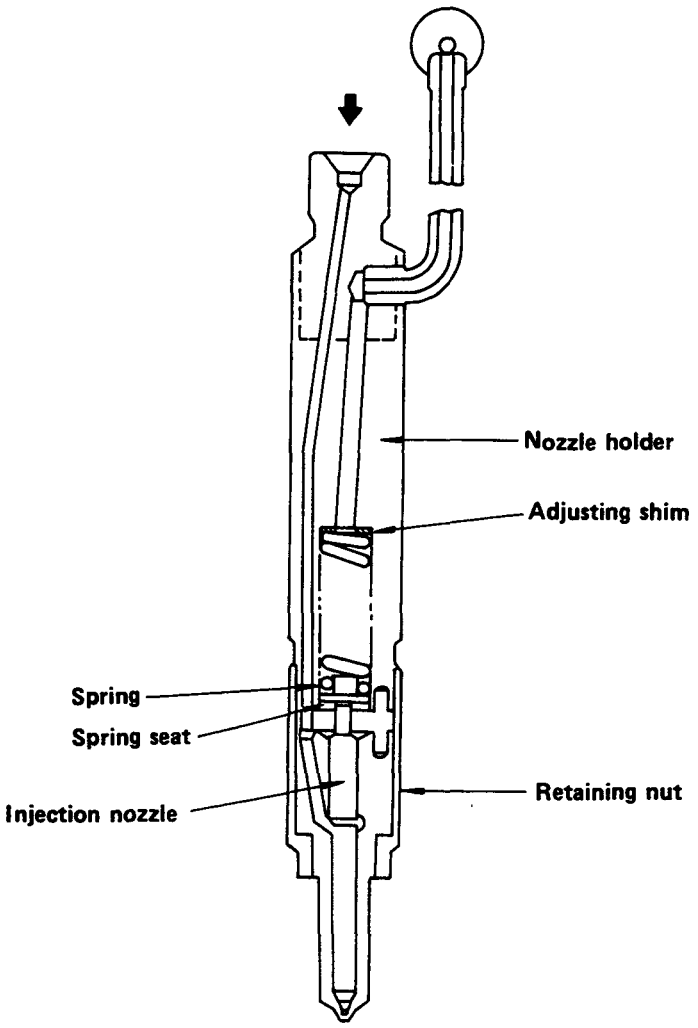

A hole (with 5 orifices) type injection nozzle is used. It consists of the nozzle body and the needle valve assembly.

The injection nozzle assembly sprays pressurized fuel from the injection pump into the combustion chamber through the nozzle body injection orifice.

INJECTION PUMP

REMOVAL AND INSTALLATION

Read this Section carefully before performing any removal and installation procedure. This Section gives you important points as well as the order of operation. Be sure that you understand everything in this Section before you begin.

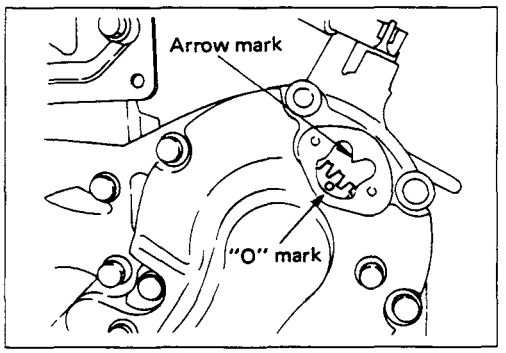

Removal Steps

1. Disconnect the battery ground cable.
2. Disconnect the air cleaner duct.
3. Disconnect the PCV hose.
4. Remove the head cover.
5. Remove the power steering V belt. (if so equipped)
6. Disconnect the accelerator cable and harness from injection pump.
7. Remove the fuel pipes and injection pipes.
8. Remove the cover of timing gear case cover. (injection pump side only)
9. Remove the timing hole cover.
10. For ease in reinstalling the injection pump, align the timing "O" mark on the pump gear with the allow mark on the timing gear case cover using the crank shaft turning wrench.

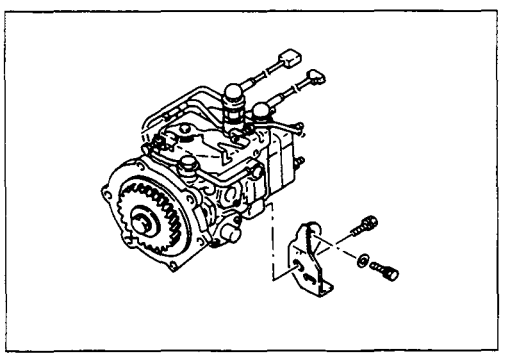

11. Remove the six injection pump mounting bolts from the timing gear case cover.
12. Remove the rear bracket bolts from the injection pump bracket.
13. Pull the injection pump together with pump gear free toward the rear of the engine.

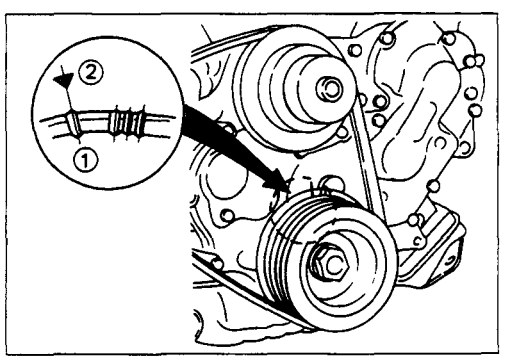

Installation Steps

To install, follow the removal procedure in reverse order and note the following point.

- Recheck the crankshaft to align the timing mark on the crank pulley with the TDC mark.

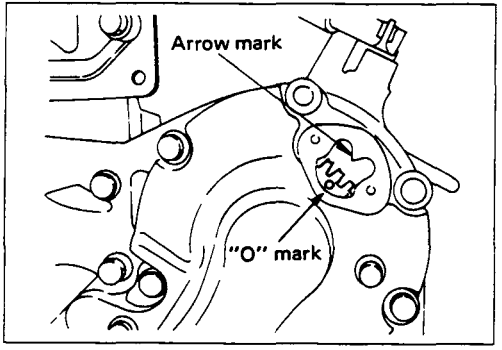

- Install injection pump so that the timing "O" mark on the pump gear the arrow mark on the timing gear case cover.

SOLENOID VALVE TYPE COLD START DEVICE (C.S.D.) (4JB1T)

GENERAL DESCRIPTION

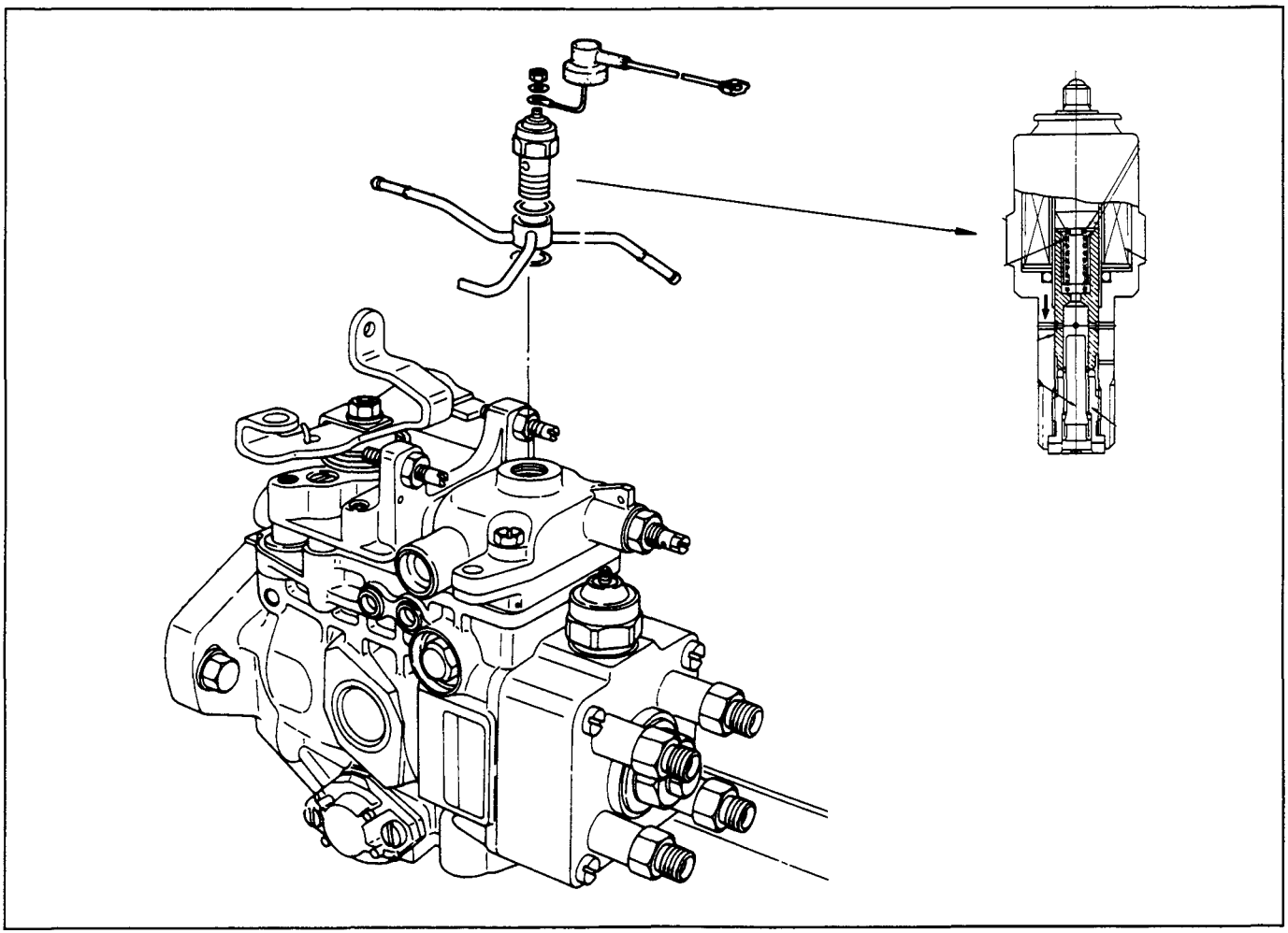

The solenoid timer functions to advance fuel injection timing.

INSPECTION AND REPAIR

Make the necessary adjustments, repairs, and part replacement if excessive wear or damage is discovere during inspection.

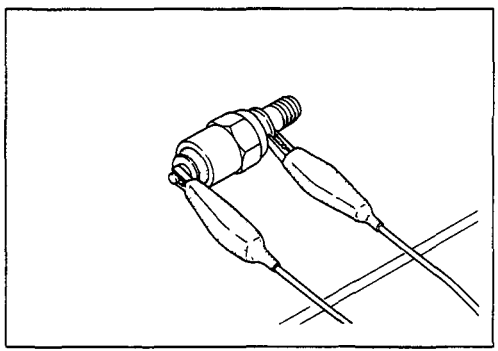

Solenoid Switch

Apply the specified voltage to the solenoid valve.

Listen for a click sound.

If there is no clicking sound, the solenoid valve i defective and must be replaced.

Test Voltage	V
12 – 14	

INJECTION PUMP CALIBRATION DATA

080401
INJECTION VOLUME ADJUSTMENT

08040101
TEST CONDITIONS

Item		Condition
Injection nozzle		ZEXEL Part No.: 105780-0060 Bosch Type No. : DNOSD1510
Injection nozzle holder		ZEXEL Part No. : 105780-2150
Injection nozzle opening pressure	kg/cm^2(psi/kPa)	133 (1,891/13,000)
Injection line dimensions	mm(in)	
Inside diameter		2 (0.079)
Outside diameter		6 (0.236)
Length		450 (17.7)
Fuel delivery pressure	kg/cm^2(psi/kPa)	0.2 (2.84/19.6)
Test fuel		Bosch Diesel Fuel OL61V11 SAE Standard Test Diesel Fuel (SAE967D)
Test fuel temperature	°C(°F)	45 – 50 (113 – 122)
Identification numbers		104746-6190 104746-6161

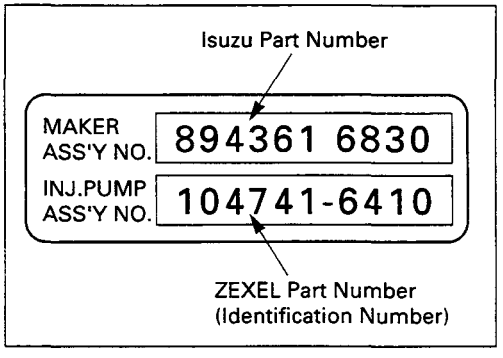

IDENTIFICATION PLATE AND NUMBER

Use the data following the injection pump identification number to adjust the injection volume.

INJECTION VOLUME AND GOVERNOR PERFORMANCE DIAGRAM

Identification Numbers: 104746-6190 (ISUZU Part Number 8-97132-318-0)

Test Fuel: Standard Diesel Fuel SAE J967D (or ISO 4113)

Governor Adjustment

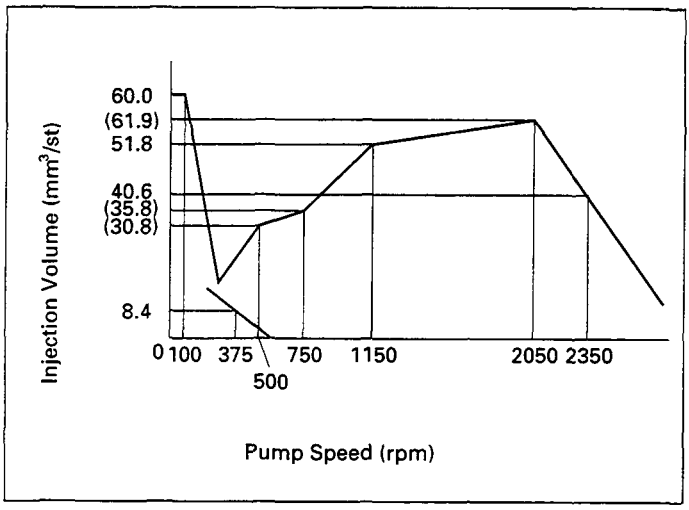

Timing Advance

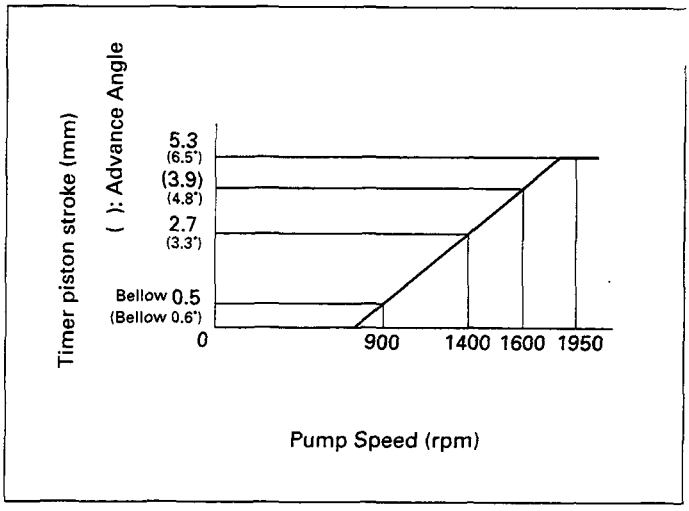

Cold Starte Device

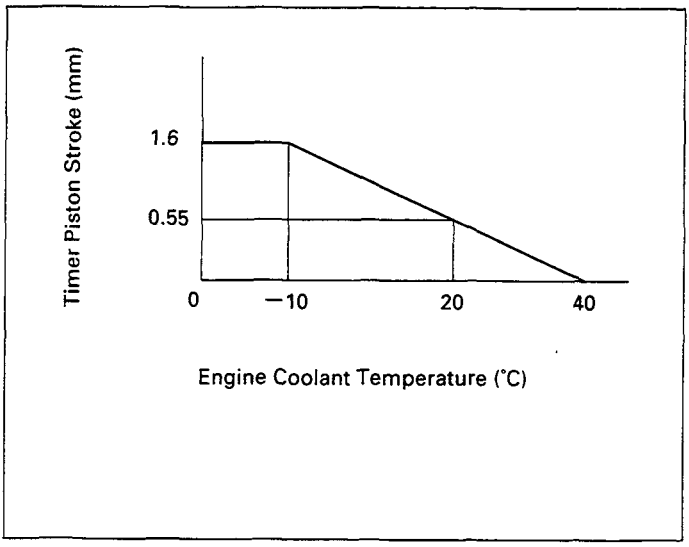

INJECTION VOLUME AND GOVERNOR PERFORMANCE DIAGRAM

Identification Numbers: 104746-6161 (ISUZU Part Number 8-97132-679-1)

Test Fuel: Standard Diesel Fuel SAE J967D (or ISO 4113)

Governor Adjustment

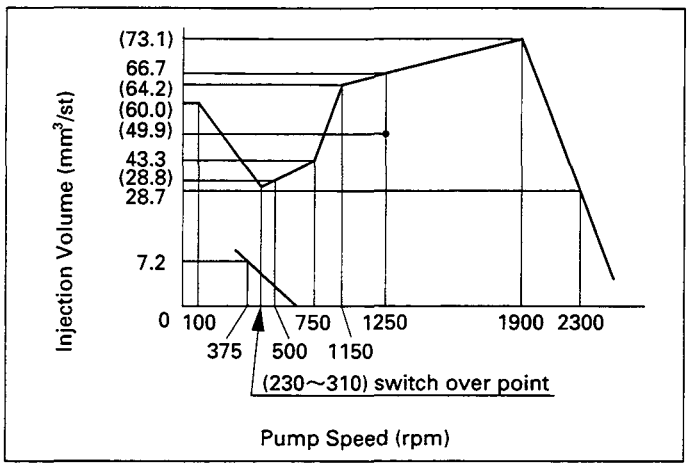

Timer and Pump Case Pressure

Pump speed rpm	Timer piston stroke mm	Pump case pressure kpa (kg/cm²)	Boost pressure kpa (kg/cm²)	Reference
1300	Bellow 0.5		73.3 (0.75)	
1600	(2.2±0.4)		73.3 (0.75)	
1900	4.5±0.2	618±20 (6.3±0.2)	73.3 (0.75)	Base
2300	$7.0^{+0.4}_{-0.3}$		73.3 (0.75)	

Timing Advance

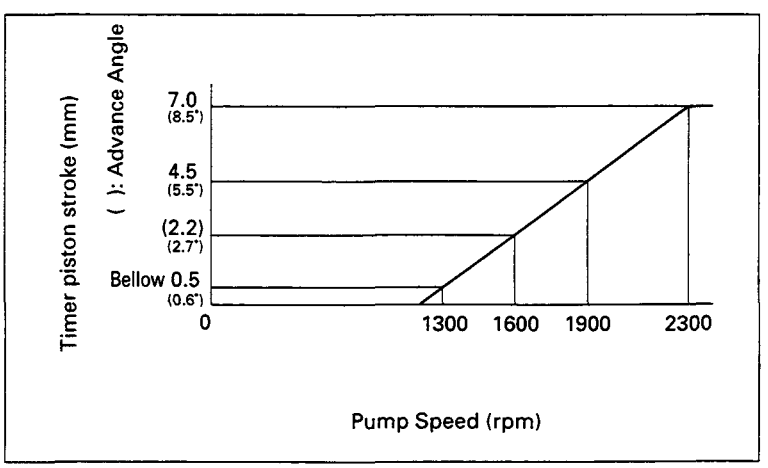

Cold Starte Device

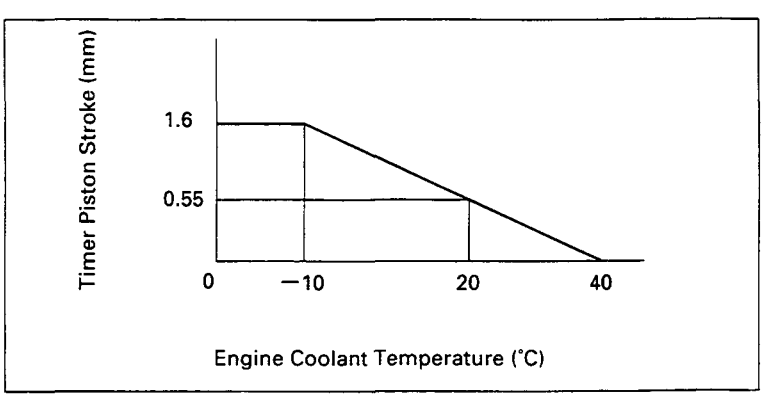

Vacuum Fast Idle Control Device (V-FICD) Adjustment (If so equipped)

1. Set the bracket clearance "S" to 1.5 ± 0.5 mm (0.06 ± 0.02 in).
2. Apply 400 mmHg negative pressure to the inside of the actuator.
   Check that the actuator shaft moves one complete stroke.

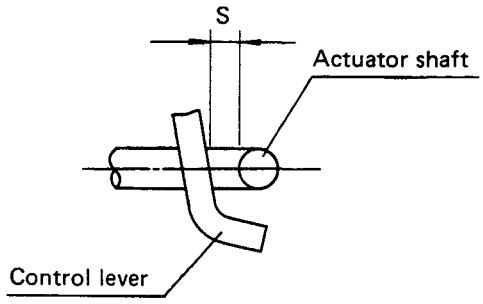

HIGH ALTITUDE EQUIPMENT (If so equipped)

Full Load Fuel Injection Volume Adjustment

1. Remove the aneroid compensator cover, the bellows, and the adjusting shims.
2. Refer to the appropriate INJECTION VOLUME AND GOVERNOR PERFORMANCE DIAGRAM.
   Make the required adjustments.
   Do not adjust the aneroid compensator at this time.

Aneroid Compensator (ACS) Adjustment (If so equipped)

1. Install the adjustment shims, the bellows, and the ACS cover.
2. Set the injection pump speed to 1,150 rpm.
3. Measure the injection volume for the applicable operating altitude (atmospheric pressure in mmHg).
4. Calculate the decreasing injection volume and check it against the graph below.
5. If required, use adjusting shims to adjust the aneroid compensator.

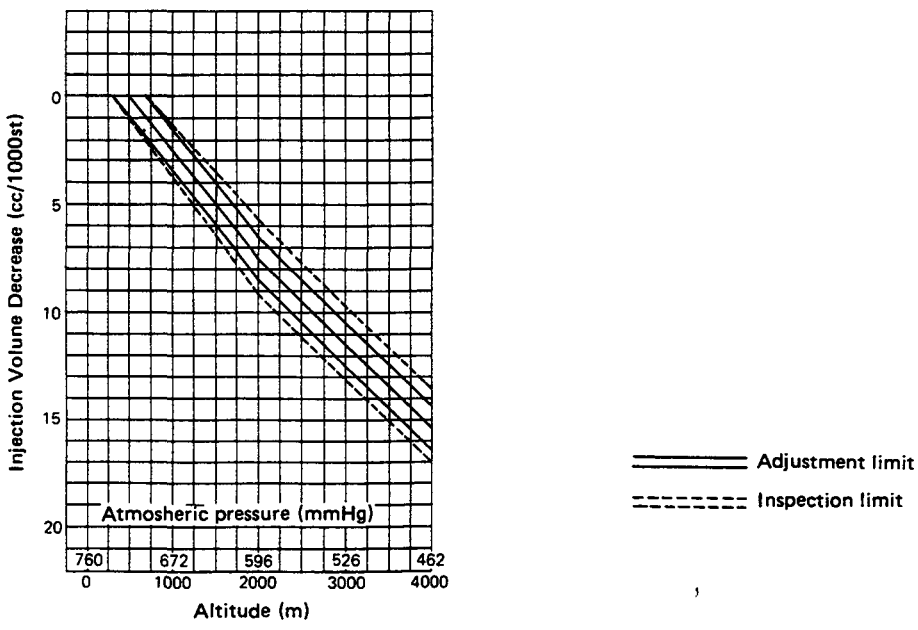

INJECTION NOZZLE

DISASSEMBLY

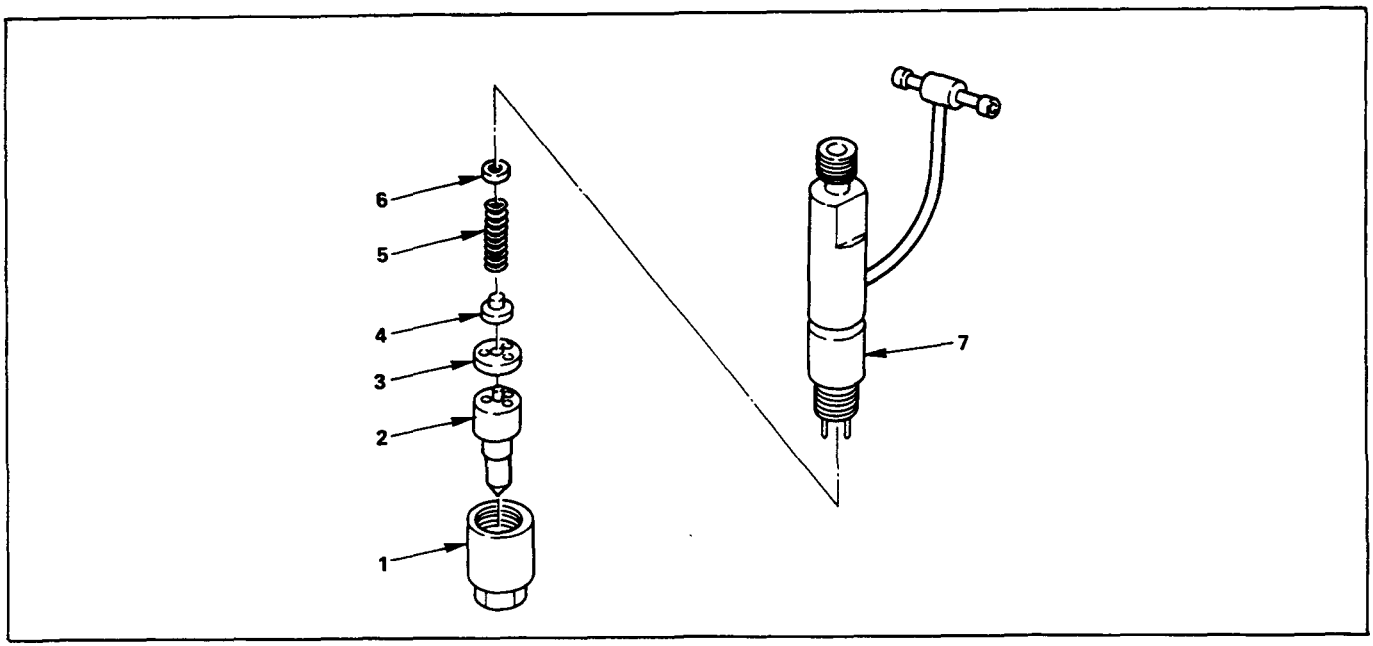

Disassembly Steps

1. Retaining nut
▲ 2. Injection nozzle
3. Spacer
4. Spring seat
5. Spring
6. Adjusting shim
7. Nozzle holder

Important Operations

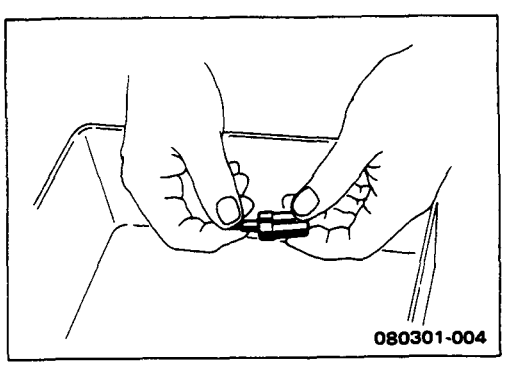

2. Injection nozzle

1) Remove the nozzle assemblies from the nozzle holders.

   Tag the nozzle assemblies and the nozzle holders to ensure that they are reinstalled in their original positions.

   The nozzle assembly and nozzle holder combinations must not be interchanged.

2) Immerse the injection nozzles in a tool tray filled with clean diesel oil to protect them from dust.

INSPECTION AND REPAIR

Make the necessary adjustments, repairs, and part replacements if excessive wear or damage is discovered during inspection.

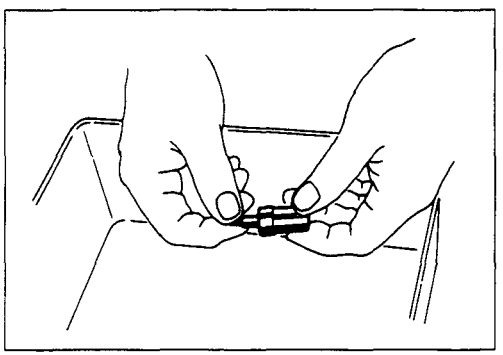

Injection Nozzle Needle Inspection

1. Remove the nozzle needle from the nozzle body.
2. Carefully wash the nozzle needle and the nozzle body in clean diesel fuel.
3. Check that the nozzle needle moves smoothly inside the injection nozzle body.

   If the nozzle needle doesnot move smoothly, it must be repaired (See "Nozzle Lapping Procedure" below).

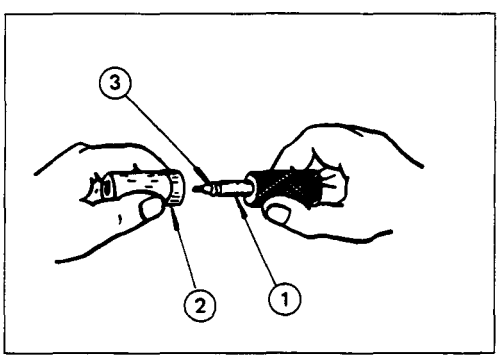

Nozzle Lapping Procedure

1. Lap the nozzle needle ① and the nozzle body ② by applying a compound of oxidized chrome and animal oil.

Note:

Do not apply an excessive amount of the oxidized chrome and animal oil compound to the injection needle valve seat area ③.

2. Carefully wash the needle valve and the nozzle body in clean diesel fuel after lapping.

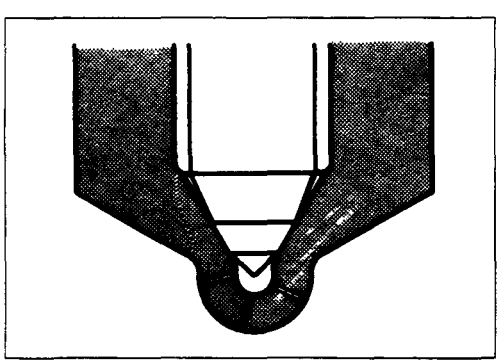

Nozzle Body and Needle Valve Inspection

Check the nozzle body and the needle valve for damage and deformation.

The nozzle and body assembly must be replaced if either of these two conditions are discovered during inspection.

REASSEMBLY

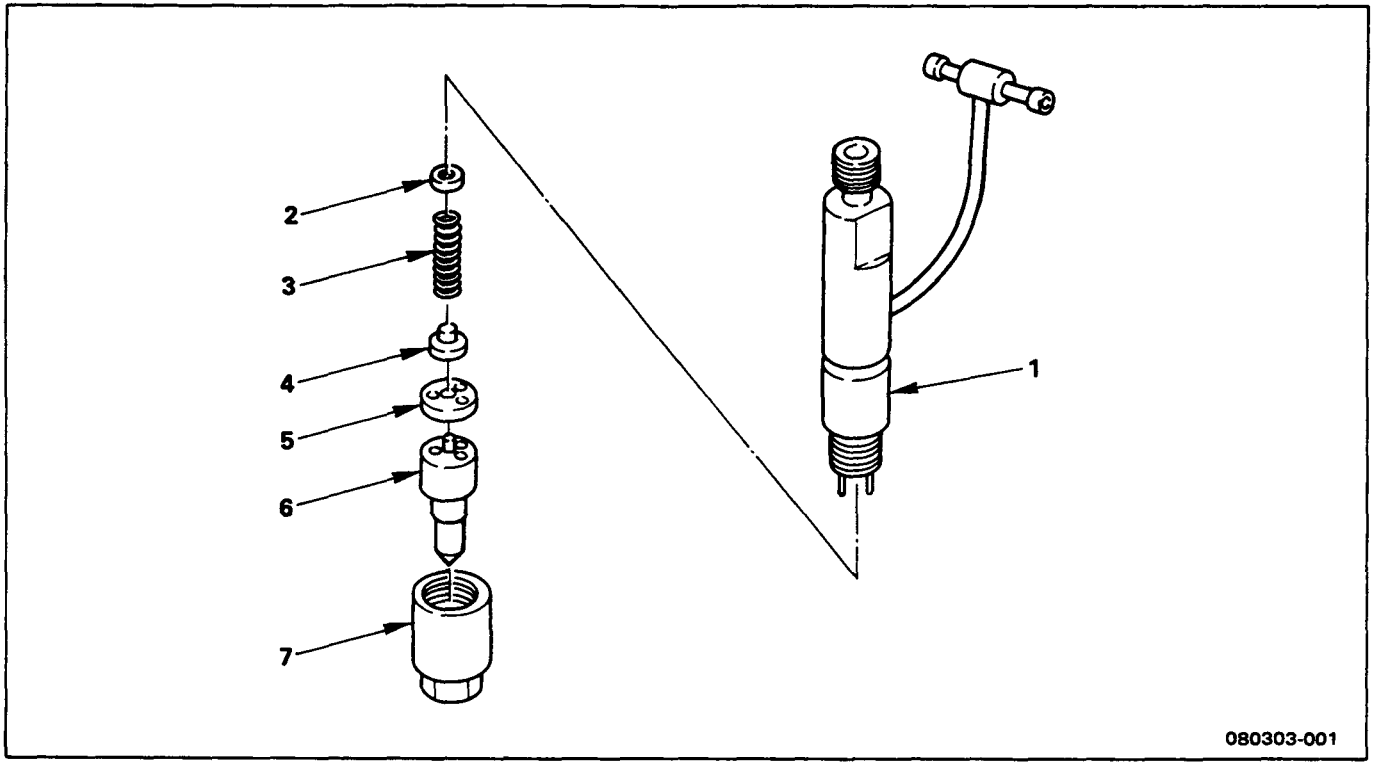

Reassembly Steps

1. Nozzle holder
2. Adjusting shim
3. Spring
4. Spring seat
5. Spacer
6. Injection nozzle
▲ 7. Retaining nut

Important Operations

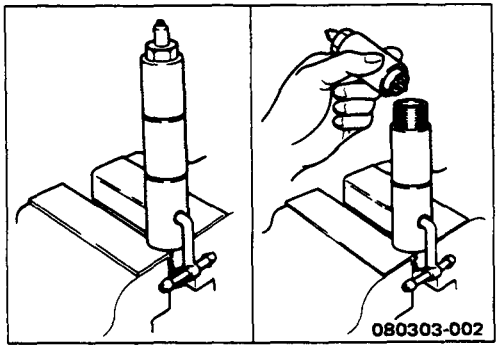

7. Retaining Nut

Tighten the retaining nut to the specified torque.

Retaining Nut Torque	kg·m(lb.ft/N·m)
3.5 ± 0.5 (25.3 ± 3.6/34.3 ± 4.9)	

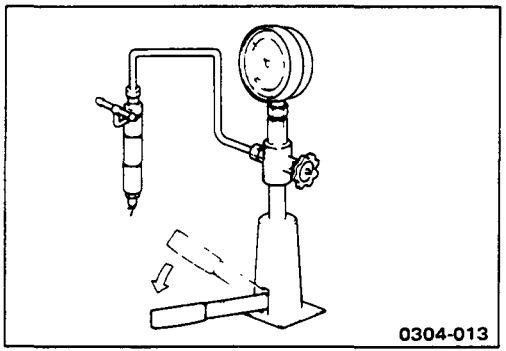

Injection Nozzle Adjustment

The fuel injection starting pressure adjustment of this injection nozzle is done by replacing or decreasing or increasing the number of shims installed.

1) Attach the injection nozzle holder to the injection nozzle tester.
2) Apply pressure to the nozzle tester to check that the injection nozzle opens at the specified pressure.

   If the injection nozzle does not open at the specified pressure, install or remove the appropriate number of ajusting shims to adjust it.

Adjusting Shim Availability — mm(in)

Range	0.50 – 1.50 (0.02 – 0.06)
Increment	0.025 (0.001)
Total No. of Shims	41

Removing or installing one shim will increase or decrease the nozzle opening pressure approximately 3.77 kg/cm^3 (53.6 psi/369.46 kPa).

WARNING:

TEST FLUID FROM THE INJECTION NOZZLE TESTER WILL SPRAY OUT UNDER GREAT PRESSURE. IT CAN EASILY PUNCTURE A PERSON'S SKIN. KEEP YOUR HANDS AWAY FROM THE INJECTION NOZZLE TESTER AT ALL TIMES.

DELTA OPEL ISUZU SUZUKI

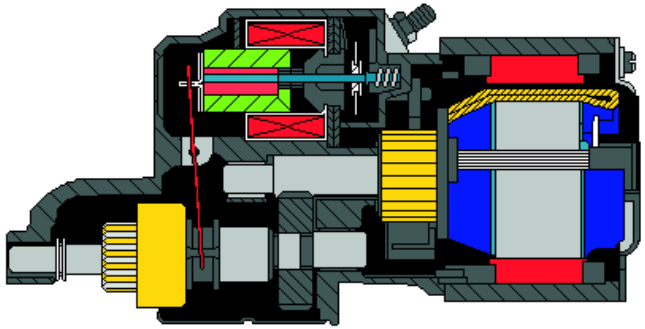

Hi - Tech

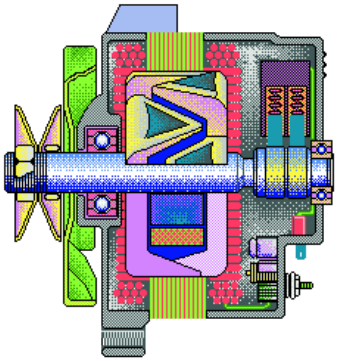

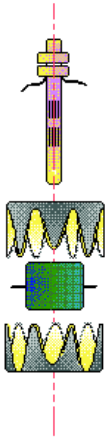

Index

Specs.

Alternator

Starter

KB TF 140 Diesel
Engine Electrical

ISUZU

SECTION 6D

ENGINE ELECTRICAL

TABLE OF CONTENTS

	PAGE
Main Data and Specifications	6D– 2
General Description	6D– 3
Wire Coding	6D– 5
Symbols and Abbreviations	6D– 7
Torque Specifications	6D– 9
Alternator	6D–10
Removal and Installation	6D–10
Disassembly	6D–12
Inspection and Repair	6D–15
Reassembly	6D–22
Starter Motor	6D–26
Removal and Installation	6D–26
Disassembly	6D–27
Inspection and Repair	6D–30
Reassembly	6D–35
Pre-heating System	6D–38
Inspection and Repair	6D–38
Troubleshooting	6D–41
QOSII Preheating System	6D–56
QOSII System Troubleshooting	6D–59

MAIN DATA AND SPECIFICATIONS

Item		Description	
		4JA1	4JB1T
Alternator			
Type		AC brush with IC regulator and vacuum pump	
Voltage	V	12	
Drive and rotation		V-belt, clockwise viewed from the drive pulley	
Ground polarity		Negative	
Maximum output	A	40/5000 rpm	50/5000 rpm
Engine speed ratio	to 1	1.77	
Maximum speed	rpm	11,000	
Starter Motor			
Type		Solenoid-controlled	
Rated voltage	V	12	
Rated output	kW	2.3	
Load characteristics			
Terminal voltage under full load	V	8.76	
Load current	A	300	
Regulator			
Type		IC	
Vacuum pump			
500 mmHg build-up time		35 seconds or less at 1,000 rpm 10 seconds or less at 5,000 rpm	
Maximum vacuum		680 mmHg or more at 5,000 rpm	
Weight	kg(lb)	6.0 (13.23)	

GENERAL DESCRIPTION

ALTERNATOR

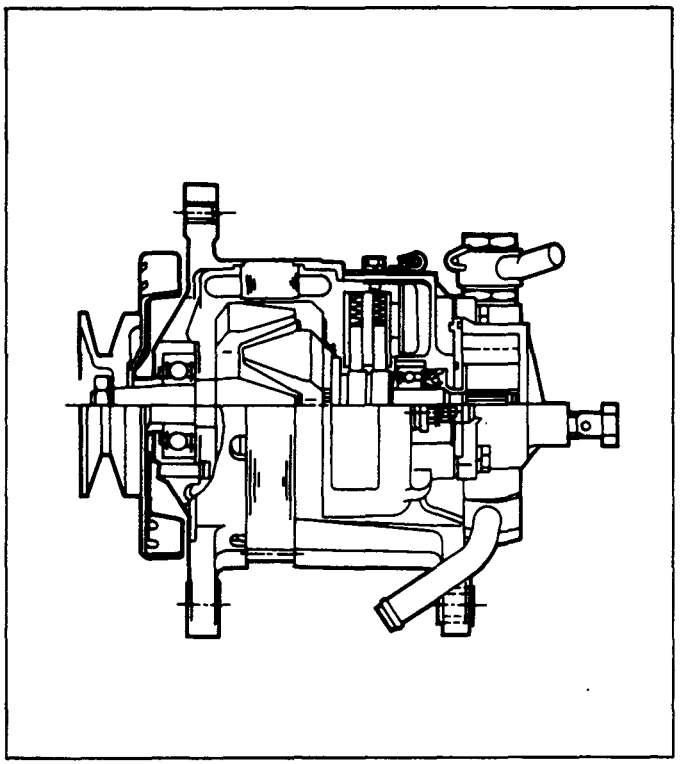

STARTER MOTOR

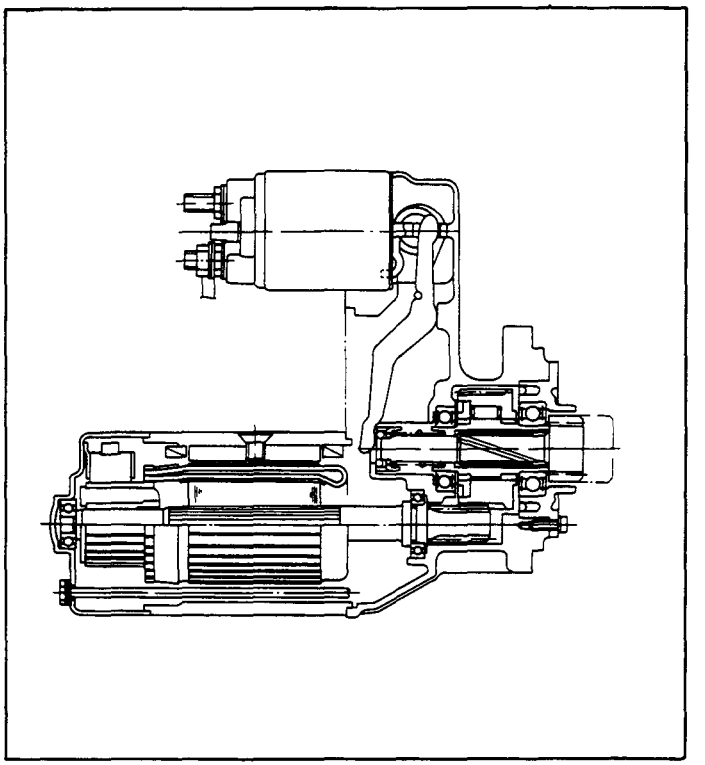

The basic charging system is the IC integral regulator charging system. The internal components are connected electrically as shown in charging circuit diagram.
The alternator features a solid state regulator that is mounted inside the alternator. All regulator components are enclosed into a solid mold, and this unit along with the brush holder assembly is attached to the slip ring end frame. The alternator voltage setting cannot be adjusted.

The starter motor circuit is composed of a 4-pole 4-brush type direct current series motor, starter switch with safety lock, etc. The starter motor circuit utilizes negative ground polarity.

CHARGING CIRCUIT DIAGRAM

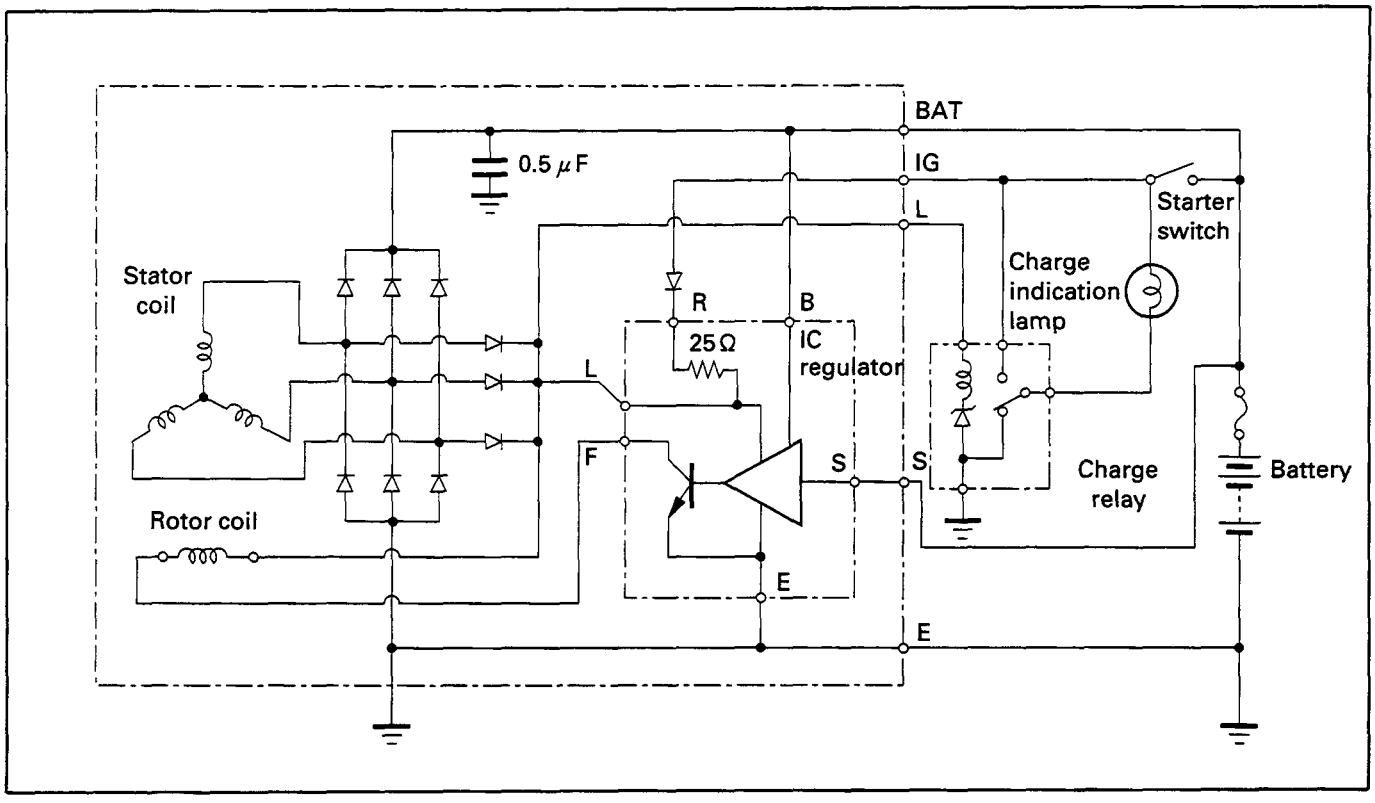

STARTING CIRCUIT DIAGRAM

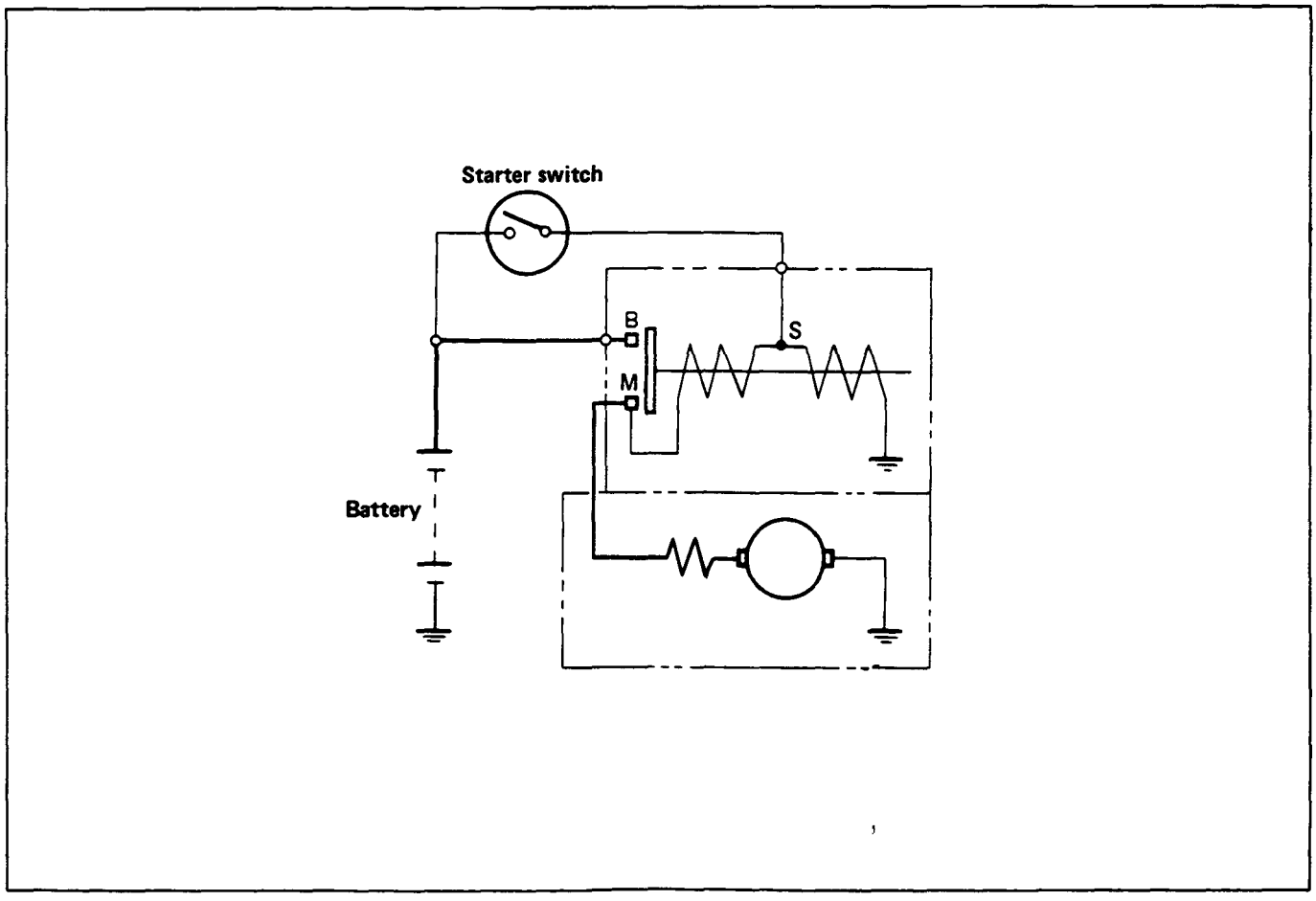

WIRE CODING

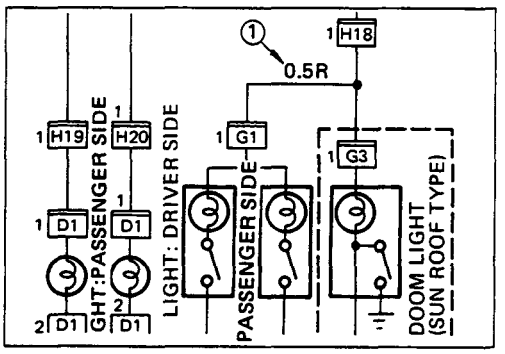

DESCRIPTION

Codes used in the circuit diagram represent wire size and color ①.

Example: 0.5 R

- R — Wire color (Red)
- 0.5 — Wire size (0.5 mm^2)

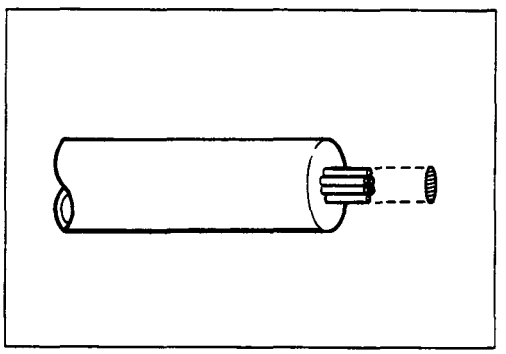

WIRE SIZE

Wire size is specified with the metric gauge system.

The metric gauge system gives the wire size in cross-sectional area measured in square millimeters.

WIRE SIZE SPECIFICATIONS

Wire size		Number of wires/ Wire diameter mm(in.)	Resistance at normal room temperature of 20°C (68°F) Ω/m(Ω/ft.)	Maximum allowable current A
mm^2	AWG			
0.5	20	7/0.32 (0.013)	0.03250 (0.00991)	11.3
0.85	18	11/0.32 (0.013)	0.02050 (0.00625)	14.8
1.25	16	16/0.32 (0.013)	0.01410 (0.00430)	18.8
2	14	26/0.32 (0.013)	0.00867 (0.00264)	25.4
3	12	41/0.32 (0.013)	0.00550 (0.00168)	34.2
5	10	65/0.32 (0.013)	0.00347 (0.00106)	45.9
8	8	50/0.45 (0.018)	0.00228 (0.00070)	59.8
15	6	84/0.45 (0.018)	0.00136 (0.00042)	82.8
20	4	41/0.80 (0.031)	0.00087 (0.00027)	110.9
30	2	70/0.80 (0.031)	0.00051 (0.00016)	147.0

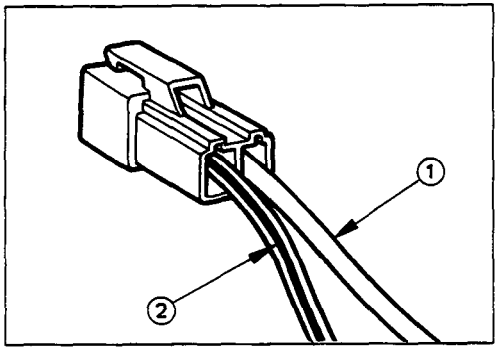

WIRE COLOR

All wires have color-coded insulation.

Wires belonging to a system's main harness will have a single color ①.

Wires belonging to a system's sub-circuits will have a colored stripe ②.

Striped wires use the following code to show wire size and colors.

Example: 0.5 G R

- 0.5 — Wire size (0.5 mm^2)
- G — Green (Base color)
- R — Red (Stripe color)

Abbreviations are used to indicate wire color within a circuit diagram.

Refer to the following table.

WIRE COLOR-CODING

Color-coding	Meaning	Circuits
B	Black	Starter circuit and grounding circuit
W	White	Charging circuit
R	Red	Lighting circuit
G	Green	Signal circuit
Y	Yellow	Instrument circuit
L	Blue	Wiper circuit
O	Orange	Other circuits
Br	Brown	
Lg	Light green	
Gy	Grey	
P	Pink	
Sb	Sky blue	
V	Violet	

SYMBOLS AND ABBREVIATIONS

DESCRIPTION

The symbols and abbreviations used in the circuit diagram make the diagram easier to read and understand.

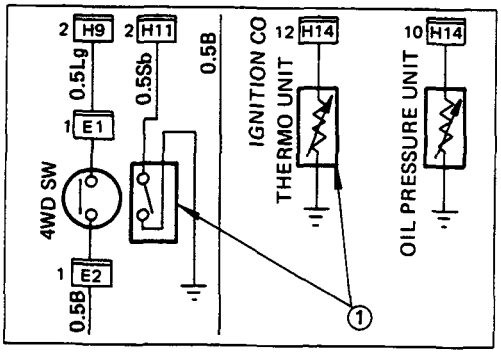

SYMBOLS

The illustration at the left shows a typical symbol ① used in circuit diagrams.

Refer to the following table.

SYMBOL AND MEANING

Symbol	Meaning	Symbol	Meaning
	Fuse		Single filament bulb
	Main fuse		Double filament bulb
	Fusible link wire		Motor
	Switch		Variable resistor
	Switch		Coil (Inductor)

Symbol	Meaning	Symbol	Meaning
	Contact wiring		Relay **Note:** **Relay contact shown in the wiring diagram indicates condition before actuation.**
	Battery		
	Diode		Connector
	Electronic part		Light emitting diode
	Resistor		Reed switch
	Speaker		Condenser

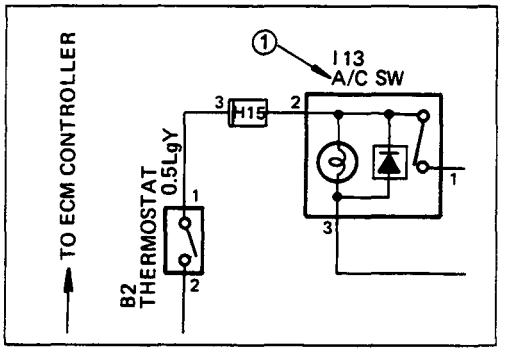

ABBREVIATIONS

The illustration at the left shows a typical abbreviation ① used in circuit diagrams.

These same abbreviations may also appear in the text.

Refer to the following table.

ABBREVIATION AND MEANING

Abbreviation	Meaning	Abbreviation	Meaning
RH	Right-hand side	STD	Standard equipment
LH	Left-hand side	OPT	Optional equipment
SW	Switch	W/	With
M/T	Manual transmission	WO/	Without
A/T	Automatic transmission	OD	Overdrive
FT	Front	ACC	Accessories
RR	Rear	A/C	Air conditioner
FLW	Fusible link wire	ATF	Automatic transmission fluid
TEMP	Temperature	VSV	Vacuum switching valve
ECM	Electronic control module		

TORQUE SPECIFICATIONS

STARTER MOTOR

kg·m(ft.·lbs/N·m)

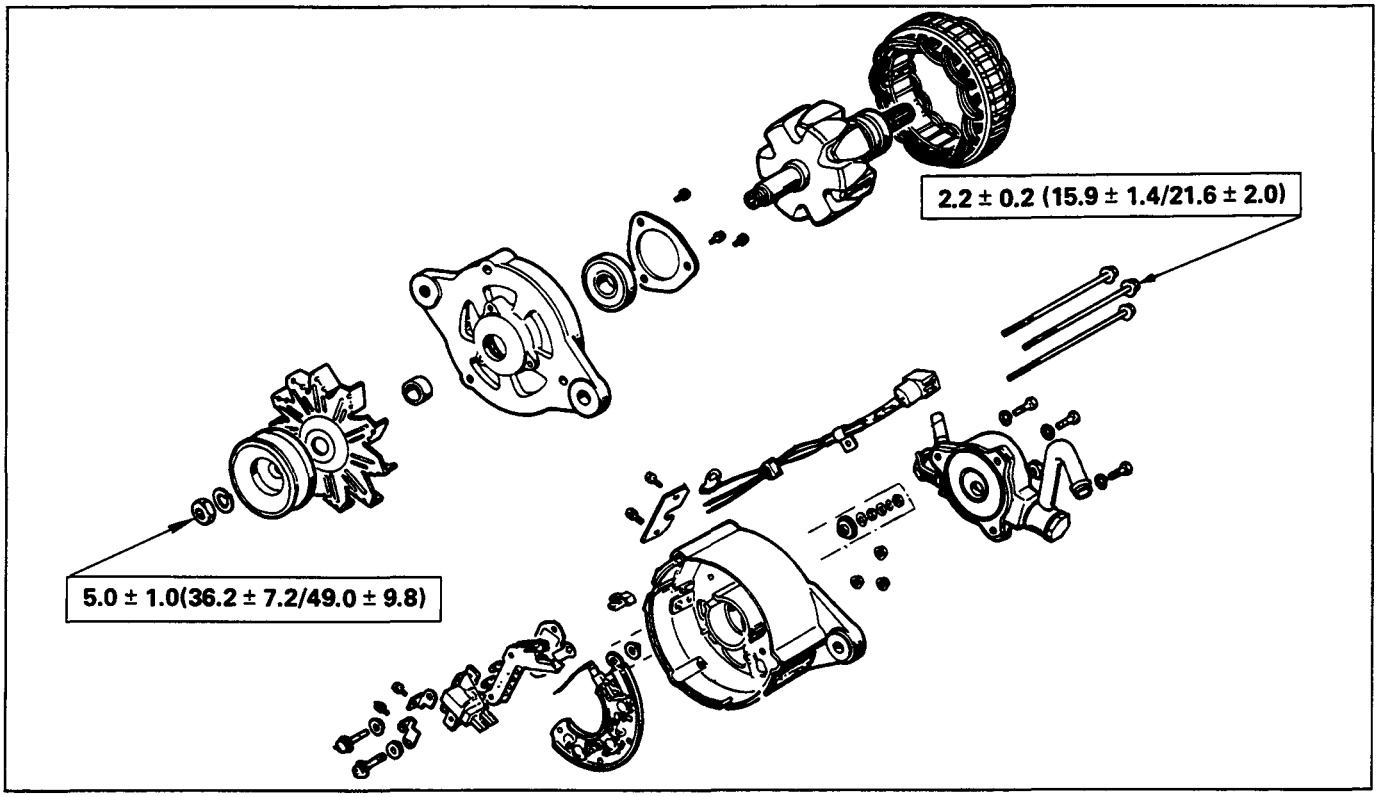

ALTERNATOR

kg·m(ft.·lbs/N·m)

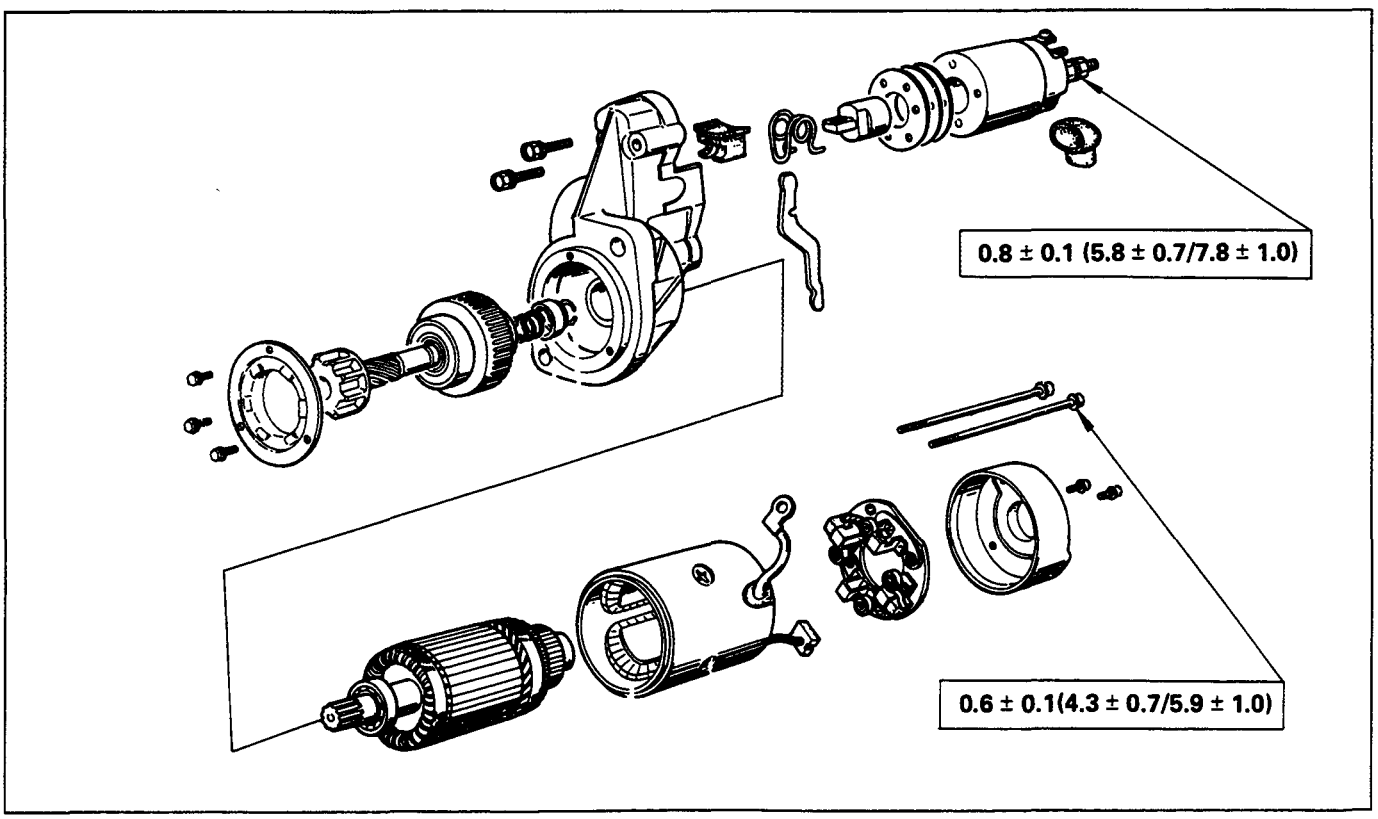

ALTERNATOR

REMOVAL AND INSTALLATION

Read this Section carefully before performing any removal and installation procedure. This Section gives you important points as well as the order of operation. Be sure that you understand everything in this Section before you begin.

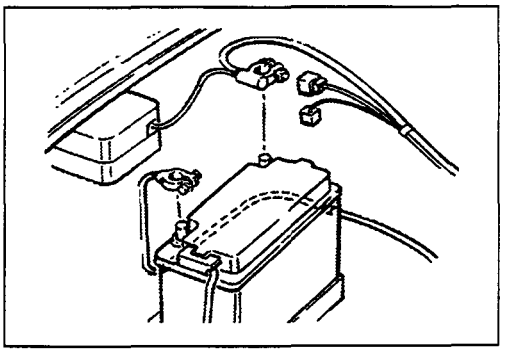

Important Operations – Removal

Cooling Fan Belt

1) Disconnect the battery cables at the battery terminals.
2) Loosen and remove the fan belt adjusting plate bolts.
3) Remove the fan belt from the alternator drive pulley.

Alternator

Remove the alternator bolt and the alternator from the bracket.

Important Operations – Installation

Follow the removal procedure in the reverse order to perform the installation procedure. Pay careful attention to the important points during the installation procedure.

Alternator

1) Install the alternator to the bracket.
2) Tighten the alternator bolt to the specified torque.

Alternator Bolt Torque	kg•m(lb.ft/N•m)
	3.8 ± 1.0 (27.5 ± 7.2/37.2 ± 9.8)

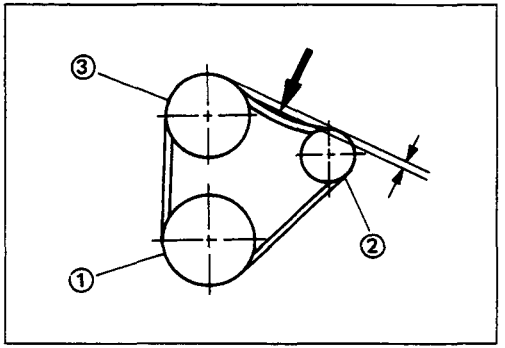

Cooling Fan Belt

1) Hold the alternator toward the engine.
2) Install the fan belt to the three pulleys.
   (1) Crankshaft pulley
   (2) Water pump pulley
   (3) Alternator pulley

3) Adjust the fan belt tension.
   (1) Use a bar to pull the alternator away from the engine as far as possible.
   (2) Use your hand to apply a pressure of 10 kg (22 lb/98N) to the area of the fan belt indicated by the arrow in the illustration.

   There should be from 8 — 12 mm (0.3 — 0.5 in) of belt deflection.

4) Tighten the adjusting plate bolts to the specified torque.

Pulley Nut Torque	kg·m(lb·ft/N·m)
1.9 ± 0.5 (13.7 ± 3.6/18.6 ± 4.9)	

5) Reconnect the battery cable to the battery.

DISASSEMBLY

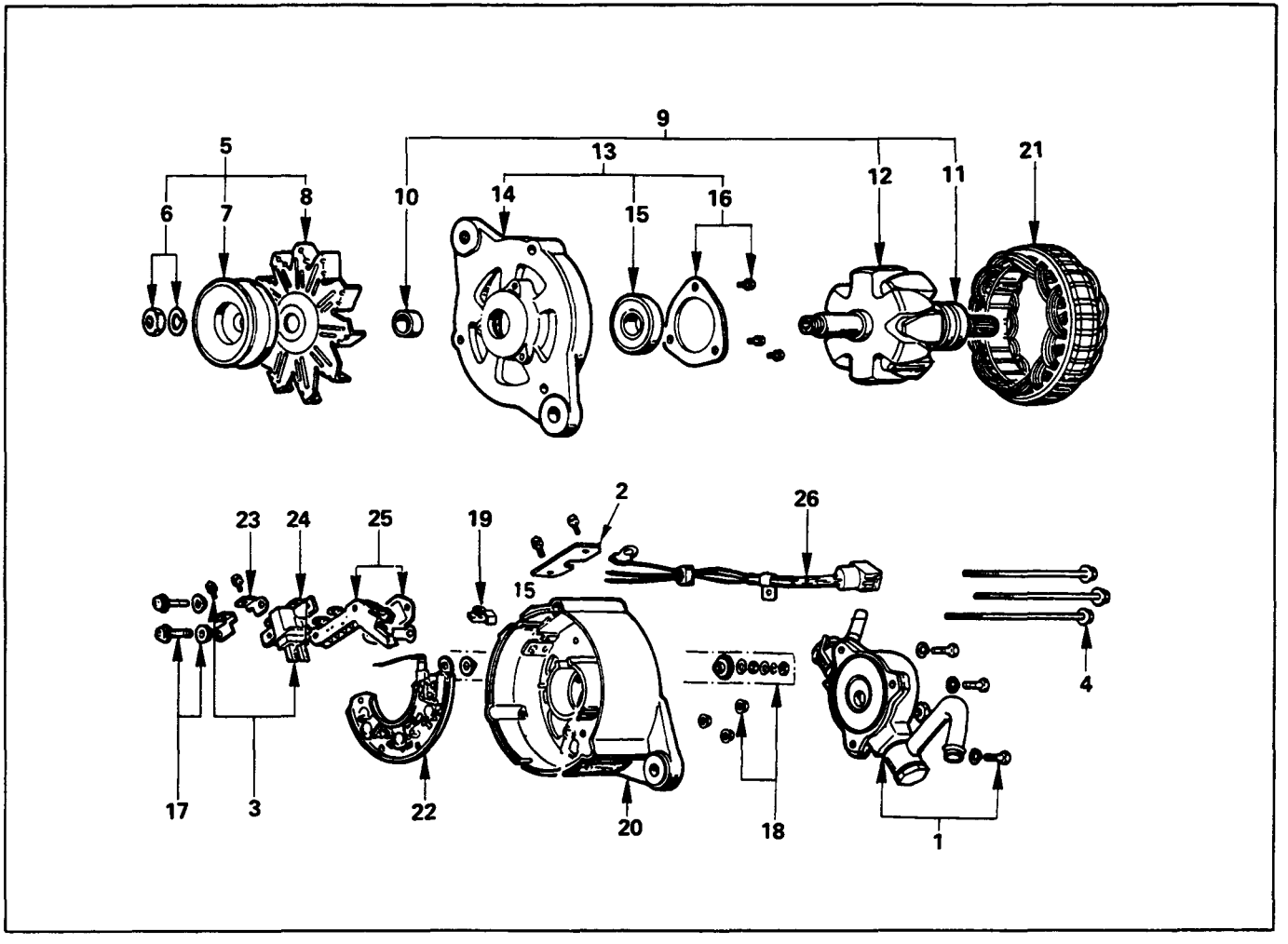

Disassembly Steps

- ▲ 1. Vacuum pump
- ▲ 2. Cover
- ▲ 3. Brush
- ▲ 4. Through bolt
- ▲ 5. Pulley assembly
- 6. Pulley nut
- 7. Pulley
- 8. Fan
- ▲ 9. Rotor assembly
- 10. Spacer
- 11. Ball bearing
- 12. Rotor
- ▲ 13. Front cover assembly
- 14. Front cover
- 15. Ball bearing
- 16. Bearing retainer
- 17. Screw
- ▲ 18. Terminal bolt and nut
- 19. Condenser
- ▲ 20. Rear cover
- ▲ 21. Stator
- ▲ 22. Diode
- 23. Holder plate
- 24. Brush holder
- ▲ 25. IC regulator assembly
- 26. Lead wire

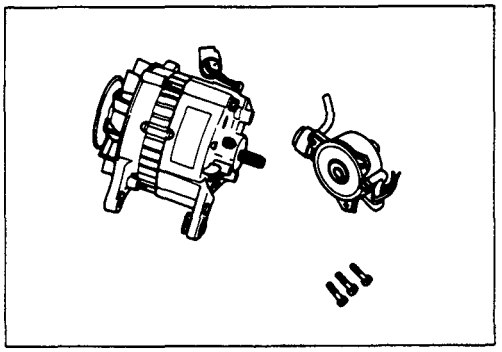

Important Operations

1. Vacuum Pump

1) Loosen the vacuum pump fixing bolts.
2) Support the vacuum pump center plate.
3) Carefully remove the vacuum pump.

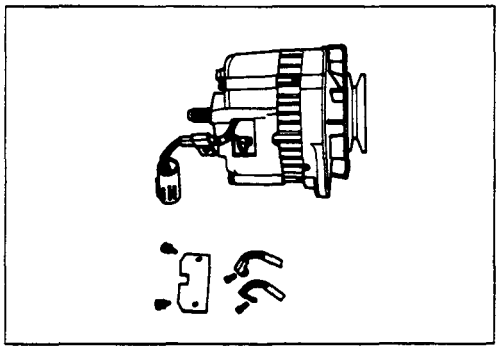

2. Cover

3. Brush

1) Remove the cover.
2) Remove the brush fixing bolts.
3) Remove the brushes from the brush holder.

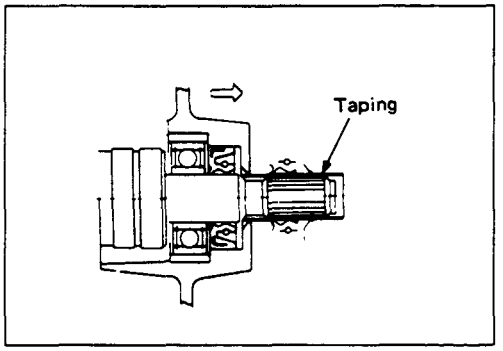

4. Through Bolt

9. Rotor Assembly

1) Loosen the through bolts.
2) Remove the rotor and front cover assembly from the stator and rear cover assembly.

   Do not allow the stator to separate from the rear cover.

   Take care not to damage the oil seal.
3) Tape the rotor splines to protect them from damage.

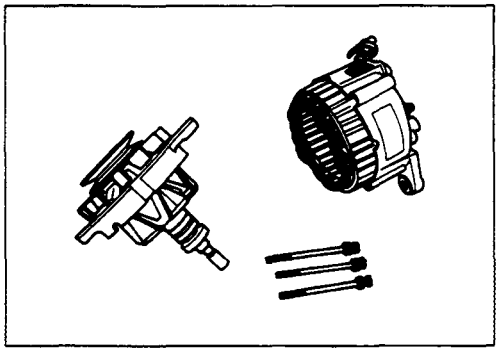

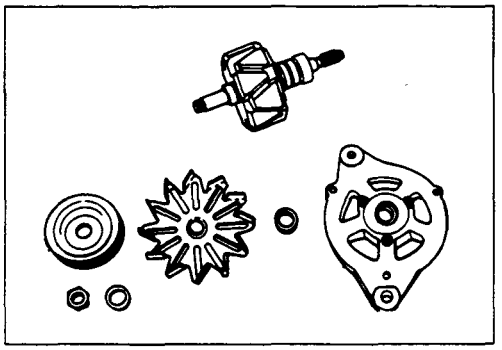

5. Pulley Assembly

1) Carefully clamp the rotor assembly in a vise.
2) Loosen the pulley nut.
3) Remove the pulley and the front cover from the rotor.

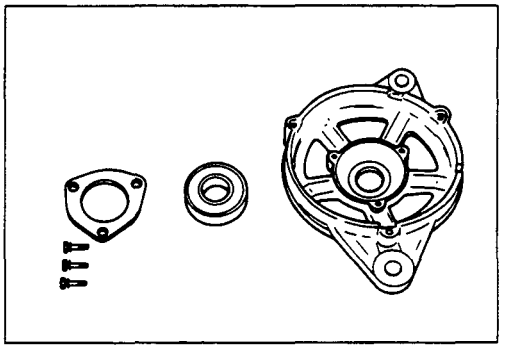

13. Front Cover Assembly

1. Remove the front cover bearing retainer screws.
2. Remove the bearing.

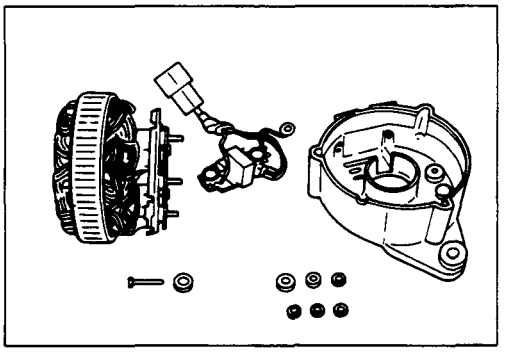

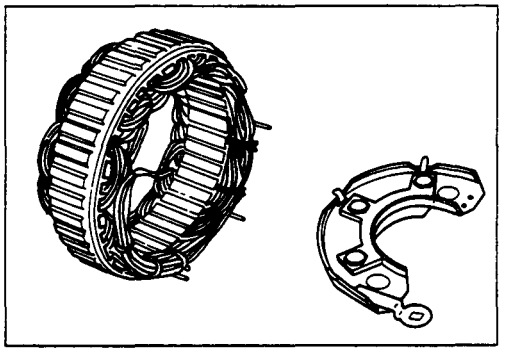

18. Terminal Nut and Bolt

20. Rear Cover

21. Stator

22. Diode

1) Loosen the terminal nuts and bolts.
2) Remove the insulators and the washers.
3) Remove the stator together with the diodes.
4) Disconnect the stator coil leads between each diode and the N-terminal by melting the solder connection.

   Hold the lead wire between the solder and the diode with a pair of long nose pliers.

   This will prevent heat transfer and resultant damage to the diode.

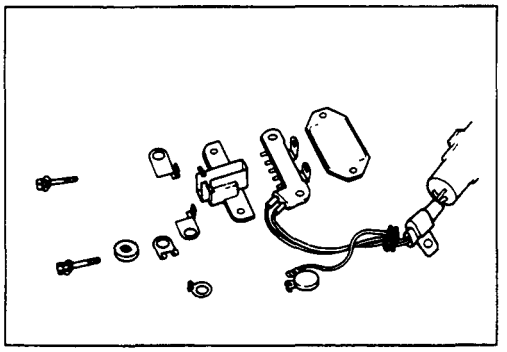

25. IC Regulator Assembly

1) Melt away the solder from the IC regulator holder plate terminal.
2) Remove the IC regulator assembly.

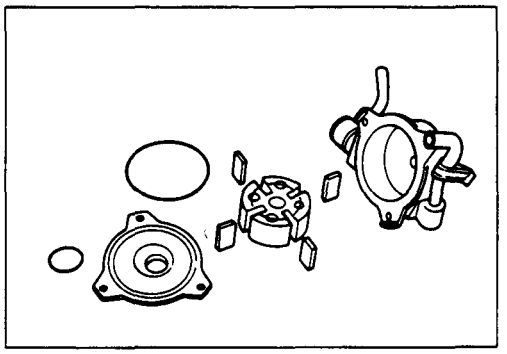

Remove the center plate, rotor and vane in the vacuum pump.

INSPECTION AND REPAIR

Make the necessary adjustments, repairs, and part replacement if excessive wear or damage is discovered during inspection.

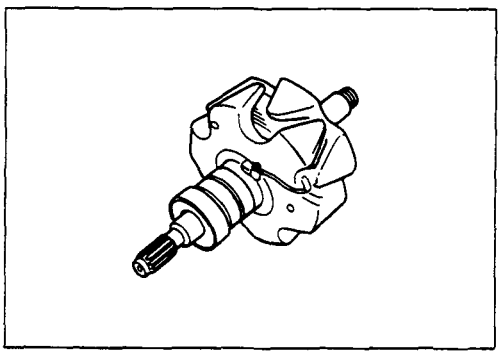

ROTOR ASSEMBLY

1. Inspect the slip ring faces for dirt and pitting. Wipe away any dirt with a clean cloth soaked in alcohol.
2. Measure the slip ring diameter.

Slip Ring Diameter — mm(in)

Standard	Limit
31.6 (1.245)	30.6 (1.183)

If the slip ring diameter is less than the specified limit, the slip rings must be replaced.

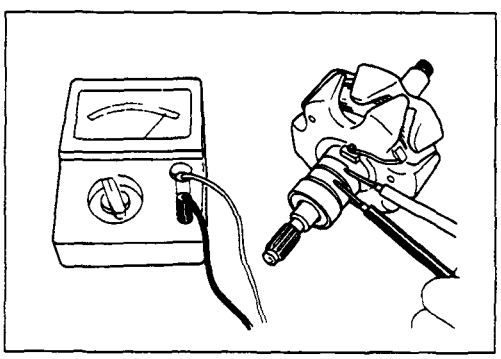

3. Measure the rotor coil resistance.

Rotor Coil Resistance at 20°C (68°F) — ohms

Standard	4.2

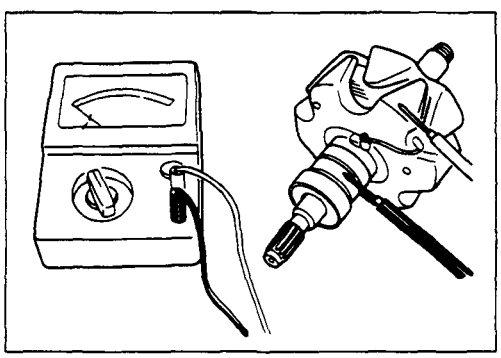

4. Check for continuity between the slip rings and the rotor core or shaft.

   If there is continuity, the entire rotor assmbly must be replaced.

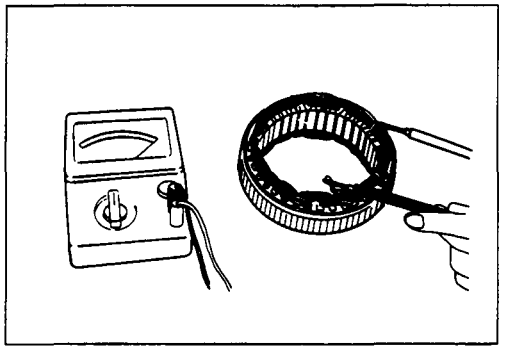

STATOR COIL ASSEMBLY

1. Check for continuity across the stator coils.

   If there is no continuity, the stator coils must be replaced.

Resistance Between The Terminal "N" and the Coil Ends

(Reference) ohms

Standard	0.1

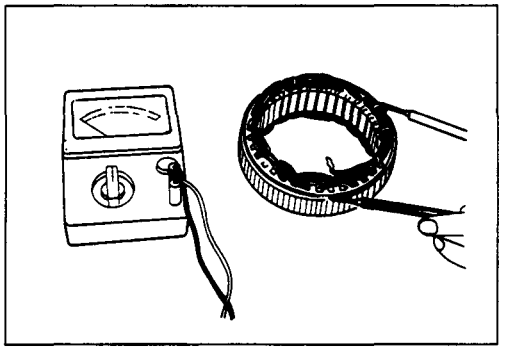

2. Check for continuity between each stator coils and the stator core.

   If there is continuity, the stator coils must be replaced.

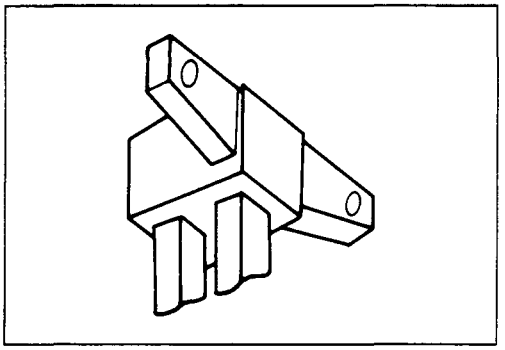

BRUSH

Each brush has a line to indicate whether or not the brush is serviceable.

If the line is not visible, the brush must be replaced.

Brush Length (Reference) mm(in)

Standard	Limit
20 (0.8)	6 (0.2)

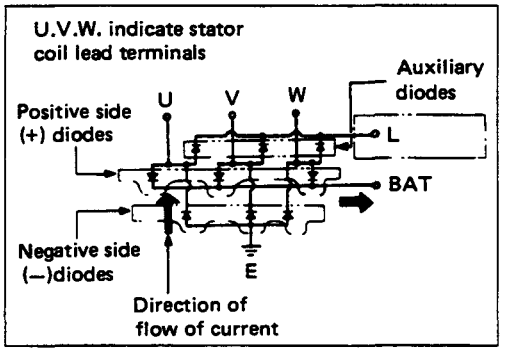

DIODE

1. Check for continuity between the battery and each of the three stator coil lead terminals.
   If there is continuity, the diode is normal.
   If there is no continuity, the diode must be replaced.
2. Reverse the polarity of the test probes.
   If there is no continuity, the diode is normal.
   If there is continuity, the diode must be replaced.

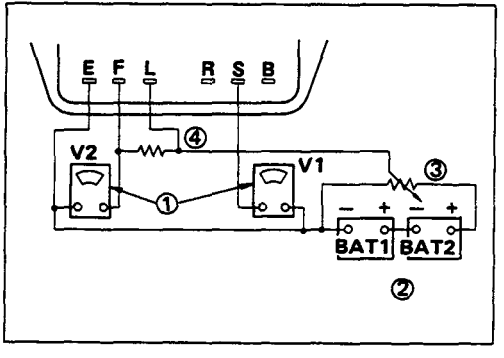

IC REGULATOR

The IC regulator may be tested with either a circuit tester or a pair of standard voltmeters.

Refer to the illustration.

(1) Circuit tester (or voltmeter) range is from 0 to 50 volts in 0.5 volt increments.

(2) Two 12-volt batteries are required.

(3) Note the variable resistor.

(4) This resistor is rated at 100 watts or 3 ohms.

Testing the IC Regulator

Refer to the wiring diagram in the illustration when testing the IC regulator.

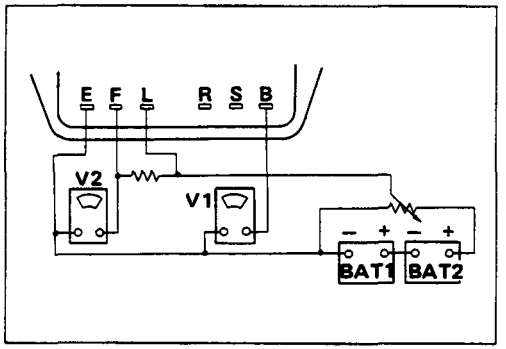

1. Connect the batteries in series.
2. Measure the battery power (voltage).

Battery Power	V
20 — 26	

3. Connect the circuit tester (or voltmeter V2) as shown in the illustration.
4. Set the variable resistor (3) to zero.
5. Slowly increase the resistance of the variable resistor toward the build-up point.

   Measure the voltage between E and F.

   As long as the resistance is below the build-up point, the voltage reading should be stable and less than two volts.

   When the resistance exceeds the build-up point, the voltage reading should be two volts or greater.

   If the voltage does not exceed two volts after reaching the build-up point, the IC regulator must be replaced.
6. Return the variable resistor to zero.
7. Connect the circuit tester (or voltmeter V1) as shown in the illustration.
8. Measure the voltage at terminals S, L, and E.
9. Slowly increase the resistance of the variable resistor.

   Note the point at which the voltage quickly builds up to between 2 and 6 volts.

   This will indicate the point at which the voltage regulator begins to function.

   If the measured voltage is outside the specified range, the voltage regulator must be replaced.

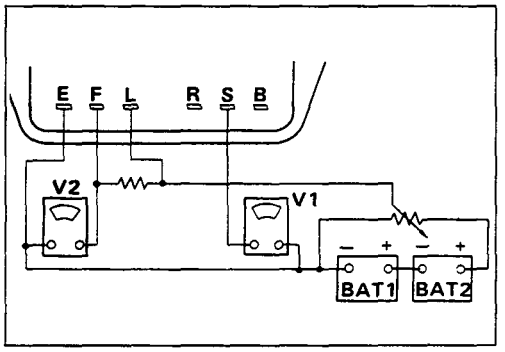

10. Repeat Steps 3 through 5 to measure the voltage between terminals B, L, and E.

    Refer to the illustration.

    The regulator voltage should be between 0.5 and 3 volts higher than the measured voltage.

    If the regulator voltage is outside this range, the voltage regulator must be replaced.

Oil Seal

Check the rear cover oil seal bore for oil leakage.

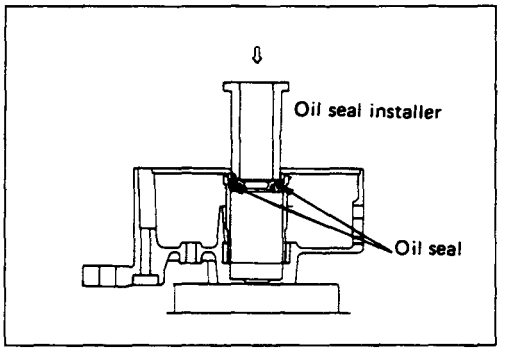

Oil Seal Replacement

1. Use a screwdriver to remove the oil seal from the rear cover side.

   Take care not to damage the oil seal bore.
2. Discard the used oil seal.
3. Use the oil seal installer to install the new oil seal.

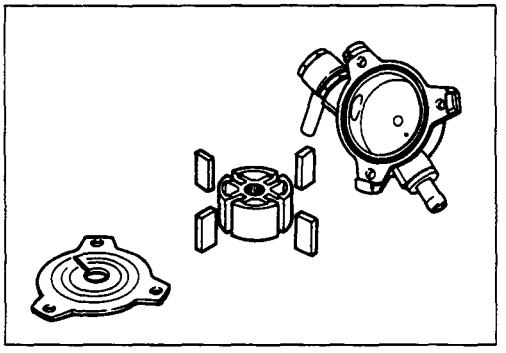

Vacuum Pump

Vacuum Pump Disassembly

1. Remove the center plate from the vacuum pump housing.
2. Remove the vacuum pump rotor and the vanes from the housing.

Inspection

Vacuum Pump Housing and Center Plate

Inspect the vacuum pump housing and the center plate for excessive wear, abrasion, and scoring.

If any of these conditions are present, the vacuum pump housing and center plate must be replaced.

Vane

Inspect the vanes for excessive wear and damage.

Replace all four vanes if either of these conditions are present.

Never replace only one vane.

Rotor

1. Inspect the rotor for excessive wear, abrasion, and scoring.

   Pay particular attention to the internal spline.

   Replace the rotor if any of these conditions are present.
2. Inspect the alternator rotor shaft splines for backlash.

   Replace the rotor if backlash is present.

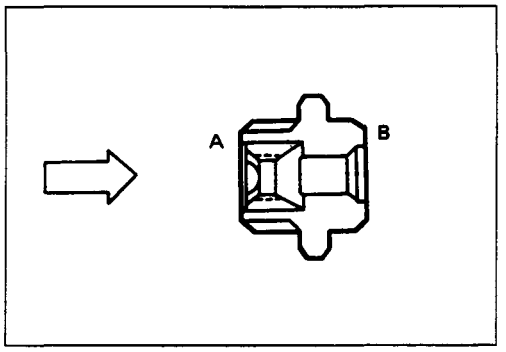

Check Valve

1. Carefully force the valve from the "B" side as shown in the illustration.

   The valve must move smoothly.

   If it does not, the check valve must be replaced.
2. Apply compressed air to the "A" side.

Air Pressure	kg/cm²(psi/kPa)
1 – 5 (14 – 71/98 – 490)	

Check for air leakage from the check valve.

If there is air leakage, the valve must be replaced.

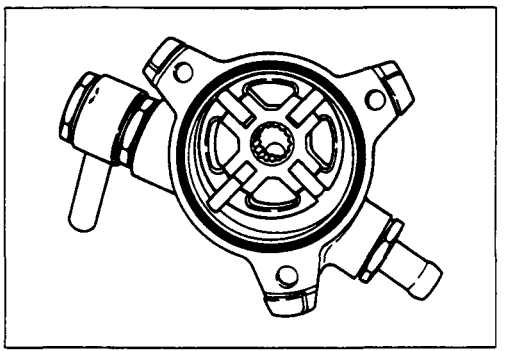

Vacuum Pump Reassembly

1. Install the vanes to the rotor slits.

   The rounded side of the vanes must be facing the rotor housing.

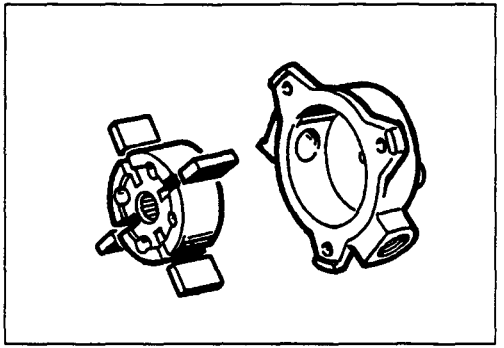

2. Install the rotor with the concave side facing the center plate.

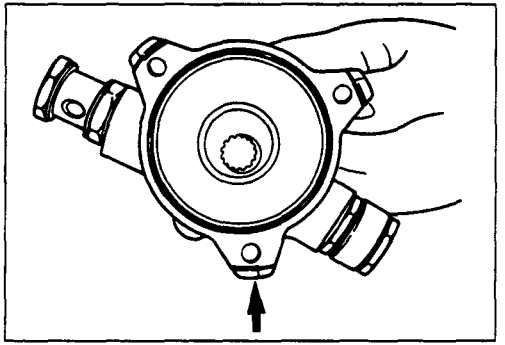

3. Install the center plate to the rotor housing.

   Be sure to use a new O-ring.

REASSEMBLY

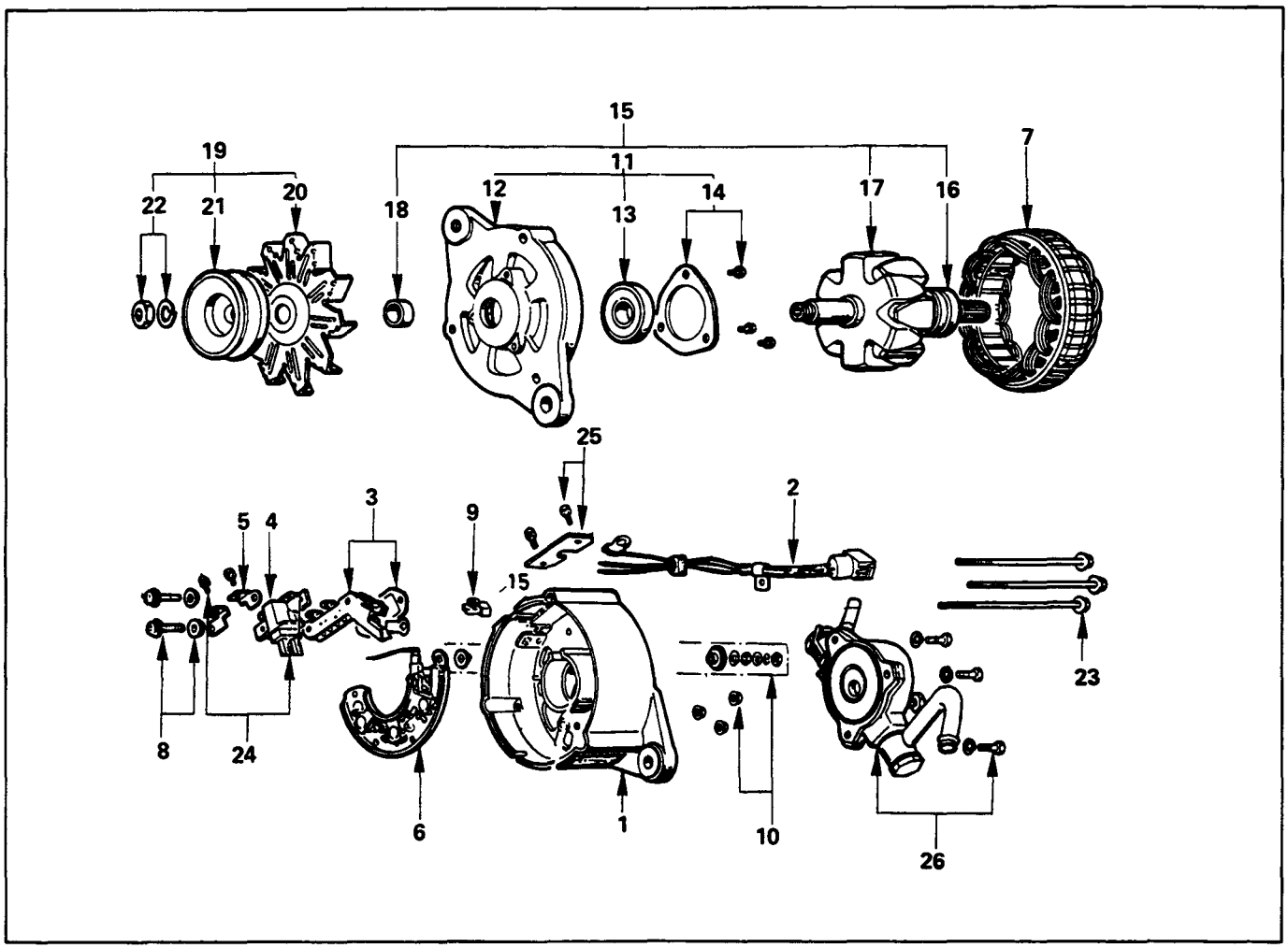

Reassembly Steps

1. Rear cover
▲ 2. Lead wire
▲ 3. IC regulator assembly
4. Brush holder
5. Holder plate
▲ 6. Diode
▲ 7. Stator
8. Screw
9. Condenser
10. Terminal bolt and nut
11. Front cover assembly
12. Front cover
13. Ball bearing
14. Bearing retainer
▲ 15. Rotor assembly
16. Ball bearing
17. Rotor
18. Spacer
▲ 19. Pulley assembly
20. Fan
21. Pulley
22. Nut and washer
▲ 23. Through bolt
▲ 24. Brush
▲ 25. Cover
▲ 26. Vacuum pump

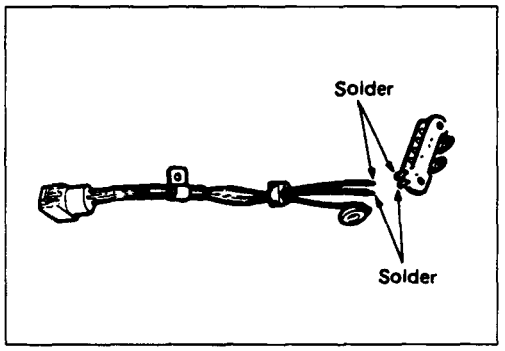

Important Operations

2. Lead Wire

3. IC Regulator

Solder the IC regulator lead wires.

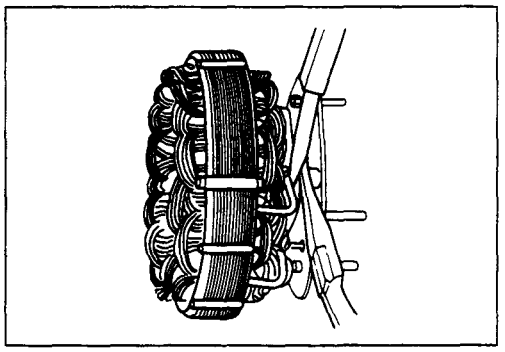

6. Diode

7. Stator

Use a pair of long-nose plier to connect the stator coil leads and the diode leads.

Finish the work as quickly as possible to prevent the diode from heat transferred by the soldering.

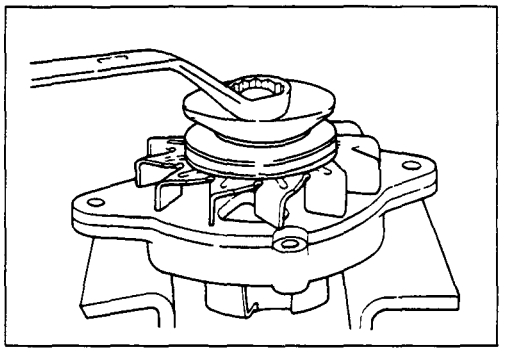

15. Rotor Assembly

19. Pulley Assembly

Clamp the rotor in a vise and install the pulley nut.

Pulley Nut Torque	kg·m(lb·ft)
5.0 ± 1.0 (36.2 ± 7.2/49.0 ± 9.8)	

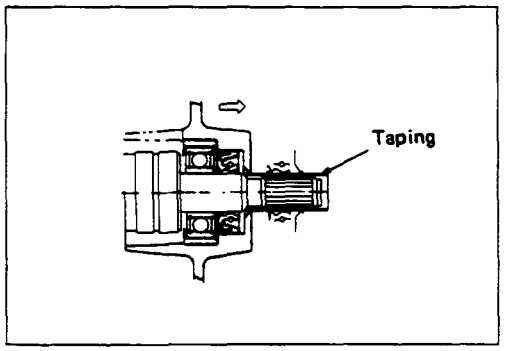

Remove the tape from the splines.

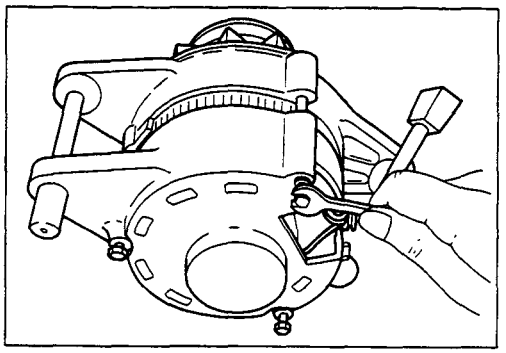

23. Through Bolt

1. Place a pilot bar into the through bolt hole to align the front cover and the rear cover.
2. Install the through bolts and tighten them to the specified torque.

Through Bolt Torque	kg·m(lb·ft)
0.65 ± 0.5 (4.7 ± 3.6/6.3 ± 4.9)	

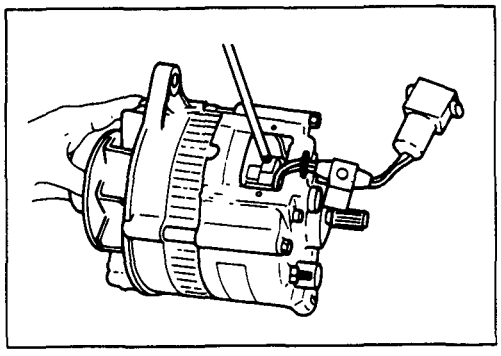

24. Brush

Install the brush into the brush holders.

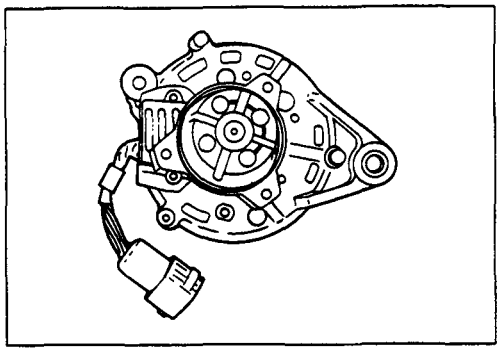

25. Cover

Install the brush cover and tighten the cover bolts to the specified torque.

Brush Cover Bolt Torque	kg·m(lb·ft)
0.35 ± 0.5 (2.5 ± 3.6/3.4 ± 5.0)	

26. Vacuum Pump

Position the rotor, with the serrated boss turned up, on the center plate and housing.
Align the holes in the center plate and the rotor.

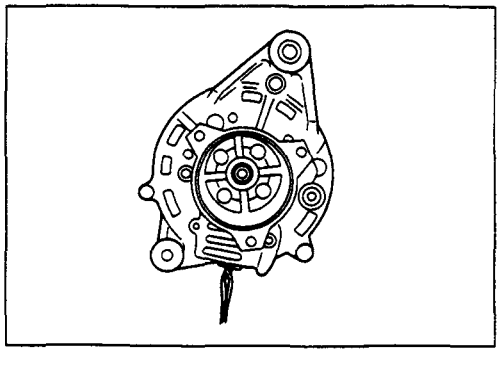

Install vanes into slits in rotor.

The vanes should be installed with the chamfered side facing outward.

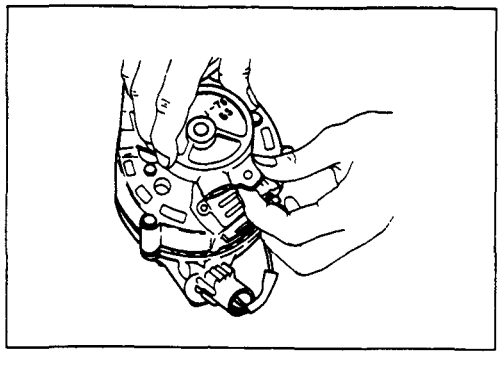

Install the vacuum pump housing.

Make sure that the O-ring is not projecting beyond the slots of the center plate.

Take care so that no scratching takes place on the vane resulted by contact with the housing.

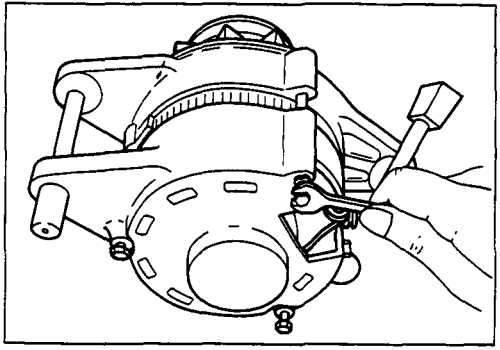

Install the housing in the alternator and fix it with the three bolts.

Supply engine oil (5cc or so) from the oil port and check that the alternator pulley can be turned smoothly with your hand.

Alternator Housing Bolt Torque	kg·m(lb·ft)
0.65 ± 0.5 (4.7 ± 3.6/6.3 ± 4.9)	

STARTER MOTOR

REMOVAL AND INSTALLATION

Read this Section carefully before performing any removal and installation procedure. This Section gives you important points as well as the order of operation. Be sure that you understand everything in this Section before you begin.

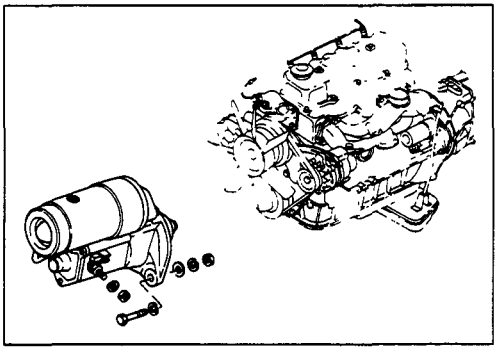

Important Operations – Removal

Starter Motor

1) Disconnect the battery cable and the ground cable at the battery terminals.
2) Disconnect the magnetic switch cable at the terminal bolts.
3) Disconnect the battery cable at the starter motor and the ground cable at the cylinder body.
4) Remove the starter motor from the engine.

Important Operations – Installation

Follow the removal procedure in the reverse order to perform the installation procedure. Pay careful attention to the important points during the installation procedure.

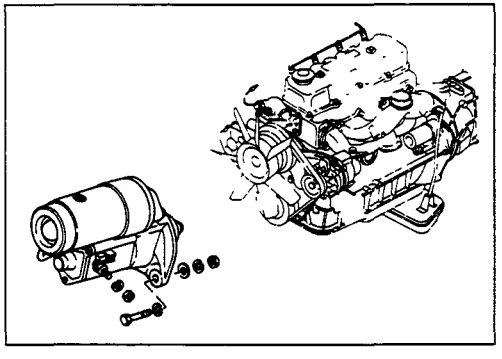

Starter Motor

1) Install the starter motor to the rear plate.
2) Tighten the starter motor bolts to the specified torque.

Starter Motor Bolt Torque	kg·m(lb·ft/N·m)
8.8 ± 1.9 (63.6 ± 16.6/86.2 ± 18.6)	

3) Reconnect the battery cable at the starter motor and the ground cable at the cylinder body.
4) Reconnect the battery cable and the ground cable at the battery terminals.

DISASSEMBLY

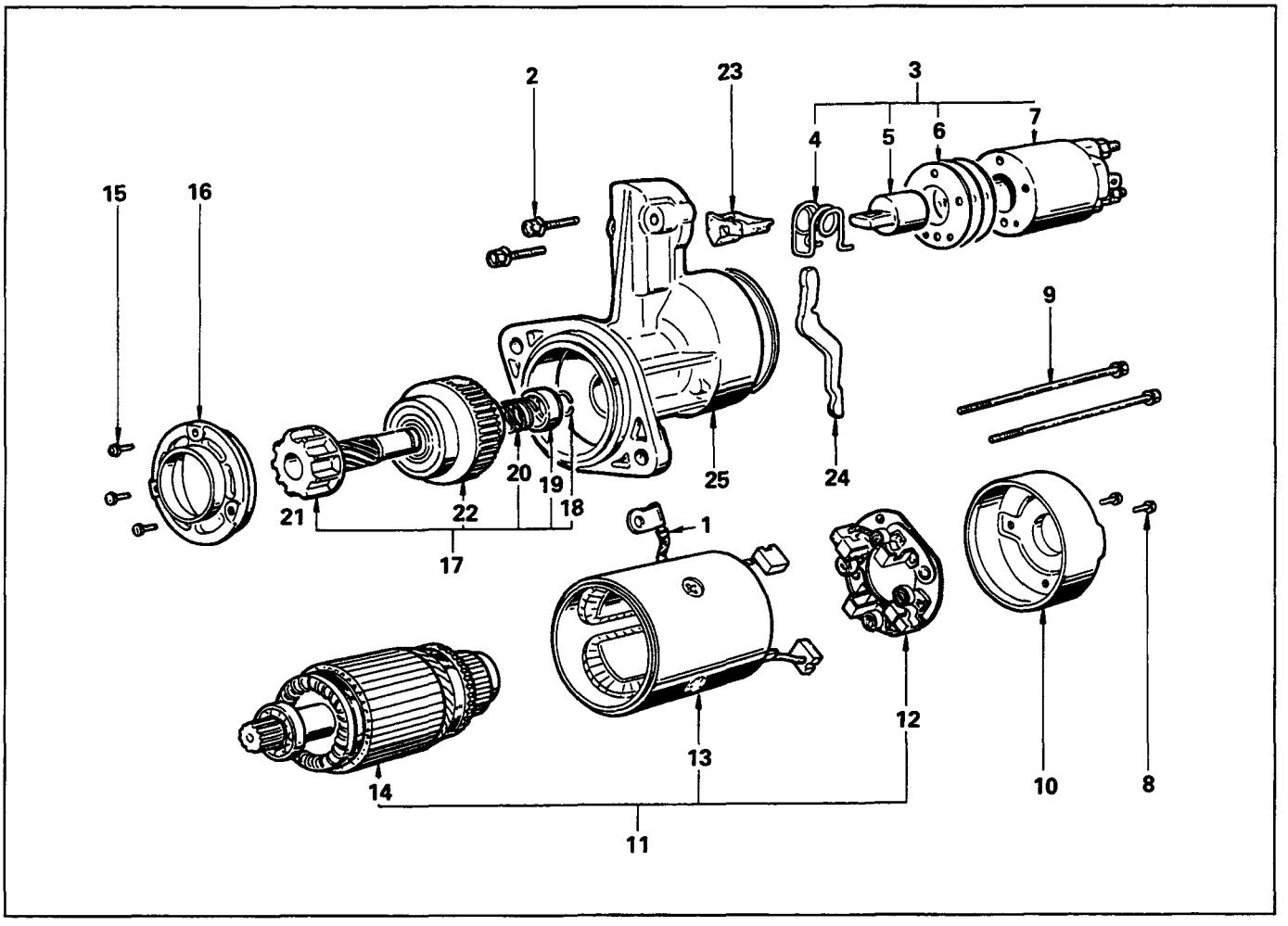

Disassembly Steps

- ▲ 1. Lead wire
- 2. Bolt
- ▲ 3. Magnetic switch assembly
- 4. Torsion spring
- 5. Plunger
- 6. Adjusting shims
- 7. Magnetic switch
- ▲ 8. Screw
- ▲ 9. Through bolt
- ▲ 10. Rear cover
- ▲ 11. Motor assembly
- ▲ 12. Brush holder
- ▲ 13. Yoke
- ▲ 14. Armature
- 15. Screw
- ▲ 16. Bearing retainer
- ▲ 17. Pinion assembly
- 18. Pinion stopper clip
- 19. Pinion stopper
- 20. Return spring
- 21. Pinion shaft
- 22. Clutch
- ▲ 23. Dust cover
- ▲ 24. Shift lever
- ▲ 25. Gear case

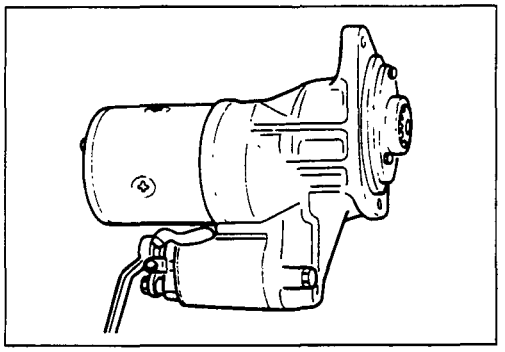

Important Operations

1. Lead Wire

Disconnect the lead wire at the magnetic switch.

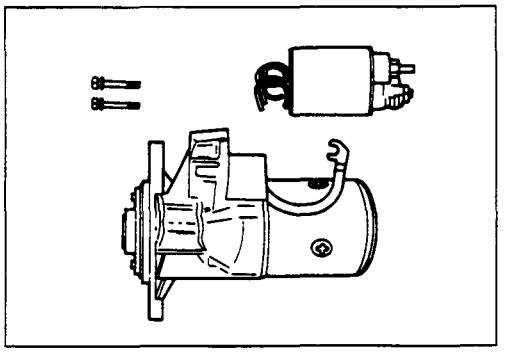

3. Magnetic Switch Assembly

Remove the magnetic switch bolts, then remove the switch from the shift lever.

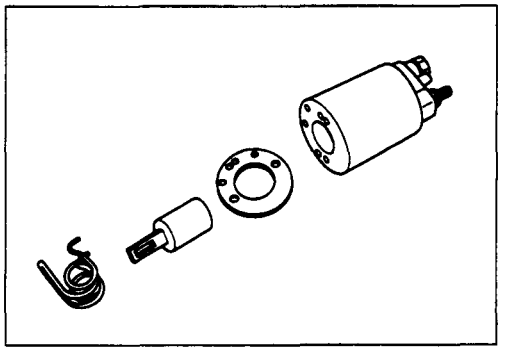

Remove the torsion spring from the magnetic switch.

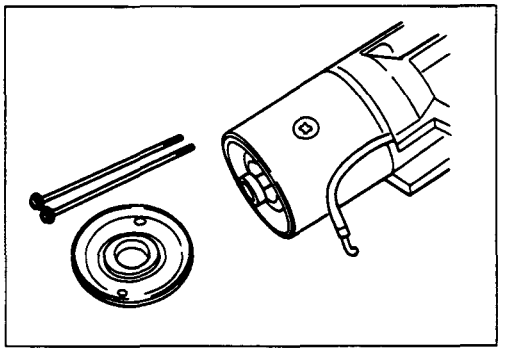

8. Screw

9. Through Bolt

10. Rear Cover

Remove the through bolts, then remove the rear cover.

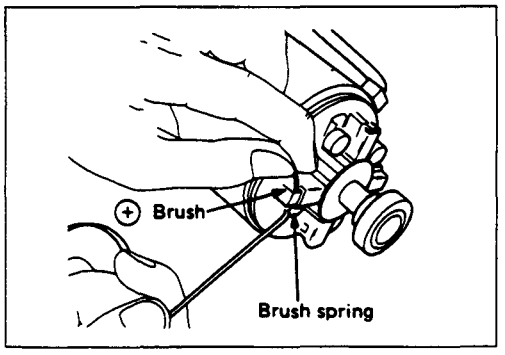

11. Motor Assembly

Remove the four brushes from the brush holders.

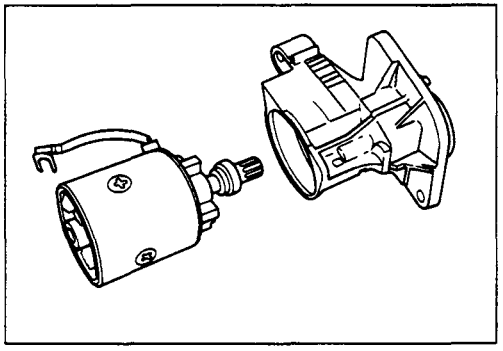

Remove the yoke along with the armature and the brush holder from the gear case.

Remove the brushes and commutator carefully so as not to allow them in contact with the adjacent parts.

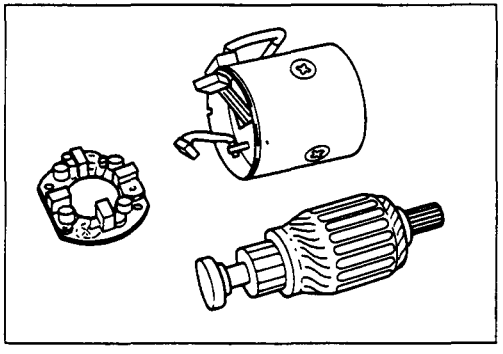

12. Brush Holder

13. Yoke

14. Armature

Remove the brush holder and pull out the armature assembly free from the yoke.

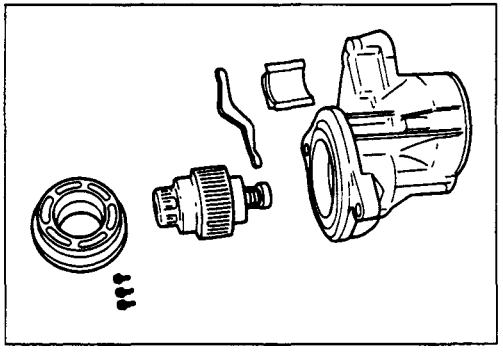

16. Bearing Retainer

17. Pinion Assembly

23. Dust Cover

24. Shift Lever

25. Gear Case

1. Remove the bearing retainer.
2. Remove the pinion from the gear case.

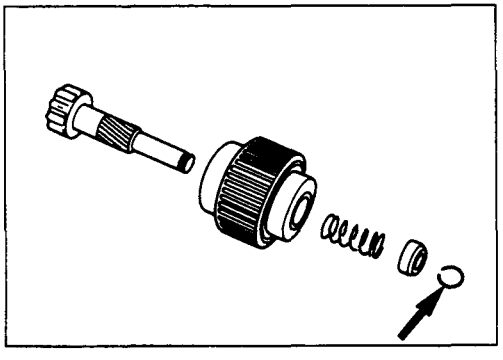

3. Use a screwdriver to remove the stopper clip. Then disassemble the pinion assembly.

INSPECTION AND REPAIR

Make the necessary adjustments, repairs, and part replacement if excessive wear or damage is discovered during inspection.

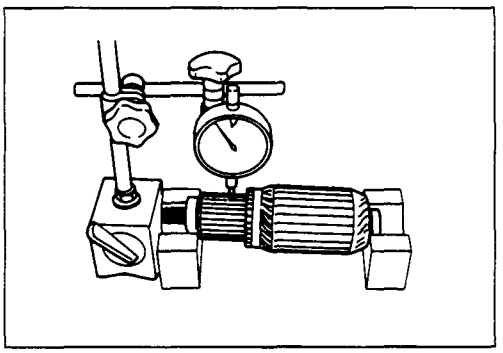

ARMATURE

1. Measure the commutator run-out.

   Replace the commutator if the measured run-out exceeds the specified limit.

Commutator Run-Out mm(in)

Standard	Limit
0.02 (0.001)	0.05 (0.002)

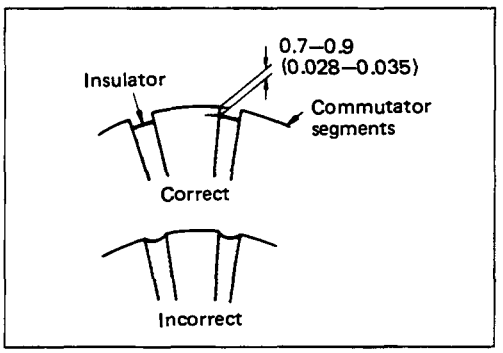

2. Check the commutator mica segments for excessive wear.
3. Measure the mica segment depth.

Mica Segment Depth mm(in)

Standard	Limit
0.7–0.9 (0.028–0.035)	0.2 (0.01)

If the mica segment depth is less than the standard but more than the limit, the commutator may be reground.

If the mica segment depth is less than the limit, the commutator must be replaced.

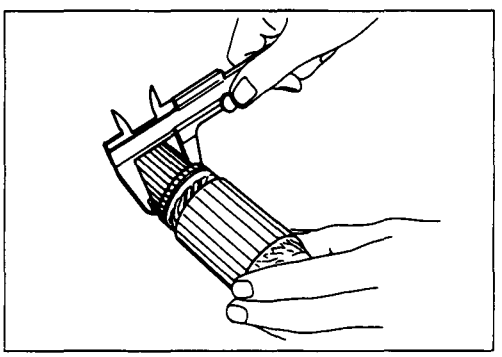

4. Measure the commutator outside diameter.

Commutator Outside Diameter mm(in)

Standard	Limit
35 (1.4)	34 (1.3)

If the measured outside diameter is less than the specified limit, the commutator must be replaced.

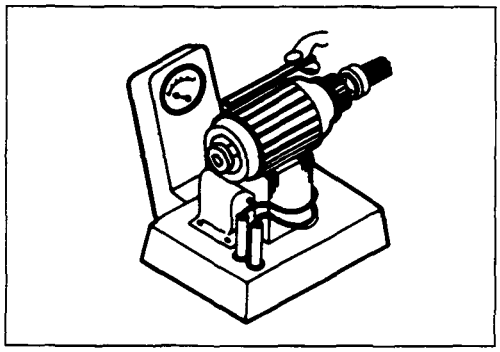

5. Test the armature for short circuiting.
   a. Place the armature in a growler tester.
   b. Hold a hacksaw blade against the armature core.

   If the armature has a short circuit, the hacksaw blade will vibrate.
   Replace the armature if there is a short circuit.

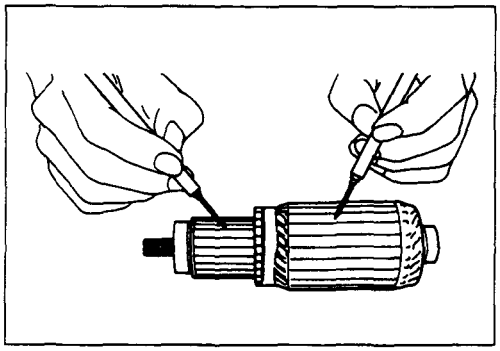

6. Use a circuit tester to check the armature for grounding.
   1) Hold one probe of the circuit tester against the commutator segment.
   2) Hold the other circuit tester probe against the armature core.

   If the circuit tester indicates continuity, the armature is grounded.
   The armature must be replaced.

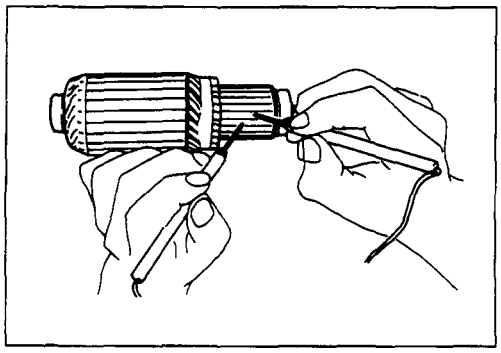

7. Use the circuit tester to check the armature for continuity.
   1) Hold the circuit tester probes against two armature core segments.
   2) Repeat Step 1 at different segments of the armature core.

   There should be continuity between all segments of the armature core.

   If there is not, the armature must be replaced.

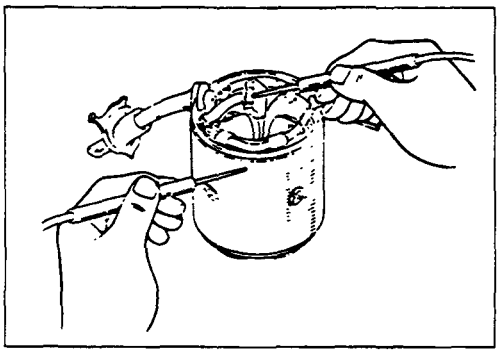

YOKE

1. Use a circuit tester to check the field winding ground.
   1) Hold one circuit tester probe against the field winding end or brush.
   2) Hold the other circuit tester probe against the bare surface of the yoke body.

   There should be no continuity.
   If there is continuity, the field coil is grounded.
   The yoke must be replaced.

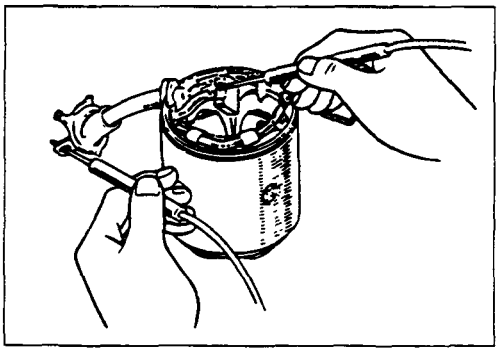

2. Use the circuit tester to check the field winding continuity.
   1) Hold one circuit tester probe against the "C" terminal lead wire.
   2) Hold the other circuit tester probe against the field winding brush.

   There should be continuity.
   If there is no continuity, the yoke must be replaced.

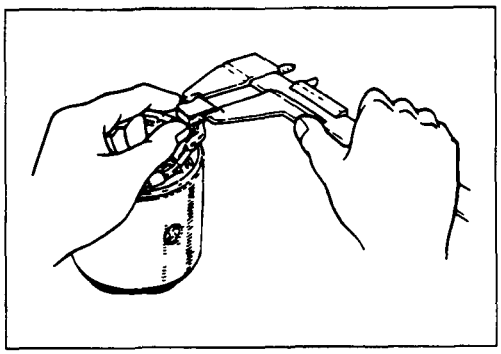

BRUSH AND BRUSH HOLDER

1. Use a vernier caliper to measure the brush length (four brushes).

   Replace the brushes as a set if one or more of the brush lengths is less than the specified limit.

Brush Length mm(in)

Standard	Limit
14.5 (0.57)	9.5 (0.37)

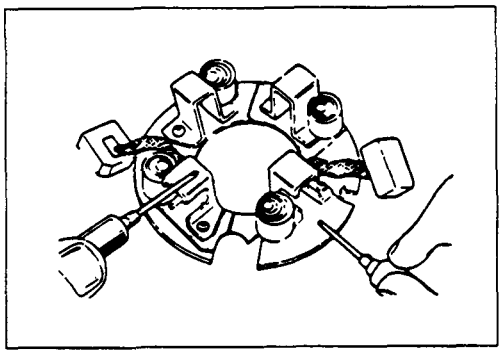

2. Use a circuit tester to check the brush holder insulation.

   Touch one probe to the holder plate and the other probe to the positive brush holder.

   There should be no continuity.

3. Inspect the brushes for excessive wear.

   If the negative brushes have excessive wear, the entire brush holder assembly must be replaced.

   If the positive brushes have excessive wear, only the brushes must be replaced.

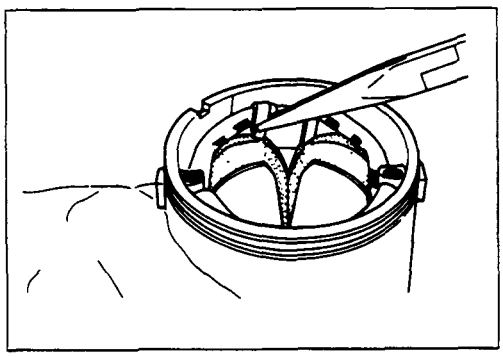

1) Use a pair of side cutters to cut the lead wire from the brush.
2) File away any foreign material clinging to the edge of the lead wire.
3) Remove the brushes from the brush holder.
4) Install the new brushes.

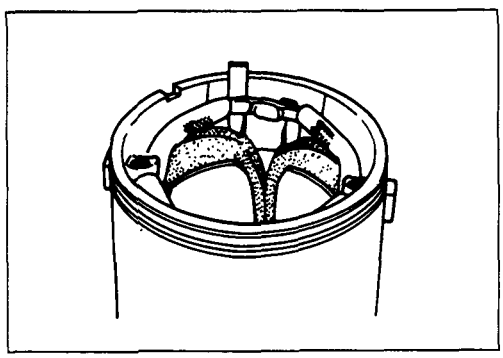

5) Straighten the bent portion of the clip.
6) File away any foreign material clinging to the clip surface.

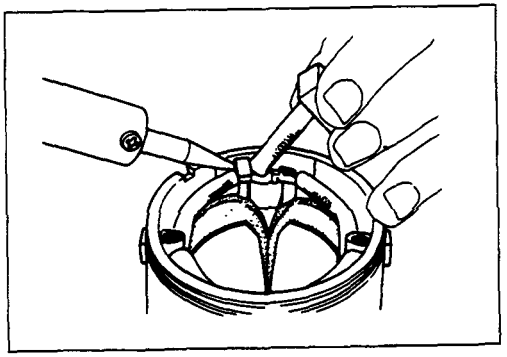

7) Place the lead wire in the clip.
8) Bend the clip shut.
9) Solder the brush lead.
10) Repeat the procedure for each of the brushes.

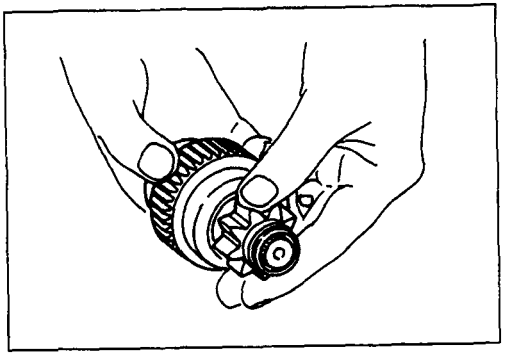

OVERRUNNING CLUTCH

1. Inspect the overrunning clutch gear teeth for excessive wear and damage.
   Replace the overrunning clutch if necessary.
2. Rotate the pinion clockwise.
   It should turn smoothly.
3. Try to rotate the pinion in the opposite direction.
   The pinion should lock.

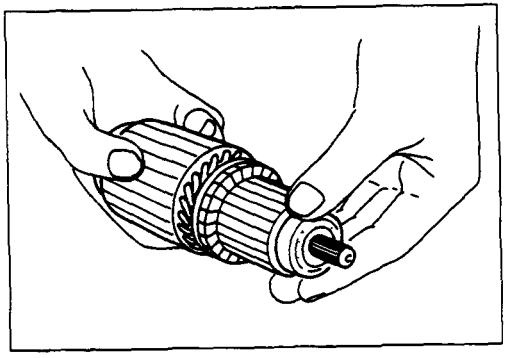

BEARING

Inspect the bearings for excessive wear and damage.
Replace the bearings if necessary.

MAGNETIC SWITCH

The following tests must be performed with the starter motor fully assembled.

The yoke lead wire must be disconnected from the "C" terminal.

To prevent coil burning, complete each test as quickly as possible (within three to five seconds).

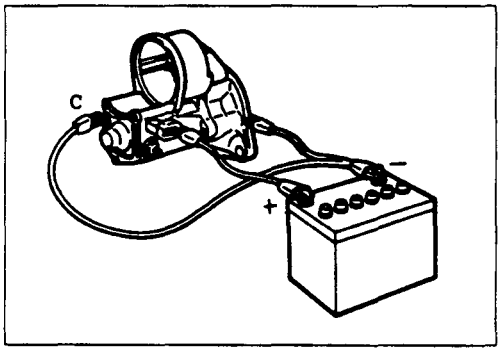

Temporarily connect the solenoid switch between the clutch and the housing and run the following test. Complete each test within three to five seconds.

1. Pull-in Test

Connect the battery negative terminal with the solenoid switch body and the C terminal. When current is applied to the 50 terminal from the battery positive terminal, the pinion should flutter.

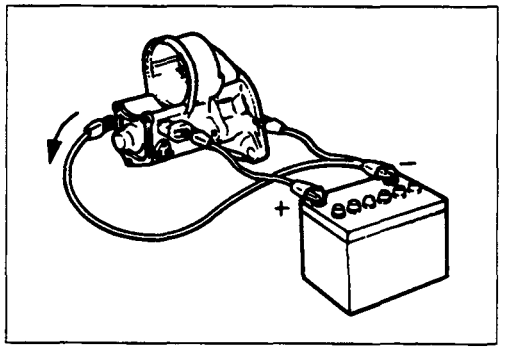

2. Hold-in Maintenance Test

Disconnect the lead at the C terminal. The pinion should continue to flutter.

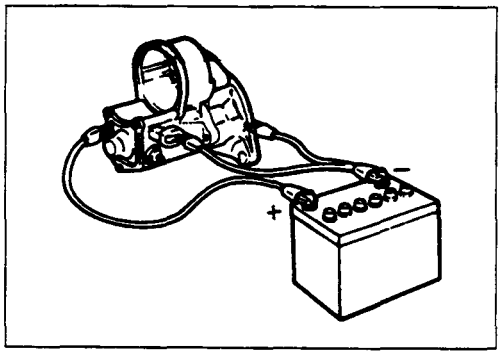

3. Return Test

Connect the battery negative leads to the starter body and the 50 terminal.
Connect the battery positive lead at the C terminal.
The pinion should return to its home position.

REASSEBMBLY

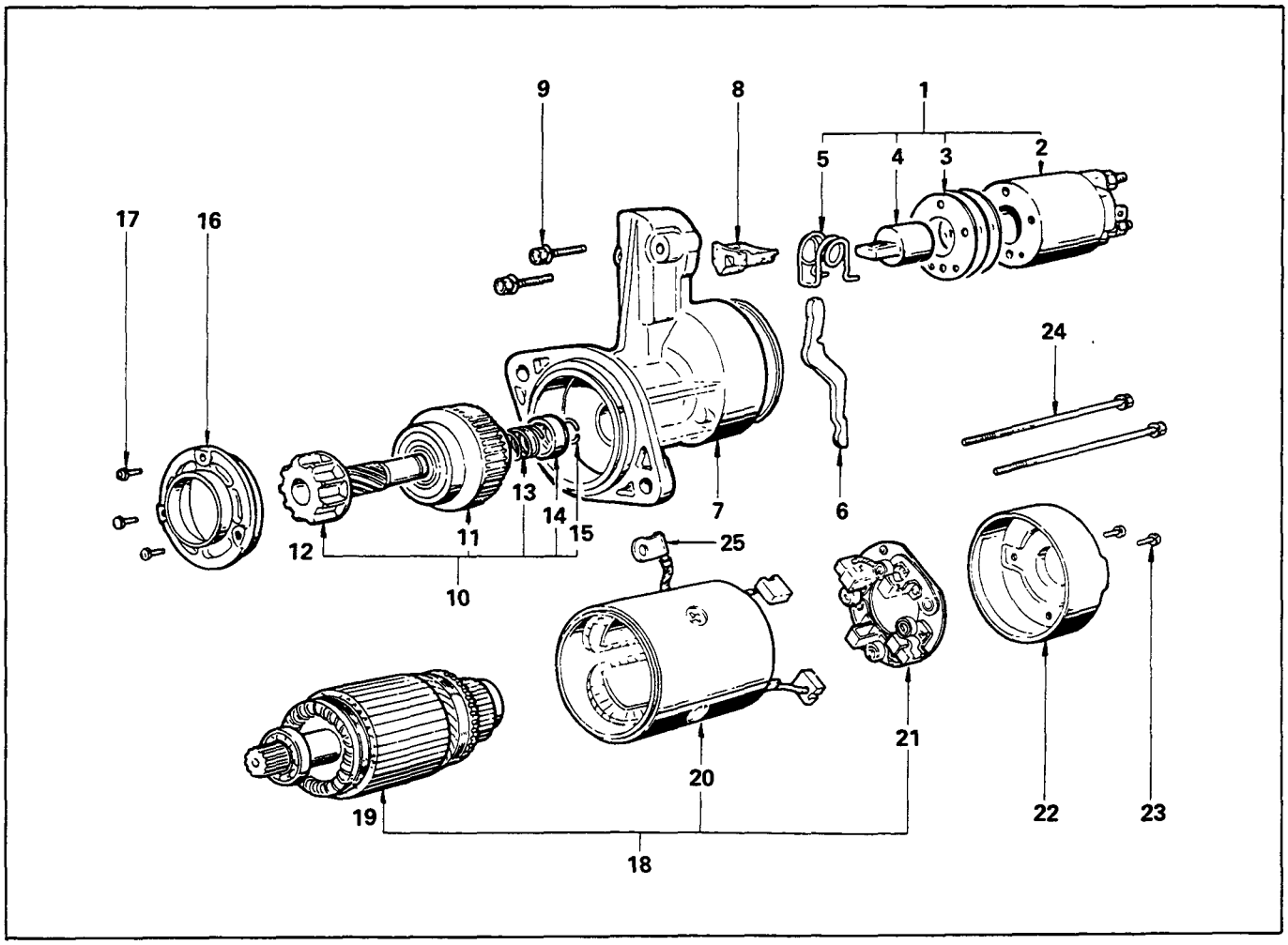

Reassembly Steps

- ▲ 1. Magnetic switch assembly
- 2. Magnetic switch
- 3. Adjusting shims
- 4. Plunger
- 5. Torsion spring
- 6. Shift lever
- ▲ 7. Gear case
- ▲ 8. Dust cover
- 9. Bolt
- ▲ 10. Pinion assembly
- 11. Clutch
- 12. Pinion shaft
- 13. Return spring
- 14. Pinion stopper
- 15. Pinion stopper clip
- 16. Bearing retainer
- 17. Screw
- 18. Motor assembly
- 19. Armature
- 20. Yoke
- ▲ 21. Brush holder
- 22. Rear cover
- 23. Screw
- ▲ 24. Through bolt
- ▲ 25. Lead wire

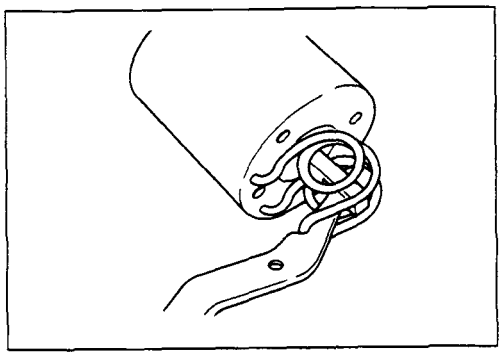

Important Operations

1. Magnetic Switch Assembly

1. Attach the torsion spring to the hole in the magnetic switch as illustrated.
2. Insert the shift lever into the plunger hole of the magnetic switch.

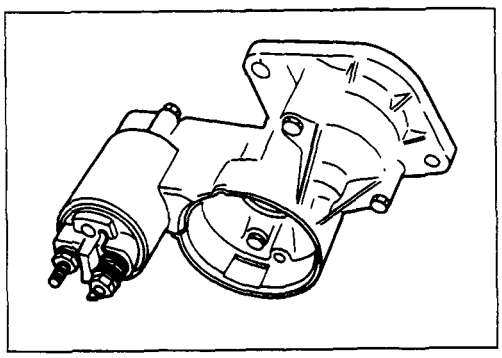

7. Gear Case

8. Dust Cover

1. Install the magnetic switch assembly in the gear case.
2. Install the dust cover.

Dust Cover Bolt Torque	kg·m(lb·ft/N·m)
0.75 ± 0.5 (5.4 ± 3.6/7.4 ± 5)	

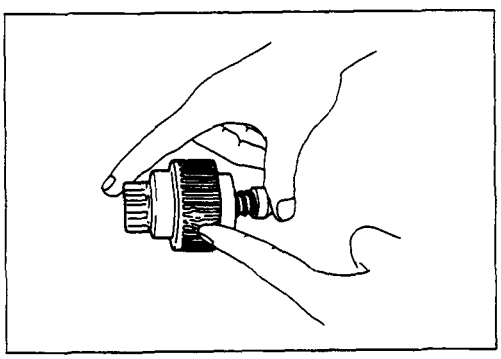

10. Pinion Assembly

Apply a coat of grease to the reduction gear and install the pinion assembly to the armature shaft.

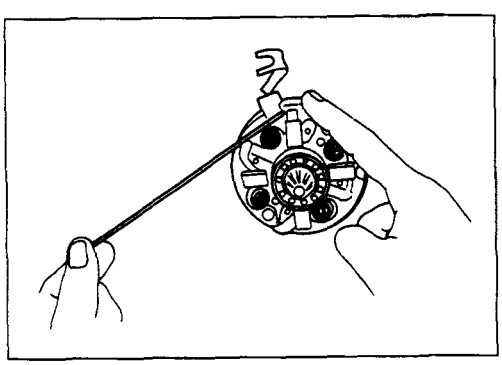

21. Brush Holders

1. Install the brushes into the brush holder with raising the spring end of the brush spring.

   Take care not to damage the commutator face.

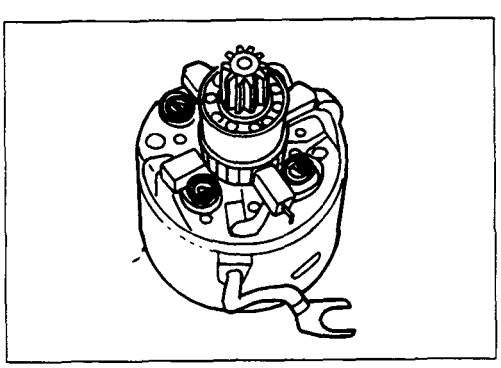

2. Install the brush holder with aligning the peripheries of the yoke and the brush holder.

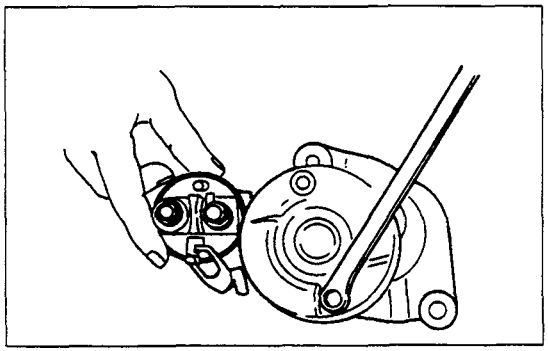

24. Through Bolt

Install the through bolts in the rear cover and tighten them to the specified torque.

Through Bolt Torque	kg·m(lb·ft/N·m)
0.6 ± 0.1 (1.6 ± 0.3/5.9 ± 1.0)	

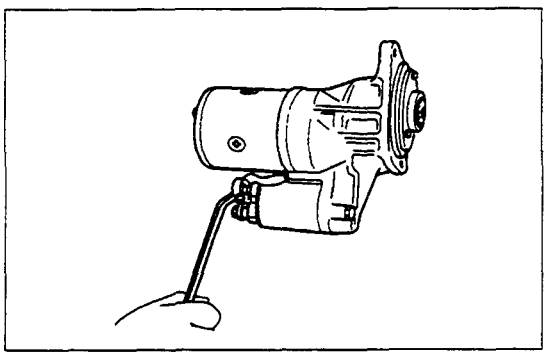

25. Lead Wire

Connect the lead wire in the magnetic switch and tighten the terminal nut to the specified torque.

Lead Wire Terminal Nut Torque	kg·m(lb·ft/N.m)
0.9 ± 0.1 (2.5 ± 0.3/8.8 ± 1.0)	

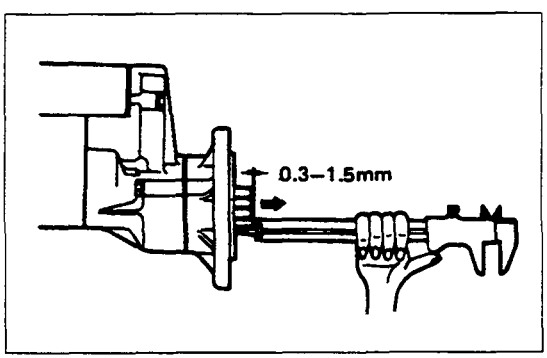

Inspection After Assembly

Use a vernier calliper to measure the pinion shaft thrust play.

The pinion shaft thrust play is equal to the pinion shaft end and pinion stopper clearance.

Pinion Shaft Thrust Play	mm(in)
0.3 – 1.5 (0.01 – 0.06)	

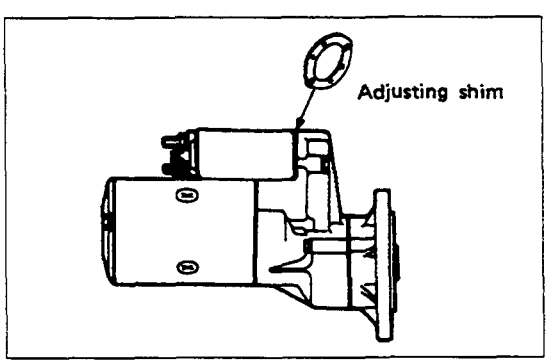

In a case where the pinion gap is outside the specified value;

Make an adjustment using a shim(s).

Adjusting shims are available in 0.5 mm and 0.8 mm (0.02 and 0.03 in.) sizes.

PRE-HEATING SYSTEM

INSPECTION AND REPAIR

Make the necessary adjustments, repairs and part replacement if excessive wear or damage is discovered during inspection.

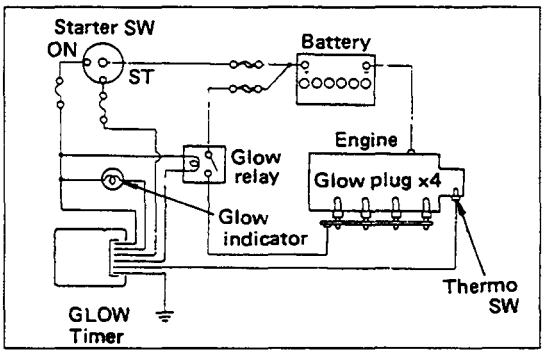

SYSTEM CIRCUIT

Visual Check

Check the main fuses and the glow indicator for damage.

Replace the part(s) if required.

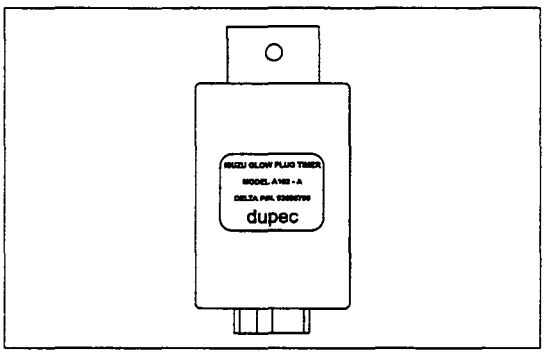

GLOW TIMER

The glow timer is initially activated by the starter switch.

Thereafter, signals from the thermoswitch reach the glow timer to control the glow plug relay operation time.

The thermoswitch and timer unit also act to protect the battery in the event the starter key is engaged for an excessively long time.

Terminal No.	Circuit Routing
1	Starter switch "ON"
2	Thermoswitch
3	Thermoswitch
4	Starter switch "ST"
5	Glow relay
6	Ground
7	Glow indicator

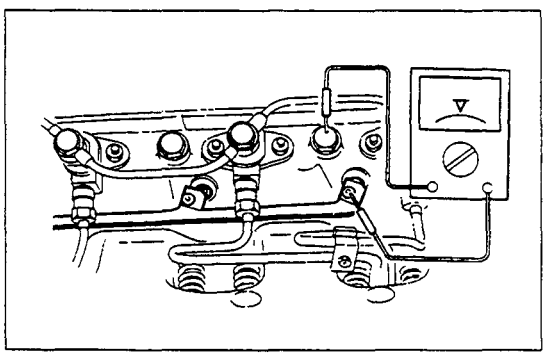

Glow Timer Operation

1. Disconnect the lead wires at the thermoswitch.
2. Connect a voltmeter between the glow plug and ground.
3. Turn the starter switch from "OFF to "ON".

   The engine must be stopped.

4. Note the time the glow indicator remains on.

   If the glow indicator remains on for approximately 15 seconds (conventional pre-heating model) or 3.5 seconds (Quick pre-heating model), the glow timer "ON" time is normal.

   If the glow indicator does not remain on for approximately 15 seconds or 3.5 seconds, trouble in the glow timer or, the glow relay, is indicated.

5. Return the starter switch to "OFF".

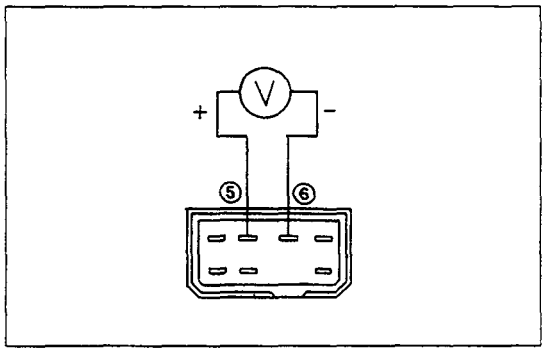

Glow Timer Output

1. Disconnect the lead wire at the starter switch.
2. Connect the positive lead of the voltmeter to glow timer terminal No.⑤.
3. Connect the negative lead of the voltmeter to glow timer terminal No.⑥.

   Do not disturb the other connections.

4. Turn the starter switch from "OFF" to "ON".
5. Note the voltmeter reading.

   If the voltmeter reading remains at zero for approximately 18 seconds before rising, the glow timer "DELAY" time is normal.

6. Return the starter switch to "OFF".

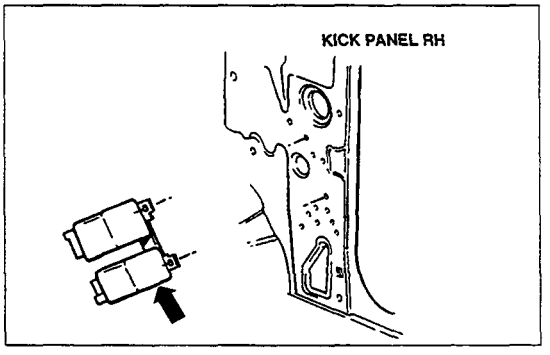

GLOW RELAY

The glow relay is located on the RH side kick panel in the inside of the vehicle.

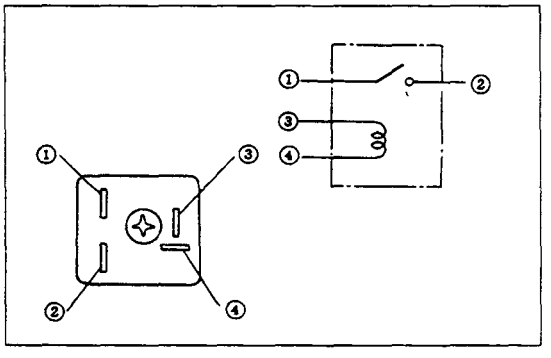

Use an ohmmeter to measure the resistance between terminals No. 3 and No. 4.

If the measured value is outside the specified range, the glow relay must be replaced.

Glow Relay Resistance	Ohms
10 – 15	

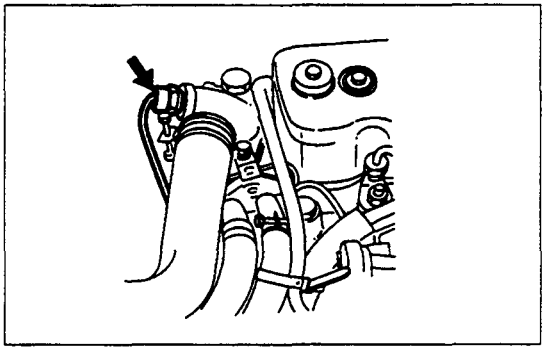

THERMO SWITCH

The thermo switch is located on the water outlet pipe.

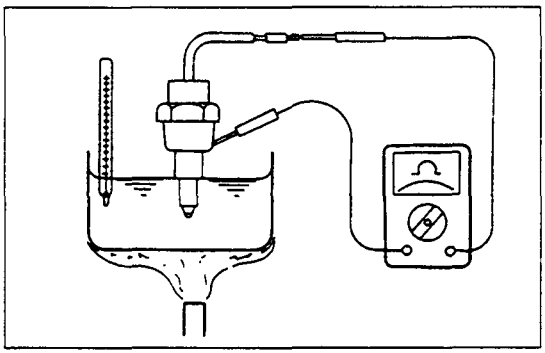

Use a circuit tester to check the thermo switch for continuity.

OFF	→	ON : 7 – 13°C (45 – 55°F)
ON	→	OFF : Below 3°C (37°F)

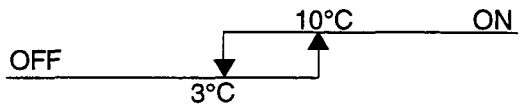

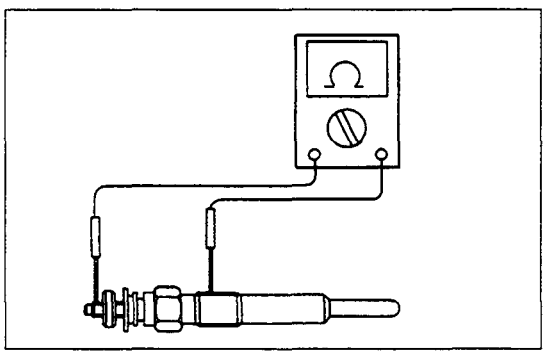

GLOW PLUG

Use a circuit tester to test the glow plugs for continuity.

Glow Plug Resistance (Reference)	Ohms
Conventional model	Approximately 1.5
Quick on start model	Approximately 0.9

TROUBLESHOOTING (For Pre heating system)

Refer to this Section to quickly diagnose and repair preheating system problems.

Each troubleshooting chart has three headings arranged from left to right.

(1) Checkpoint (2) Trouble Cause (3) Countermeasure

This Section is divided into two Sub-Sections.

I. COOLANT TEMPERATURE 0°C (32°F) OR LESS

1. Glow Relay Does Not Close
2. Glow Relay Closes But Preheating System Does Not Operate
3. Glow Relay Remains Closed
4. Glow Indicator Does Not Light

II. COOLANT TEMPERATURE 0°C (32°F) OR MORE

5. Glow Indicator Does Not Light
6. Glow Relay Remains Closed

I. COOLANT TEMPERATURE 0°C (32°F) OR LESS

1. Glow Relay Does Not Close

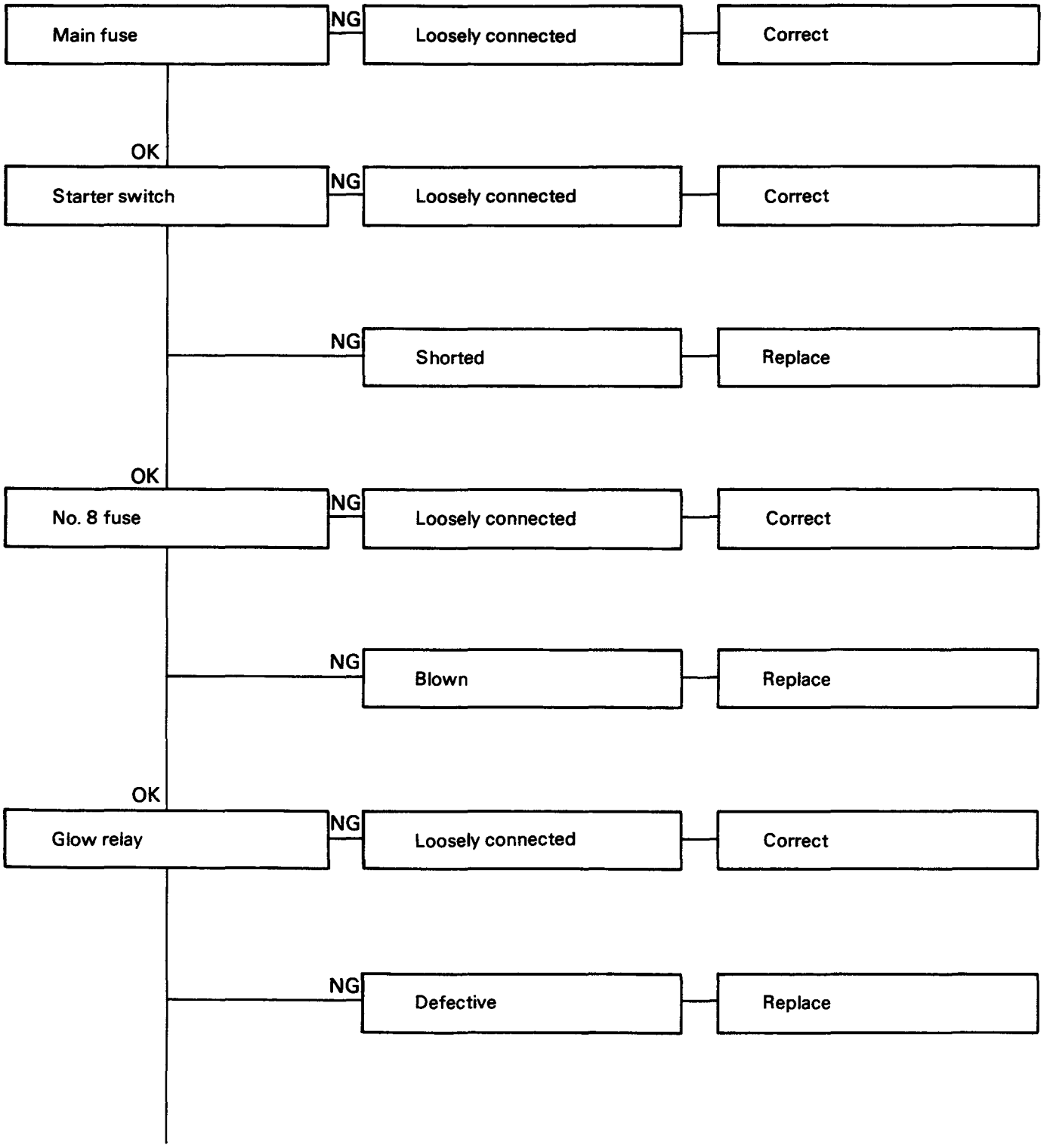

Continued on the following page

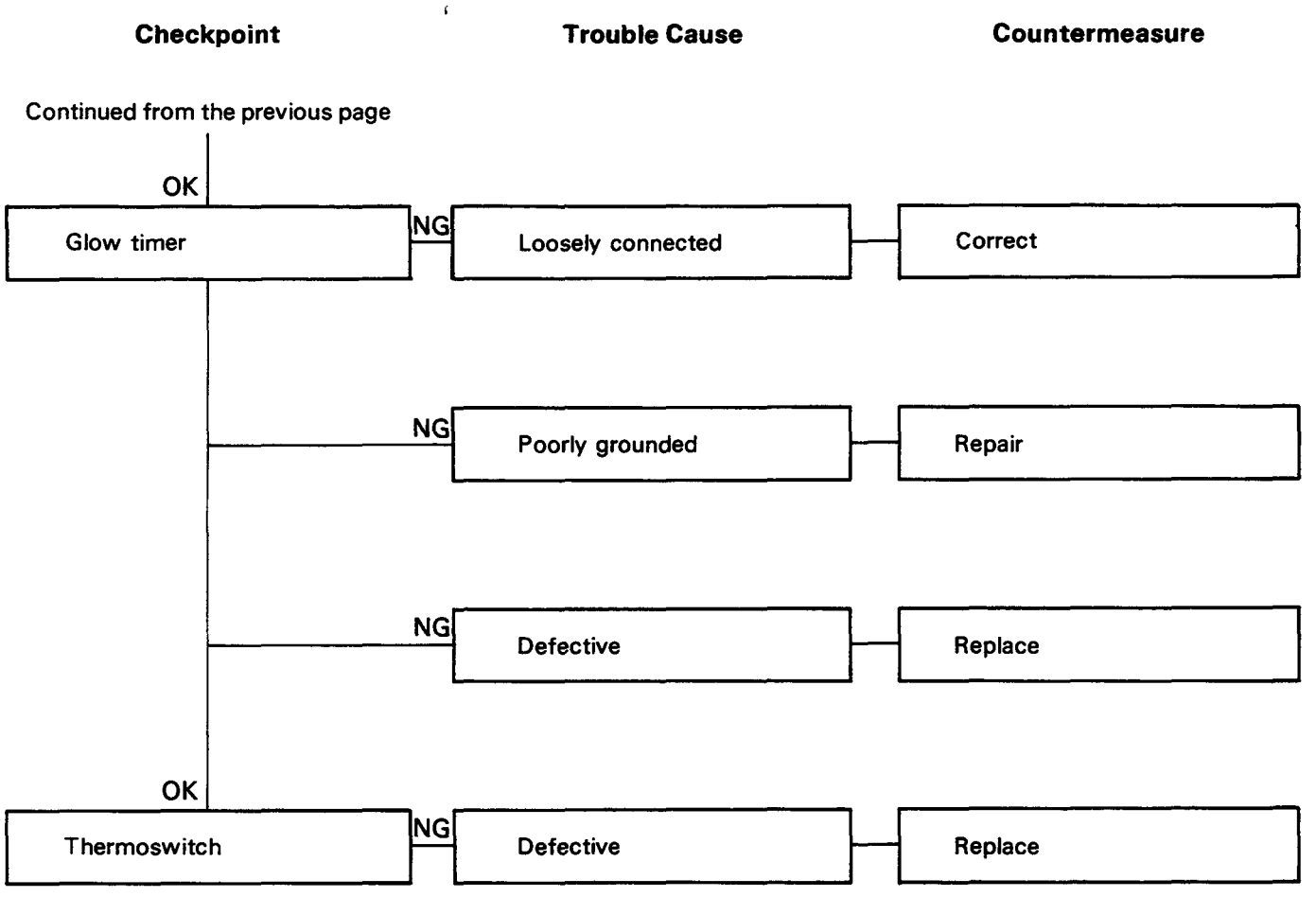

2. Glow Relay Closes But Preheating System Does Not Operate

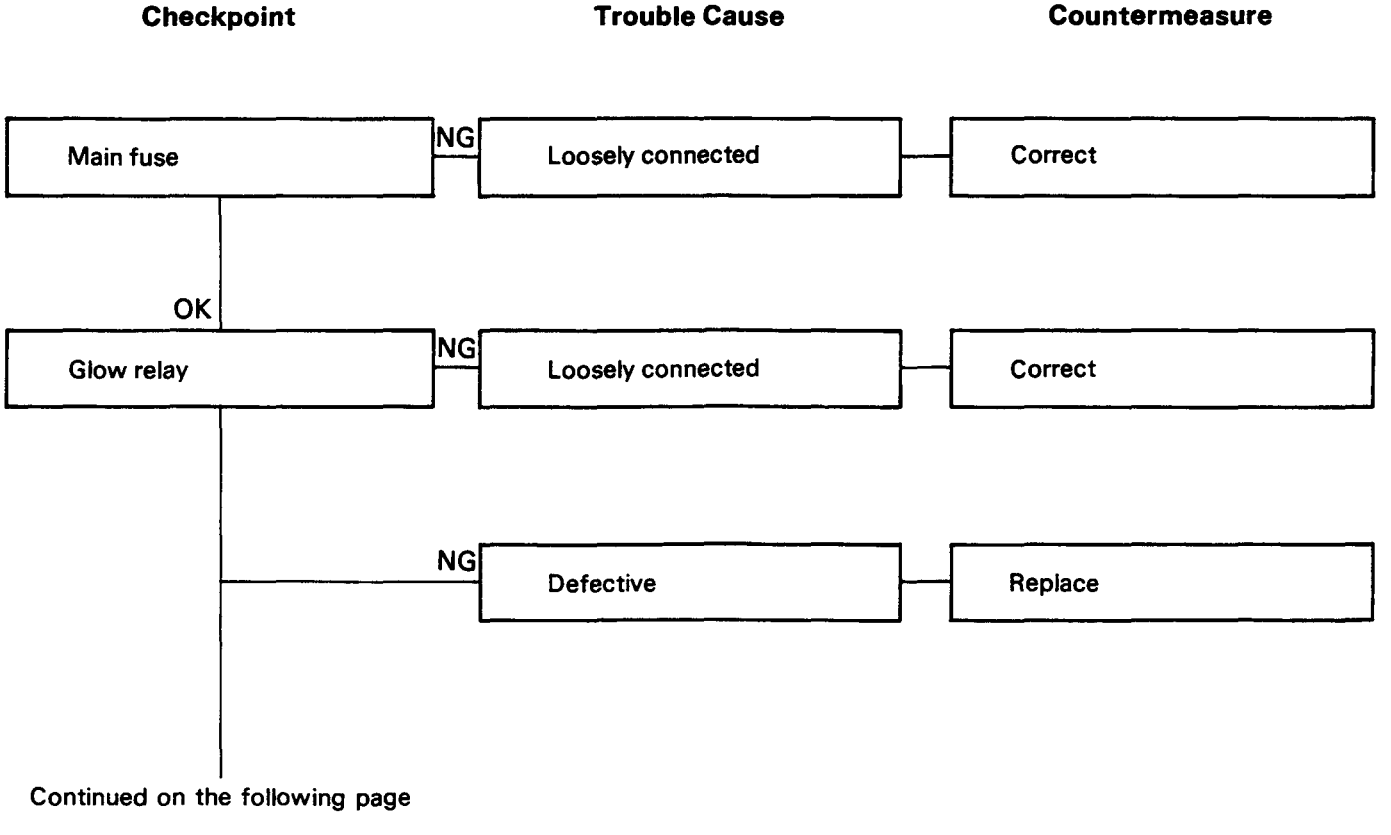

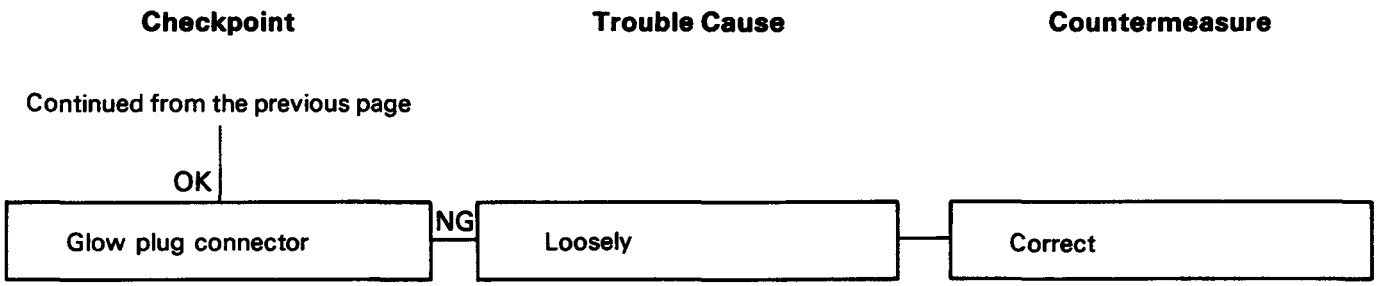

3. Glow Relay Remains Closed

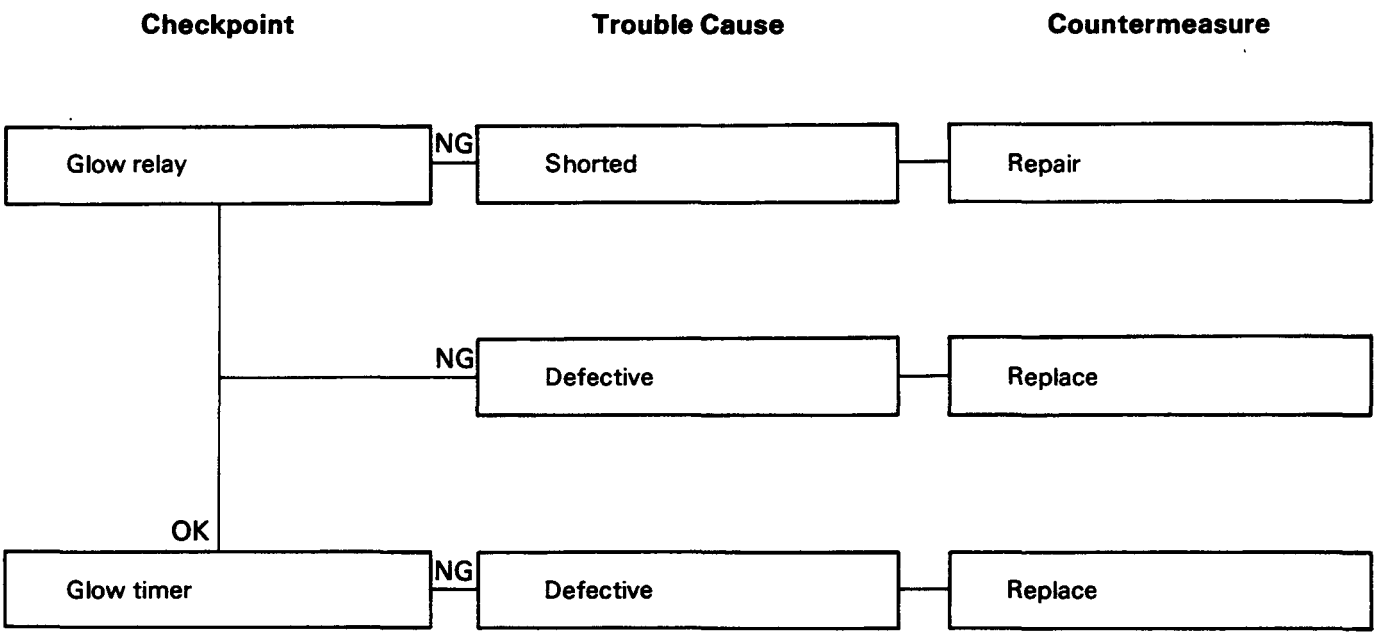

4. Glow Indicator Does Not Light

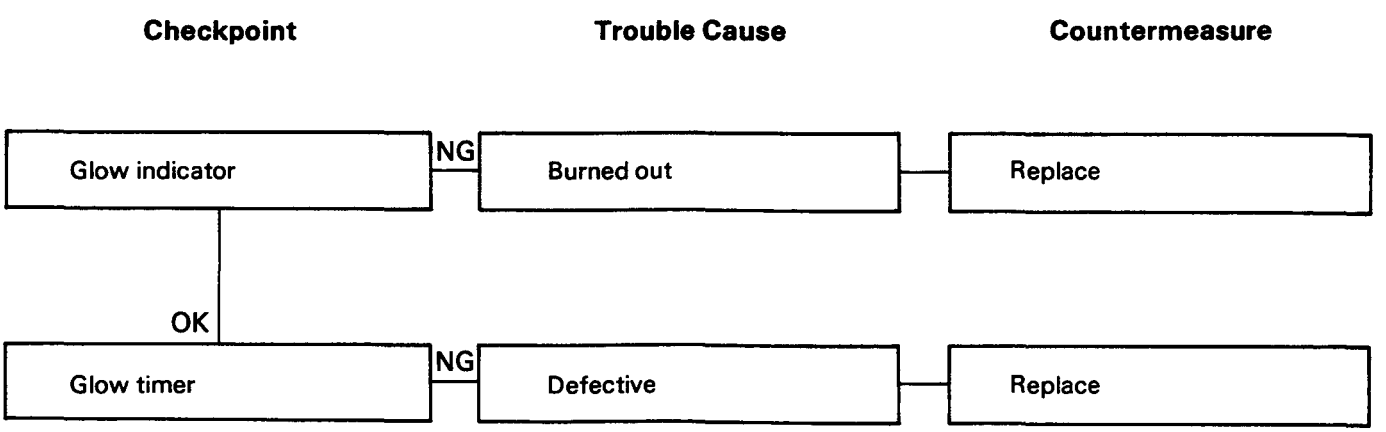

II. COOLANT TEMPERATURE 0°C (32°F) OR MORE

1. Glow Indicator Does Not Light

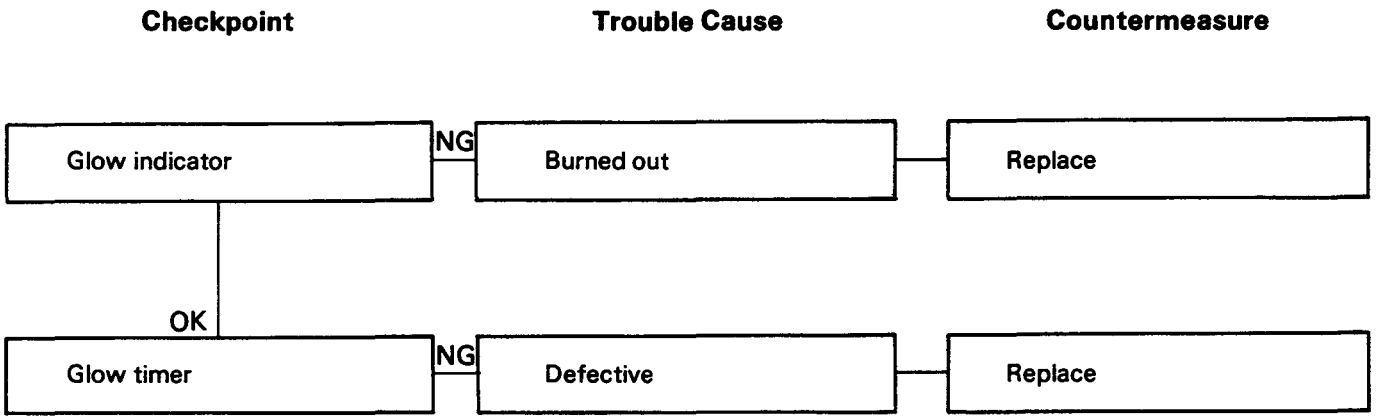

2. Glow Relay Remains Closed

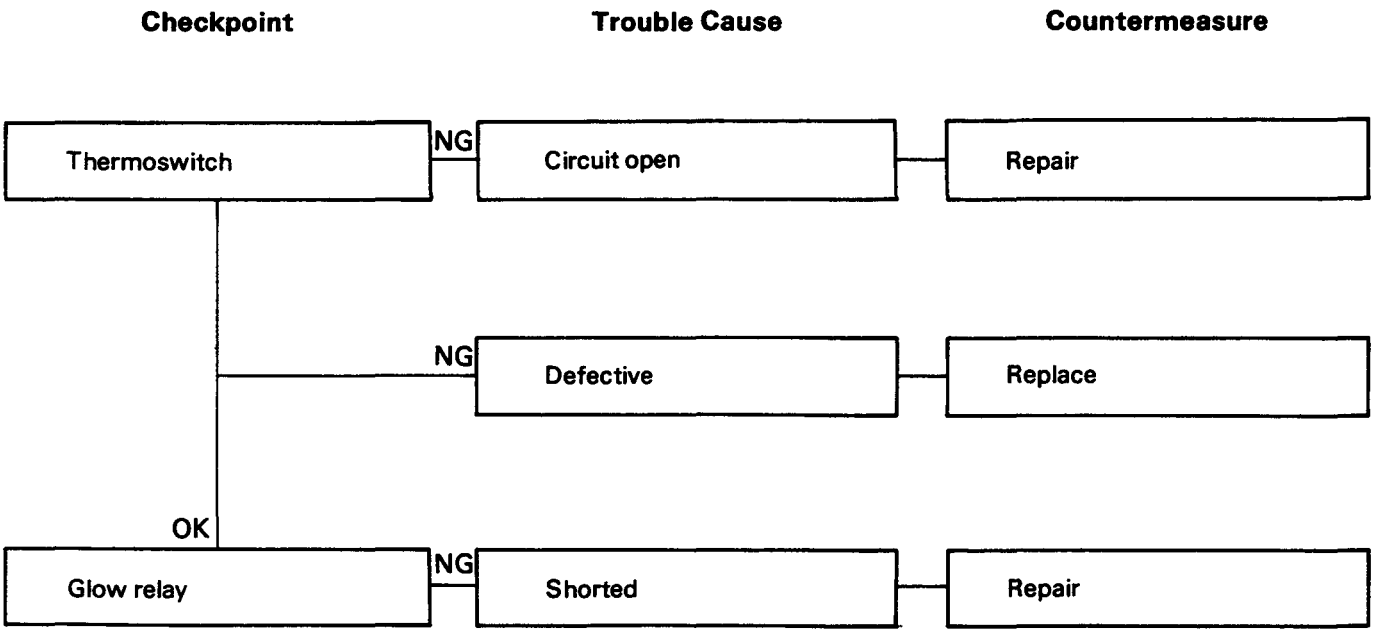

TROUBLESHOOTING (For Charging and Starting system)

Refer to this Section to quickly diagnose and repair electrical problems.

Each troubleshooting chart has three headings arranged from left to right.

(1) Checkpoint (2) Trouble Cause (3) Countermeasure

This Section is divided into two Sub-Sections:

I. Battery Charging and Noise Problems
   1. No Charging
   2. Overcharging
   3. Undercharging
   4. Unstable Charging Current
   5. Noise

II. Hard Starting
   1. Pinion Does Not Engage The Ring Gear When The Starter Switch Is Turned On
   2. Pinion Engages The Ring Gear But The Engine Does Not Turn Over
   3. Incorrect Pinion And Ring Gear Engagement
   4. Starter Continues To Run After The Starter Switch Is Turned Off
   5. Excessive Commutator Sparking

I. BATTERY CHARGING AND NOISE PROBLEMS

1. NO CHARGING

Checkpoint		Trouble Cause	Countermeasure
Terminals and connectors	NG	Broken or defective	Repair the push rod play
OK			
Ground connections	NG	Poorly grounded	Correct
OK			
Brush with slip ring	NG	Poor contact	Repair or replace
OK			
Alternator stator coil	NG	Open or scorched	Replace
OK			
Alternator rotor coil	NG	Open or scorched	Replace
OK			
Alternator diode	NG	Defective	Replace
OK			
IC regulator	NG	Defective	Replace

2. OVERCHARGING

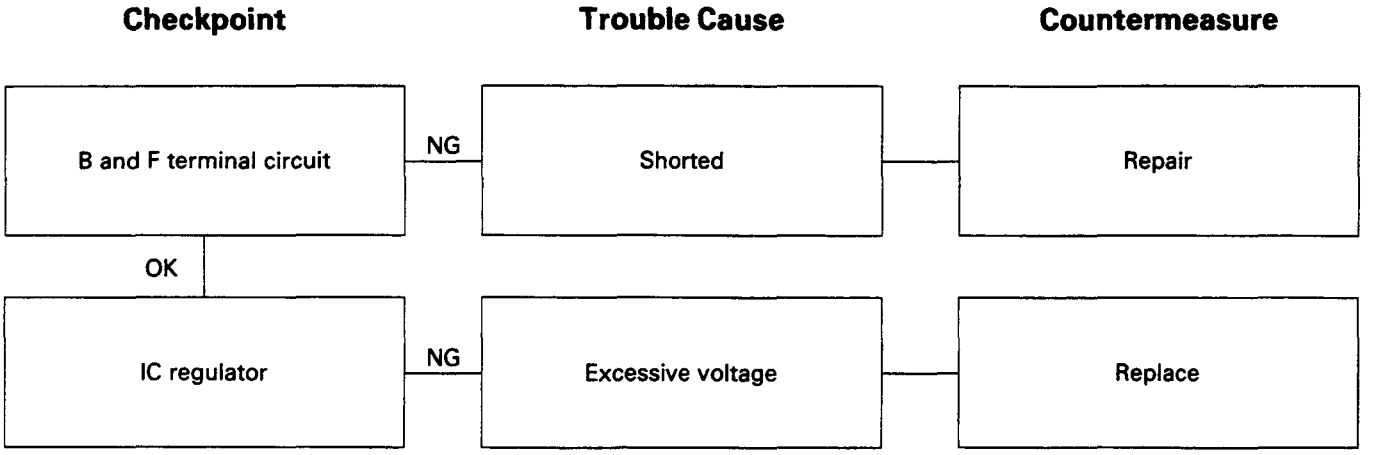

3. UNDERCHARGING

Checkpoint		Trouble Cause	Countermeasure
Battery terminals	NG	Loosely connected	Retighten
OK			
Drive belt	NG	Slippage	Adjust or replace
OK			
Brush and slip ring contact	NG	Intermittent	Replace or repair the brush holder assembly
OK			
Alternator rotor coil	NG	Short circuit	Repair or replace
OK			
Alternator stator coil	NG	Short or open circuit	Repair or replace
OK			
Alternator diode	NG	Defective	Replace
OK			
IC regulator	NG	Insufficient voltage	Replace
OK			
Electrical load	NG	Excessive	Use a higher capacity alternator or reduce the accessory load

4. UNSTABLE CHARGING CURRENT

Checkpoint		Trouble Cause	Countermeasure
Terminals and connectors	NG	Broken or defective	Repair the push rod play
OK			
Drive belt	NG	Loose	Tighten (Readjust)
OK			
Brush with slip ring	NG	Poor contact	Repair or replace
OK			
Alternator rotor coil	NG	Open or short circuit	Repair or replace
OK			
Alternator stator coil	NG	Open or short circuit	Repair or replace
OK			
Stator coil and diode connections	NG	Loose	Repair
OK			
IC regulator	NG	Defective	Replace

5. NOISE

Checkpoint		Trouble Cause	Countermeasure
Part mounting fasteners	NG	Loose	Tighten
OK			
Drive belt	NG	Defective	Replace
OK			
Bearing	NG	Defective	Replace
OK			
Diode	NG	Defective	Replace
OK			
Stator coil	NG	Short circuited	Repair or replace

II. HARD STARTING

1. PINION DOES NOT ENGAGE THE RING GEAR WHEN THE STARTER SWITCH IS TURNED ON

Checkpoint		Trouble Cause	Countermeasure
Battery	NG	Discharged	Recharge
OK			
Starter circuit	NG	Open or intermittent	Clean and reconnect
OK			
Magnetic solenoid switch	NG	Contact points defective	Replace
OK			
Magnetic solenoid coil	NG	Open or scorched	Replace
OK			
Plunger shaft	NG	Bent or scorched	Bent or scorched

2. PINION ENGAGES THE RING GEAR BUT THE ENGINE DOES NOT TURN OVER

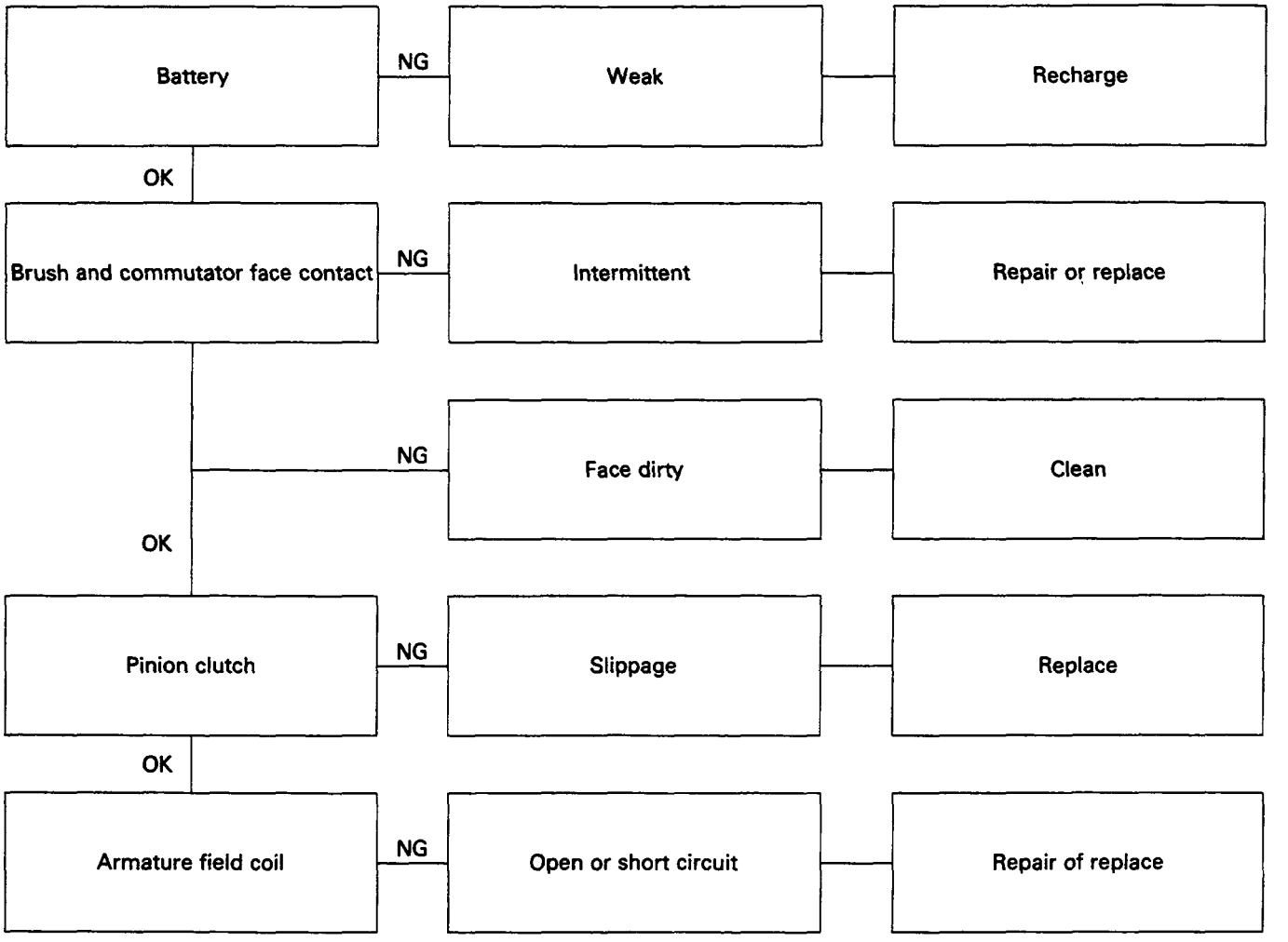

3. INCORRECT PINION AND RING GEAR ENGAGEMENT

Checkpoint		Trouble Cause	Countermeasure
Battery	NG	Discharged	Recharge
OK			
Pinion and ring gear teeth	NG	Worn or broken	Replace
OK			
Pinion gear return movement	NG	Incorrect	Adjust

4. STARTER CONTINUES TO RUN AFTER THE STARTER SWITCH IS TURNED OFF

Checkpoint		Trouble Cause	Countermeasure
Magnetic solenoid switch contact points	NG	Seized	Repair or replace
OK			
Starter switch	NG	Defective	Replace

5. EXCESSIVE COMMUTATOR SPARKING

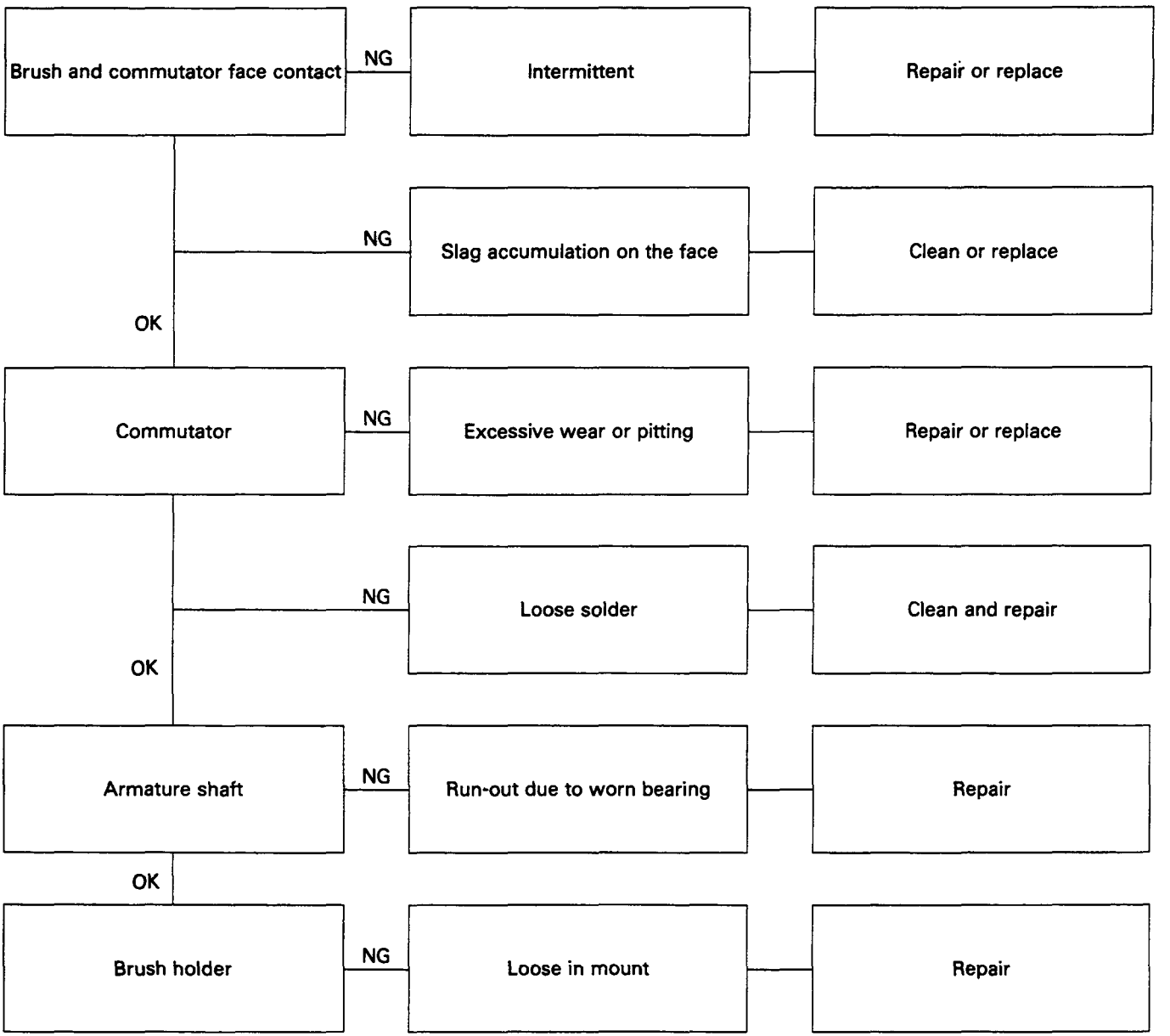

QOS II PREHEATING SYSTEM

GENERAL DESCRIPTION

QOS II preheating system features a quick-on glow plug with thermometer control of the glowing time and the afterglow time function.

The system consists of a controller, indicator lamp, thermoswitch, relay, and glow plug (4 pcs).

With the employment of the thermoswitch, the glow time changes according to the engine coolant temperature, thus allowing optimum starting conditions to be obtained.

SYSTEM DIAGRAM

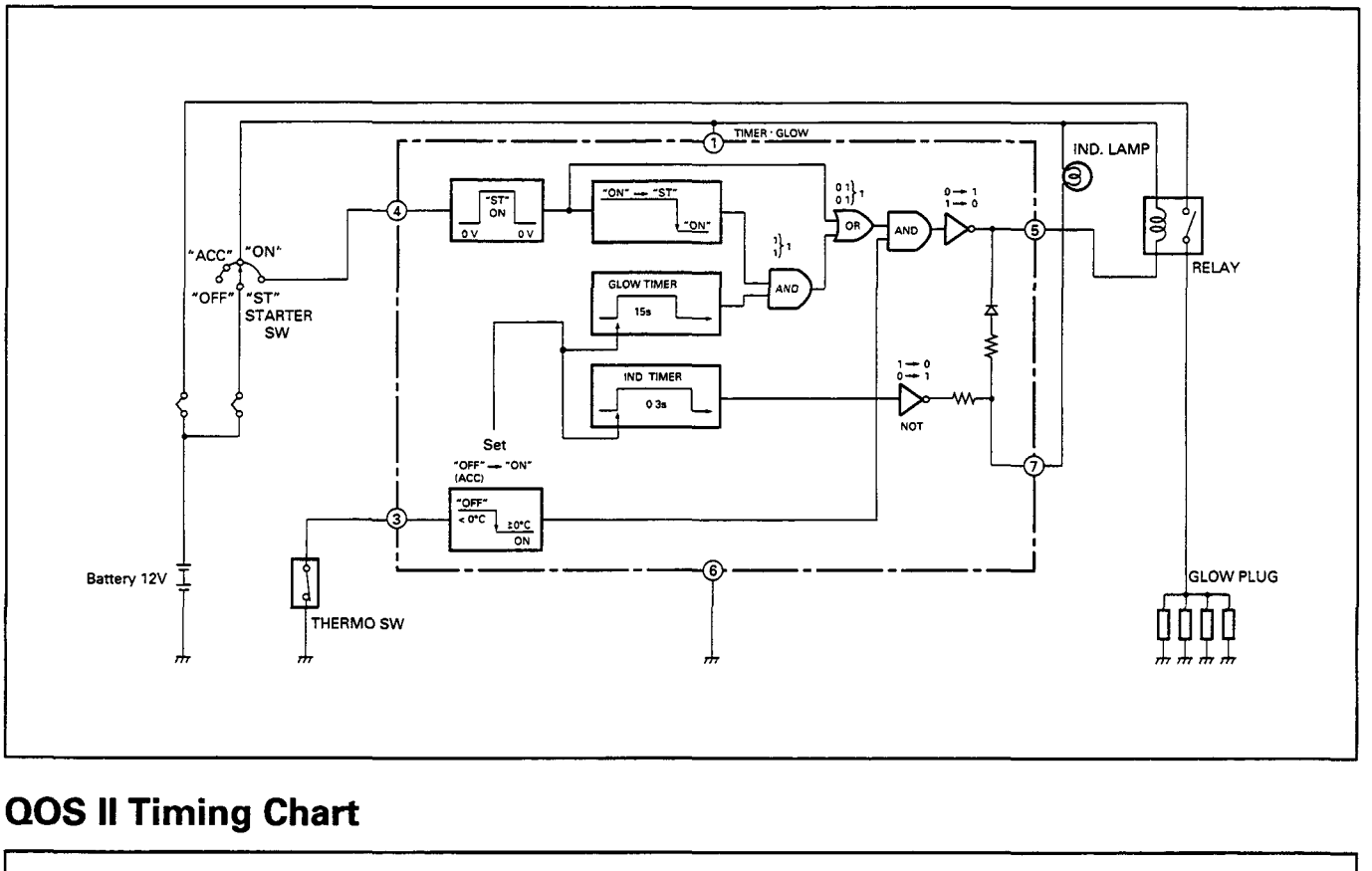

QOS II Timing Chart

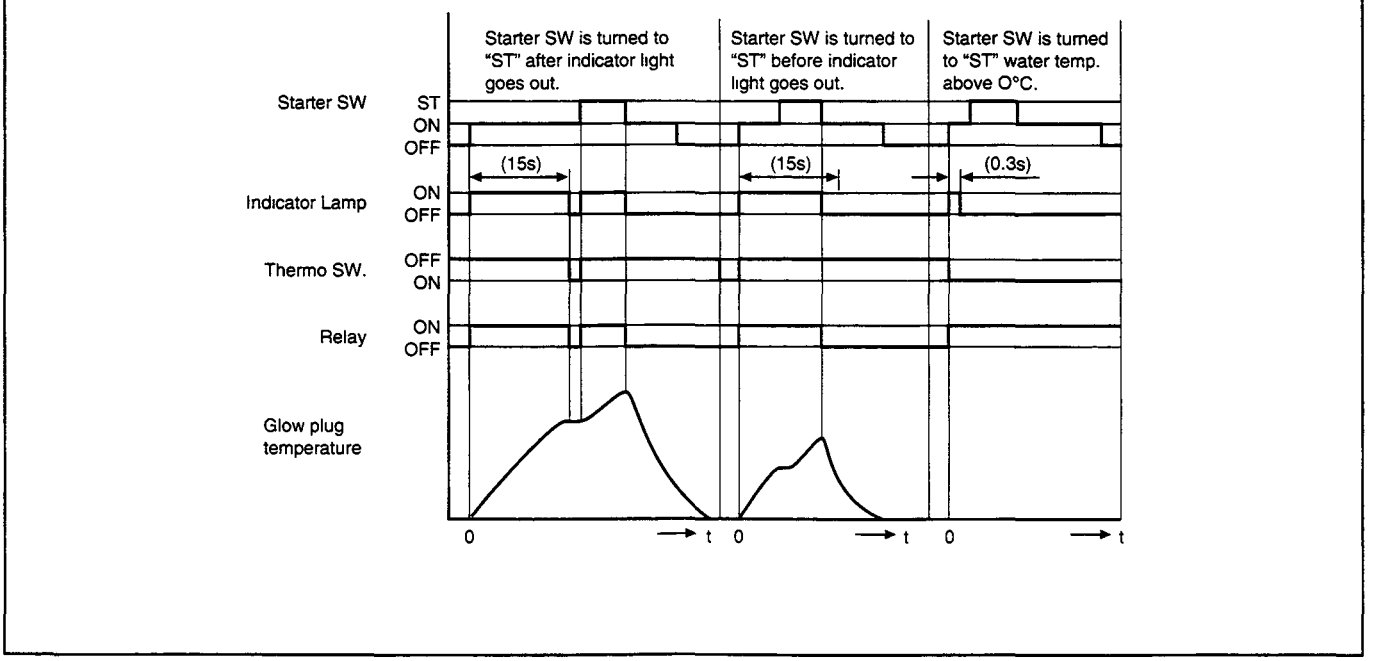

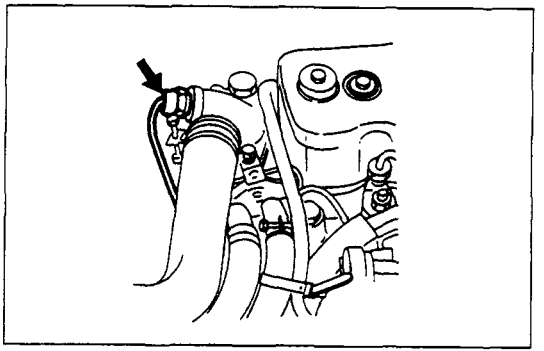

Inspection on QOS II System Operation

THERMO SWITCH

The thermo switch is located on the water outlet pipe.

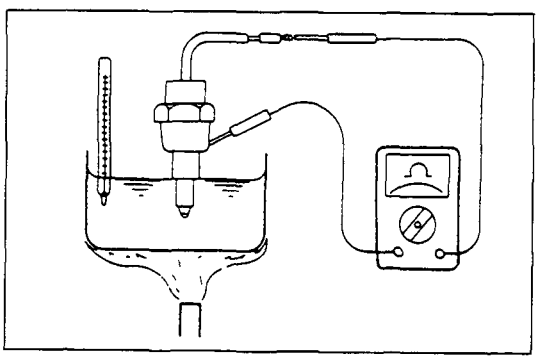

Use a circuit tester to check the thermo switch for continuity.

OFF → ON : 7 – 13°C (44.6 – 55.4°F)
ON → OFF : Below 3°C (37.4°F)

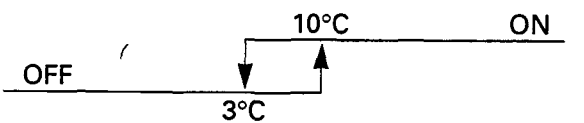

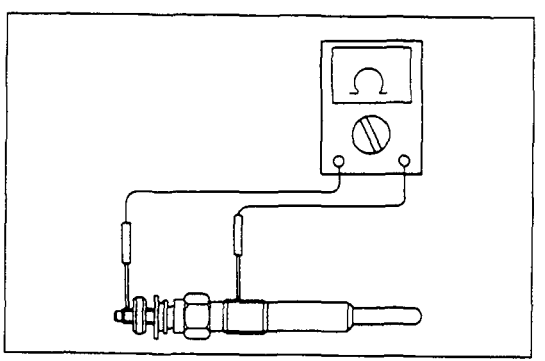

GLOW PLUG

Use a circuit tester to test the glow plugs for continuity.

Glow Plug Resistance (Reference	Ohms
Conventional model	Approximately 1.5
Quick on start model	Approximately 0.9

QOS II SYSTEM TROUBLESHOOTING

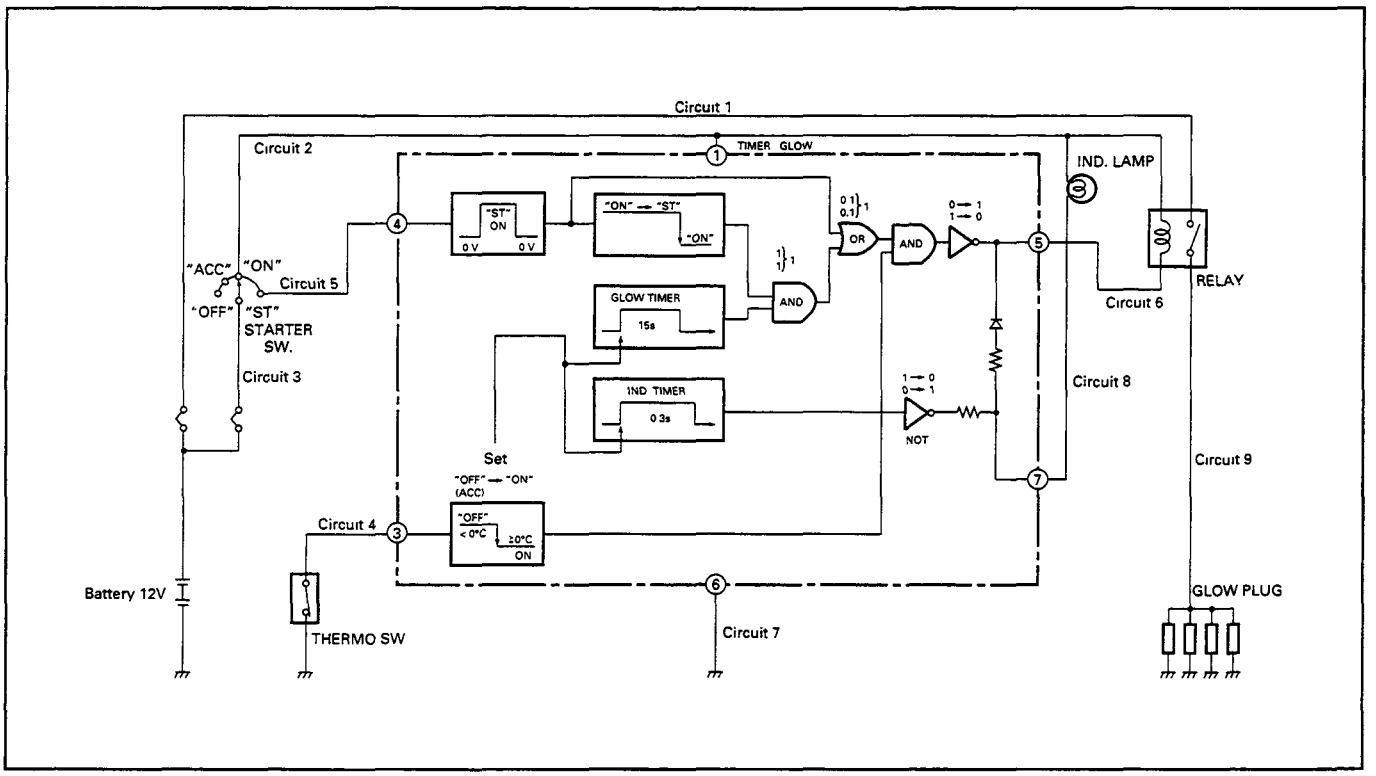

1) Problems when the water temperature of the engine is 0°C or below.

Condition	Cause	Circuit
Glow plug relay will not be lit.	Bad connection of FLW between battery and starter.	3
	Bad connection or disconnection of starter SW circuit.	
	Bad connection or disconnection of Fuse No. 8. Malfunction of other circuits occurred simultaneously.	2
	Bad starter switch.	
	Bad connection of glow plug relay terminal.	1
	Disconnection of glow plug relay excitation coil.	
	Disconnection of circuit between glow plug relay and timer.	6
	Bad glow relay. (The main contact does not pass electricity.)	
	Bad connection of timer.	
	Bad timer.	
	Bad earth circuit of timer.	7
	Bad thermoswitch. (It remains ON even in water temperature below 0°C).	
	Earth short-circuiting of thermo SW.	7

Condition	Cause	Circuit
Through glow plug relay turns ON, preheating is not done.	Bad connection of FLW between battery and glow relay.	1
	Bad connection or disconnection in preheating circuit of glow relay main contact terminal connector.	
	Bad connection between plug connector and preheating circuit.	9
Glow plug relay turns ON, but does not go OFF.	Bad timer.	
	Bad timer. Short circuiting in circuit or earth between 5 terminal and glow relay.	6
	Bad glow relay.	
Indication lamp is not lit.	Bad timer.	
	Burning-out of light bulb.	8

Note: Circuit No. in rectangle is shown in the previous pre-heating chart.

2) Problems when the time water temperature of the engine is 0°C or above.

Condition	Cause	Circuit
Indicator lamp is not lit.	Bad timer.	
	Burning-out of bulb.	8
Turn glow relay ON.	Bad thermoswitch or disconnection of thermo SW circuit. (Indicator will light up for 3.5 seconds.)	4
	Bad timer.	
	Bad timer. Short-circuiting in circuit or earth between terminal 5 and glow relay.	

Note: Circuit No. in rectangle is shown in the previous pre-heating chart.

3) Burning-out of glow plug
When only one line is burned out, it has no effect on the start up of the engine. Even if one line is burned out, judging from the characteristics of the glow plug, the impressed voltage will change only slightly. Therefore, no judgement can be made by normal testing while the glow plug is installed. In order to check for disconnections and burn-outs, the glow plugs will have to be removed from the connectors and checked one by one for continuity.

DELTA OPEL ISUZU SUZUKI

Hi - Tech

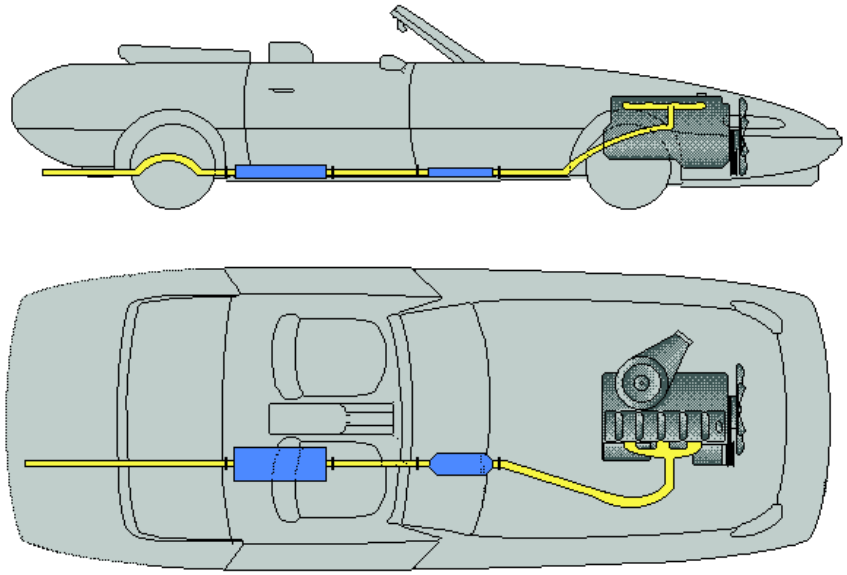

Index

Specs.

Removal

Inspection

KB TF 140 Diesel
Engine Exhaust

ISUZU

SECTION 6F

EXHAUST SYSTEM

TABLE OF CONTENTS

PAGE

Main Data and Specifications 6F– 2
General Description 6F– 3
Removal and Installation 6F– 4
Inspection and Repair 6F– 6
Turbocharger 6F– 7
  Main Data and Specifications 6F– 7
General Description 6F– 8
Inspection and Repair 6F–10
IHI Service Network 6F–12

MAIN DATA AND SPECIFICATIONS

Exhaust system		
Pipe outside diameter × thickness		
Front pipe	mm(in)	50.8 × 1.6 (2.0 × 0.063)
Middle pipe	mm(in)	50.8 × 1.6 (2.0 × 0.063)
Rear pipe	mm(in)	50.8 × 1.6 (2.0 × 0.063)
Silencer		
Type		Circular section-shell construction of triple skin and end plates, internal construction of baffles and perforated tubes.
Inside diameter	mm(in)	Approximately 180 (7.1)
Length	mm(in)	Approximately 525 (20.7)
Mounting		
Number of suspension points		5
Type		Rubber and metal

GENERAL DESCRIPTION

FOR 4 x 2

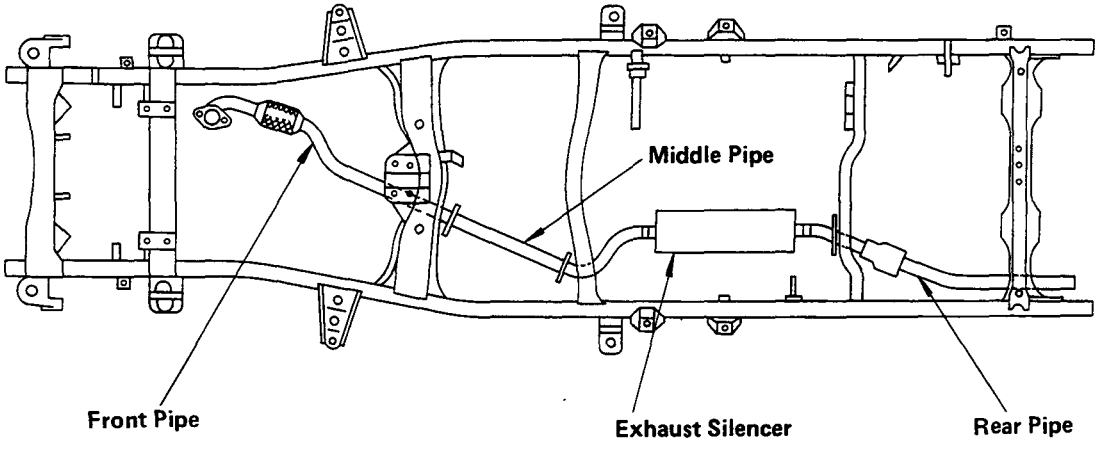

FOR 4 x 4

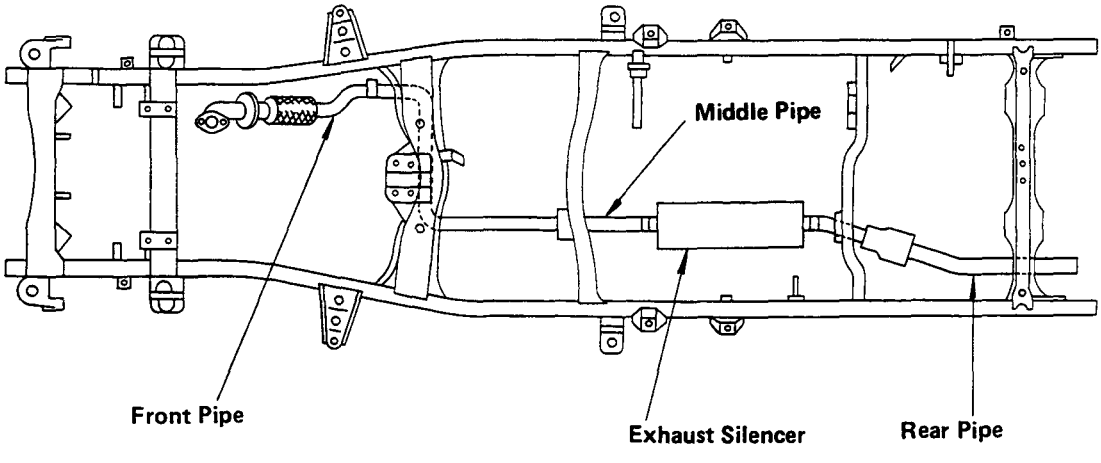

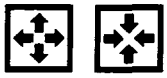

REMOVAL AND INSTALLATION

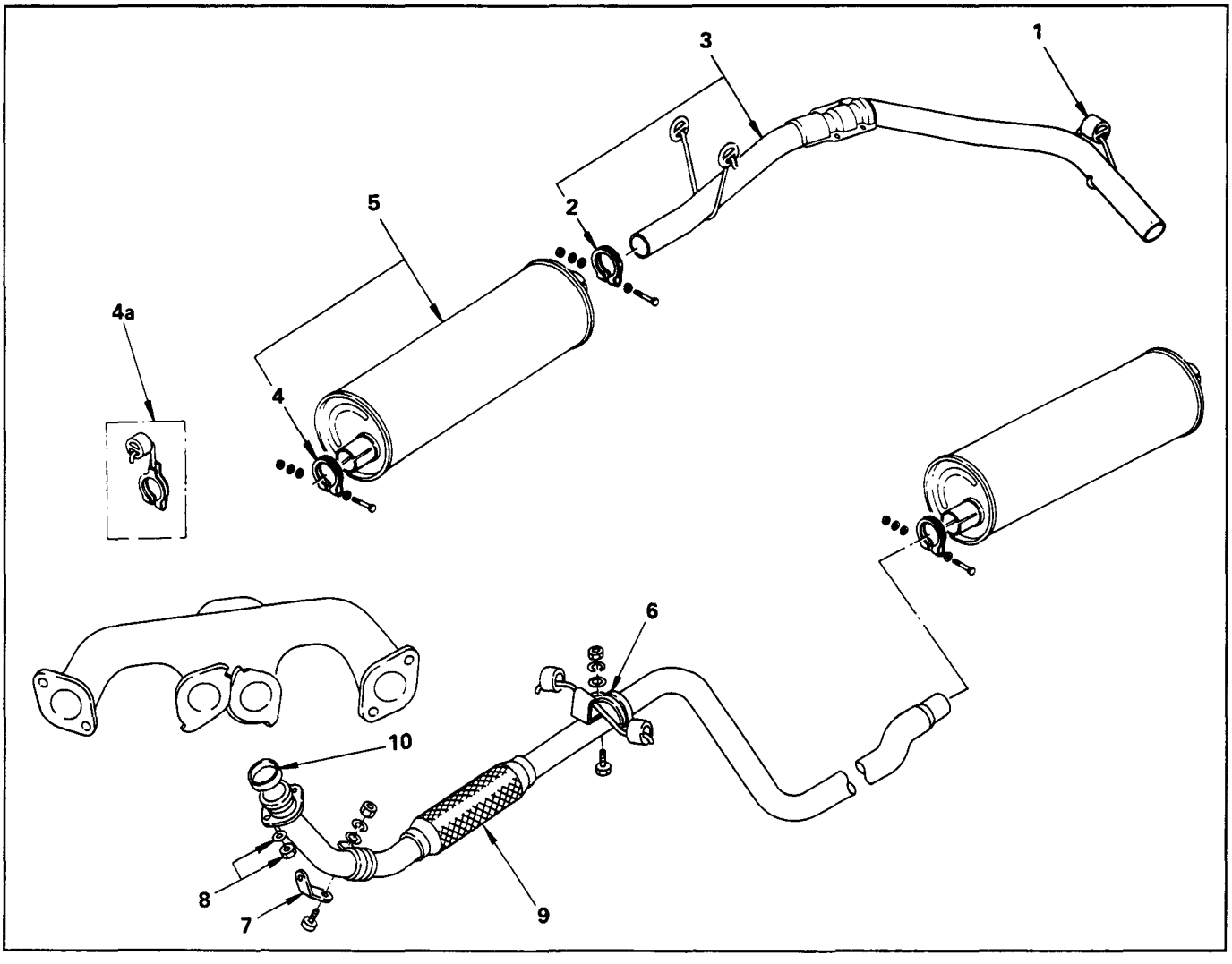

Removal Steps

1. Rear hanger clamp
2. Silencer rear clamp
3. Rear exhaust pipe
4. Silencer front clamp
4a. Silencer front clamp (For long wheel base)
5. Exhaust silencer
6. Front hanger clamp
7. Exhaust front bracket
8. Exhaust pipe nut and washer
9. Front exhaust pipe
10. Exhaust pipe gasket

Installation Steps

10. Exhaust pipe gasket
9. Front exhaust pipe
▲ 8. Exhaust pipe nut and washer
7. Exhaust front bracket
6. Front hanger clamp
▲ 5. Exhaust silencer
4. Silencer front clamp
4a. Silencer front clamp (For long wheel base)
3. Rear exhaust pipe
2. Silencer rear clamp
1. Rear hanger clamp

Important Operations – Installation

Follow the removal procedure in the reverse order to perform the installation procedure. Pay careful attention to the important points during the installation procedure.

8. Exhaust Pipe Nut and Washer

Connect the exhaust pipe to the exhaust manifold.

Torque	kg·m(lb.ft/N·m)
6.8 ± 0.5 (49 ± 3.6/67 ± 5)	

5. Exhaust Silencer

Apply muffler sealer to the joining portion of the pipes.

INSPECTION AND REPAIR

Make the necessary adjustments, repairs, and part replacements if excessive wear or damage is discovered during inspection.

Front Exhaust Pipe

Rear Exhaust Pipe

Exhaust Silencer

Check the pipes for corrosion, cracking, damage or misalignment and repair as required.
Check the rubber rings for deterioration or damage and repair as required.

TURBOCHARGER

MAIN DATA AND SPECIFICATIONS

Model		IHI RHF4H
Turbine type		Radial-inflow
Compressor type		Radial-outflow
Maximum permissible speed	rpm	172,000
Wastegate opening pressure	mmHg	757 ± 30
Weight	kg(lb)	4.2 (9.3)

IHI : Ishikawajima-Harima Heavy Industries., Ltd.

GENERAL DESCRIPTION

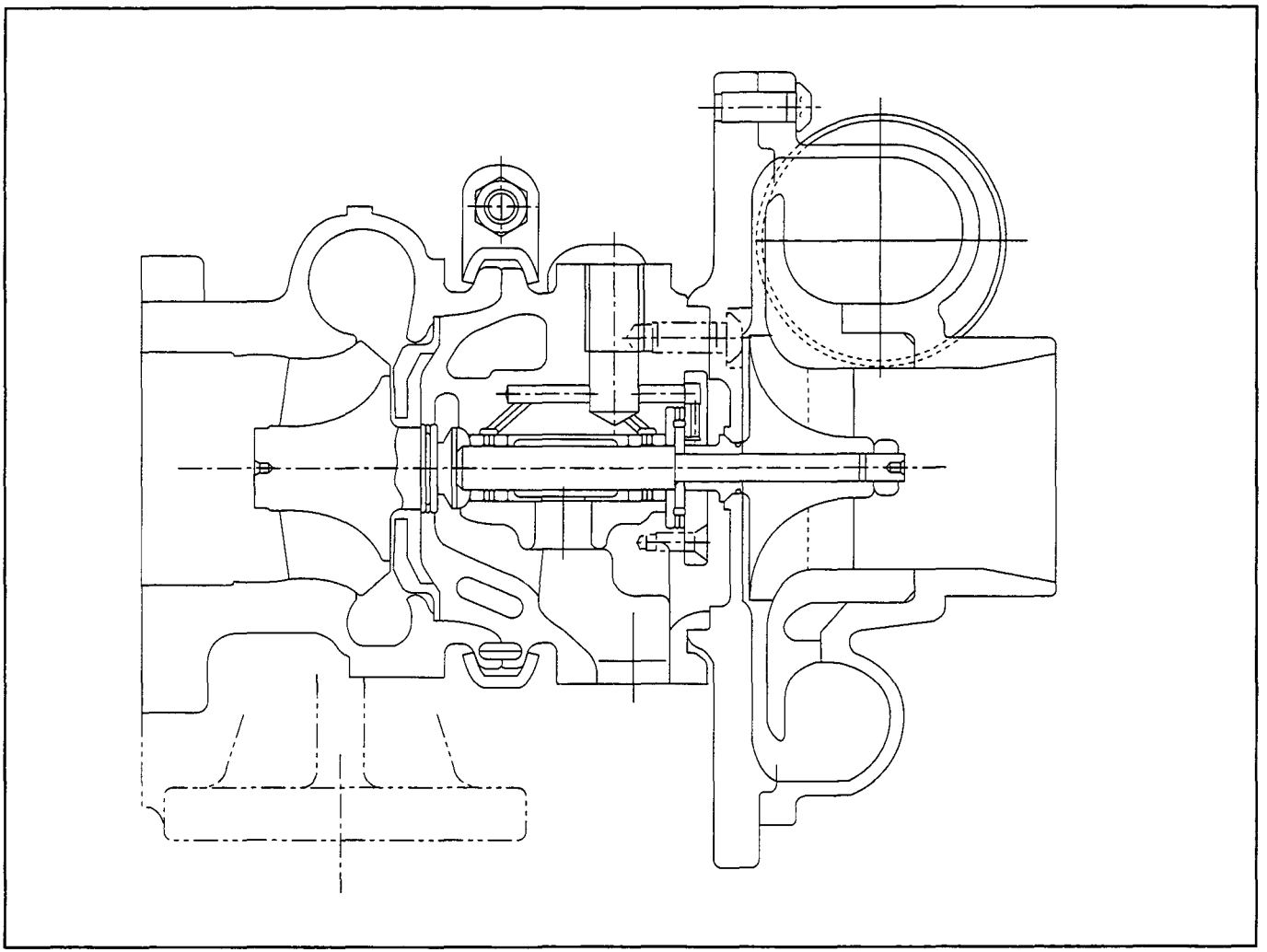

036LV002

The turbocharger internal mechanism consists of the turbine wheel, the compressor wheel, and the radial brarings. These parts are supported by the bearing housing.

The turbocharger external mechanism consists of the compressor housing air intake port and the turbine housing air exhaust port.

The turbocharger increases air intake efficiency. This results in increased engine power, reduced fuel consumption, and minimal engine noise.

The turbocharger operates at very high speeds and temperatures. Part materials have been carefully selected and machined to extremely high precision.

Turbocharger servicing requires great care and expertise.

If reduced performance is noted, check the engine for damage or wear. If there is no apparent engine damage or wear, trouble with the turbocharger is indicated.

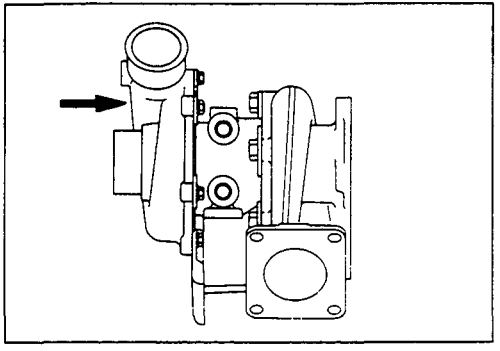

IDENTIFICATION OF UNIT

The turbocharger nameplate gives the date of manufacture and other important information required to identify the unit when service inquiries are made.

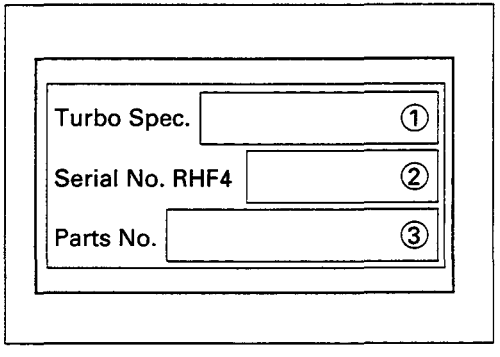

The turbocharger nameplate has the following information stamped on it.

① Turbo Specification Number, Production Year and Month

② Production Date, Daily Serial Number

③ ISUZU Parts Number

INSPECTION AND REPAIR

Make the necessary adjustments, repairs, and part replacements if excessive wear or damage is discovered during inspection.

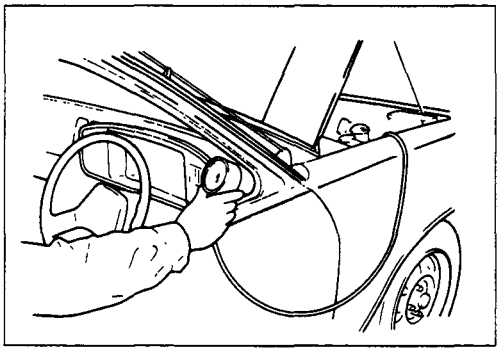

Turbocharger pressure check

(1) Remove the connecting hose from intake pipe.
(2) Connect the pressure gauge.
(3) Start the engine and gradually increase the engine speed (the vehicle must be stationary with no load applied to the engine).
(4) Check to see that turbocharger pressure rises to approximately 300 mmHg.

Pressure Gauge : 5-8840-0075-0

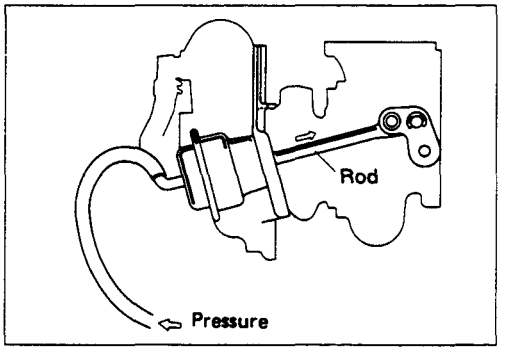

Waste gate operation check

(1) Remove the hose between the waste gate and the intake pipe.
(2) Connect the pressure gauge.
(3) Check to see that the rod begins to move when a pressure of approximately 665 mmHg is applied to the waste gate.

Note:

Do not apply a pressure greater than 1 kg/cm^2 to the wastegate during this check.

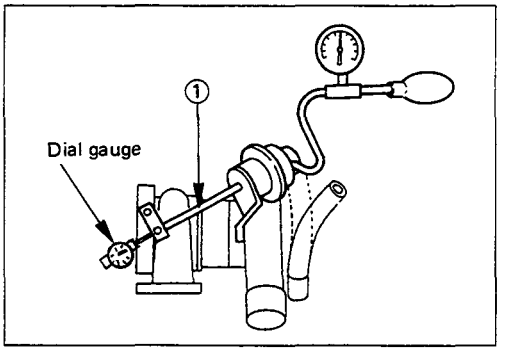

Unit Inspection (Remove Turbo. from engine)

Check to see the pressure required to move the control rod 2 mm is within the limits shown below.

Control Rod Operating Pressure	757 mmHg

Contact the "ISUZU MOTORS LIMITED" Dealer service department or "IHI SERVICE FACILITY" for major repairs and maintenance.

Important wheel shaft end play and bearing clearance standards and limits are included below for your reference.

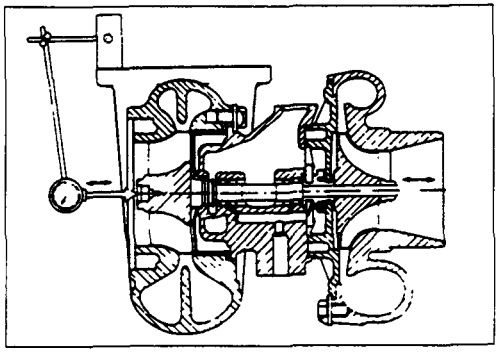

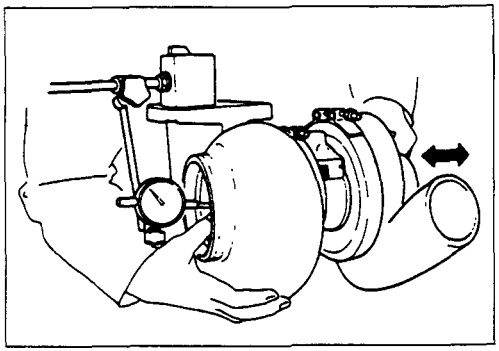

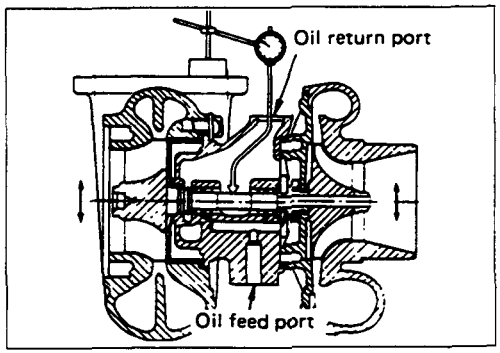

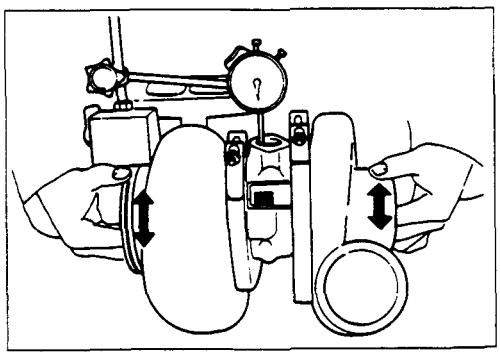

Wheel Shaft End Play

Use a dial indicator to measure the wheel shaft end play.

Apply a force of 1.2 kg (2.6 lb/11.8N) alternately to the compressor wheel end and the turbine wheel end.

Wheel Shaft End Play — mm(in)

Standard	Limit
0.03 — 0.06 (0.001 — 0.002)	0.09 (0.004)

Wheel Sahft and Bearing Clearance

Use a dial indicator to measure the wheel shaft and bearing clearance.

Wheel Shaft and Bearing Clearance — mm(in)

Standard	Limit
0.056 — 0.127 (0.0022 — 0.0050)	0.127 (0.0050)

ISUZU

KB - SERIES

WORKSHOP MANUAL

SECTION 6

PETROL ENGINE DIAGNOSIS

SECTION 6
TROUBLESHOOTING

TABLE OF CONTENTS

PAGE

1. Hard Starting 6– 3
2. Unstable Idling 6– 8
3. Insufficient Power 6–10
4. Abnormal Combustion 6–12
5. Excessive Fuel Consumption 6–14
6. Excessive Oil Consumption 6–16
7. Overheating 6–17
8. Oil Pressure Does Not Rise 6–19
9. Abnormal Engine Noise 6–21
10. Flat Spot 6–27

Refer to the following troubleshooting charts to quickly pinpoint and repair engine problems.

1. This Section is divided into ten Sub-Sections.
2. Each troubleshooting chart has three headings arranged from left to right.

Example:

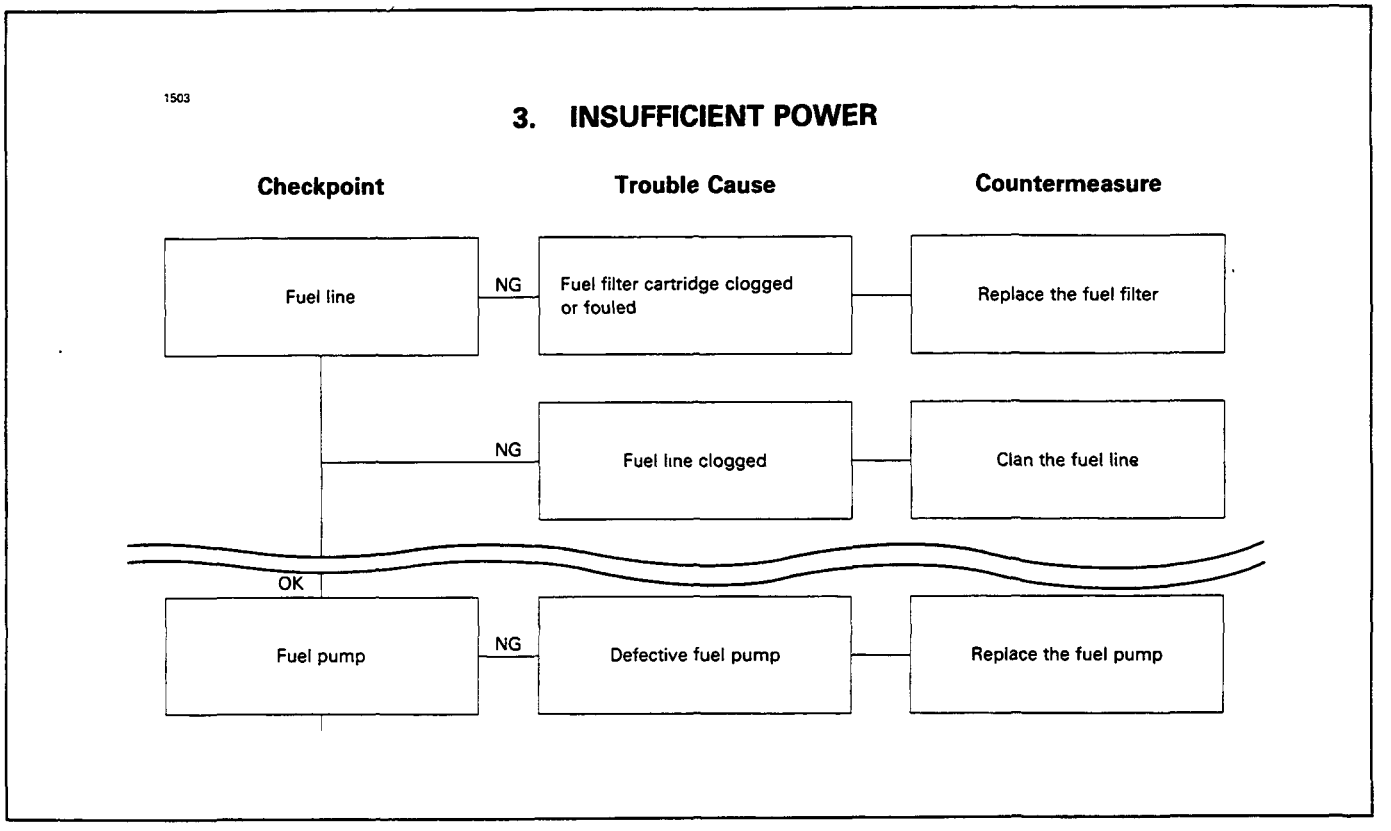

3. Easily checked areas are presented at the beginning of the troubleshooting chart. Procedures become more complex as the chart progresses.
4 It is suggested that you work from the beginning of the troubleshooting chart. Do not start from the middle.
5. It is possible that a seemingly apparent engine problem is not related to the engine.

   For example, the engine may appear to have insufficient power. This could be caused by dragging brakes or a slipping clutch instead of an engine malfunction.

   Refer to the other troubleshooting charts if required.
6. Optional equipment and variations are included in the troubleshooting charts.

   If the vehicle you are servicing is not equipped with a particular option or variation noted in the "Checkpoint" frame, disregard the frame and move on to the next one.

1501

150101

1. HARD STARTING

1. STARTER INOPERATIVE

Checkpoint		Trouble Cause	Countermeasure
Battery	NG	Loose battery cable terminals Poor connections due to rusting	Clean and/or retighten the battery cable terminals
	NG	Battery discharged or weak	Recharge or replace the battery
	NG	Fan belt loose or broken	Adjust or replace the fan belt
OK			
Main fuse	NG	Main fuse shorted	Replace the main fuse
OK			
Starter switch	NG	Defective starter switch	Replace the starter switch
OK			
Starter motor	NG	Defective magnetic switch	Repair or replace the magnetic switch
	NG	Defective starter motor	Repair or replace the starter motor

150102

2. STARTER MOTOR OPERATES BUT ENGINE DOES NOT TURN OVER

Checkpoint		Trouble Cause	Countermeasure
Battery	NG	Loose battery cable terminals Poor connections due to rusting	Clean and/or retighten the battery cable terminals
	NG	Battery discharged or weak	Recharge or replace the battery
OK			
Starter motor	NG	Defective pinion ring gear	Replace the pinion gear
	NG	Brush wear Weak brush spring	Replace the brush and/or the brush spring
OK			
Distributor cap	NG	Leaking	Replace the distributor cap

Continued on the next page

Continued from the previous page

Checkpoint		Trouble Cause	Countermeasure
Ignition coil	NG	Defective ignition coil	Replace the ignition coil
	NG	Poor connections in the primary and/or secondary ignition coil circuits	Reconnect the primary and secondary ignition coil circuits
	NG	Primary ignition coil circuit open	Replace the primary ignition coil
High-tension cable	NG	Disconnect or broken high tension cable	Reconnect the high tension cable Replace the high tension cable
Spark plugs	NG	Dirty or defective spark plugs	Clean the spark plugs and adjust the gaps Replace the spark plugs
Ignition timing	NG	Incorrect ignition timing	Adjust the ignition timing
Engine	NG	Piston, crankshaft bearing seizure, or other damage	Repair or replace the related parts

150103

3. ENGINE TURNS OVER BUT DOES NOT START

FUEL IS NOT BEING DELIVERED TO THE CARBURETOR

Checkpoint		Trouble Cause	Countermeasure
Fuel	NG	Fuel tank is empty	Fill the fuel tank
Fuel piping (OK)	NG	Clogged or damaged fuel lines Loose fuel line connections	Repair or replace the fuel lines Retighten the fuel line connections
Fuel filter (OK)	NG	Clogged fuel filter	Replace the fuel filter
	NG	Water in the fuel line	Bleed the fuel line
Fuel pump (OK)	NG	Defective fuel pump	Replace the fuel pump
Carburetor (OK)	NG	Defective carburetor	Repair or replace the carburetor
	NG	Incorrect fuel level in float chamber	Adjust the float level arm

Continued on the next page

Checkpoint		Trouble Cause		Countermeasure
Continued from the previous page				
Carburetor	NG	Choke valve inoperative	—	Adjust or replace the choke mechanism

1500010302

FUEL IS BEING DELIVERED TO THE CARBURETOR

Fuel	NG	Use of the wrong fuel	—	Use the correct fuel
	NG	Water particles in the fuel	—	Charge the fuel

1502

2. UNSTABLE IDLING

Checkpoint		Trouble Cause	Countermeasure
Idling system	NG	Idling speed improperly adjusted	Adjust the idling speed
OK			
Choke system	NG	Choke system out of adjustment	Adjust the choke system
OK			
Float chamber fuel level	NG	Fuel level too high or too low	Adjust the float level
OK			
Jet	NG	Jets clogged or damaged	Overhaul the carburetor
OK			
Mixture (If so equipped)	NG	Defective mixture control valve	Replace the mixture control valve
OK			
Coasting fuel system	NG	Coasting fuel system not functioning properly	Adjust the coastinbg richer system and the coasting fuel cut system
OK			
EGR valve (If so equipped)	NG	Defective EGR valve	Replace the EGR valve

Continued on the next page

Continued from the previous page

Checkpoint		Trouble Cause	Countermeasure
Thermal vacuum valve (If so equipped)	NG	Thermal vacuum valve does not operate when cold	Replace the thermal vacuum valve
Air cleaner	NG	Clogged air cleaner element	Replace the air cleaner element
Carburetor fitting	NG	Loose carburetor intake manifold Defective manifold gasket	Retighten the intake manifold Replace the intake manifold gasket
Ignition timing	NG	Incorrect ignition timing	Adjust the ignition timing
Valve clearance	NG	Valve clearance incorrectly adjusted	Adjust the valve clearance
Valve seating	NG	Valve incorrectly seated	Correct the valve seating
Compression pressure	NG	Blown out cylinder head gasket Worn cylinder liner Piston ring sticking or broken	Replace the applicable parts

1503

3. INSUFFICIENT POWER

Checkpoint		Trouble Cause	Countermeasure
Fuel system	NG	Clogged fuel pipe and filter	Clean the fuel pipe and/or replace the fuel filter
	NG	Water particles in the fuel	Replace the fuel
	NG	Use of wrong fuel	Use fuel of the specified octane rating
OK			
Fuel pump	NG	Defective fuel pump	Replace the fuel pump
OK			
Carburetor	NG	Fuel level too low or too high	Adjust the float level
	NG	Jets clogged	Overhaul the carburetor Clean the jet
OK			
Mixture control valve (If so equipped)	NG	Defective mixture control valve	Replace the mixture control valve

Continued on the next page

Continued from the previous page

Checkpoint		Trouble Cause	Countermeasure
Air vent valve	NG	Defective air vent solenoid valve	Replace the air vent solenoid Valve
Fuel tank	NG	Fuel pump not breathing sufficiently due to clogged evaporative emission control circuit	Clean the fuel tank
Air cleaner	NG	Clogged air cleaner element	Replace or clean the air cleaner element
Carburetor fitting and gasket	NG	Loose carburetor fitting Defective gasket	Replace the carburetor gasket Retighten the carburetor
Air intake hose	NG	Kinked or flattened air intake hose	Straighten or replace the air intake hose
Spark plug	NG	Dirty spark plug Spark plug heat range inadequate	Clean or replace the spark plug Install spark plugs having an adequate heat range
Ignition timing	NG	Incorrect ignition timing	Adjust the ignition timing

1504

150401

4. ABNORMAL COMBUSTION

1. MIXTURE TOO LEAN

Checkpoint		Trouble Cause	Countermeasure
Jet	NG	Jet clogged	Overhaul the carburetor
OK			
Carburetor intake manifold	NG	Defective gasket	Replace the gasket
	NG	Loose intake manifold	Tighten the intake manifold
OK			
Fuel supply	NG	Insufficient fuel being delivered to the carbretor	Replace the fuel pump Replace the fuel filter Clean the fuel pipe
Slow cut solenoid valve	NG	Broken slow cut solenoid valve	Replace the slow cut solenoid valve

150402

2. MIXTURE TOO RICH

Checkpoint		Trouble Cause	Countermeasure
Choke valve	NG	Choke valve does not open fully	Repair or adjust the choke valve control
OK			
Air jet	NG	Air jet clogged	Overhaul the carburetor
OK			
Carburetor float	NG	Fuel level too high or too low	Adjust the float level
OK			
Air cleaner	NG	Clogged air cleaner element	Replace or clean the air cleaner element
OK			
Combustion chamber	NG	Carbon deposits in the combustion chamber	Remove the carbon deposits
OK			
Spark plug	NG	Dirty spark plug Spark plug heat range inadequate	Clean or replace the spark plug Install spark plugs having an adequate heat range
OK			
Ignition timing	NG	Incorrect ignition timing	Adjust the ignition timing

1505

5. EXCESSIVE FUEL CONSUMPTION

Checkpoint		Trouble Cause	Countermeasure
Fuel system	NG	Fuel leakage	Repair or replace the applicable parts
OK			
Fuel mixture	NG	Engine misfire due to excessively lean fuel mixture	Refer to "ABNORMAL CONSUMPTION"
	NG	Excessively rich fuel mixture	Refer to "ABNORMAL COMBUSTION"
OK			
Ignition timing	NG	Incorrect ignition timing	Adjust the ignition timing
OK			
Idling speed	NG	Idling speed too high	Adjust the idling speed
OK			
Accelerator control	NG	Accelerator pedal return sluggish	Adjust or repair the accelerator pedal linkage
OK			
Valve clearance	NG	Valve clearance incorrectly adjusted	Adjust the valve clearance

Continued on the next page

Continued from the previous page

Checkpoint		Trouble Cause	Countermeasure
Compression pressure	NG	Blown out cylinder gasket Worn cylinder liner Piston ring sticking or broken Improper seating between the valve and the valve seat	Replace the applicable parts
Valve spring	NG	Weakened or broken valve spring	Replace the valve spring
Clutch	NG	Clutch slipping	Adjust the clutch control system Replace the clutch driven plate
Brake	NG	Brake drag Broken brake return spring Brake return spring out of position	Adjust the brake lining clearance Install or replace the brake return spring
Transmission gear shift selection	NG	Wrong gear selection	Caution operator on gear selection

1506

6. EXCESSIVE OIL CONSUMPTION

Checkpoint		Trouble Cause	Countermeasure
Engine oil	NG	Wrong grade of engine oil Too much engine oil	Replace the engine oil Reduce the engine oil volume
OK			
Ft. or Rr. oil seals and gaskets	NG	Oil leakage from the oil seals and/or the gaskets	Replace the oil seal and/or the gasket
OK			
Oil pressure unit	NG	Loose or broken oil pressure unit	Retighten or replace the oil pressure unit
OK			
Oil pressure switch	NG	Loose or broken oil pressure	Retighten or replace the oil pressure switch

1507

7. OVERHEATING

Checkpoint		Trouble Cause	Countermeasure
Coolant	NG	Insufficient coolant	Replace the coolant
OK			
Cooling fan coupling (If so equipped)	NG	Oil leakage from the cooling fan coupling	Replace the cooling fan coupling
OK			
Fan belt	NG	Fan belt loose or cracket causing slippage	Adjust or replace the fan belt
OK			
Radiator	NG	Defective radiator cap Clogged radiator core	Replace the radiator cap Clean the radiator core
OK			
Water pump	NG	Defective water pump	Repair or replace the water pump
OK			
Cylinder head and cylinder	NG	Defective sealing cap resulting in water leakage	Replace the sealing cap
OK			
Thermostat	NG	Defective thermostat	Replace the thermostat

Continued on the next page

Continued from the previous page

Checkpoint		Trouble Cause	Countermeasure
Cooling system	NG	Cooling system clogged	Clean the cooling system
Ignition timing	NG	Incorrect ignition timing	Adjust the ignition timing
Engine oil	NG	Wrong grade of engine oil Insufficient engine oil	Replace the engine oil Add engine oil
Exhaust system	NG	Excessive back pressure in the exhaust system	Clean the exhaust system Replace the defective parts
Fuel mixture	NG	Mixture too lean	Refer to "MIXTURE TOO LEAN"
Mixture control valve (If so equipped)	NG	Control valve does not close	Replace the control valve

1508

8. OIL PRESSURE DOES NOT RISE

Checkpoint		Trouble Cause	Countermeasure
Engine oil	NG	Wrong grade of engine oil Insufficient engine oil	Replace the engine oil Add engine oil
OK			
Oil pressure unit or gauge	NG	Defective oil pressure unit or gauge	Repair or replace the oil pressure unit and gauge
OK			
Oil filter	NG	Clogged oil filter	Replace the oil filter element or the oil filter cartridge
OK			
Regulating valve	NG	Regulating valve sticking	Replace the regulating valve
OK			
Oil pump	NG	Clogged oil pump strainer	Clean the oil pump strainer
	NG	Worn oil pump parts	Replace the applicable oil pump parts
OK			
Rocker arm shaft	NG	Worn rocker arm	Replace the rocker arm

Continued on the next page

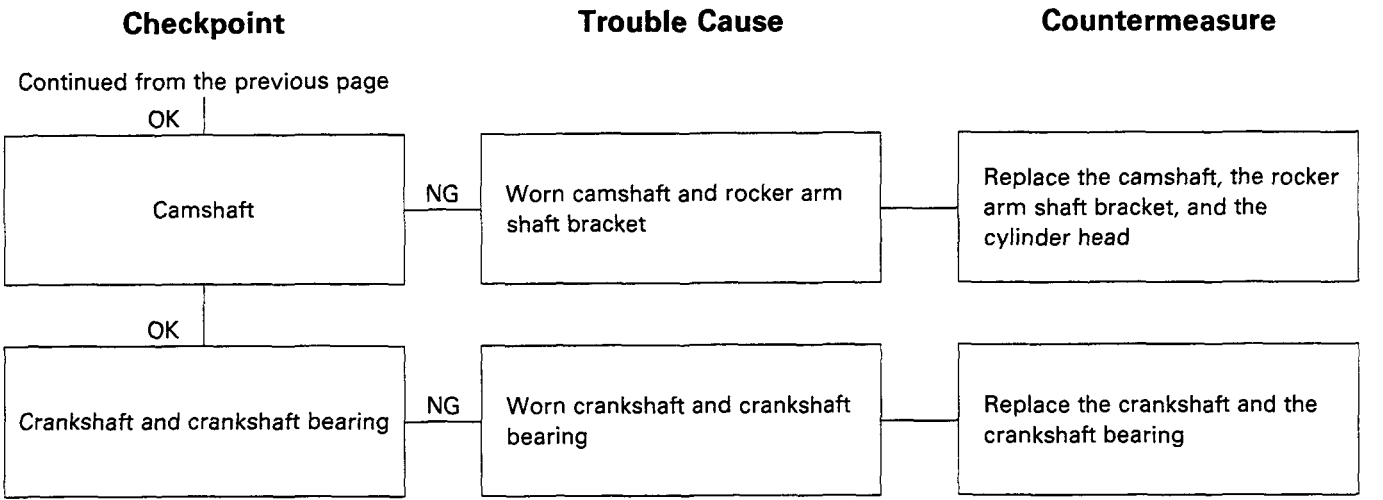
Checkpoint
Trouble Cause
Countermeasure
Continued from the previous page
OK
Camshaft
NG
Worn camshaft and rocker arm shaft bracket
Replace the camshaft, the rocker arm shaft bracket, and the cylinder head
OK
Crankshaft and crankshaft bearing
NG
Worn crankshaft and crankshaft bearing
Replace the crankshaft and the crankshaft bearing

1509

150901

9. ABNORMAL ENGINE NOISE

1. ENGINE KNOCKING

Allow the engine to warm up before beginning the troubleshooting procedure.

Checkpoint		Trouble Cause	Countermeasure
Fuel	NG	Octane rating too low	Replace the fuel
OK			
Ignition timing	NG	Incorrect ignition timing	Adjust the ignition timing
OK			
Spark plug	NG	Spark plug heat range inadequate	Install spark plugs having an adequate heat range
OK			
Compression pressure	NG	Broken piston ring Blown out head gasket	Replace the head gasket and/or the piston ring along with the related parts
OK			
Combustion chamber	NG	Carbon deposits in the combustion chamber	Remove the carbon deposits

150902

2. GAS LEAKAGE NOISE

Allow the engine to warm up before beginning the troubleshooting procedure.

Checkpoint		Trouble Cause	Countermeasure
Exhaust pipe	NG	Loosely connected exhaust pipe Broken exhaust pipe	Tighten the exhaust pipe connection Replace the exhaust pipe
OK			
Exhaust manifold	NG	Loosely connected exhaust manifold Loose spark plug	Tighten the exhaust manifold connection Tighten the spark plug
OK			
Cylinder head gasket	NG	Damaged cylinder head gasket	Replace the cylinder head gasket

150903

3. CONTINUOUS NOISE

Checkpoint		Trouble Cause	Countermeasure
Allow the engine to warm up before beginning the troubleshooting procedure.			
Fan belt	NG	Loose fan belt	Adjust the fan belt tension
OK			
Water pump bearing unit	NG	Worn or damaged water pump bearing unit	Replace the water pump bearing unit
OK			
Alternator	NG	Defective alternator	Replace the alternator
OK			
Valve clearance	NG	Valve clearance incorrectly adjusted	Adjust the valve clearance

150904

4. SLAPPING NOISE

Allow the engine to warm up before beginning the troubleshooting procedure.

Checkpoint		Trouble Cause	Countermeasure
Valve clearance	NG	Valve clearance incorrectly adjusted	Adjust the valve clearance
OK			
Rocker arm	NG	Damaged rocker arm	Replace the rocker arm
OK			
Valve stem and valve guide	NG	Seized valve stem	Replace the valve stem and the valve guide
OK			
Valve spring	NG	Broken valve spring	Replace the valve spring
OK			
Valve seat	NG	Incorrect valve seating	Lap the valve seat Replace the velve seat
OK			
Rocker arm and camshaft contact faces	NG	Worn or pitted contact faces	Replace the camshaft and the rocker arm
OK			
Flywheel	NG	Loose flywheel bolt	Retighten the flywheel bolt

Continued on the next page

Continued from the previous page

Checkpoint		Trouble Cause	Countermeasure
Crankshaft and thrust bearing	NG	Worn or damaged crankshaft and/or thrust bearing	Replace the crankshaft and the thrust bearing
Crankshaft and connection rod bearing	NG	Worn or damaged crankshaft and/or connecting rod bearing	Replace the connecting rod and the connecting rod bearing
Connecting rod and piston pin	NG	Worn or damaged connecting rod and piston pin	Replace the connecting rod and the piston pin
Piston and cylinder	NG	Worn or damaged piston and cylinder	Rebore the cylinder and replace the piston

150905

5. OTHER NOISE

Checkpoint		Trouble Cause	Countermeasure
Allow the engine to warm up before beginning the troubleshooting procedure.			
Water pump	NG	Defective water pump bearing unit	Replace the bearing unit
OK			
Air pump (If so equipped)	NG	Mechanical trouble in the air pump	Replace the air pump
	NG	Relief valve leakage	Replace the relief valve
OK			
Air pump drive belt	NG	Air pump drive belt slipping	Adjust the drive belt tension

1510

151001

10. FLAT SPOT

1. FLAT SPOT DURING HIGH SPEED OPERATION

Checkpoint		Trouble Cause	Countermeasure
Carburetor main jet	NG	Clogged main jet	Clean or replace the main jet
OK			
Power valve	NG	Clogged power valve	Clean or replace the power valve
OK			
Secondary valve	NG	Sagged diaphragm spring Clogged vacuum port	Clean the vacuum port Replace the diaphragm, the diaphragm spring, and the throttle body

2. FLAT SPOT DURING ACCELERATION

Checkpoint		Trouble Cause	Countermeasure
Idling speed	NG	Idling speed too high	Adjust the idling speed
OK			
Air vent solenoid valve	NG	Defective air vent solenoid valve	Replace the air vent solenoid valve
OK			
Accelerator pump	NG	Excessive play in the pump linkage	adjust or replace the linkage
	NG	Pump is not supplying sufficient fuel	Replace the accelerator pump
	NG	Clogged pump strainer	Clean or replace the strainer
OK			
Main jet	NG	Clogged main jet	Clean or replace the main jet
OK			
Vacuum hole	NG	Clogged vacuum hole	Clean the vacuum hole
OK			
Fuel pump	NG	Defective fuel pump	Replace the fuel pump

DELTA OPEL ISUZU SUZUKI

Hi - Tech

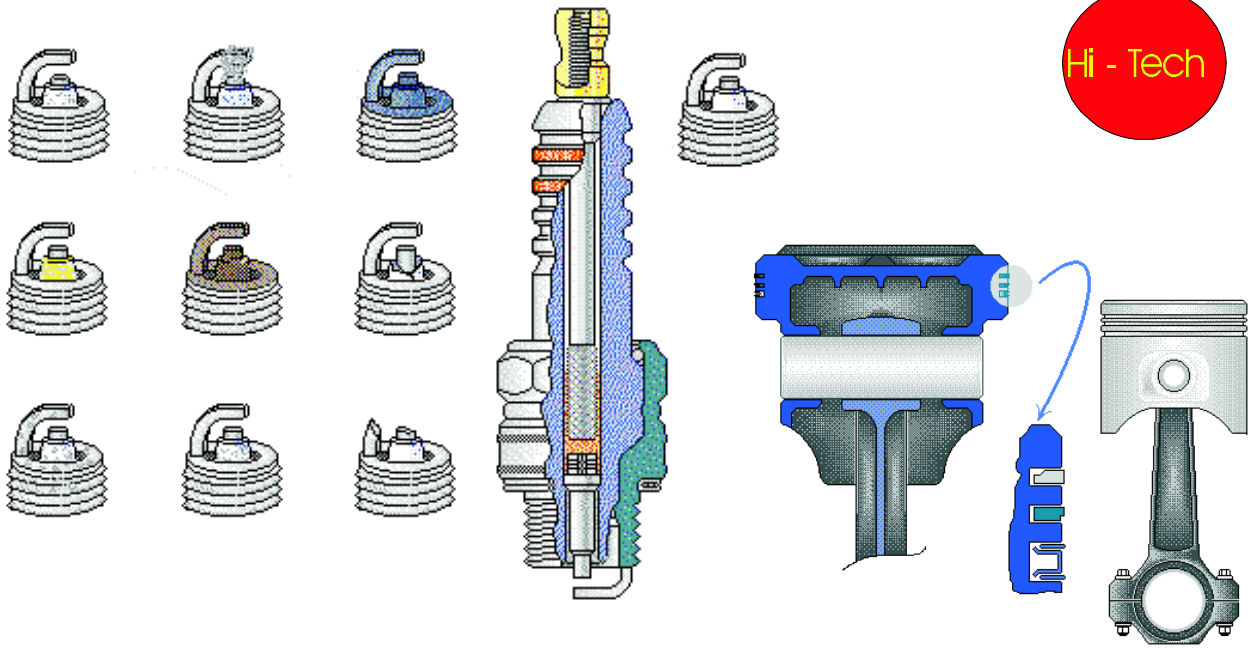

Index

Specs.

Servicing

Overhaul

Lubrication

KB TF 140
Petrol - Engine

ISUZU

SECTION 6A
ENGINE MECHANICAL

TABLE OF CONTENTS

PAGE

Main Data and Specifications 6A– 2
Torque Specifications 6A– 4
  Standard Bolts 6A– 4
  Flare Nuts 6A– 4
  Special Parts Fixing Nuts and Bolts 6A– 5
Recommended Liquid Gasket 6A– 13
Loctite Application Procedure 6A– 14
Servicing 6A– 15
General Description 6A– 33
Removal and Installation 6A– 34
Engine Repair Kit 6A– 50
Engine Overhaul 6A– 51
  Disassembly 6A– 51
  Inspection and Repair 6A– 65
  Reassembly 6A– 91
Lubricating System 6A–121

MAIN DATA AND SPECIFICATIONS
(CARBURETTOR TYPE)

Item \ Engine model		4ZC1	4ZE1
Engine type		Four-cycle, water cooled, crossflow with single overhead camshaft	
Combustion chamber type		Hemispherical	
Timing train system		Belt drive	
No. of cylinders - bore x stroke		4-88.0x82.0 (3.46x3.23)	4-92.6x95.0 (3.64x3.74)
No. of piston rings		Compression rings: 2/Oil ring:1	
Total piston displacement	cc(in^3)	1,994 (121.7)	2,559 (156.2)
Compression ratio (to 1)		8.0	8.3
Compression pressure	kg/cm^2(psi/kPa)	12.0 (170.6/1,177.2)	
Engine weight (Dry)	kg(lb)	Approx. 135 (297.7)	Approx. 149 (328.5)
Firing order		1 - 3 - 4 - 2	
Ignition timing (BTDC)	deg/rpm	10/800	6/800
Idling speed	rpm	800	800
Valve clearance (At cold)			
Intake	mm(in)	0.15 (0.006)	
Exhaust	mm(in)	0.25 (0.010)	
Valve clearance (At hot)			
Intake	mm(in)	0.20 (0.008)	
Exhaust	mm(in)	0.30 (0.012)	
Intake valves Open at (BTDC)	deg	21	
Close at (ABDC)	deg	65	
Exhauxt valves Open at (BBDC)	deg	55	
Close at (ATDC)	deg	20	
Ignition system		Fully transistorized battery ignition	
Distributor type		Contract pointless	
Diatributor advance type		Centrifugal and vacuum	
Spark plug type		BPR6ES-11 ,or BP6ES or W20EXR-U or BPR6ES	
Spark lug gap	mm(in)	1.0-1.1 (0.040-0.043) for catalytic conventer vehicle 0.7-0.8 (0.028-0.031) Except catalytic conventer vehicle	

Item	Engine model	4ZC1	4ZE1
Lubricating system			
Lubricating method		Full flow pressure circulation	
Specified engine oil (API grade)		SE, or SF	
Oil pressure	kg/cm²(psi/kPa)rpm	4.0-5.0 (56.9-71.1/392.4-490.5)/4,000 [SAE 10W-30/API SC grade] engine oil after warm-up	
Oil pump type		Trochoid	
Oil filter type		Cartridge, full flow	
Oil capacity	lit. (US/UK gal.)	4.9 (1.24, 1.08)	5.5 (1.45, 1.21)
Cooling system			
Radiator type		Corrugated fin with reserve tank	
Coolant capacity	lit. (US/UK gal.)	8.6 92.2, 1.9)	9.0 (2.3, 2.0)
Water pump type		Centrifugal	
Thermostat type		Wax pellet with jiggle valve	
Fuel system			
Carburetor type		Stomberg 2-barrel 2-stage	
Fuel pump type		Mechanical	
Fuel pressure	kg/cm²(psi/kPa)rpm	0.25 (3.56/24.50) for HITACHI CARB 0.24 (3.4/23.5) for NIPPON KIKAI CARB	
Fuel filter type		Cartridge paper element	
Air cleaner type		Dry paper element or Oil wetted (viscous) paper element	
Battery	Type/V-A x No. of units	34B19R (12/33) 46B24R (12/45)	50D20R (12/50)
Alternator capacity	V-A(W)	12-55 (660)	
Starter motor output	V-kW	12-1.0	12-1.2

TORQUE SPECIFICATION

STANDARD BOLTS

The torque values given in the following table should be applied whenever a particular torque is not specified.

kg·m(lb.ft/N·m)

Strength Class / Bolt Identification / Bolt Diameter× Pitch (mm)	4.8 (4T)	(7T)	8.8 Refined	8.8 Non-Refined	9.8 (9T)
Bolt Identification	4	7	8	.8	9
Bolt Diameter× Pitch (mm)	No mark	—			
M 6 × 1.0	0.60±0.20 (4.33±1.44/5.88±1.96)	0.75±0.25 (5.43±1.80/7.35±2.45)			–
M 8 × 1.25	1.30±0.50 (9.40±3.62/12.74±4.90)	1.75±0.55 (12 66±4.00/17.15±5.39)			2.40±0.70 (17.36±5.06/23.52±6.86)
M10 × 1.25	2.80±0.70 (20.25±5.06/27.44±6.86)	3.75±0.95 (27 12±6.87/36.75±9.31)			5.10±1.30 (36.89±9.40/49.98±12.74)
M12 × 1.25	6.25±1.25 (45.21±9.04/61.25±12.25)	7 75±1.55 (56.06±11.21/75.95±15.19)			9.65±1.95 (69.80±14.10/94.57±19.11)
M14 × 1.5	9.75±1.95 (70.52±14.10/95.55±19.11)	11.85±2.35 (85.71±17.00/116.13±23.03)			14.50±2.90 (104.88±21.00/142.10±28.42)
M16 × 1.5	13.30±2.70 (96.20±19.53/130 34±26.46)	17.30±3.50 (125.13±25.32/169.54±34.30)			20.40±4.10 (147.55±29.66/199.92±40.18)
M18 × 1.5	19.20±3.80 (138.87±27.49/188.16±37.24)	24.90±5.00 (180.10±36.17/244.02±49.00)			29.30±5.90 (211.93±42.67/287.14±57.82)
M20 × 1.5	26.30±5.30 (190.23±38.33/257.74±51.94)	34 40±6.90 (248.82±49.41/337.12±67.62)			40.40±8.10 (292.21±58.59/395.92±79.38)
M22 × 1.5	33.90±8.30 (245.20±60.03/332.22±81 34)	46.25±9.25 (334.53±66.91/453.25±90.65)			54.10±10.80 (391.30±78.12/530.18±105.84)
M24 × 2.0	45.80±9.20 (331.27±66.54/448.84±90.16)	58.20±14.30 (420.96±103.43/570.36±140.14)			70.60±14.10 (510.65±101.99/691.88±138.18)
*M10 × 1.5	2.70±0.70 (19.53±5.06/26.46±6.86)	3.70±0.90 (26.76±6.50/36.26±8.82)			4.90±1.20 (35.44±8.68/48.02±11.76)
*M12 × 1.5	5.80±1.20 (41.95±8.68/56.84±11 76)	7.20±1.40 (52.08±10.13/70.56±13.72)			9.10±1.80 (65.82±13.02/89.18±17.64)
*M14 × 2.0	9.10±1.80 (65.82±13.02/89.18±17.64)	11.20±2.20 (81.01±15.91/109.76±21.56)			13.60±2.70 (98.37±19.53/133.28±26.46)
*M16 × 2.0	12.70±2.50 (91.86±18.08/124 46±24.50)	16.50±3.30 (119.34±23.87/161.70±32.34)			19.50±3.90 (141.04±28.21/191.10±38.22)

An asterisk (*) indicates that the bolts are used for female threaded parts that are made of soft materials such as casting. Those shown in parentheses in the strength class indicate the classification by the old standard.

FLARE NUTS

kg·m(lb.ft/N·m)

Pipe diameter mm(in)	Torque	Pipe diameter mm(in)	Torque
4.76 (0.187)	1.55±0.25 (11.2± 1.8/15.2±2.45)	10.00 (0.394)	5.50±0.5 (39.7±3.6/53.95±4.90)
6.35 (0.250)	2 70±0.30 (19.5±2.1/26.48±2.94)	12.00 (0.472)	9.00±1.0 (65.0±7.2/88.29±9.80)
8.00 (0.315)	4.50±0.50 (32.5±3.6/44 14±4.90)	15.00 (0.591)	10 75±1 25 (77 7±9.0/105.45±12.26)

0204

SPECIAL PARTS FIXING NUTS AND BOLTS

020401

Cylinder Head Cover, Cylinder Head, and Rocker Arm Shaft Bracket

kg·m(lb.ft/N·m)

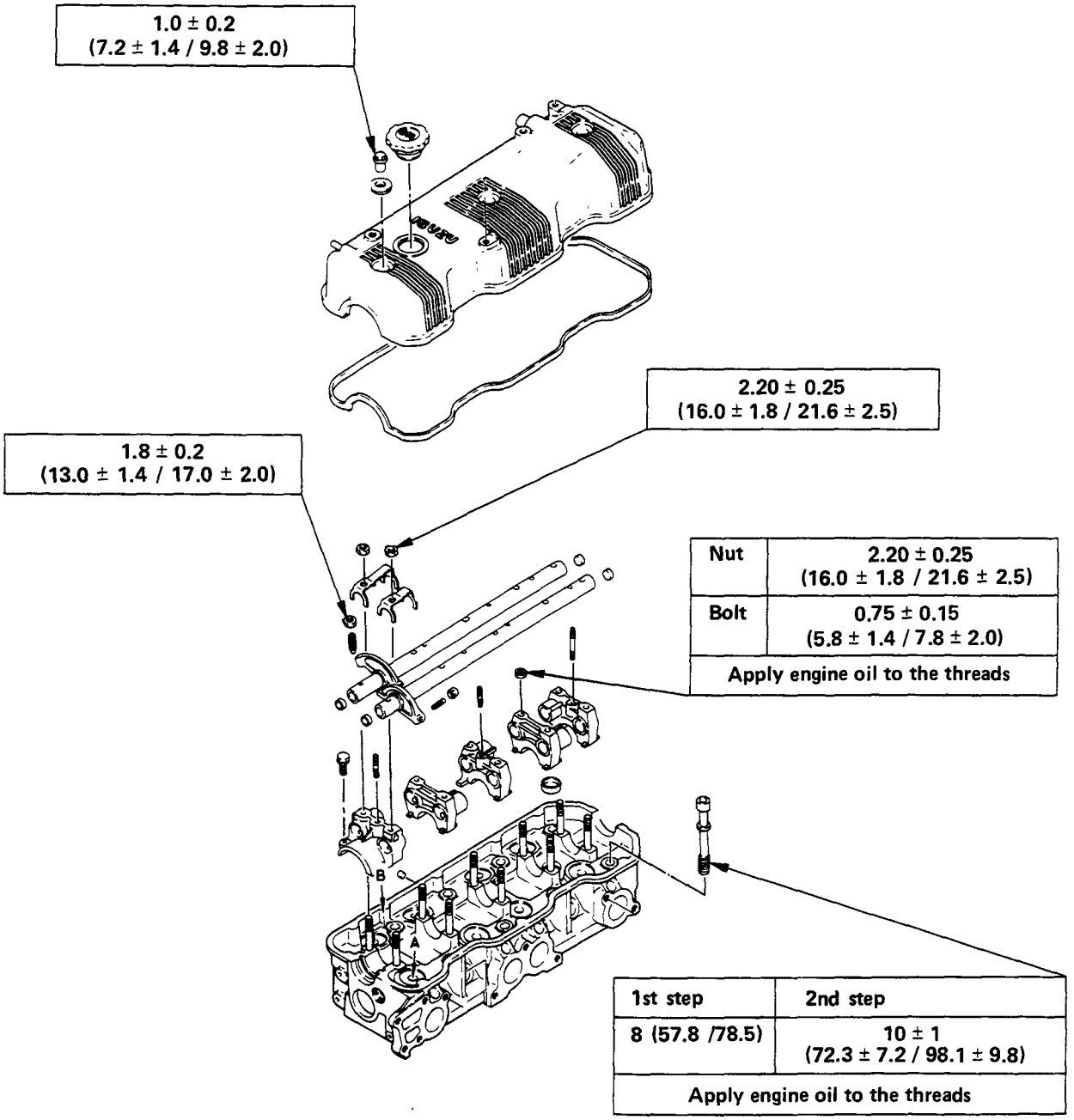

Nut	2.20 ± 0.25 (16.0 ± 1.8 / 21.6 ± 2.5)
Bolt	0.75 ± 0.15 (5.8 ± 1.4 / 7.8 ± 2.0)
Apply engine oil to the threads	

1st step	2nd step
8 (57.8 /78.5)	10 ± 1 (72.3 ± 7.2 / 98.1 ± 9.8)
Apply engine oil to the threads	

020402

Crankshaft Bearing Cap, Connecting Rod Bearing Cap, Crankshaft Damper Pulley, Flywheel, and Oil Pan

kg·m(lb.ft/N·m)

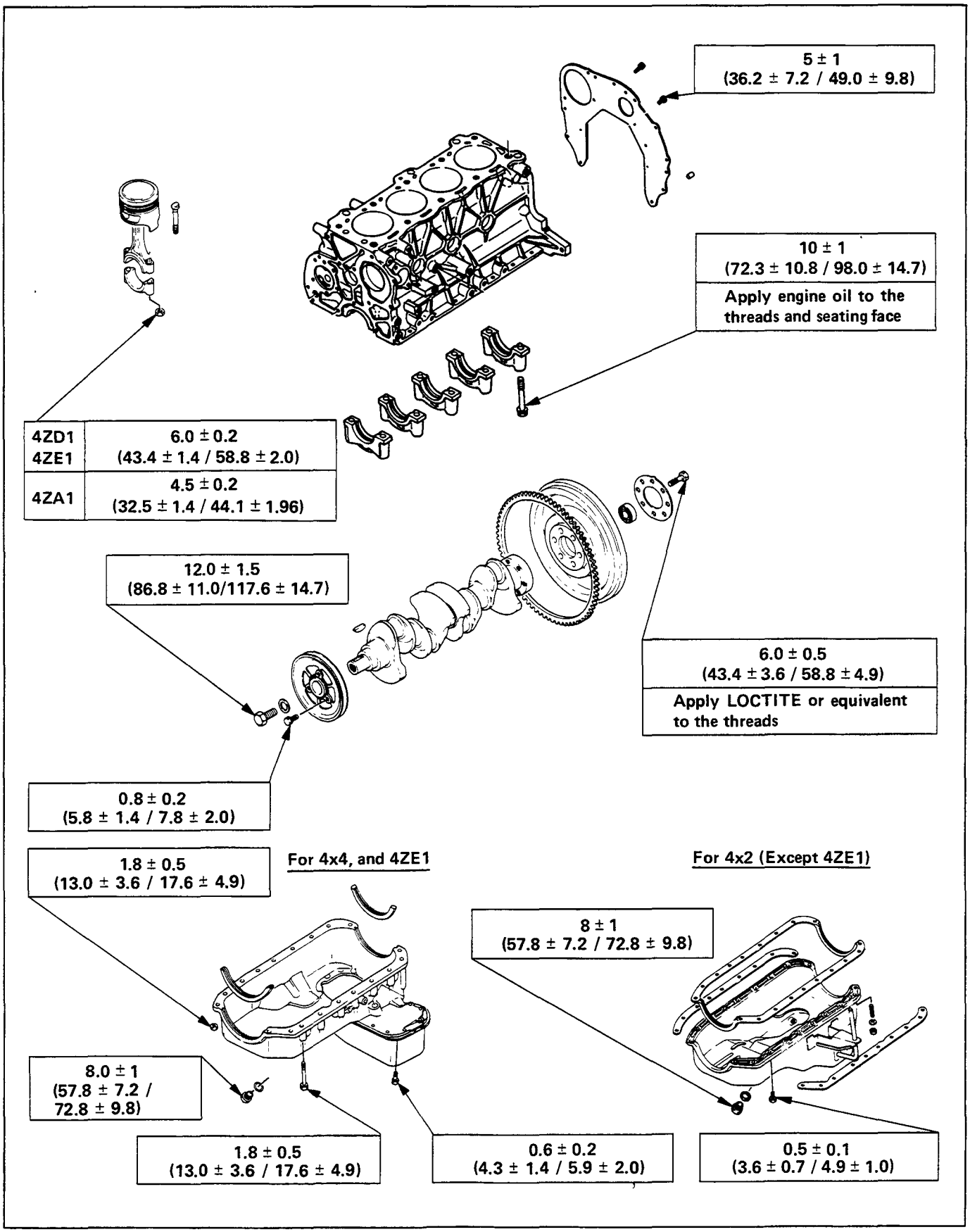

02040302

Timing Cover, Camshaft, and Timing Pulley

kg·m(lb.ft/N·m)

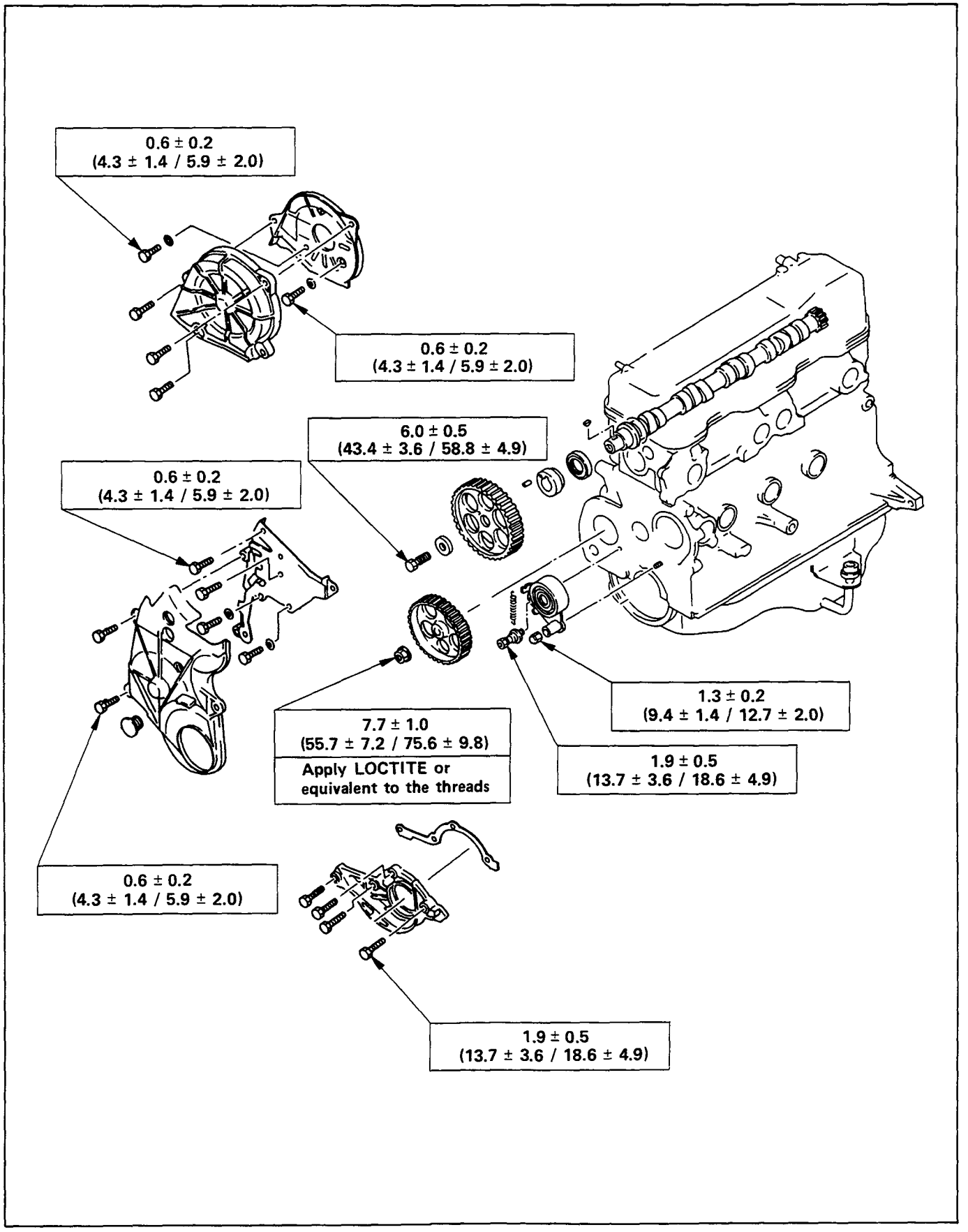

020404

Cooling and Lubricating System

kg·m(lb.ft/N·m)

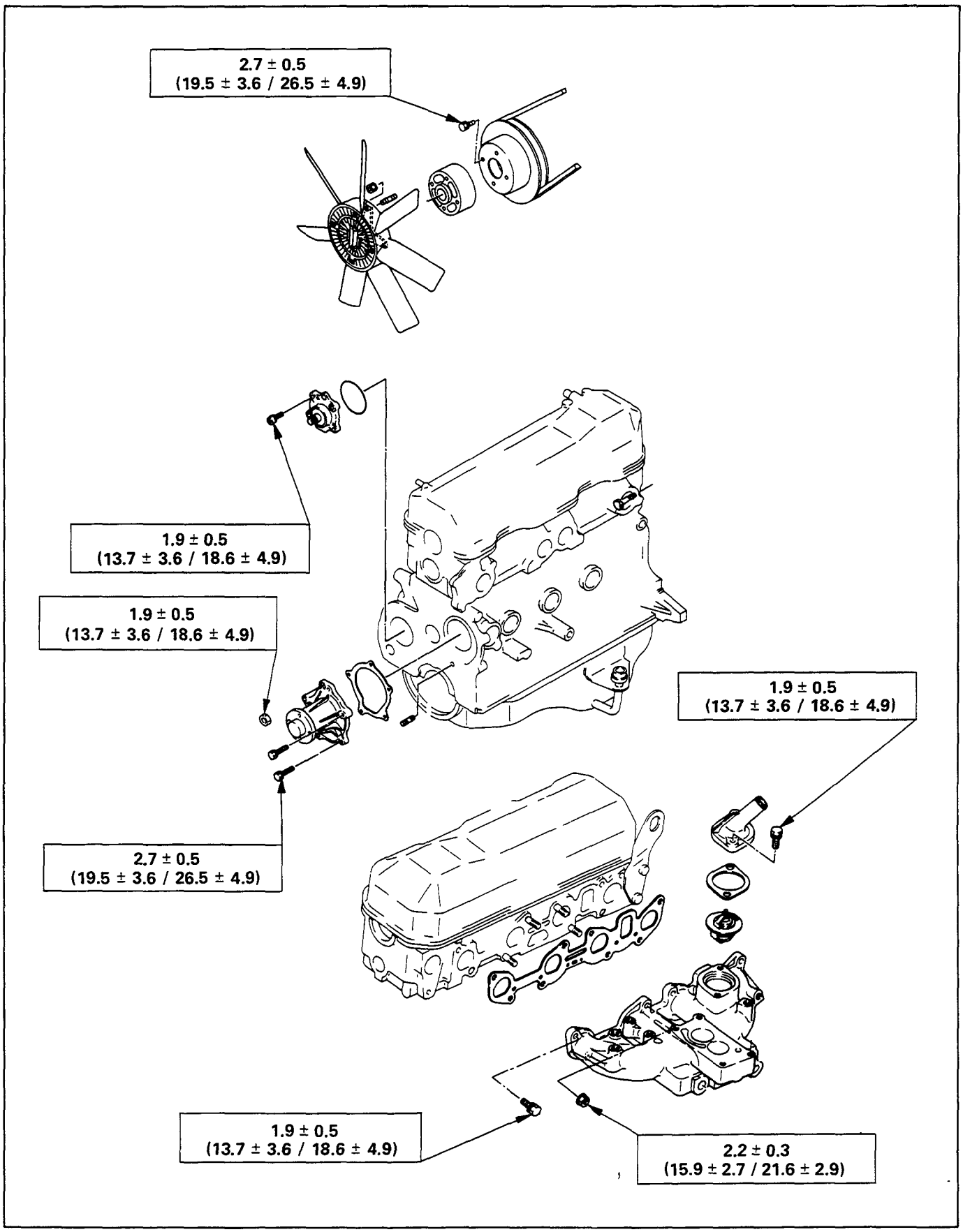

02040501

Intake and Exhaust System

kg·m(lb.ft/N·m)

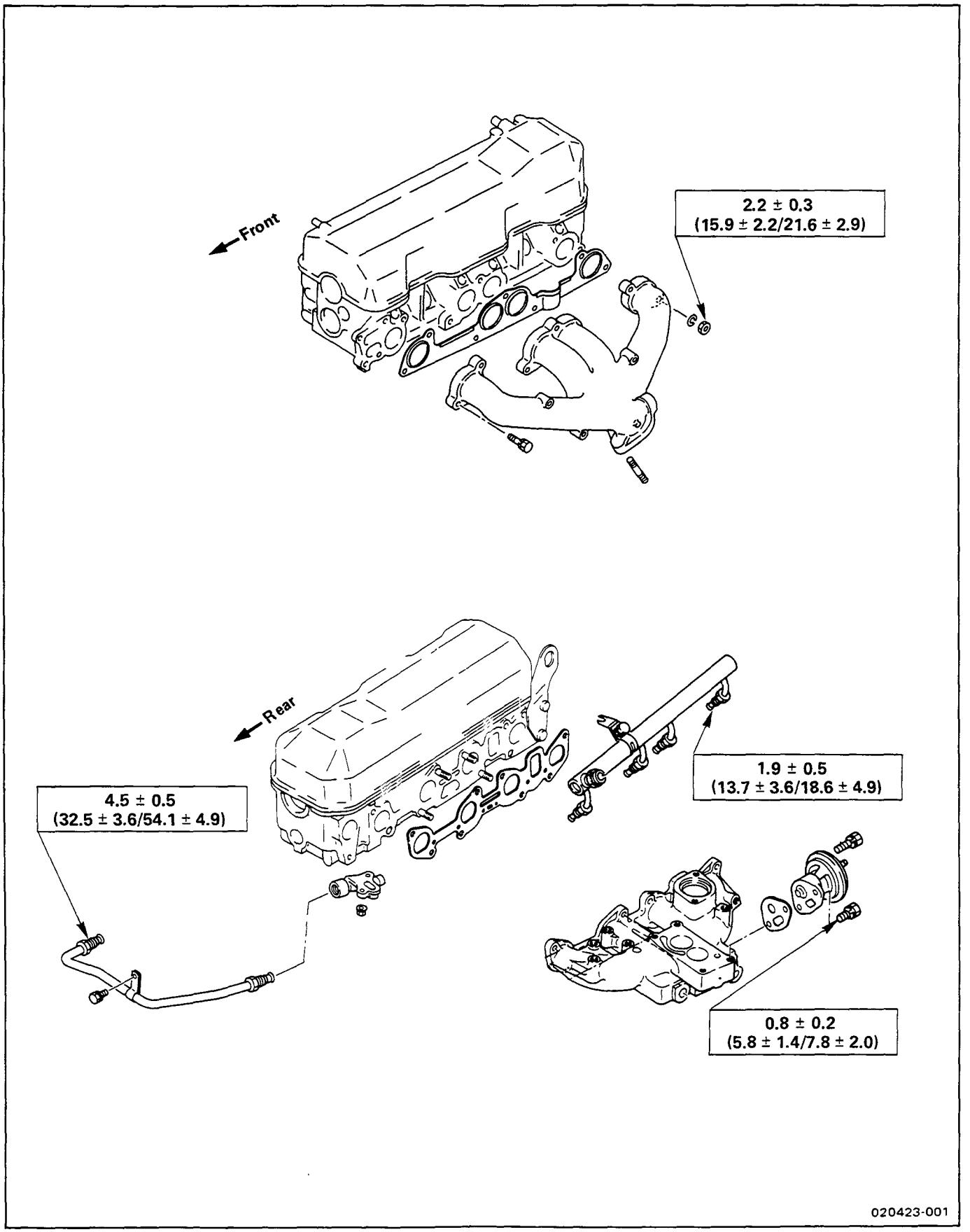

020407

Engine Electricals

kg·m(lb.ft/N·m)

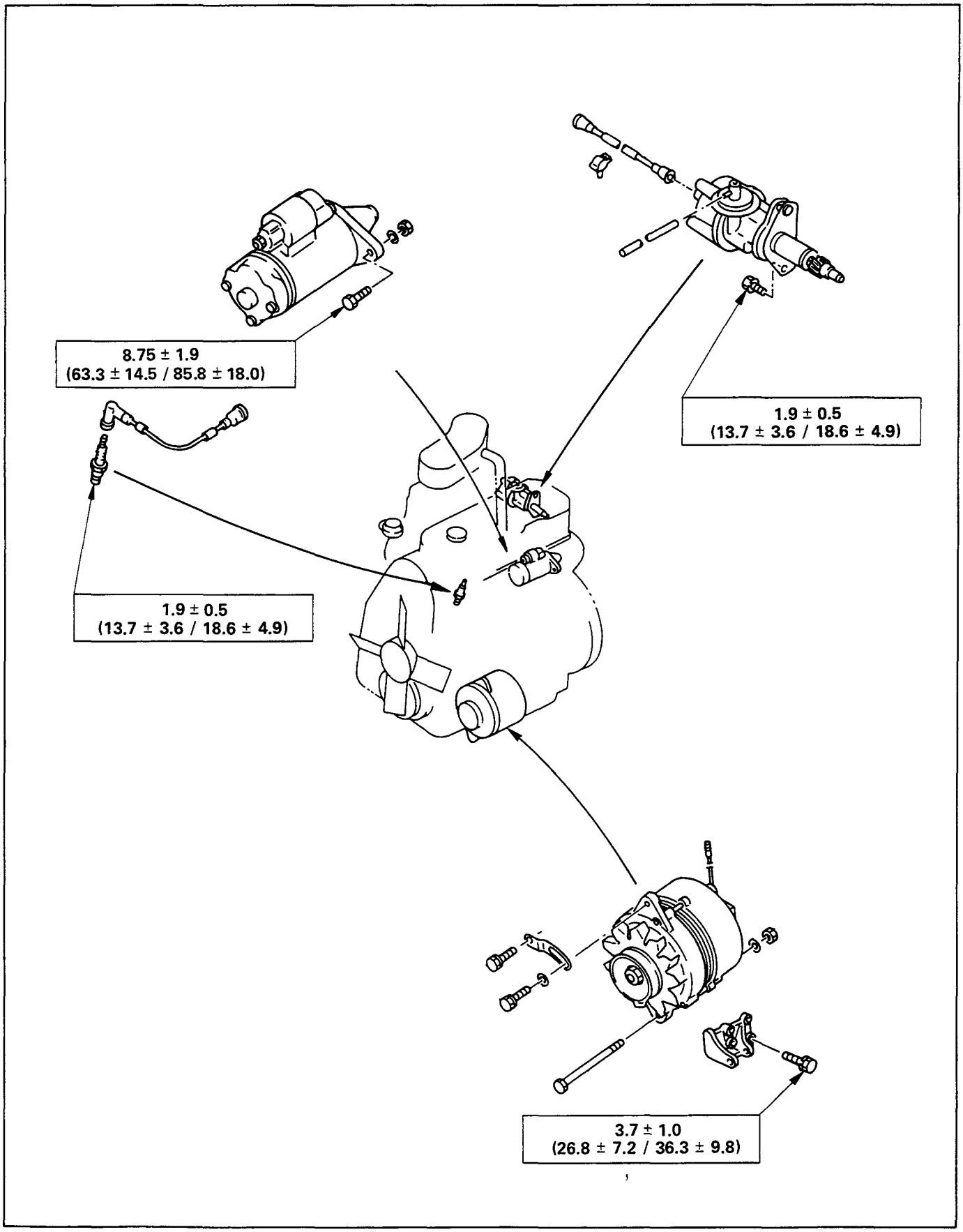

Compressor Bracket and Oil Pump Bracket

kg•m(lb•ft/N•m)

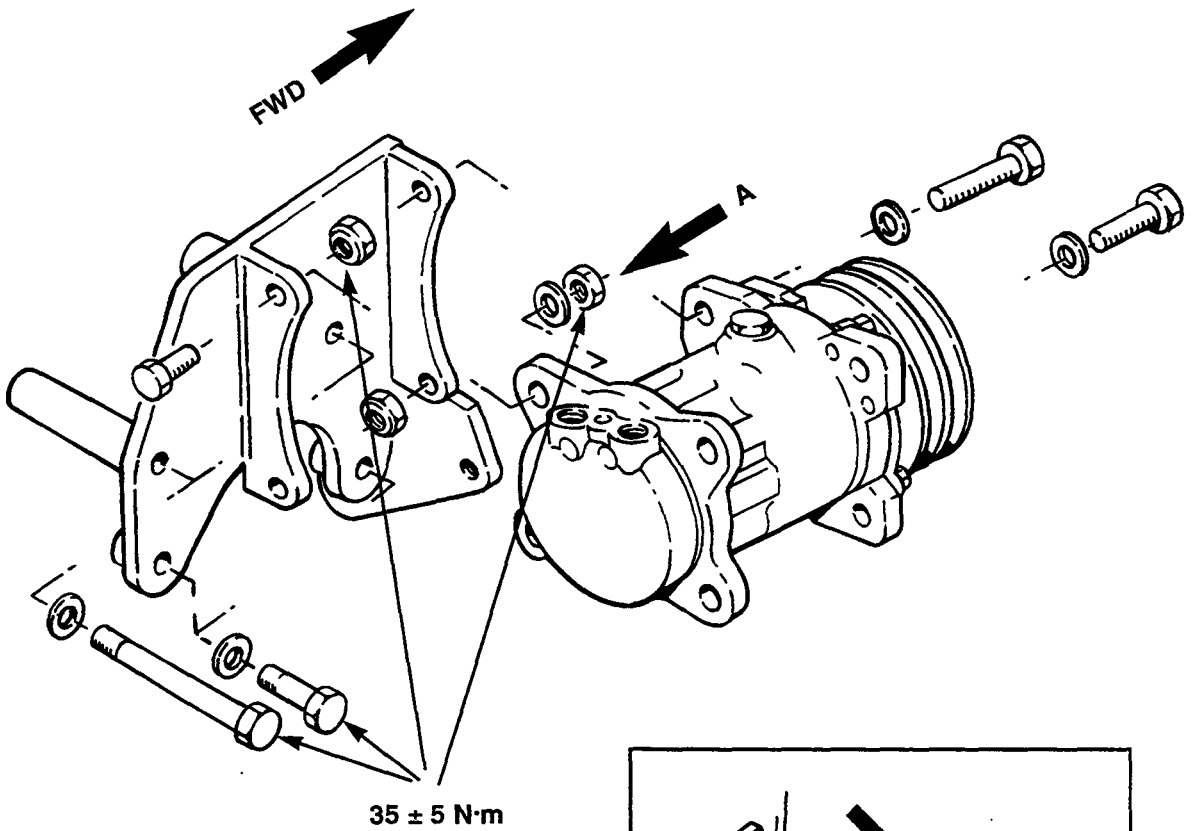

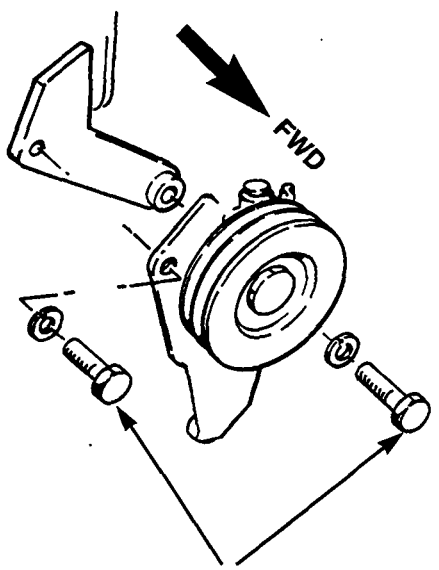

View in direction of arrow A

02041001

Engine Mounting Bracket and Engine Stiffener

kg·m(lb.ft/N·m)

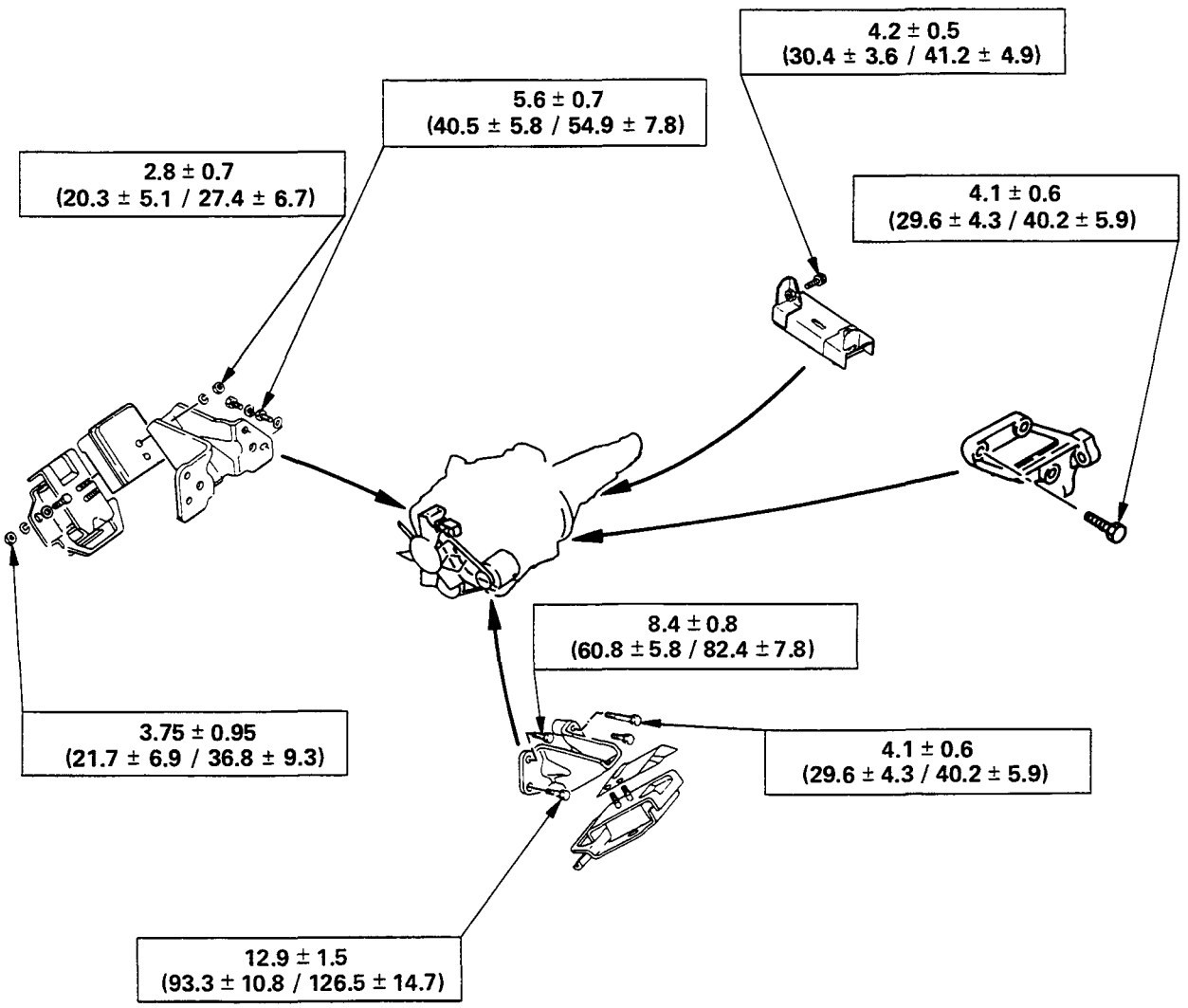

1600

RECOMMENDED LIQUID GASKET

Type	Brand Name	Manufacturer	Remarks
RTV* Silicon Base	ThreeBond 1207B ThreeBond 1207C	Three Bond Three Bond	
Water Base	ThreeBond 1141E	Three Bond	
Solvent	ThreeBond 1104 BelcoBond 4 BelcoBond 401 BelcoBond 402	Three Bond Isuzu Isuzu Isuzu	
Anaerobic	LOCTITE 515 LOCTITE 518	Loctite Loctite	Recommended for transaxle repairs

* RTV : Room Temperature Vulcanizer

Note:

1. **It is very important that the liquid gaskets listed above or their exact equivalent be used on the vehicle.**
2. **Be careful to use the specified amount of liquid gasket.**
   Follow the manufacturer's instructions at all times.
3. **Be absolutely sure to remove all lubricants and moisture from the connecting surfaces before applying the liquid gasket.**
   The connecting surfaces must be perfectly dry.
4. **LOCTITE 515 and LOCTITE 518 harden upon contact with a metal surface.**
   Do not apply LOCTITE 515 or LOCTITE 518 between two metal surfaces having a clearance of greater than 0.25 mm (0.01 in). Poor adhesion will result.

1700

LOCTITE APPLICATION PROCEDURE

LOCTITE Type	LOCTITE Color	Application Steps
LOCTITE 242	Blue	1. Completely remove all lubricant and moisture from the bolts and the female threaded surfaces of the parts to be joined. The surfaces must be perfectly dry. 2. Apply LOCTITE to the bolts. 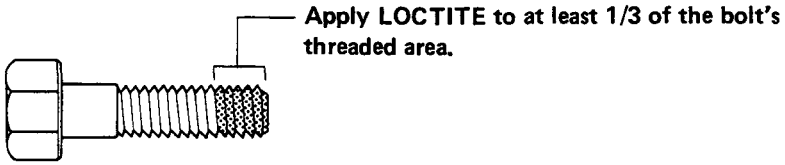 3. Tighten the bolts to the specified torque. 4. Wait at least one hour before continuing the installation procedure.
LOCTITE 262	Red	
LOCTITE 270	Green	
LOCTITE 271	Red	
LOCTITE 515	Violet	1. Completely remove lubricant and moisture from the connecting surfaces. The surfaces must be perfectly dry. 2. Apply a 2.0 — 2.5 mm (0.08 — 0.10 in.) bead of LOCTITE to one of the connecting surfaces. There must be no gaps in the bead. 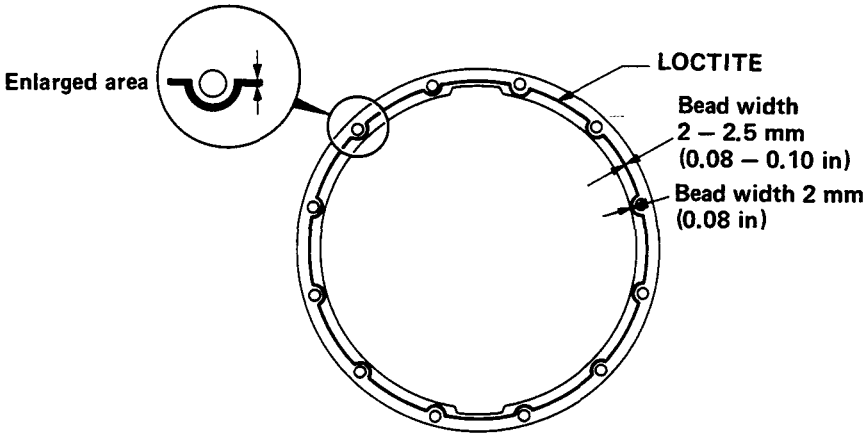 3. Tighten the bolts to the specified torque. 4. Let the joined parts set for at least thirty minutes.

0300

SERVICING

Servicing refers to general maintenance procedures to be performed by qualified service personnel.

0301, 03010101, 03010102

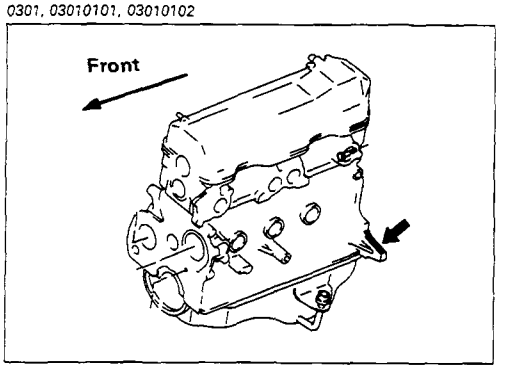

MODEL IDENTIFICATION

Engine Number

The engine number is stamped on the protrusion at the rear left hand side of the cylinder block.

0302, 030201

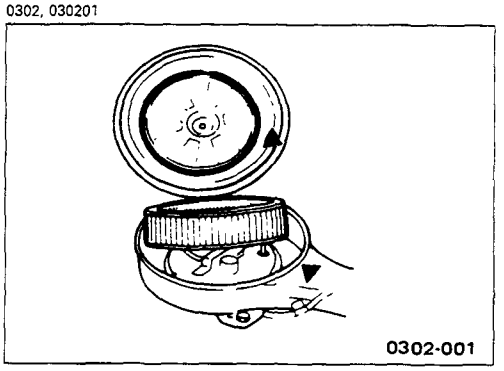

AIR CLEANER

Oil Wetted (Viscous) Type Paper Element

The air cleaner has an oil wetted paper element. No servicing is required until the replacement interval is reached.

Never attempt to clean the element, no matter how dirty it may appear. The element is designed to provide normal filtering efficiency until it becomes due for replacement.

030204A

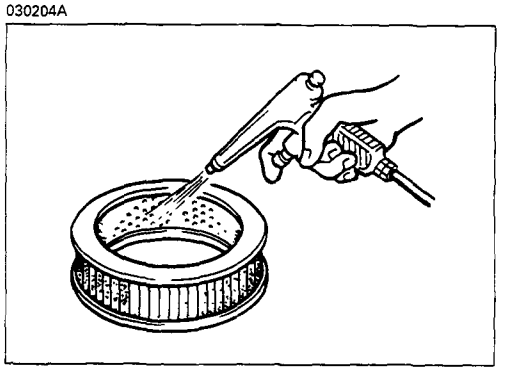

Dry Type Paper Element

Apply compressed air to the inside of the element as you rotate it with your hand. This will blow the dust free.

Compressed Air Pressure	kg/cm²(psi/kPa)
4–5 (56.9–71.1/392.3–490.3)	

030204B

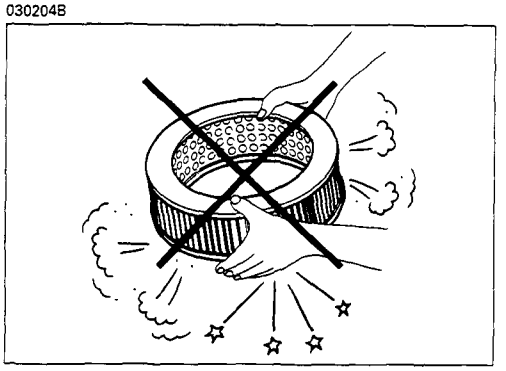

Do not bang the element against another object in an attempt to clean it. Damage to the element will result.

0303, 030301A

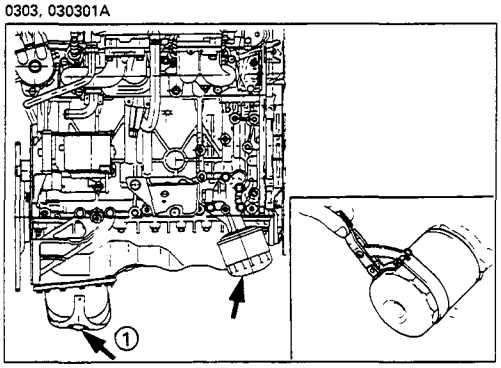

LUBRICATING SYSTEM

Oil Filter

Replacement Procedure

1. Loosen the drain plug ① to drain the engine oil.
2. Wait a few minutes and then retighten the drain plug with new gasket.
3. Loosen the used oil filter by turning it counterclockwise with the filter wrench.

030301B

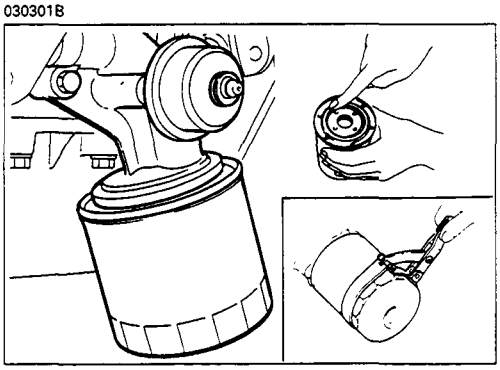

4. Clean the oil filter adapter fitting face.

   This will allow the new oil filter to seat properly.

5. Apply a light coat of engine oil to the O-ring.
6. Turn in the new oil filter until the filter O-ring is fitted against the sealing face.

7. Use the filter wrench to turn in the filter an additional 1 turn.

   Filter Wrench : 5-8840-0203-0

030301C

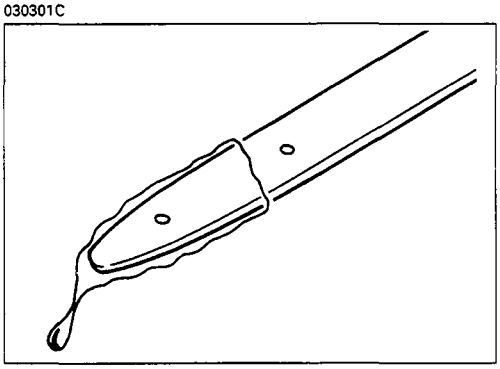

8. Check the engine oil level and replenish to the specified level if required.
9. Start the engine and check for oil leakage from the drain plug and main oil filter, then turn it off. After several minutes, recheck the engine oil level.

0304, 03040101A

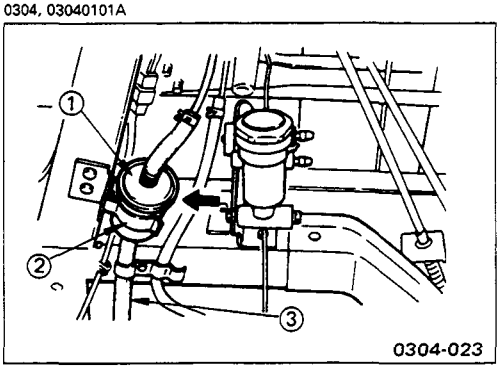

FUEL SYSTEM

Fuel Filter Replacement

1. Remove the fuel filter ① from the filter clip ②.
2. Disconnect the inlet and outlet fuel hoses ③ from the fuel filter.

03040101B

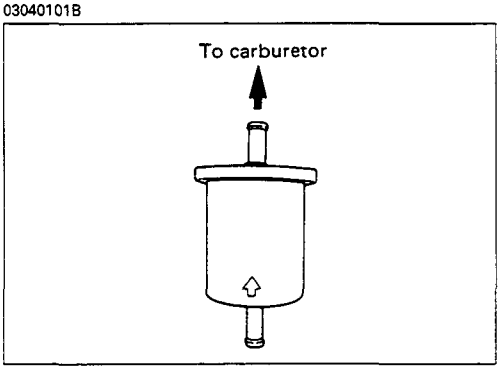

3. Connect the inlet and outlet fuel hoses to the new fuel filter.

   Be sure to connect the fuel hoses in their correct positions.
4. Install the fuel filter to the filter clip.
5. Start the engine.

   Check for fuel leakage from the fuel hoses.

030409, 03040901A

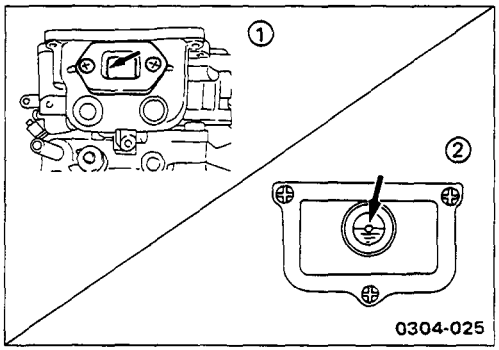

Carburetor

Float Level Inspection and Adjustment

Check the float level against the float level mark on the float chamber (Nikki) ①, and float level glass (Hitachi) ②.

If required, adjust the float level by carefully bending the float seat.

0305, 030501

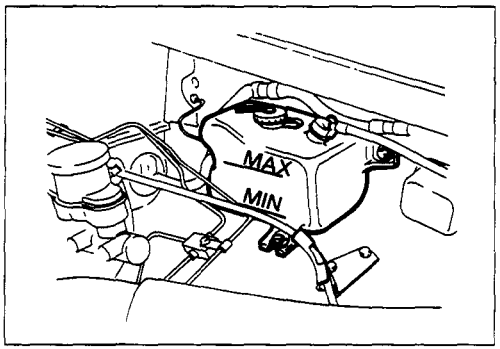

COOLING SYSTEM

Coolant Level

Check the coolant level and replenish the radiator surge tank as necessary.

If the coolant level falls below the "MIN" line, carefully check the cooling system for leakage. Then add enough coolant to bring the level up to the "MAX" line.

Note:

Do not overfill the reserve tank.

Remove the radiator filler cap only when absolutely necessary.

Always check the coolant level when the engine is cold.

Always refer to the chart at the left to determine the correct cooling water to antifreeze solution mixing ratio.

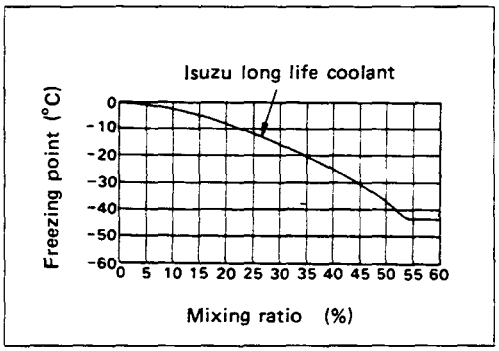

030502

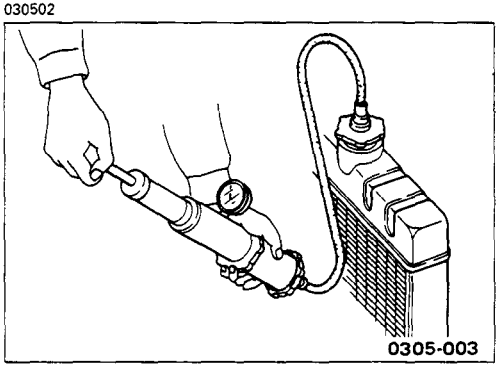

Cooling System Inspection

Install a radiator filler cap tester to the radiator. Apply testing pressure to the cooling system to check for leakage. The testing pressure must not exceed the specified pressure.

Testing Pressure	kg/cm^2 (psi/kPa)
	2 (28.45/196)

030503

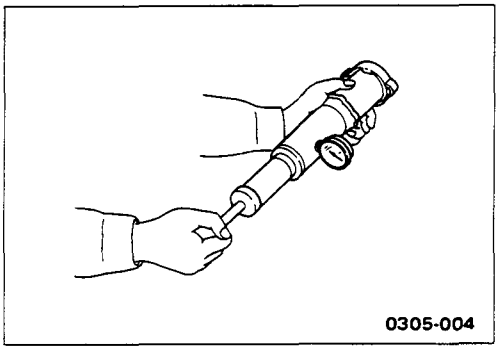

Radiator Cap Inspection

The radiator filler cap is designed to maintain coolant pressure in the cooling system at 1.05 kg/cm² (15 psi/ 103 kPa).

Check the radiator filler cap with a radiator filler cap tester. The radiator filler cap must be replaced if it fails to hold the specified pressure during the test procedure.

Radiator Filler Cap Pressure

Pressure Valve	kg/cm² (psi/kPa)
0.9 – 1.2 (12.8 – 17.1/88 – 118)	

Negative Valve (Reference)	kg/cm² (psi/kPa)
0.01 – 0.04 (0.14 – 0.57/0.98 – 3.90)	

03050402

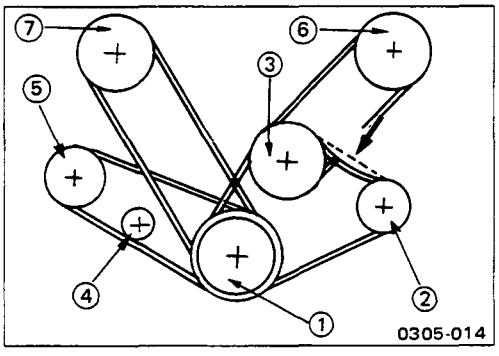

Drive Belt Adjustment

Check the drive belt tension.

Depress the drive belt mid-portion with a 10 kg (22 lb/ 98 N) force.

Drive Belt Deflection	mm(in)
Except power steering	10 (0.39)
Only power steering	14 (0.55)

Check the drive belt for cracking and other damage.

① Crankshaft pulley
② Alternator pulley
③ Cooling fan pulley
④ Compressor idler pulley
⑤ Compressor pulley
⑥ Air pump pulley
⑦ Power steering oil pump pulley

030505

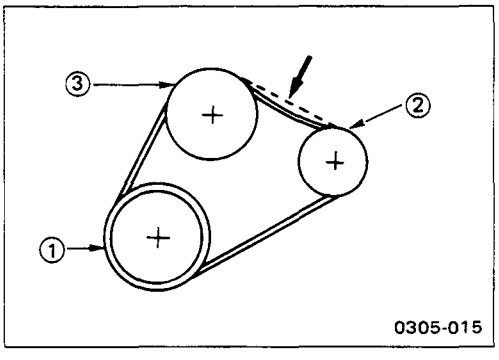

Cooling Fan Pulley Drive Belt

Fan belt tension is adjusted by moving the alternator.

Depress the drive belt mid-portion with a 10 kg (22 lb/ 98 N) force.

① Crankshaft pulley
② Alternator pulley
③ Cooling fan pulley

03050602

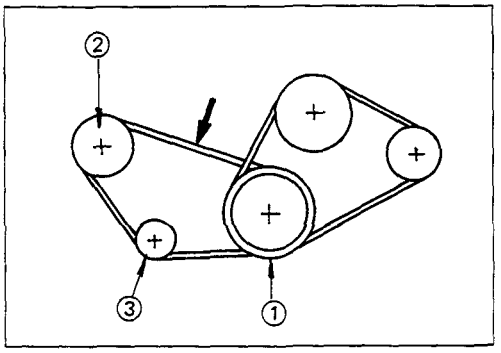

Compressor Pulley Drive Belt

Move the idler pulley to adjust the compressor drive belt tension.

Depress the drive belt mid-portion with a 10 kg (22 lb/ 98 N) force.

① Crankshaft pulley
② Compressor pulley
③ Idler pulley

03050702

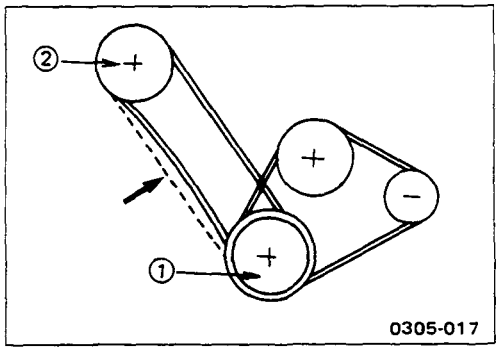

Power Steering Oil Pump Pulley Drive Belt

Move the oil pump to adjust the oil pump pulley drive belt tension.

Depress the drive belt mid-portion with a 10 kg (22 lb/ 98 N) force.

① Crankshaft pulley
② Oil pump pulley

030508

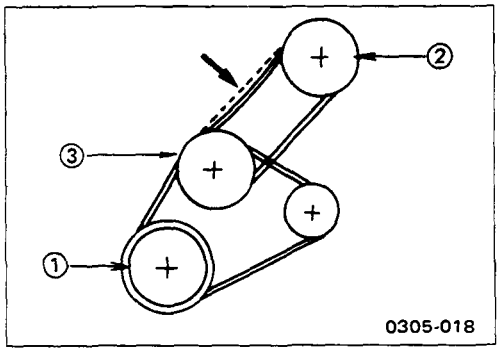

Air Pump Pulley Drive Belt

Move the air pump to adjust the air pump pulley drive belt tension.

① Crankshaft pulley
② Air pump pulley
③ Cooling fan pulley

0306

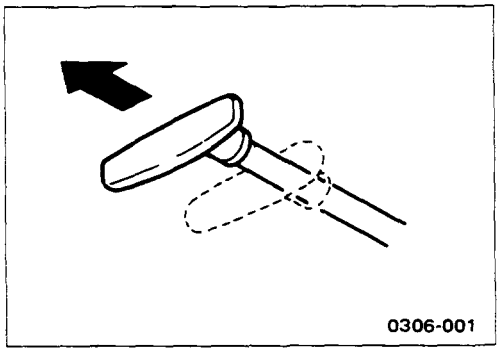

ENGINE CONTROL

Idling Speed and Mixture Adjustment Preparation

1. Set the parking brake and chock the drive wheels.
2. Place the transmission in neutral.
3. Start the engine and allow it to warm up.
4. Check that all the accessory switches are off and that the choke valve is fully open.
5. Set a tachometer to the engine.
6. Check the ignition timing and adjust it if required.

Ignition Timing (BTDC)	deg/rpm
From '91, switzerland & Sweden (4ZD1)	6/900
Other	6/800

03060102A, 03060102B

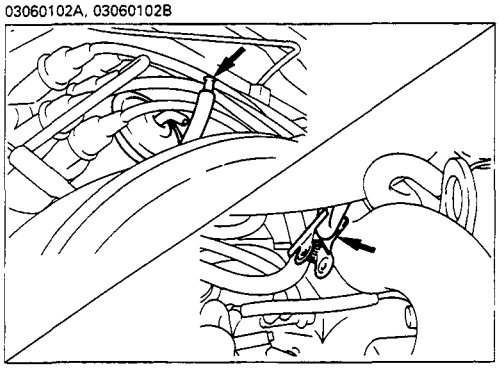

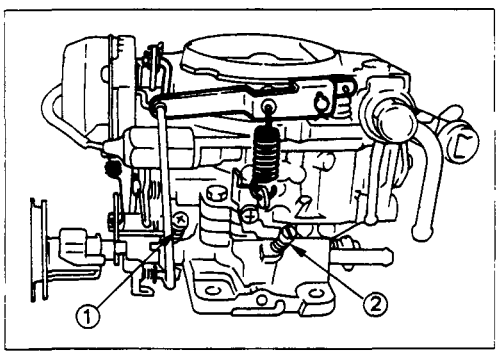

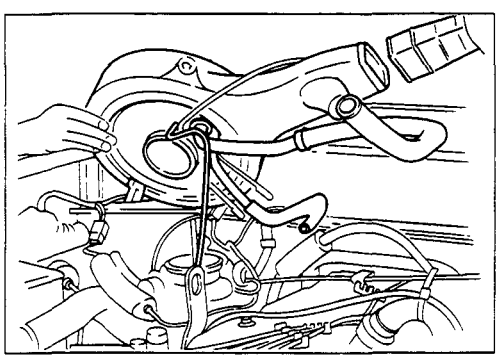

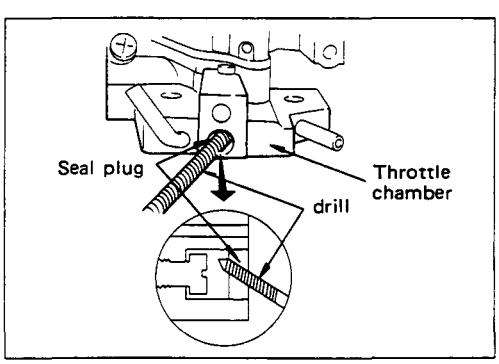

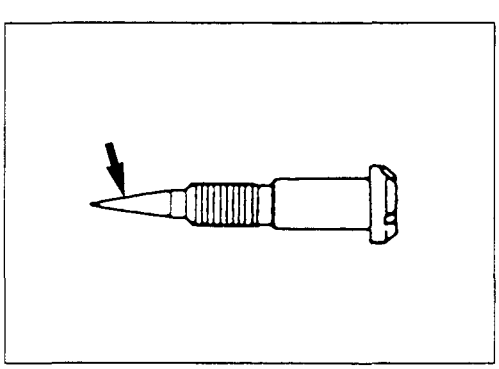

Idling Speed Adjustment (Nikki Carburetor)

1. Disconnect the distributor vacuum hose and plug the hose end.
2. Bend the attached rubber hose to close off the thermo valve vacuum line.
3. Set the throttle adjusting screw ① to the specified idling speed.
4. Turn the idle adjusting screw ② to peak the engine speed.

Idle screw adjuster (If required); 8-9421-6632-0

5. Reset the throttle adjusting screw to lower the idling speed to 20 rpm below the specified level.
6. Turn the idle adjusting screw counterclockwise to raise the idling speed to the specified level.

Engine Idling Speed	rpm
800	

7. Reconnect the distributor vacuum hose and the idle compensator vacuum hose to the carburetor after completing the adjustment procedure.

Idle Mixture Adjustment (Hitach carburetor) (Until '90 Swiss & Sweden, and From '92 Chili models)

1. Remove the air cleaner.
2. Tag each of the vacuum hoses leading to the carburetor.
3. Disconnect the harness connectors and the vacuum hoses at the carburetor.
4. Remove the carburetor assembly. Drill a hole in seal plug with proper tool.
5. Remove the idle adjusting screw from the throttle chamber.
6. Inspect the idle adjusting screw.

   If the adjusting screw head has been damaged by the drill, the screw must be replaced with a new one.

   If the adjusting screw taper is excessively worn or stepped, the screw must be replaced with a new one.

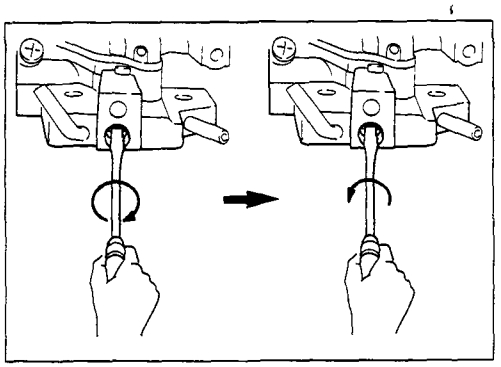

7. Reinstall the idle adjusting screw to the throttle chamber.
8. Fully screw the idle adjusting screw into the throttle chamber.

   Do not overtighten the screw.
9. Back off the idle adjusting screw 3 turns.

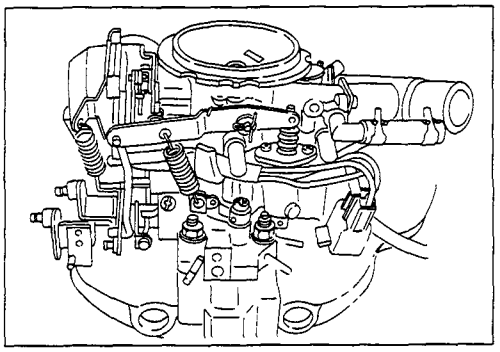

10. Reinstall the carburetor.
11. Reconnect the vacuum hoses and the harness connectors to the carburetor.

    Pay close attention to the tags applied at removal.

    Refer to "REMOVAL AND INSTALLATION" of the carburetor 6C.

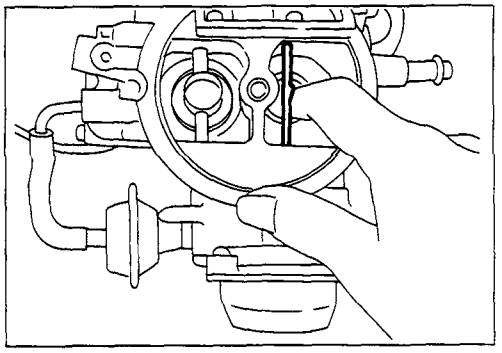

12. Reinstall the air cleaner.
13. Start the engine and allow it to idle until the cooling water reaches normal temperature.
14. Make sure that the choke valve is fully open.

    If the choke valve is not fully open, open it.

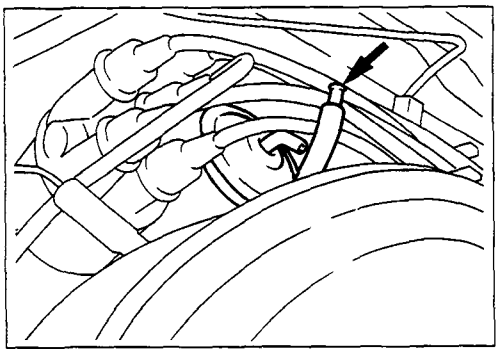

15. Make sure that the air conditioning system is off (if so equipped).
16. Move the front wheels to the straight ahead position (power steering equipped vehicle only).
17. Disconnect and plug the distributor line.

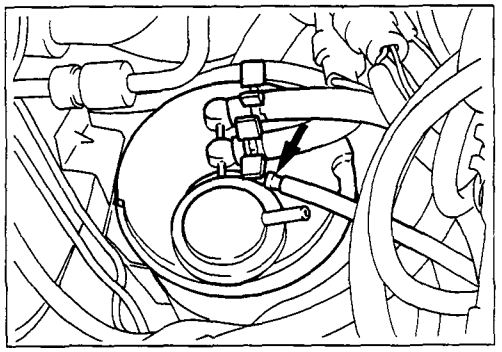

18. Disconnect and plug the canister purge line.

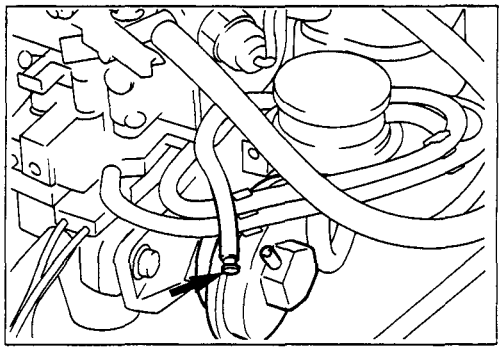

19. Disconnect and plug the EGR vacuum line.

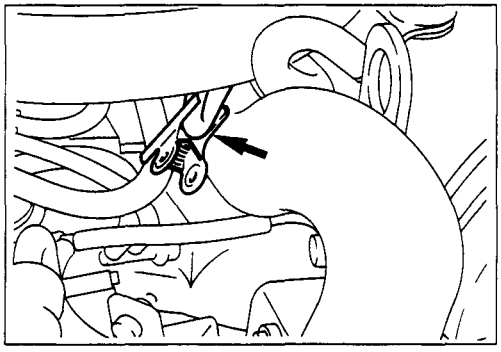

20. Bend the attached rubber hose to close off the idle compensator vacuum line.

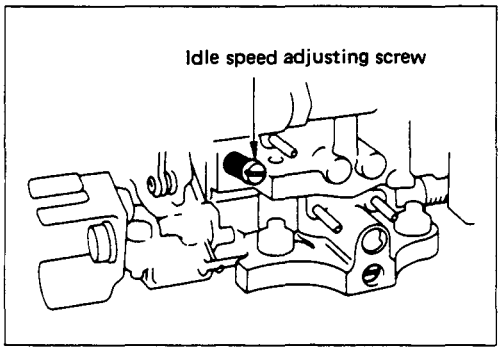

21. Use the throttle adjusting screw to adjust the idling.

Engine Idling Speed	rpm
800	

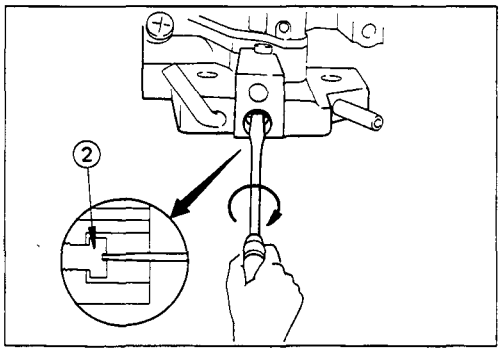

22. Adjust the setting of the idle adjusting screw ② to obtain the maximum speed.
23. Reset the throttle adjusting screw to 850 rpm.
24. Turn the idle adjusting screw clockwise (lean) until the engine idle speed is down to 800 rpm.

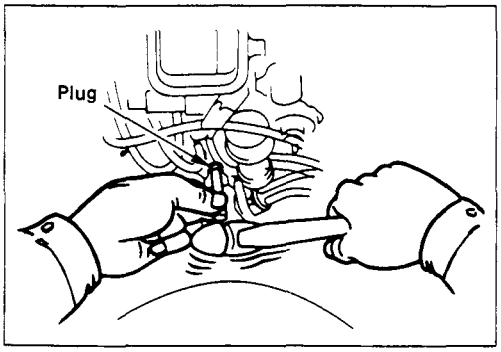

25. Remove the air cleaner.
26. Replace the idle adjusting screw plug.

    Tap the new plug in until it is flush with the carburetor surface.
27. Reinstall the air cleaner.

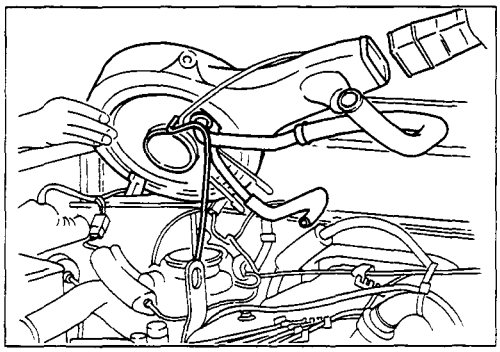

Idle Speed and Mixture Adjustment (Hitach carburetor)
(From '91 Swiss, Sweden & From '92 Germany models)

1. Remove the air cleaner.
2. Tag each of the vacuum hoses leading to the carburetor.
3. Disconnect the harness connectors and the vacuum hoses at the carburetor.

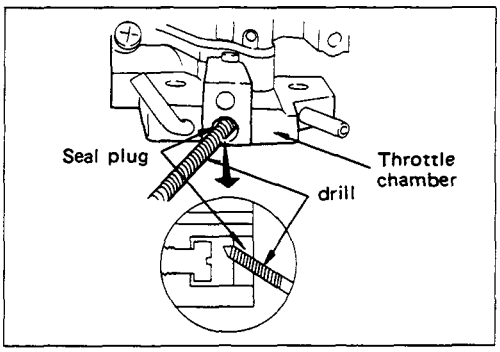

4. Remove the carburetor assembly. Drill a hole in seal plug with proper tool.

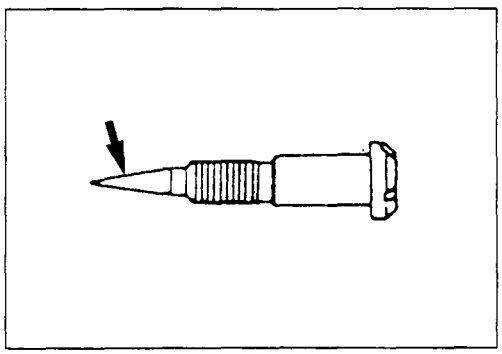

5. Remove the idle adjusting screw from the throttle chamber.
6. Inspect the idle adjusting screw.
   - If the adjusting screw head has been damaged by the drill, the screw must be replaced with a new one.
   - If the adjusting screw taper is excessively worn or stepped, the screw must be replaced with a new one.
7. Reinstall the idle adjusting screw to the throttle chamber.
8. Fully screw the idle adjusting screw into the throttle chamber.

   Do not overtighten the screw.
9. Back off the idle adjusting screw 3 turns.

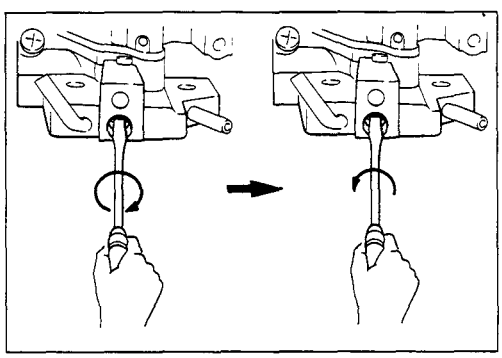

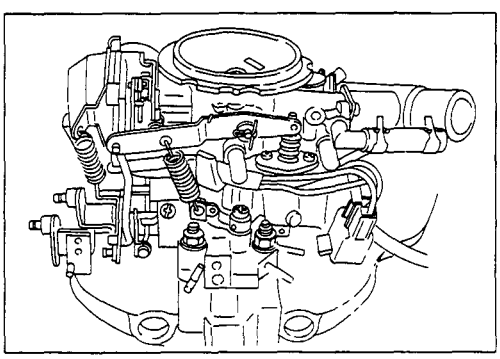

10. Reinstall the carburetor.
11. Reconnect the vacuum hoses and the harness connectors to the carburetor.

    Pay close attention to the tags applied at removal.

    Refer to "REMOVAL AND INSTALLATION" of the carburetor 6C.

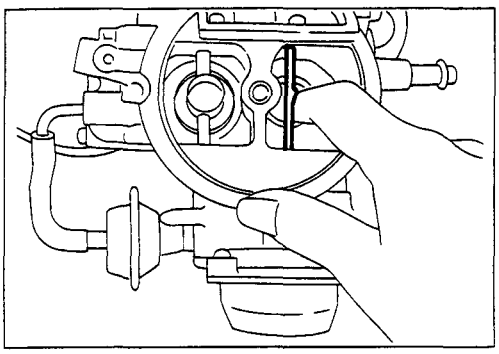

12. Reinstall the air cleaner.
13. Start the engine and allow it to idle until the cooling water reaches normal temperature.
14. Make sure that the choke valve is fully open.

    If the choke valve is not fully open, open it.

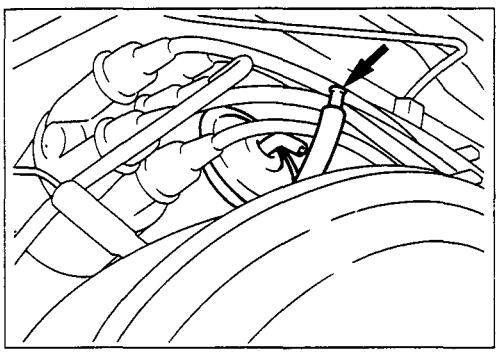

15. Make sure that the air conditioning system is off (if so equipped).
16. Move the front wheels to the straight ahead position (power steering equipped vehicle only).
17. Disconnect and plug the distributor line.

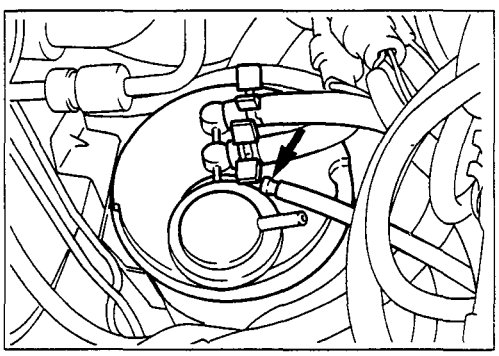

18. Disconnect and plug the canister purge line.

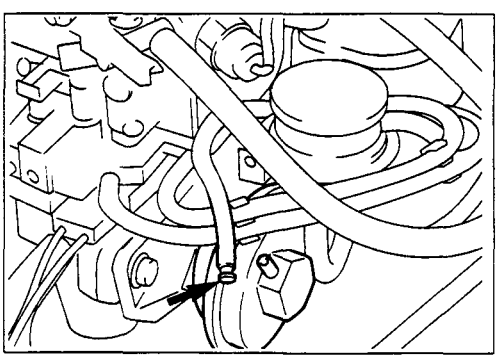

19. Disconnect and plug the EGR vacuum line.

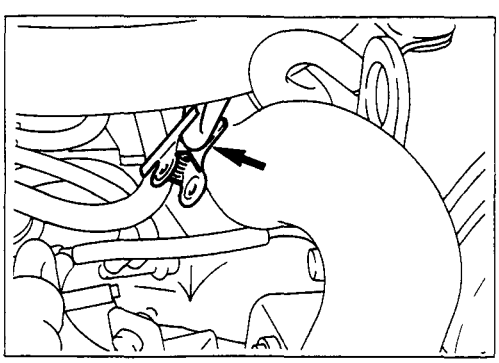

20. Bend the attached rubber hose to close off the idle compensator vacuum line.

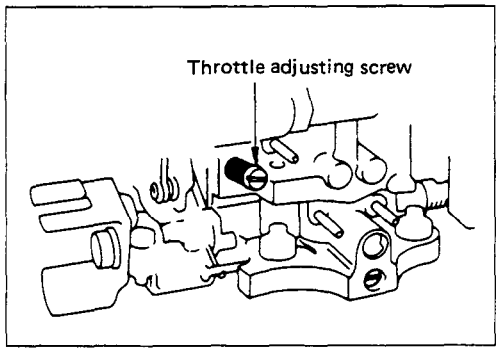

21. Use the throttle adjusting screw to adjust the idling.

Engine Idling Speed	rpm
900	

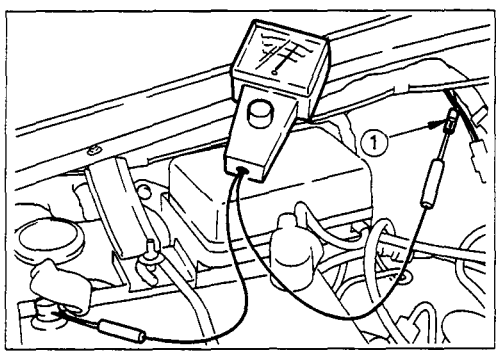

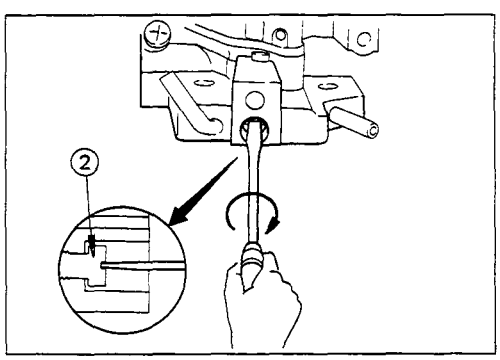

22. Use a dwell meter to measure the dwell.

    Connect the positive side of the meter to the monitor lead ① and the negative side of the meter to ground. After confirming dwell or duty to vary, adjust setting of idle adjusting screw ② to obtain an average dwell or duty as specified.

Dwell	Deg.
	Dwell Meter Reading (4-Cylinder Scale)
Average	36

The dwell reading specified is the average of the most constant vibration.

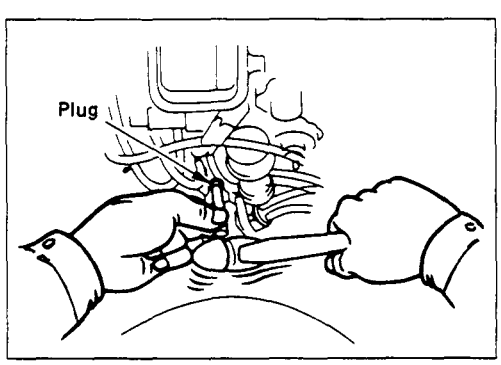

23. Use the throttle adjusting screw to reset the engine idling speed.

Engine Idling Speed	rpm
900	

24. Remove the air cleaner.
25. Replace the idle adjusting screw plug.

    Tap the new plug in until it is flush with the carburetor surface.
26. Reinstall the air cleaner.

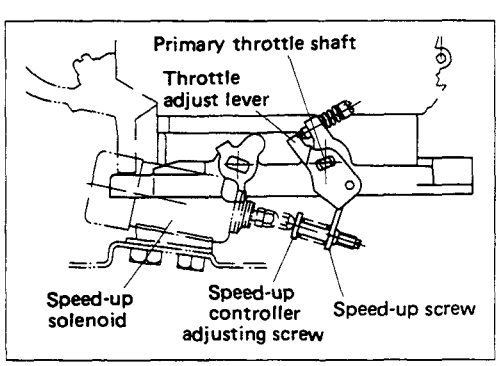

Idle Up Adjustment (If equipped)

1. Start the engine and allow it to warm up.
2. Turn "ON" airconditioner.
3. Turn the speed-up screw to 900 rpm.

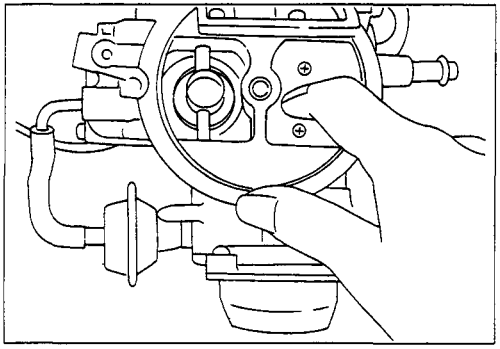

030608A

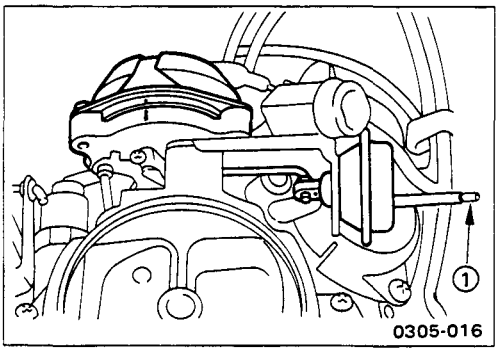

030608B

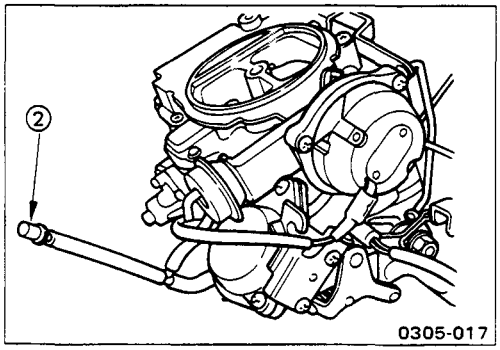

03060202

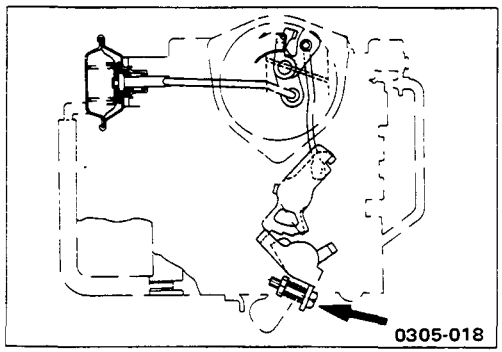

Fast Idling Speed Adjustment Preparation

1. Set the parking brake and chock the drive wheels.
2. Place the transmission in neutral.
3. Remove the air cleaner and while holding the throttle slightly open, push the choke the valve closed, and hold it closed as you release.
4. Disconnect the vacuum hose ① from the choke piston and plug the hose end.
5. Disconnect the EGR system thermal vacuum hose ② from the carburetor and plug the hose end.
6. Check that all the accessory switches are off.

Fast Idling Speed Adjustment

1. Start the engine and allow it to warm up.

   Do not depress the accelerator pedal.
2. Set a tachometer to the engine.
3. Check the fast idling speed.

Fast Idling Speed	rpm
2,700 – 3,000	

If the fast idling speed is outside the specified range, adjust it with the fast idle adjusting screw.

4. Reconnect the vacuum hose to the choke piston and install the air cleaner after completing the adjustment procedure.

030609, 03060901A

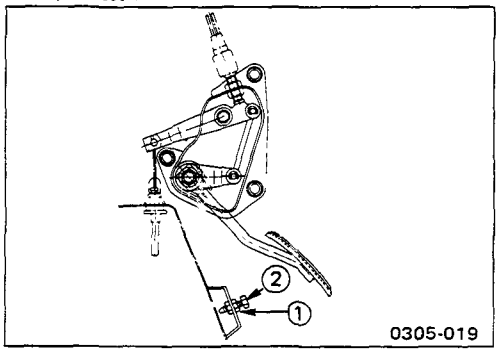

Engine Control Adjustment

Accelerator Pedal Adjustment

Adjustment of the accelerator pedal height is not required.

1. Loosen the pedal stopper bolt lock nut ①.
2. Tighten the pedal stopper bolt ② to prevent it from interfering with the accelerator pedal.

03060901B

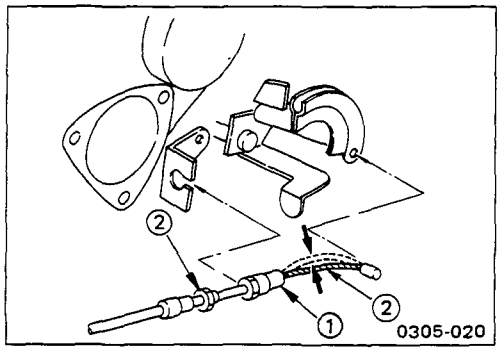

Engine Control Cable Adjustment

1. Fully close the throttle valve.
2. Turn the adjusting nut ① to adjust the engine control inner cable play ②.

Engine Control Inner Cable Play	mm(in)
Approximately 2 – 3 (0.079 – 0.120)	

03060901C

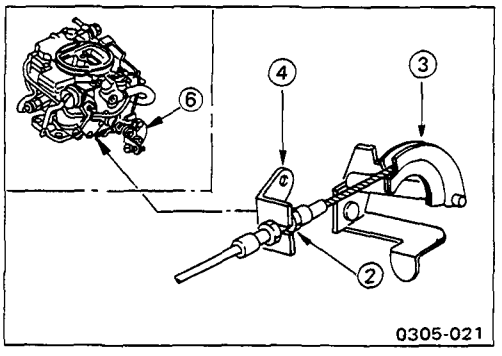

3. Connect the engine control cable to the throttle holder ③.
4. Install the engine control cable to the bracket ④.
5. Tighten the lock nut ②.

03060901D

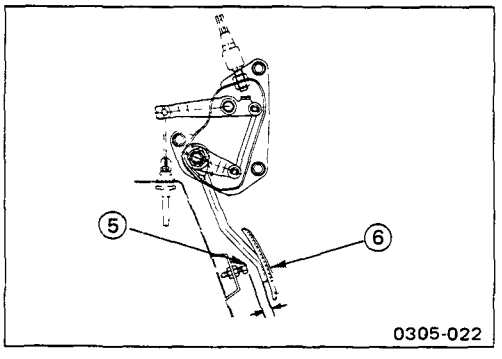

6. Fully open the throttle valve.
7. Adjust the clearance between the stopper bolt pad ⑤ and the accelerator pedal ⑥.

Accelerator Pedal and Bolt Pad Clearance	mm(in)
0 – 3 (0 – 0.12)	

8. Fully depress the accelerator pedal.

   Check that the throttle valve is fully open when the pedal is fully depressed.

0307, 030701

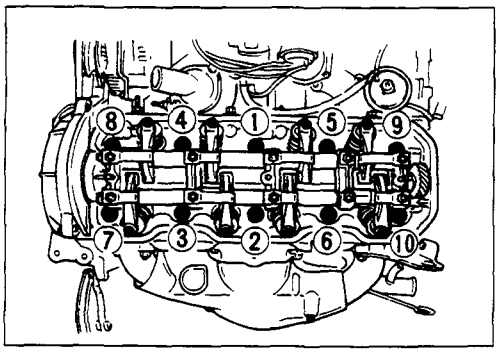

CYLINDER HEAD BOLT

Cylinder Head Bolt Tightening Torque Inspection

Use the torque wrench to check the cylinder head bolt tightening torque in the sequence shown in the illustration before adjusting the valve clearances.

Head Bolt Wrench: 9-8511-4209-0

Cylinder Head Bolt Torque	kg·m(ft.lbs/N·m)
10 ± 1 (72.3 ± 7.2/98.0 ± 9.8)	

0308B

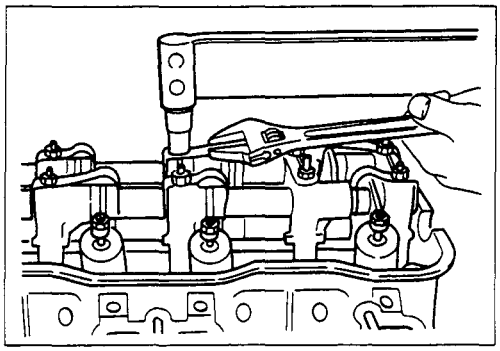

VALVE CLEARANCE ADJUSTMENT

1. Check the rocker arm shaft bracket nuts for looseness.

   Tighten any loose rocker arm shaft bracket nuts before adjusting the valve clearance.

Rocker Arm Shaft Bracket Nut Torque	kg·m(lb.ft/N·m)
2.2 ± 0.25 (16.0 ± 1.8/21.6 ± 2.5)	

0308A

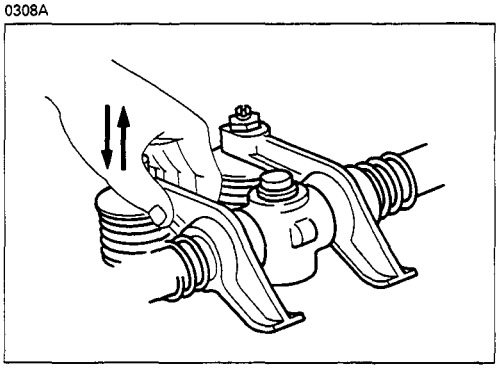

2. Bring the piston in either the No. 1 cylinder to TDC on the compression stroke by turning the crankshaft until the crankshaft pulley TDC line is aligned with the timing mark.

   If the No. 1 cylinder is at TDC, there will be play in the No. 1 cylinder valve rocker arms.

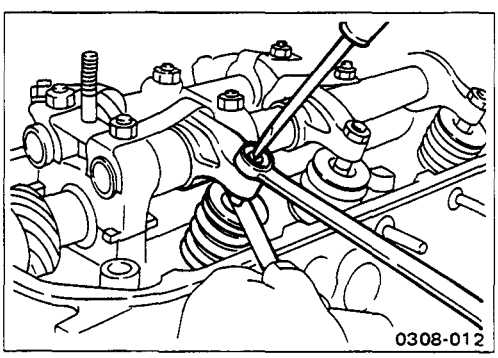

3. Adjust the valve clearances in the following manner using a feeler gauge.

   Feeler gauge should move with a very slight drag.

Valve Clearance		mm(in)
	At Cold	At Hot
Intake	0.15 (0.006)	0.20 (0.008)
Exhaust	0.25 (0.010)	0.30 (0.012)

030801D

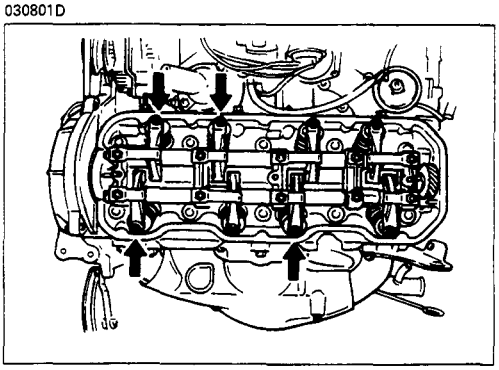

4. Adjust the clearance of the valve (arrowed).

030801E

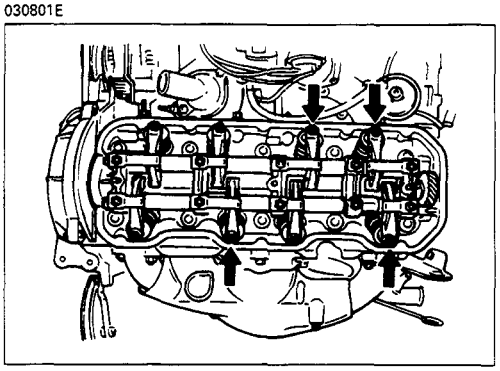

5. Turn the crankshaft one full turn (360 degrees) and adjust the clearances of the valves (arrowed).

0312, 031201A

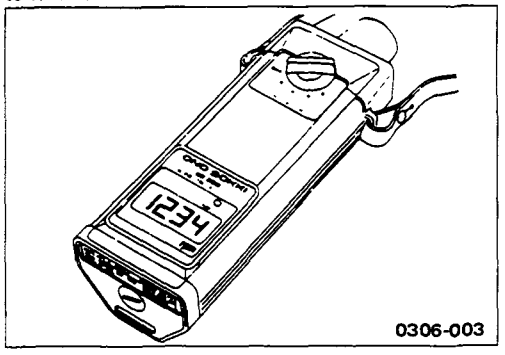

IGNITION TIMING

Ignition Timing Inspection

1. Start the engine and allow it to idle for warm up.
2. Set the engine tachometer.
3. Check that the engine is running stably at the specified idling speed.

   If the vehicle is equipped with an air conditioner, the air conditioner switch must be in the "OFF" position.

Engine Idling Speed	rpm
From '91, Switzerland, Sweden & From '92, Germany	900
Other	800

031201B

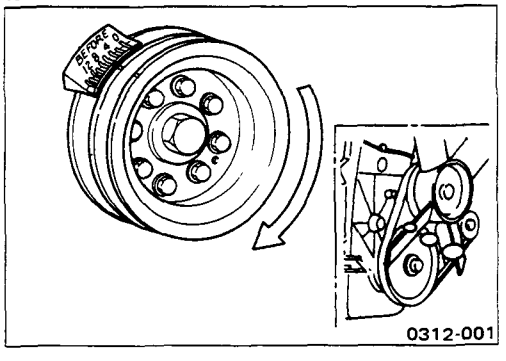

4. Disconnect the vacuum hose.
5. Attach the timing light cord to either the No. 1 or the No. 4 cylinder.
6. Aim the timing light at the crankshaft pulley notched line to check the ignition timing.

Ignition Timing (BTDC)	deg/rpm
From '91, Switzerland, Sweden & From '92, Germany	6/900
Other	6/800

If the ignition timing differs from the specification, adjust it by moving the distributor.

031201C

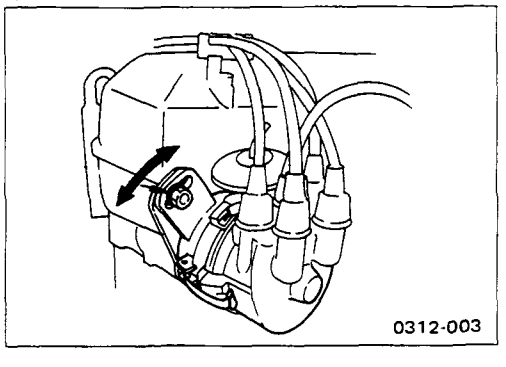

Ignition Timing Adjustment

1. Loosen the distributor fixing bolt.
2. Aim the timing light at the crankshaft pulley notched line to check the ignition timing.

   Moving the distributor to the left will advance the timing.

   Moving the distributor to the right will retard the timing.

031002A

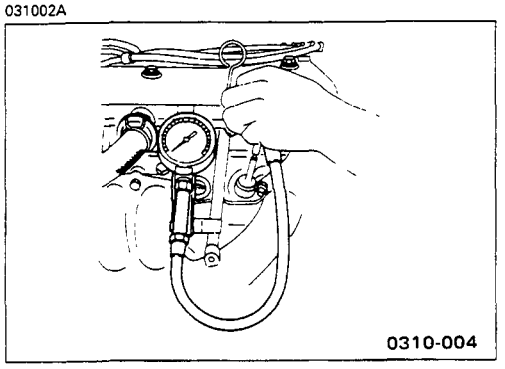

COMPRESSION PRESSURE MEASUREMENT

1. Start the engine and allow it to idle for warm up.
2. Set the engine tachometer.
3. Stop the engine.
4. Remove all of the spark plugs.
5. Engage the starter and check that the cranking speed is at least 300 rpm.

   If the cranking speed is less than 300 rpm, the battery must be replaced.
6. Set a compression gauge to the No. 1 cylinder spark plug hole.
7. Turn the engine over with the starter motor and take the compression reading.

Compression Pressure kg/cm^2(psi/kPa) at 300 rpm

Standard	Limit
12.0 (170.6/1,177.2)	8.0 (113.7/784.5)

8. Repeat the procedure (Steps 6 and 7) for the remaining cylinders.

0313

IGNITION SYSTEM

If a problem in the ignition system is believed to be the cause of engine trouble, perform the following checks and make the required adjustments, repairs, and part replacements.

031303

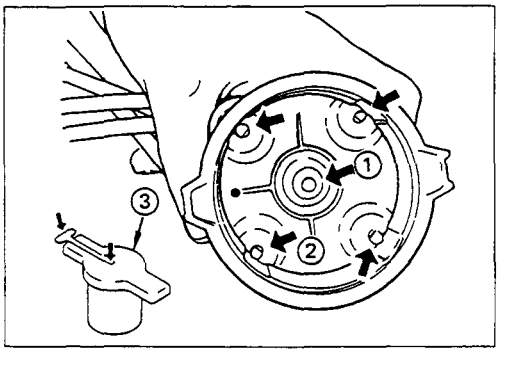

Distributor

1. Distributor Cap and Rotor
   Remove the distributor cap and check the following:
   1) Check the center electrode ① and the side electrode ② for burning and corrosion.
   2) Check the rotor ③ for excessive wear and burning.

   Replace the parts as required.

0313030B

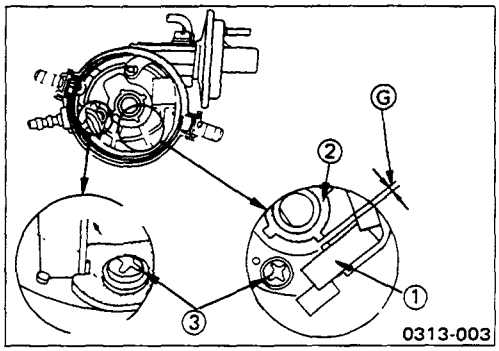

2. Air Gap

   Use a feeler gauge to measure the clearance between the signal generator ① and the distributor cam ②.

   If the measured value is outside the specified value, adjust the air gap by loosening the two screws ③ and moving the bracket.

Air Gap Ⓖ	mm(in)
0.2 – 0.4 (0.008 – 0.016)	

031304

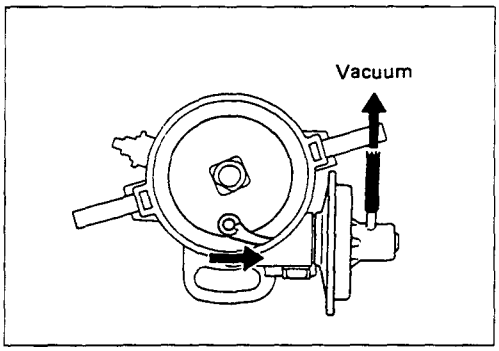

Vacuum Adavancer

1. Disconnect the vacuum hose from the vacuum advancer.
2. Connect a vacuum pump to the vacuum advancer diaphragm.
3. Apply a vacuum and check that the vacuum advancer moves.
   If the vacuum advancer does not move, repair or replace as necessary.

031305

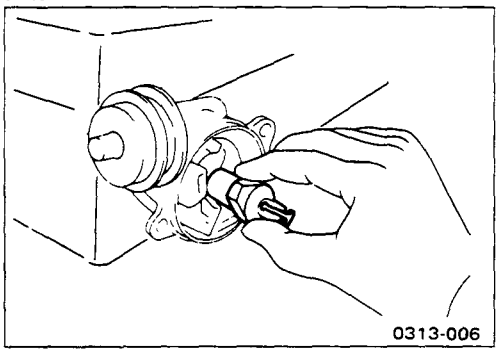

Governor

1. Check the rotor shaft for excessive looseness.

   If the shaft is excessively loose, the governor is defective and must be replaced.
2. Turn the rotor shaft clockwise 1/4 of a turn and release it.

   The rotor shaft should spring back.

   If the shaft does not spring back, the governor is defective and must be replaced.

031306

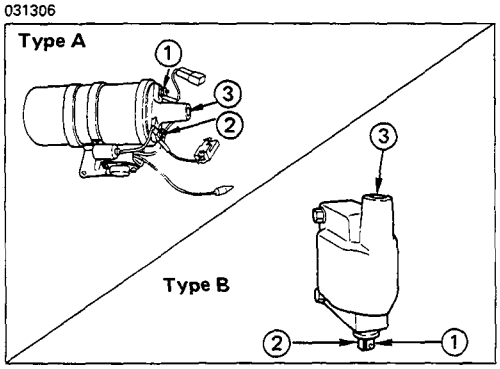

Ignition Coil

Use a circuit tester to measure the resistance of the primary coil and the secondary coil.

If either of the measured values is outside the specified value, the ignition coil must be replaced.

Ignition Coil Resistance

	Type A	Type B
Primary Coil ① – ②	1.1 – 1.4Ω	1.2 – 1.4Ω
Secondary Coil ① – ③	12.2 – 14.9 Ω	8.6 – 13.0 Ω

0314

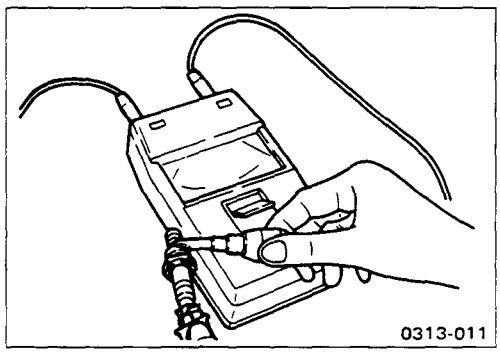

SPARK PLUG

Insulation Resistance Inspection

Use an ohmmeter to measure the insulation resistance.

If the measured value is less than the specified value, the spark plug must be replaced.

Insulation Resistance	MΩ
More than 5	

031401B

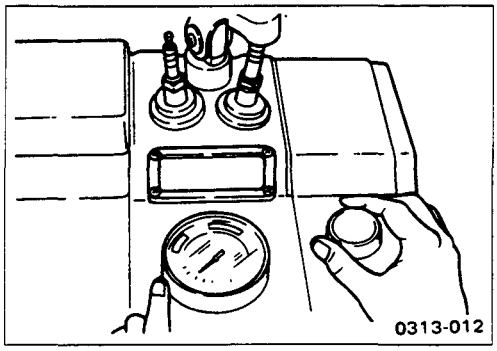

Insulation Resistance Inspection (Using a Spark Plug Tester)

Use the spark plug tester to check for excessive carbon deposits, cracked insulation resulting in short circuiting, and terminal abrasion resulting in voltage surging.

If any of these conditions are discovered, the spark plug must be replaced.

031401C

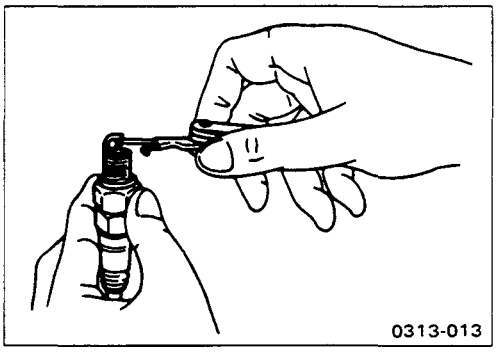

Spark Plug Gap Adjustment

Measure the spark plug gap and inspect the spark plugs.

Adjust the spark plug gap if required.

Spark Plug Gap	mm(in)
Without catalytic converter vehicle	0.7–0.8 (0.028–0.031)
With catalytic converter vehicle	1.0–1.1 (0.040–0.043)

HIGH TENSION CABLE

0315A

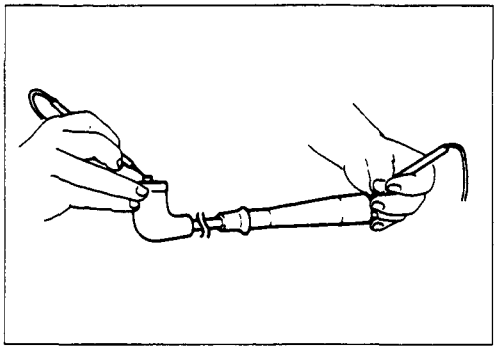

1. Check the cable for broken insulation.

   If there is broken insulation, the cable must be replaced.

2. Check the terminals for corrosion and looseness.

   If the terminals are corroded or loose, the cable must be replaced.

0315B

3. Measure the cable resistance.

   If the measured resistance deviates from the specified value, the cable must be replaced.

Cable Resistance	KΩ/m
9.6 – 22.4	

Note:

The cable contains a synthetic conductor which is easily damaged.

Never stretch or kink the cable.

Never stick a needle or the pointed end of a probe into the cable during a timing check. An increase in resistance will occur at that point, causing the cable to burn.

050102A

GENERAL DESCRIPTION

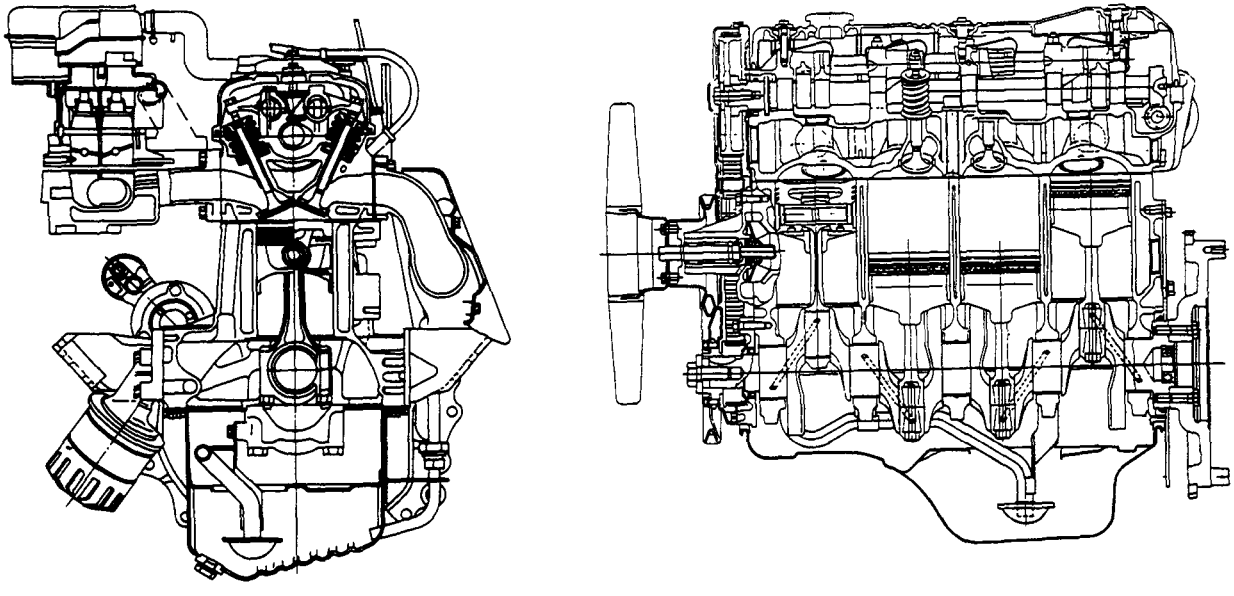

050100-003

050102B, 050102C

The 4Z Series model engine, designed to meet the strictest emission control regulations, is used on TFR and TFS vehicles.

This engine features aluminum alloy cylinder heads and hemispherical combustion chambers. The cross-flow intake and exhaust port valves have a "V" configuration.

A one-piece cast iron cylinder body is used. The oil pump and the water pump are built into the upper front of the cylinder body.

The crankshaft is supported by five bearings for optimum stiffness. The counter weights are forged as part of the crankshaft.

The timing train consists of the timing belt and the single overhead camshaft (SOHC).

050201

REMOVAL AND INSTALLATION

Read this Section carefully before performing any removal and installation procedure. This Section gives you important points as well as the order of operation. Be sure that you understand everything in this Section before you begin.

Important Operations – Removal

- Carefully remove the piping, hoses, wiring harness connectors, engine control cables, and control rods from the engine.
- Remove the clutch control line, the back up light switch connector, and the speedometer cable from the transmission.

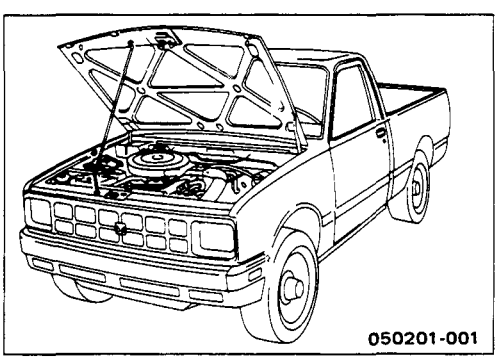

Engine and Transmission

The engine and transmission must be removed from the engine separately.

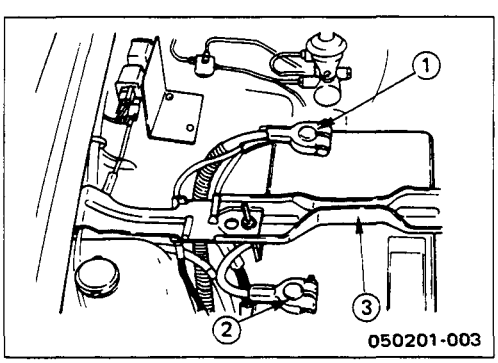

Battery

1. Disconnect the battery cable ① and the grounding cable ② from the battery terminals.
2. Remove the battery clamp ③.

   Take care not to accidentally short the battery with the spanner or some other tool.
3. Remove the battery.
4. Disconnect the battery cable at the starter motor and the ground cable at the cylinder body.

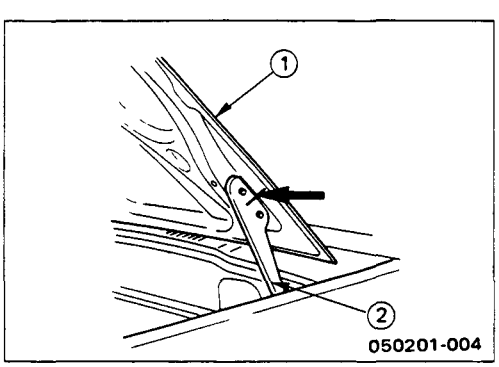

Engine Hood

Apply setting marks to the engine hood ① and the engine hood hinges ② before removing the engine hood.

This will facilitate installation of the engine hood to its original position.

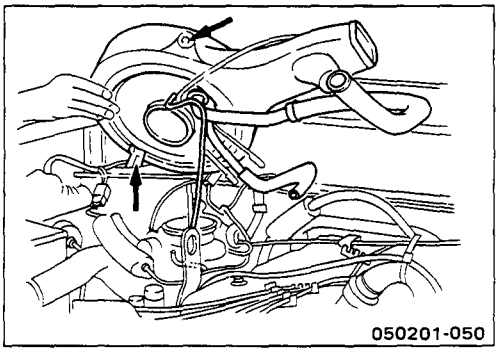

Air Cleaner

Remove the air cleaner from the engine.

Note:

Cover the air cleaner intake port to prevent the entry of foreign material.

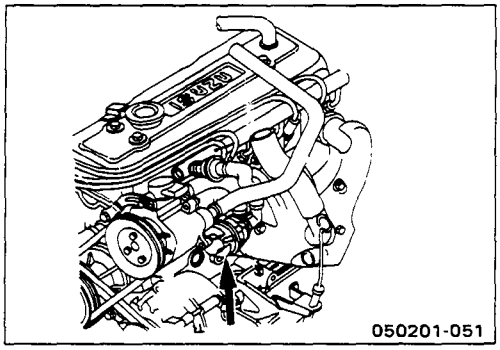

Coolant

Remove the coolant drain plug (at the lower left of the engine) and the radiator drain plug.

Allow the engine coolant to drain completely.

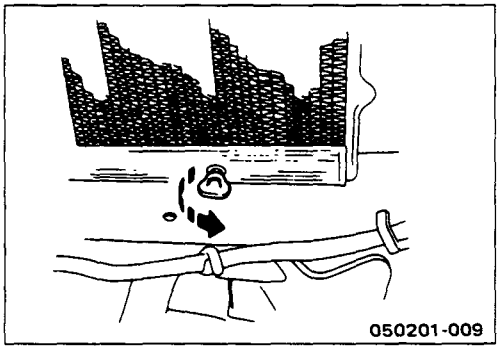

If long life coolant is used, drain the coolant into a clean plastic connector for reuse.

Radiator

1. Remove the radiator grill from the deflector panel.
2. Remove the radiator undercover from the sidemembers (For 4 × 4).
3. Disconnect the radiator upper and lower hoses from the engine side.
4. Remove the radiator fan shroud and the cooling fan.
5. Remove the radiator.

   Be careful not to damage the radiator core.

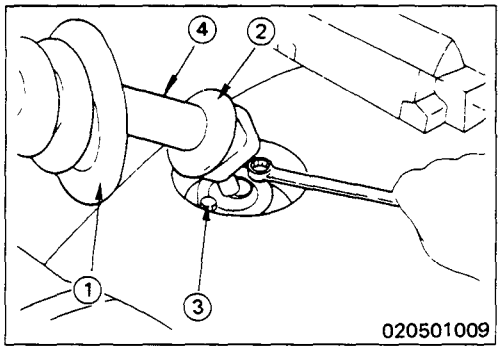

Gear Shift Lever

1. Place the gear shift lever in the neutral position.
2. Remove the front console from the floor panel.
3. Pull the gear shift lever grommet ① and the dust cover ② to the top of the gear shift lever.
4. Remove the gear shift lever cover bolt ③.
5. Remove the gear shift lever ④.

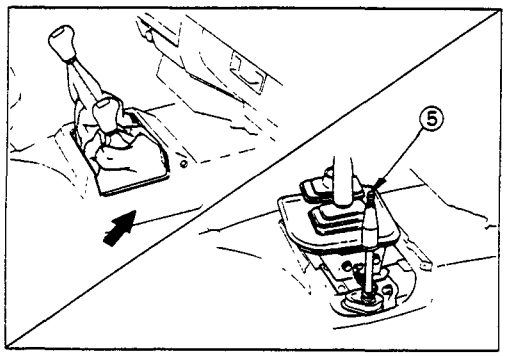

6. Remove the change lever hole cover ⑤ or the center console from the front floor.
7. Remove the quadrant box ⑥ from the transmission rear cover.

Note:

Cover the quadrant box hole to prevent the entry of foreign material into the transmission.

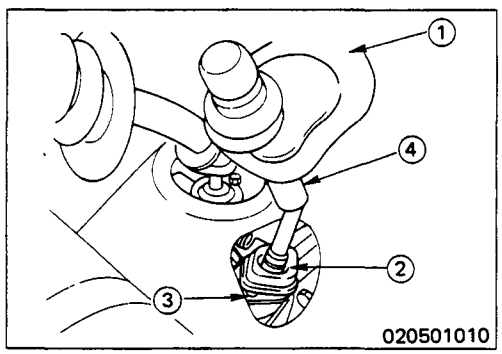

Transfer Change Lever (For 4 ×4)

Perform this procedure after removing the gear shift lever.

1. Place the transfer change lever in the "H" position.
2. Pull the transfer change lever grommet ① and the dust cover ② to the top of the transfer change lever.
3. Remove the retainer bolts ③.
4. Remove the transfer change lever ④ along with the retainer and ball seat cover.

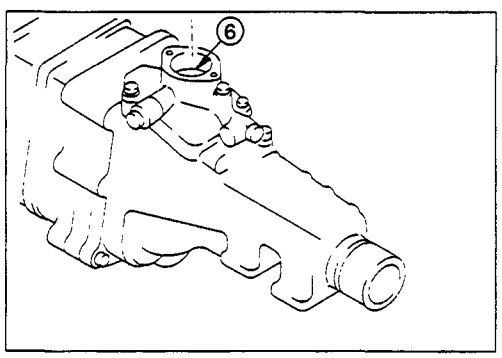

5. Remove the change lever hole cover ⑤ or the center console from the front floor.
6. Remove the quadrant box ⑥ from the transfer case adapter.

Note:

Cover the quadrant box hole and the transfer change lever hole to prevent the entry of foreign material into the transmission.

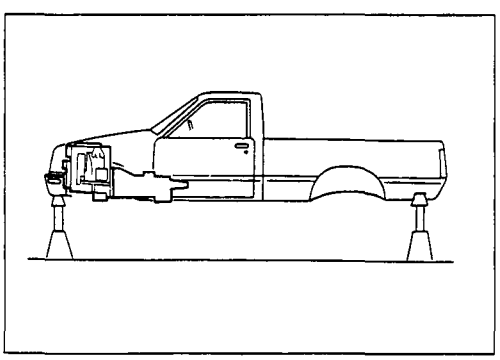

05020110

Lifting the Vehicle

1. Jack up the vehicle.
2. Place chassis stands at the front and the rear of the vehicle.
3. Remove the wheels from the chassis.

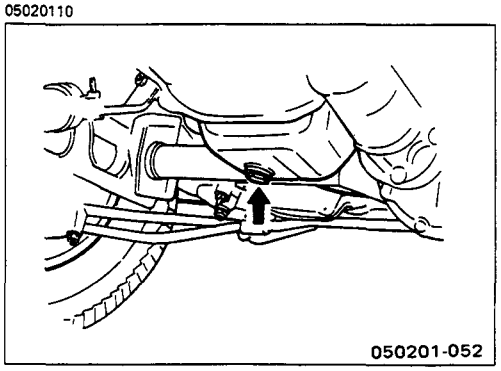

Engine Oil Draining

Remove the oil pan drain plug to drain the engine oil.

Do this while the engine is hot.

Do not forget to reinstall the drain plug after draining the engine oil.

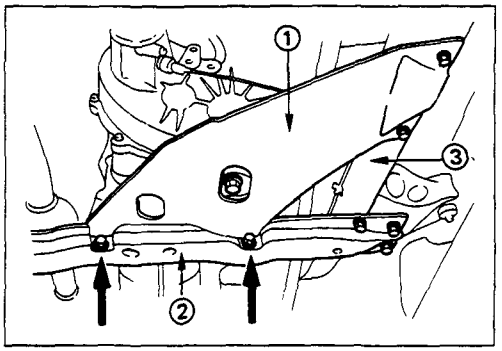

Transfer Case Protector

Remove the transfer case protector ① from the transmission mounting member ② and the side member ③.

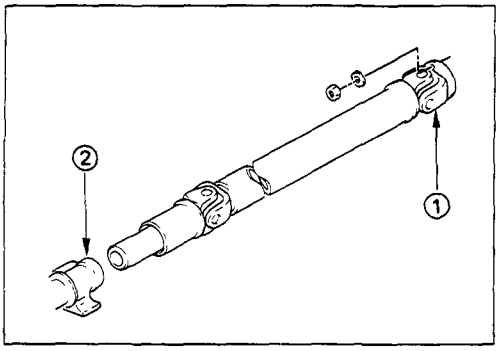

Rear Propeller Shaft (Single Shaft Type)

1. Remove the propeller shaft flange yoke at the drive pinion side ①.
2. Remove the propeller shaft from the transmission main shaft spline ②.

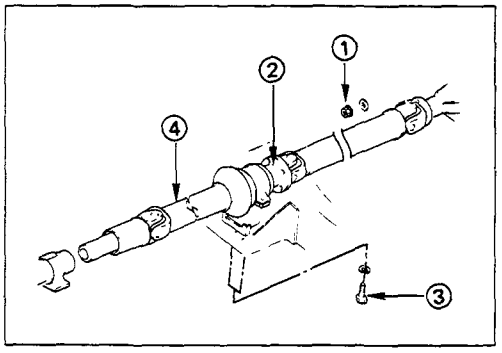

Rear Propeller Shaft (Dual Shaft Type)

1. Apply setting marks to the center coupling flange yoke and the 2nd propeller shaft flange yoke.

   This will prevent mispositioning during the installation procedure.
2. Remove the 2nd propeller shaft flange yoke bolts at the drive pinion side ①.
3. Remove the 2nd propeller shaft flange yoke bolts ② at the center coupling side.
4. Remove the center bearing retainer bolts ③.
5. Remove the 1st propeller shaft ④ with the center bearing.

   Pull the 1st propeller shaft toward the rear of the vehicle until the spline yoke is free of the transmission main shaft.

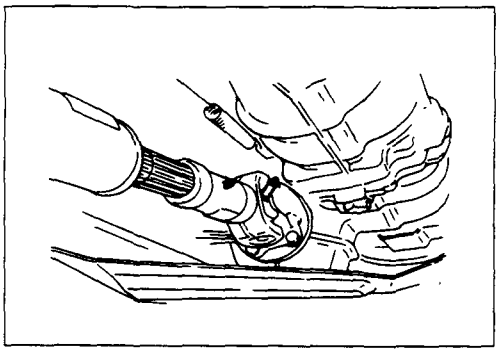

Front Propeller Shaft (For 4 × 4)

Remove the splined yoke flange bolt at the transfer case side.

Do not allow the splined yoke to fall away from the front propeller shaft.

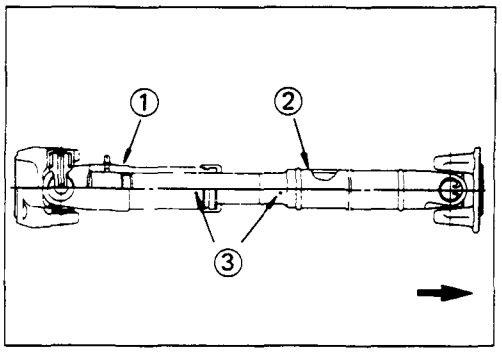

If the splined yoke should fall away from the front propeller shaft, align the setting marks ③ on the splined yoke ① and the front propeller shaft ② to reassemble the two parts.

The setting marks are punched circles approximately 3 mm (0.12 in) in diameter.

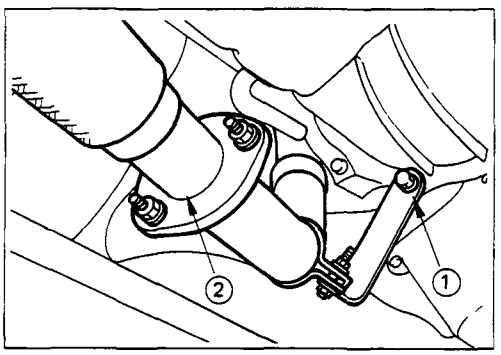

Exhaust Pipe

1. Remove the exhaust pipe bracket ① from the transmission case.
2. Disconnect the front exhaust pipe from the exhaust manifold and the 2nd exhaust pipe ②.

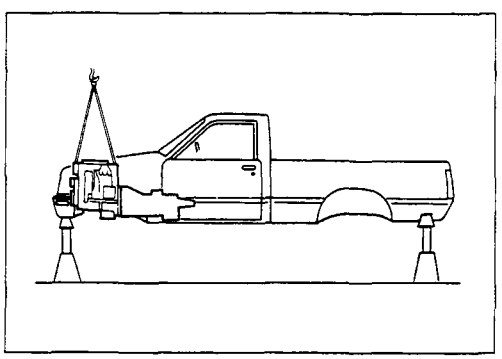

Engine Lifting Hanger

1. Attach the engine lifting hanger to the rear portion of the exhaust manifold.
2. Attach the lifting wire to both ends of the engine lifting hanger.

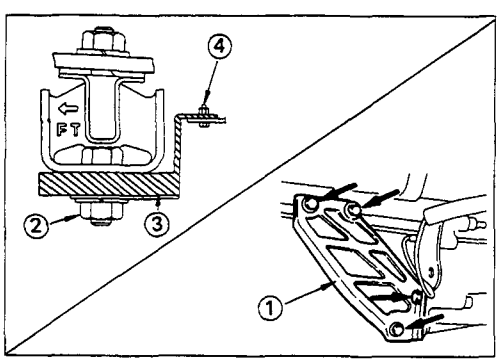

Transmission (For 4 × 2)

1. Support the transmission with a transmission jack.
2. Disconnect the engine stiffener ① from the cylinder body and the engine rear plate.
3. Remove the engine rear mounting rubber nuts ② from the mounting rubber bracket ③.
4. Loosen the mounting rubber bracket bolts ④.

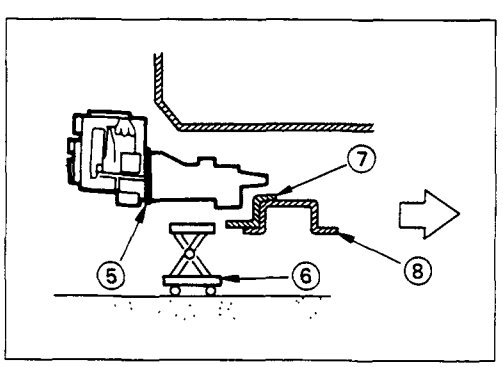

5. Remove the transmission from the engine.

   The removal of the transmission will require the cooperative efforts of two mechanics.

   1) Remove the transmission nuts and bolts ⑤ from the engine rear plate.
   2) Operate the transmission jack ⑥ to slightly raise the transmission.
   3) Remove the rear mounting rubber bracket ⑦ from the mounting rubber from the No. 3 crossmember ⑧.

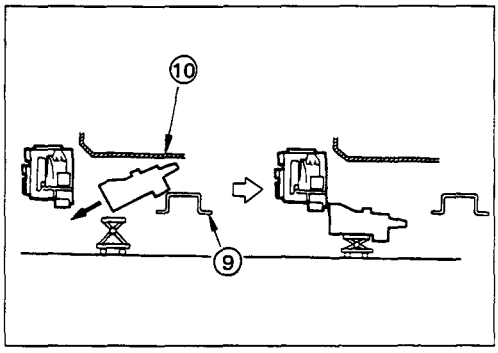

4) Manually move the transmission as far as possible toward the rear of the vehicle (into the space between the No. 3 crossmember ⑨ and the floor panel ⑩.

5) Lower the clutch housing end of the transmission toward the transmission jack.

   The rear of the transmission is supported by the No. 3 crossmember at this time.

6) Firmly grasp the transmission rear cover (1st mechanic).

   Raise the transmission jack toward the transmission (2nd mechanic).

   Carefully lower the transmission onto the transmission jack.

   The transmission must be centered on the transmission jack.

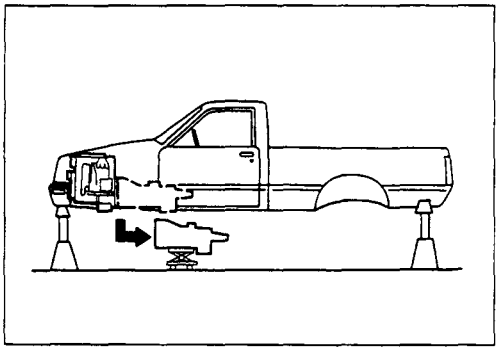

6. Carefully pull the transmission jack with the transmission from beneath the vehicle.

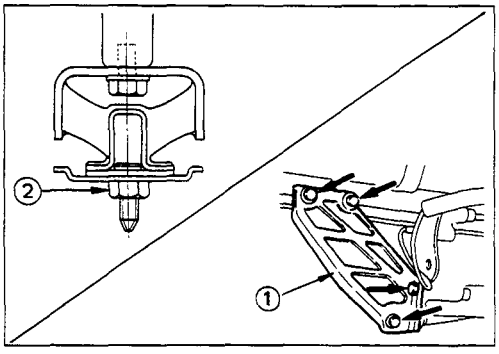

Transmission with Transfer Case (For 4 × 4)

1. Support the transmission with a transmission jack.
2. Disconnect the engine stiffener ① from the cylinder body and the engine rear plate.
3. Remove the engine rear mounting nuts ②.

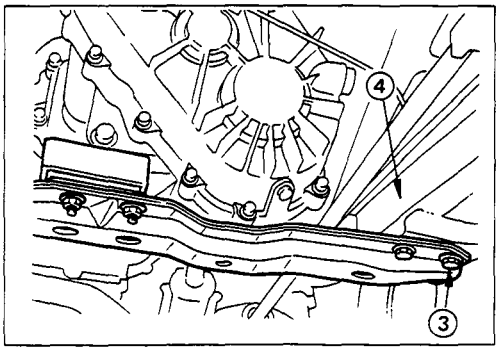

4. Loosen the mounting member bolts ③.
5. Remove the mounting member from the sidemembers ④.

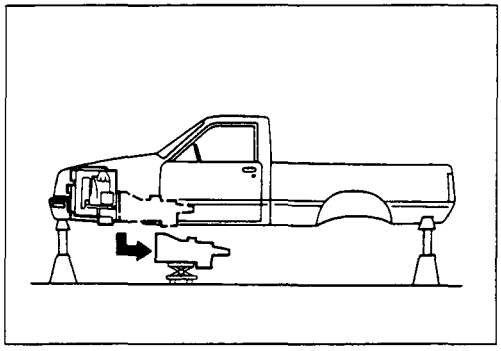

6. Remove the transmission with the transfer case from the engine.
   1) Remove the transmission nuts and bolts from the engine rear plate.
   2) Carefully pull the transmission with the transmission jack toward the rear of the vehicle.
   3) Operate the transmission jack to slowly lower the transmission.

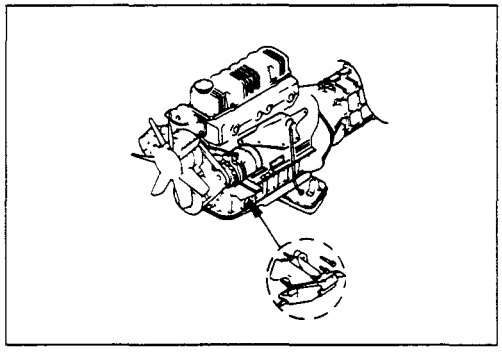

Engine

1. Remove the engine mounting rubber nuts attaching the mounting rubbers to the sidimembers.

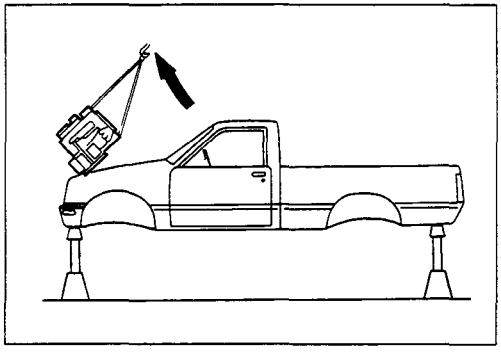

2. Operate the hoist to slightly raise the engine.

   The front of the engine should be held slightly higher than the rear.

   Be careful not to damage the brake pipe and the fuel pipe.
3. Continue to slowly raise the engine from the engine compartment.

   Hold the front of the engine higher than the rear.

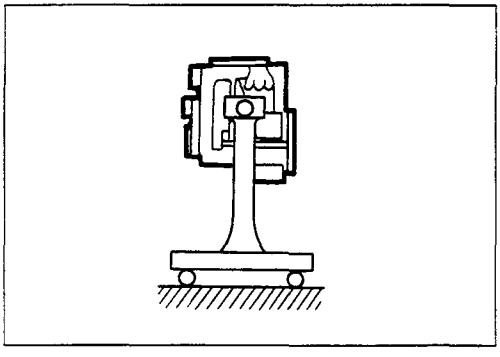

4. Place the engine on an engine stand.

Important Operations — Installation

Follow the removal procedure in the reverse order to perform the installation procedure. Pay careful attention to the important points during the installation procedure.

0502020201

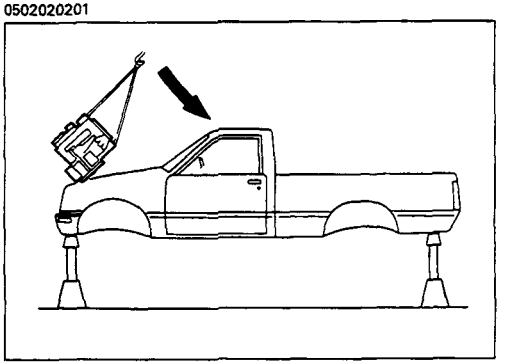

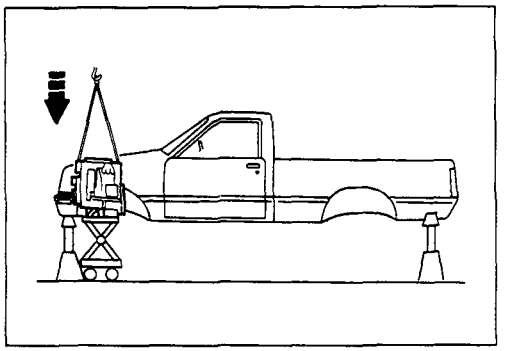

Engine

1. Attach a lifting wire to the engine lifting hangers.
2. Operate the hoist to position the engine above the engine compartment.

   The front of the engine should be held slightly higher than the rear.
3. Lower the engine slowly into the engine compartment.

   Be careful not to damage the brake pipe, the fuel pipe, and the air breather.
4. Support the oil pan with a jack.
5. Temporarily tighten the engine mounting rubber nuts.

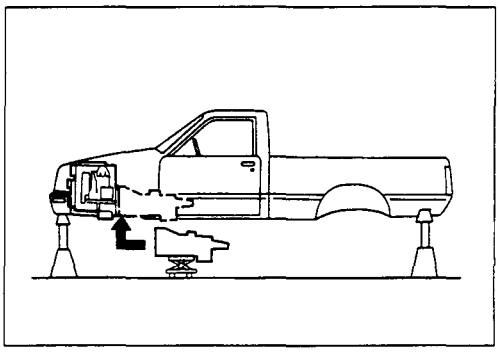

Transmission (For 4 ×2)

1. Apply a thin coat of molybdenum disulfide grease to the top gear shaft spline.
2. Place the transmission with the mounting rubbers on a transmission jack.
3. Carefully move the transmission jack and transmission into position behind the engine.

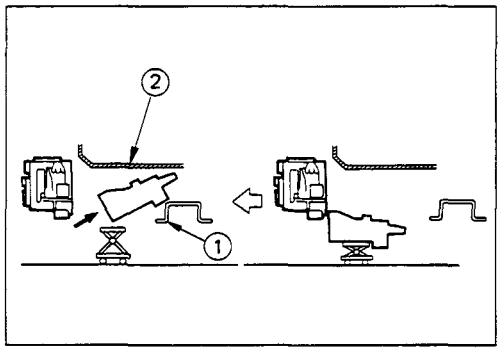

4. Slowly operate the transmission jack to raise the transmission until the rear of the transmission is at the same level as the No. 3 crossmember ①.
5. Manually support the transmission rear cover.

   Move the transmission into position between the No. 3 crossmember and the floor panel ②.

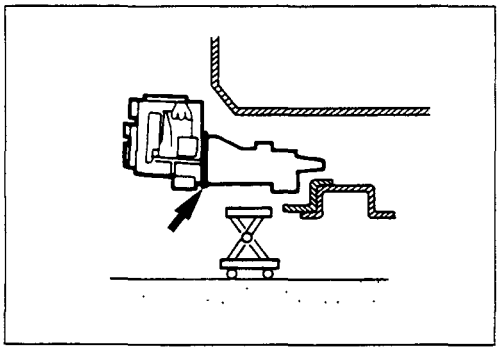

6. Slowly raise the transmission jack until the front of the transmission is aligned with the rear of the engine.

   The slope of the engine and the transmission must be the same.
7. Align the top gear shaft spline with the clutch drive plate spline.
8. Install the transmission to the engine.
9. Tighten the transmission nuts and bolts to the specified torque.

Transmission Nut and Bolt Torque	kg·m(lb.ft/N·m)
3.8 ± 0.8 (27.5 ± 5.8/37.2 ± 7.8)	

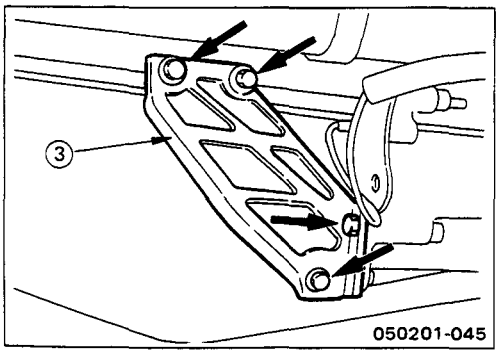

10. Connect the engine stiffener ③ to the cylinder body and the engine rear plate.
11. Tighten the stiffener bolts to the specified torque.

Stiffener Bolt Torque	kg·m(lb.ft/N·m)
4.1 ± 0.6 (29.7 ± 4.3/40.2 ± 5.9)	

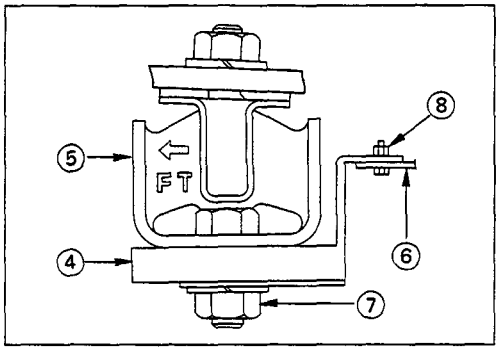

12. Install the rear mounting rubber bracket ④ to the mounting rubber ⑤ and the No. 3 crossmember ⑥.
13. Tighten the rear mounting rubber nuts ⑦ and the mounting bracket bolts ⑧ to the specified torque.

Rear Mounting Rubber Nut Torque	kg·m(lb.ft/N·m)
8.5 ± 0.5 (61.5 ± 3.6/83.3 ± 4.9)	

Mounting Bracket Bolt Torque	kg·m(lb.ft/N·m)
3.8 ± 0.1 (27.1 ± 6.9/36.8 ± 9.3)	

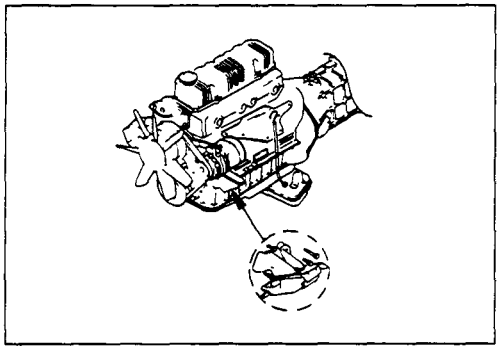

14. Tighten the engine mounting rubber nuts to the specified torque.

Engine Mounting Rubber Nut Torque	kg·m(lb.ft/N·m)
4.2 ± 0.5 (30.4 ± 3.6/41.2 ± 4.9)	

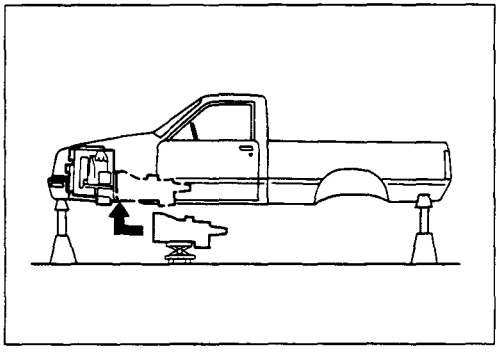

Transmission with Transfer (For 4 ×4)

1. Apply a thin coat of molybdenum disulfide grease to the top gear shaft spline.
2. Place the transmission with the mounting rubbers on a transmission jack.
3. Carefully move the transmission jack and transmission into position behind the engine.

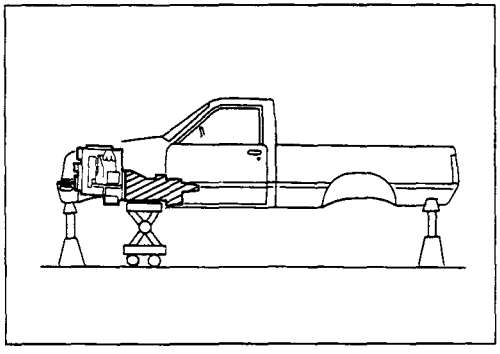

4. Slowly raise the transmission jack until the front of the transmission is aligned with the rear of the engine.

   The slope of the engine and the transmission must be the same.
5. Align the top gear shaft spline with the clutch driven plate spline.
6. Install the transmission to the engine.

   Tighten the transmission nuts and bolts to the specified torque.

Transmission Nut and Bolt Torque	kg·m(lb.ft/N·m)
3.8 ± 0.8 (27.5 ± 5.8/37.2 ± 7.8)	

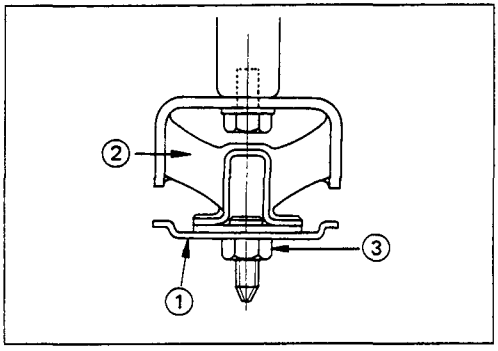

7. Install the mounting member ① to the mounting rubber ②.
8. Tighten the mounting member nuts ③ to the specified torque.

Mounting Rubber Nut Torque	kg·m(lb.ft/N·m)
4.2 ± 0.5 (30.4 ± 3.6/41.2 ± 4.9)	

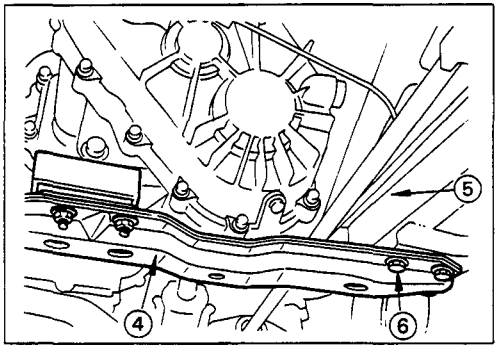

9. Install the mounting member ④ to the sidemembers ⑤.
10. Tighten the mounting member bolts ⑥ to the specified torque.

Mounting Member Bolt Torque	kg·m(lb.ft/N·m)
7.8 ± 1.6 (56.1 ± 11.2/76.0 ± 15.2)	

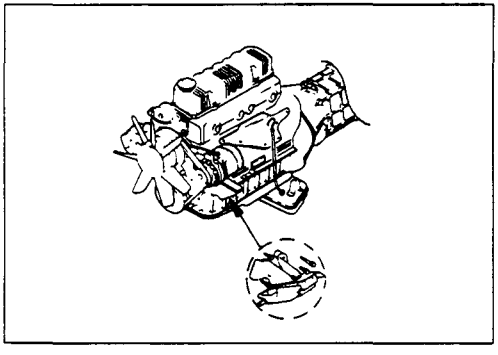

11. Tighten the engine mounting rubber nuts to the specified torque.

Engine Mounting Rubber Nut Torque	kg·m(lb.ft/N·m)
4.2 ± 0.5 (30.4 ± 3.6/41.2 ± 4.9)	

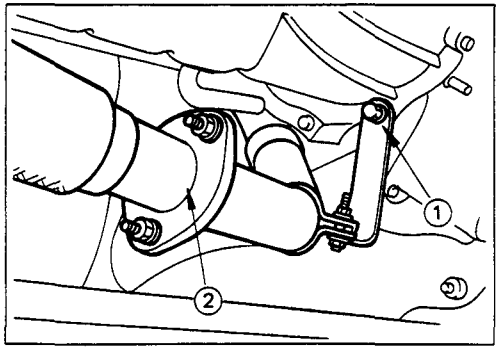

Exhaust Pipe

1. Connect the exhaust pipe to the exhaust manifold and the 2nd exhaust pipe ①.
2. Install the exhaust pipe bracket ② to the transmission case.

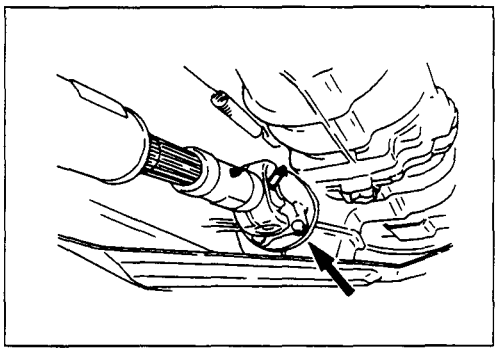

Front Propeller Shaft (For 4 ×4)

1. Connect the propeller shaft flange yoke to the matching flange.
2. Tighten the propeller shaft flange yoke bolt to the specified torque.

Propeller Shaft Flange Yoke Bolt Torque	kg·m(lb.ft/N·m)
Only 4ZE1 eng.	6.4 ± 0.4 (46.3 ± 2.9/62.8 ± 3.9)
Other	3.6 ± 0.3 (26.0 ± 2.2/35.3 ± 2.9)

Note:

If the splined yoke and the front propeller shaft have accidentally separated, align their setting marks and recouple them.

Refer to "FRONT PROPELLER SHAFT REMOVAL".

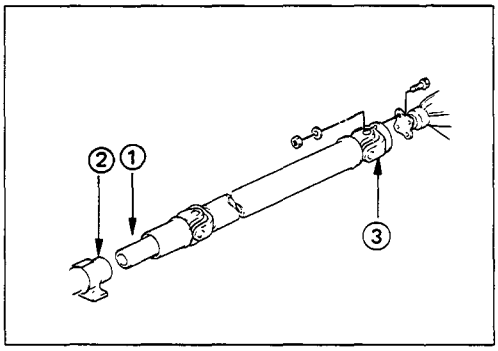

Rear Propeller Shaft (Single Shaft Type)

1. Insert the splined yoke ① with the propeller shaft into the transmission main shaft spline ②.
2. Install the propeller shaft flange yoke ③ to the drive pinion side.
3. Tighten the propeller shaft flange yoke bolt to the specified torque.

Propeller Shaft Flange Yoke Bolt Torque	kg·m(lb.ft/N·m)
Only 4ZE1 eng.	6.4 ± 0.4 (46.3 ± 2.9/62.8 ± 3.9)
Other	3.6 ± 0.3 (26.0 ± 2.2/35.3 ± 2.9)

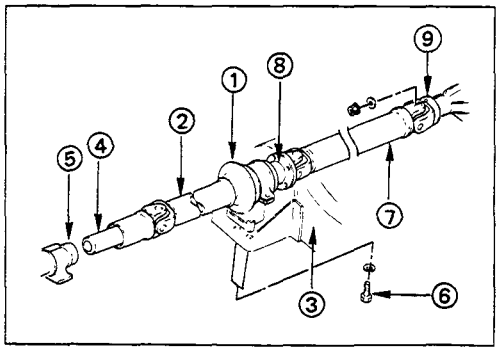

Rear Propeller Shaft (Dual Shaft Type)

1. Place the center bearing and retainer ① together with the 1st propeller shaft ② on the No. 4 cross-member ③.
2. Insert the splined yoke ④ into the transmission main shaft spline ⑤.
3. Tighten the center bearing retainer bolts ⑥ to the specified torque.

Center Bearing Retainer Bolt Torque	kg·m(lb.ft/N·m)
6.2 ± 0.2 (44.8 ± 1.5/60.8 ± 2.0)	

4. Connect the 2nd propeller shaft ⑦ to the center coupling ⑧ and the drive pinion ⑨.

   Be sure to align the setting marks applied at disassembly.

5. Tighten the coupling bolts to the specified torque.

Propeller Shaft Flange Yoke Bolt Torque	kg·m(lb.ft/N·m)
Only 4ZE1 eng.	6.4 ± 0.4 (46.3 ± 2.9/62.8 ± 3.9)
Other	3.6 ± 0.3 (26.0 ± 2.2/35.3 ± 2.9)

Note:

At the propeller shaft installation, the three universal yoke's spider pin center Ⓐ, Ⓑ and Ⓒ (shown in the illustration) must be aligned on the straight line to couple them in the proper universal joint phase.

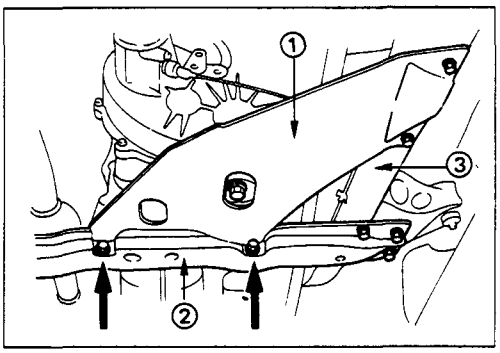

Transfer Case Protector (For 4 x 4)

1. Install the transfer case protector ① to the mounting member ② and the sidemembers ③.
2. Tighten the transfer case protector bolts to the specified torque.

Protector Bolt Torque	kg·m(lb.ft/N·m)
3.7 ± 1.0 (26.8 ± 7.2/36.3 ± 9.8)	

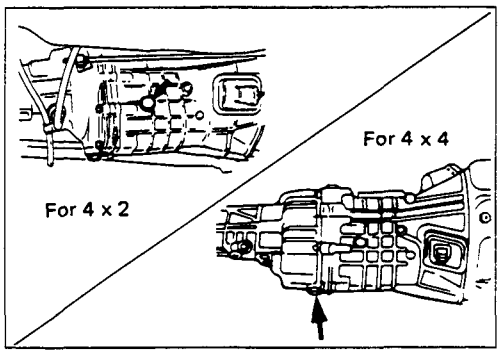

Gear Shift Lever

1. Replenish the transmission case and the transfer case with the specified engine oil.

Transmission and Transfer Case Oil	lit(US/UK gal)	
	4 × 2	4 × 4
MSG 4	1.25 (0.33/0.28)	4.40 (1.16/0.99)
MSG 5	1.55 (0.41/0.34)	
MUA	2.95 (0.77/0.64)	T/M: 2.95 (0.97/0.64) T/F: 1.45 (0.38/0.31)

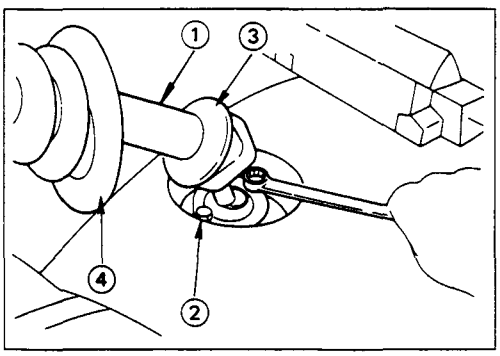

2. Install the quadrant box to the transmission rear cover.
3. Install the gear shift lever ① to the transmission case.
4. Tighten the gear shift lever cover ② bolts to the specified torque.

Shift Lever Cover Bolt Torque	kg·m(lb.ft/N·m)
2.0 ± 0.2 (14.5 ± 1.5/19.6 ± 2.0)	

5. Install the dust cover ③ and the grommmet ④.

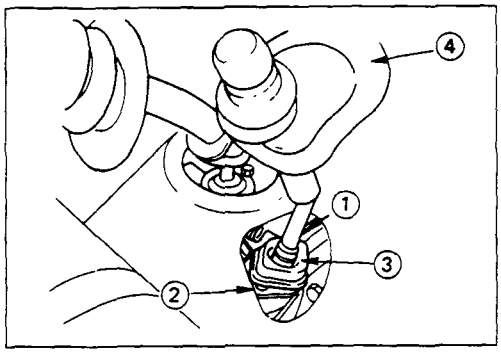

Transfer Change Lever (For 4 × 4)

1. Insert the transfer change lever ① into the transfer side case.
2. Install the ball seat cover along with the change lever retainer ②.
3. Tighten the change lever retainer bolts to the specified torque.

Change Lever Retainer Bolt Torque	kg·m(lb.ft/N·m)
2.0 ± 0.2 (14.5 ± 1.5/19.6 ± 2.0)	

4. Install the dust cover ③ and the grommet ④.

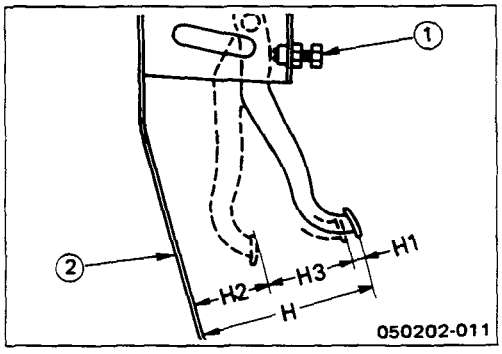

Clutch Pedal Adjustment

1. Reconnect the clutch control cable to the shift fork.
2. Adjust the clutch pedal height "H" with the stopper bolt or pedal switch ①.
3. Check the clutch pedal travel "H3".

Clutch Pedal Travel — mm(in)

	RHD	LHD
H	194 – 204 (7.6 – 8.0)	185 – 195 (7.3 – 7.7)
H1	15–20 (0.6–0.8) for Cable type	
	5–10 (0.2–0.6) for Hydraulic type	
H2	35 (1.4)	30 (1.2)

H: Pedal height from the pedal board ②
H1: Pedal free play
H2: Clearance between the clutch pedal and the pedal board ② with the clutch disengaged.

Engine Control Cable

Reconnect the engine control cable to the carburetor control lever.

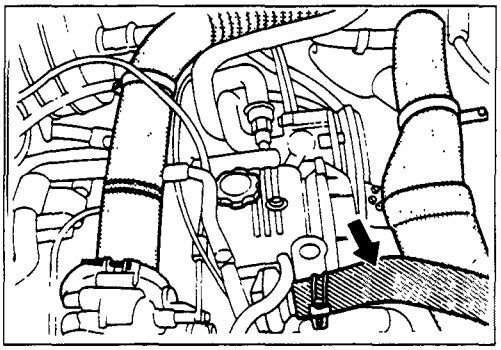

Radiator

1. Install the radiator.
   Be careful not to damage the retainer core.
2. Install the cooling fan and the fan shroud.
3. Connect the radiator upper and lower hoses.
4. Carefully reconnect the components tagged at removal.
5. Install the radiator undercover to the sidemembers.
6. Install the radiator grill to the deflector panel.

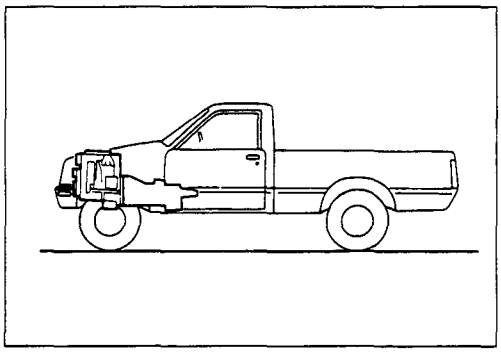

Lowering the Vehicle

1. Install the wheels to the vehicle.
2. Place a jack beneath the vehicle.
3. Raise the jack to remove the chassis stands.
4. Lower the vehicle to the ground.

Coolant Replenishment

Replenish the cooling system with coolant.

Coolant Capacity	lit(US/UK gal)
4ZC1	8.6 (2.27/1.89)
4ZD1/4ZE1	9.0 (2.38/1.98)

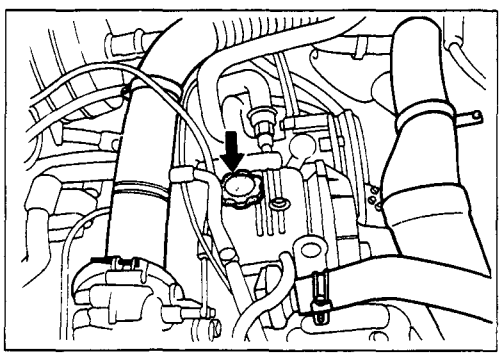

Engine Oil Replenishment

1. Fill the engine through the new filler port with new engine oil of the specified grade.

Engine Oil Capacity and Grade	lit(US/UK gal)
Capacity	4ZC1/4ZD1 : 4.9 (1.29/1.08) 4ZE1 : 5.5 (1.45/1.21)
Grade	SE, SF

2. Start the engine and allow it to idle for several minutes.
3. Stop the engine and wait five minutes for the oil to settle.
4. Recheck the oil level and replenish if necessary.

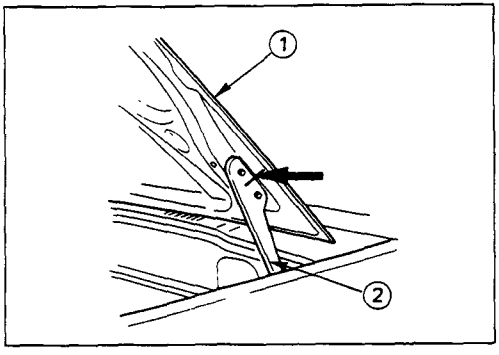

Engine Hood

Align the setting marks (applied at removal) on the engine hood ① and the engine hood hinges ② to install the engine hood.

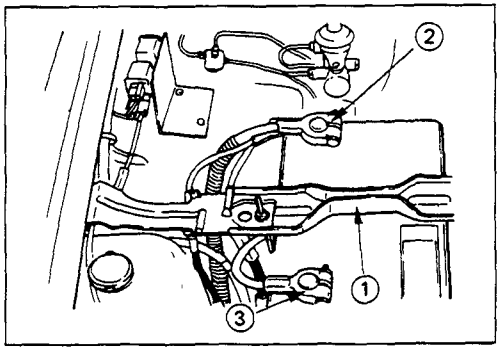

Battery

1. Check the battery fluid level and the specific gravity.
2. Secure the battery with the battery clamp ①.

   Do not overtighten the battery clamp.
3. Connect the battery cable ② and the ground cable ③ to the battery.
4. Connect the battery cable to the starter motor and the ground cable to the cylinder body.
5. Apply grease to the battery terminals.

Engine Warm-Up

After completing the required maintenance procedures, start the engine and allow it to idle until it is warm.

Check the following:

1. Engine idling speed

   Refer to "SERVICING" for the idling speed adjustment procedure.
2. Engine noise level
3. Engine lubricating system and cooling system

   Carefully check for oil and coolant leakage.
4. Engine control cable operation
5. Clutch engagement
6. Indicator warning light operation

0400A

ENGINE REPAIR KIT

All of the numbered parts listed below are included in the Engine Repair Kit.
The gaskets marked with an asterisk (*) are also included in the Top Overhaul Kit.

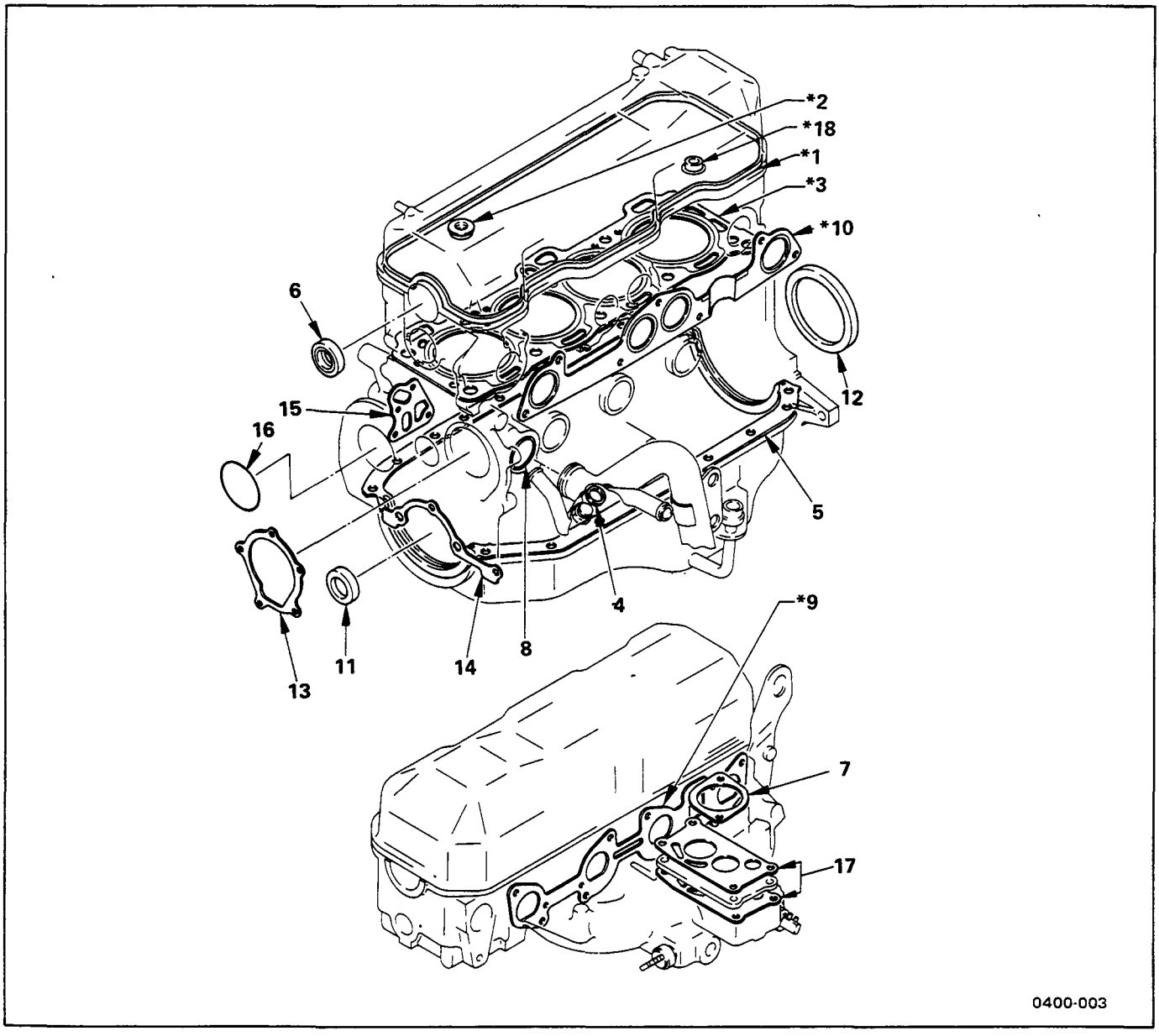

040002B, 040002C

* 1. Cylinder head cover gasket
* 2. Cylinder head cover bolt gasket
* 3. Cylinder head gasket
4. Oil pan drain plug gasket
5. Oil pan gasket
6. Camshaft front oil seal
7. Intake manifold outlet pipe gasket
8. Water pipe O-ring
* 9. Intake manifold gasket
* 10. Exhaust manifold gasket
11. Crankshaft front oil seal
12. Crankshaft rear oil seal
13. Water pump gasket
14. Retainer gasket
15. Oil filter adapter gasket
16. Oil Pump O-ring
17. Heat insulator gasket
* 18. Valve stem oil seal

0503000102A

ENGINE OVERHAUL

DISASSEMBLY

EXTERNAL PARTS

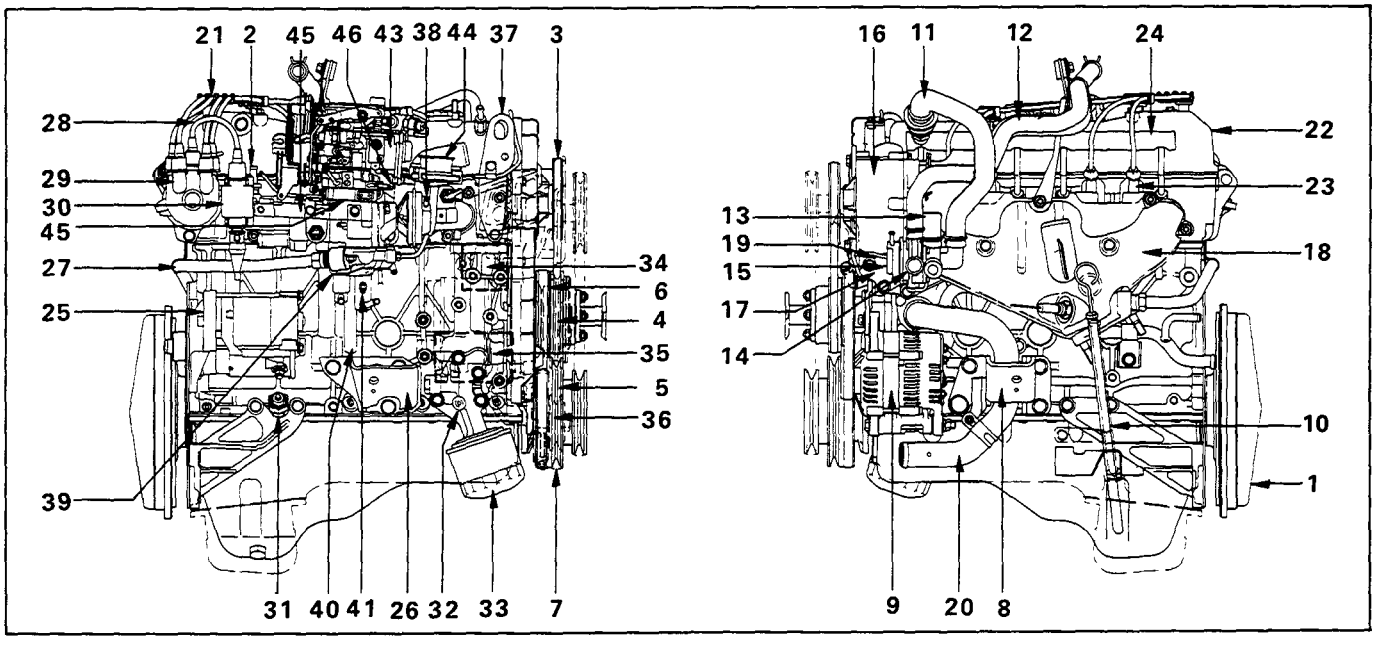

Disassembly Steps

▲ 1. Clutch pressure plate assembly and driven plate assembly
2. Condenser [V]
3. Air pump drive belt [V]
4. Compressor drive belt [V]
5. Cooling fan drive belt
6. Cooling fan pulley
7. Crankshaft pulley
8. Engine foot with mounting rubber
9. Alternator and bracket
10. Dipstick and guide tube
11. Rubber hose (A.S.V. to check valve) [V]
12. Rubber hose (Air pump to air cleaner) [V]
13. Rubber hose (Air pump to A.S.V.) [V]
14. Rubber hose (A.S.V. to air intake duct bracket) [V]
15. Air switching valve or air bypass valve [V]
16. Air pump [V]
17. Air pump bracket "B" [V]
18. Exhaust manifold
19. Air pump bracket "A" [V]
20. Water intake pipe
21. High tension cable
22. Cylinder head cover
23. Spark plug
24. Air manifold with check valve [V]
25. Starter motor
26. Engine foot with mounting rubber
27. EGR pipe [V]
28. High tension cable (Ignition coil to distributor)
29. Distributor
30. Ignition coil [V]
31. Oil pressure switch
32. Oil pressure unit [V]
33. Oil filter adapter with oil filter
34. Power steering oil pump and bracket [V]
35. Compressor and bracket [V]
36. Compressor idler pulley and bracket [V]
37. Front engine hanger
38. EGR valve [V]
39. EGR adapter [V]
40. Fuel damper
41. Fuel pump
42. Water outlet pipe
▲ 43. Carburetor
44. BP transducer and bracket [V]
45. Intake manifold
46. Fast idle solenoid (with A/C)

[V] : Optional on some models

05030001

Important Operations

Emission Control Vacuum Hoses

Tag each of the emission control vacuum hoses before disassembly.

This will ensure that the hoses are reconnected correctly.

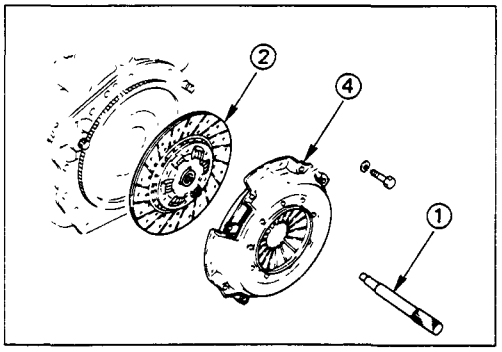

1. Clutch Pressure Plate Assembly and Driven Plate Assembly

1) Use the clutch pilot aligner ① to prevent the driven plate assembly ② from falling free.

   Clutch Pilot Aligner: 5-8525-3001-0 (J-24547)

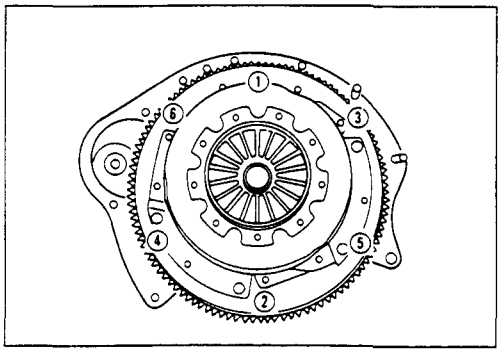

2) Loosen the clutch cover bolts in the numerical order shown in the illustration.
3) Remove the pressure plate assembly ③ from the flywheel.
4) Remove the driven plate from the flywheel.

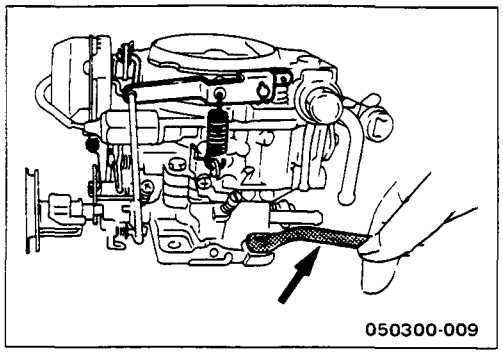

43. Carburetor

1) Disconnect the PCV hose, the fuel rubber hose, and the switch valve from the carburetor.
2) Use the carburetor wrench to remove the carburetor.

   Carburetor Wrench: 5-8511-9003-0 (J-26510)

05030601A

INTERNAL PARTS

MAJOR COMPONENTS

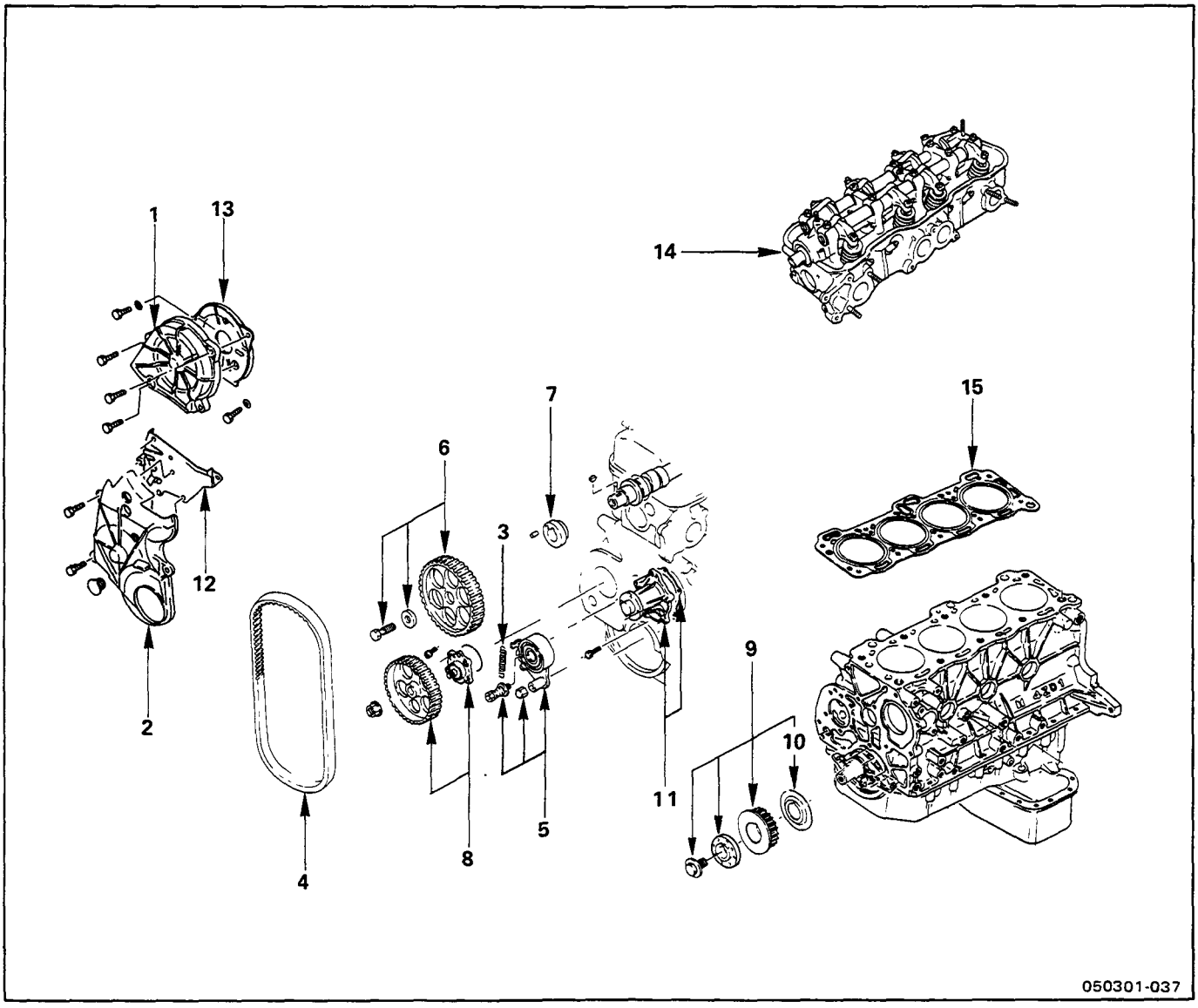

Disassembly Steps-1

1. Timing belt upper cover
2. Timing belt lower cover
3. ▲ Tension spring
4. ▲ Timing belt
5. ▲ Tension pulley
6. ▲ Camshaft timing pulley
7. Camshaft boss
8. ▲ Oil pump with timing pulley
9. Crankshaft timing pulley
10. Timing belt guide plate
11. Water pump
12. Cylinder body front plate (Lower)
13. Cylinder head front plate (Upper)
14. ▲ Cylinder head with rocker arm shaft and camshaft
15. Cylinder head gasket

Inverted Engine

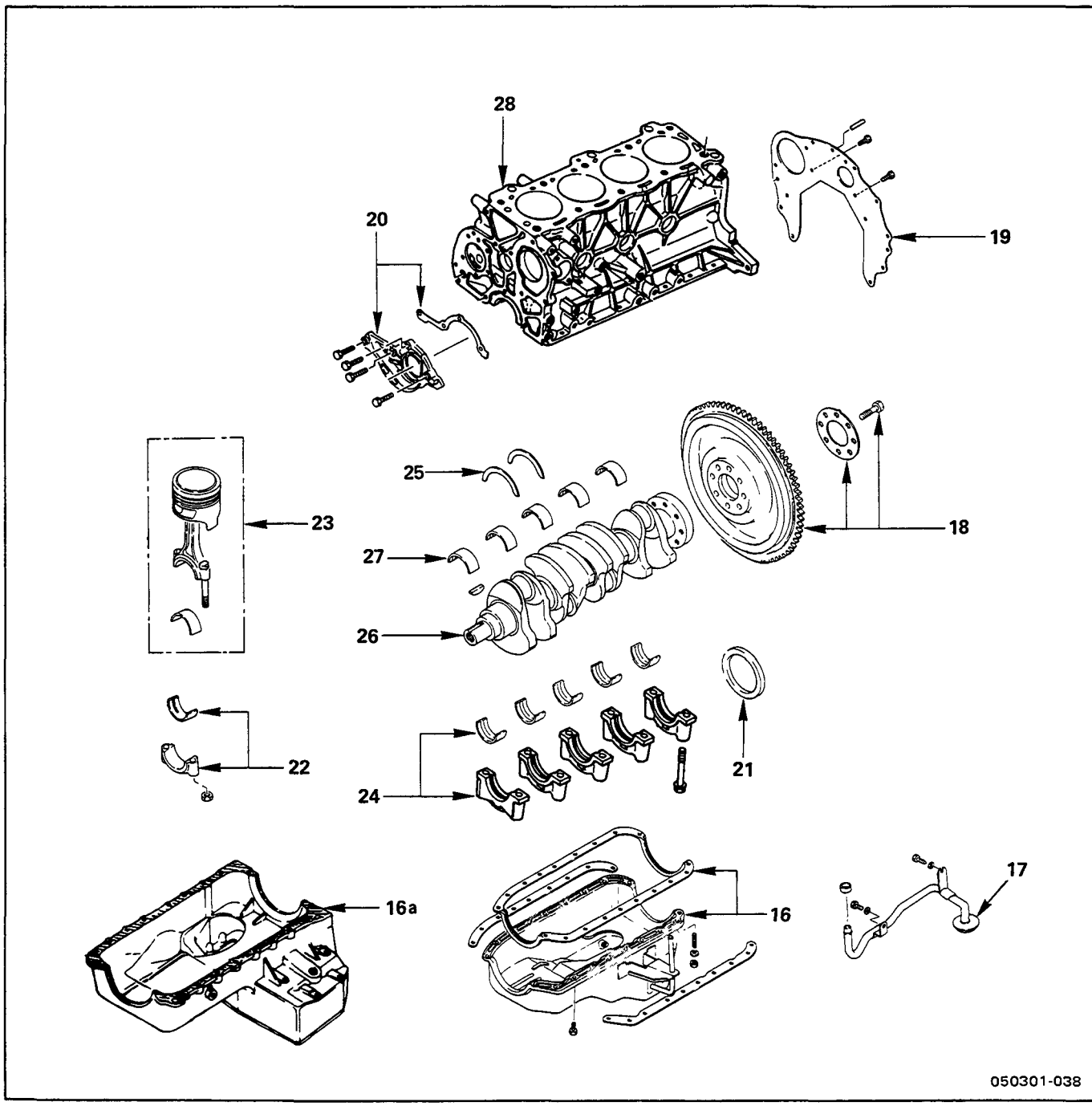

0503060002D, 0503060002E

Disassembly Steps-2

16. Oil pan (For 4 × 2 except 4ZE1)
16a. Oil pan (For 4 × 4 and 4ZE1)
17. Oil strainer
▲ 18. Flywheel and bolt
19. Cylinder body rear plate
20. Crankshaft front oil seal retainer
21. Crankshaft rear oil seal
▲ 22. Connecting rod bearing cap with lower bearing
▲ 23. Piston and connecting rod with upper bearing
▲ 24. Crankshaft bearing cap with lower bearing
25. Crankshaft thrust bearing
26. Crankshaft
▲ 27. Crankshaft upper bearing
28. Cylinder body

05030601

Important Operations

0503060106

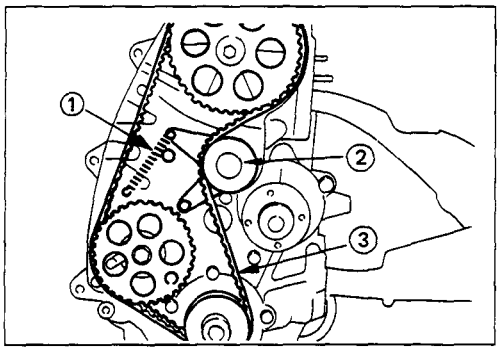

3. Tension Spring

4. Timing Belt

5. Tension Pulley

1) Remove the tension spring.
2) Loosen bolt ①, draw the tension pulley ② fully to the water pump side.
3) Remove the timing belt ③.
4) Remove the tension pulley.

050306010701

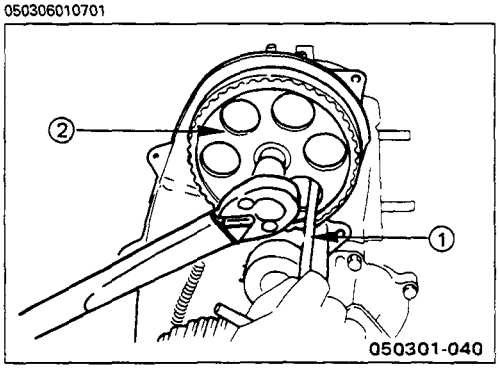

6. Camshaft Timing Pulley

1) Set a T-bar wrench ① to one of the timing cover bolts through a timing pulley hole.

   This will prevent the timing pulley ② from turning.
2) Loosen the timing pulley bolt and remove the timing pulley.

0503060108

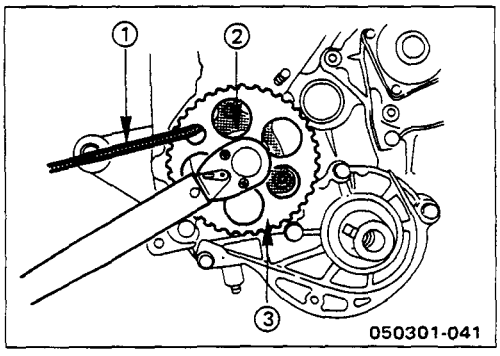

8. Oil Pump with Timing Pulley

Use a 6 mm (0.24 in) Allen wrench ① to remove the oil pump ② along with the oil pump timing pulley ③ and the rotor.

0503060109

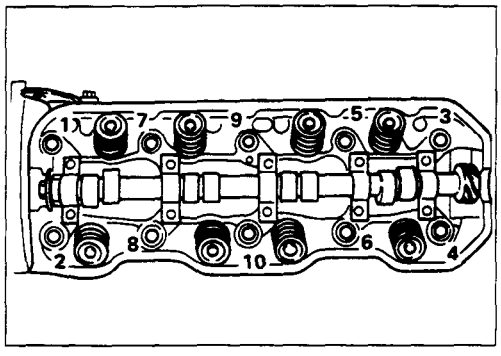

14. Cylinder Head with Rocker Arm Shaft and Camshaft

Use the extension bar wrench to loosen the cylinder head bolts in numerical order a little at a time.

Extension Bar Wrench: 9-8511-4209-0 (J-24239-01)

Note:

Head warpage could result from bolts removing in incorrect order.

0503010107

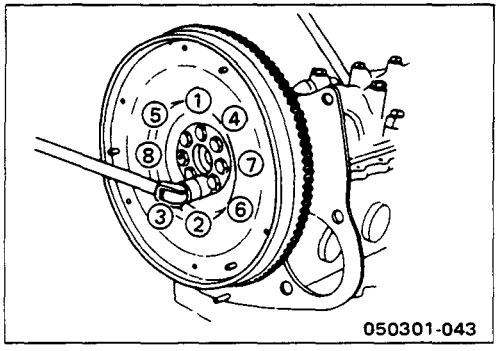

18. Flywheel

1) Block the crankshaft with a piece of hard wood to prevent the flywheel from turning.
2) Loosen the flywheel bolts in numerical order a little at a time.

050301011501

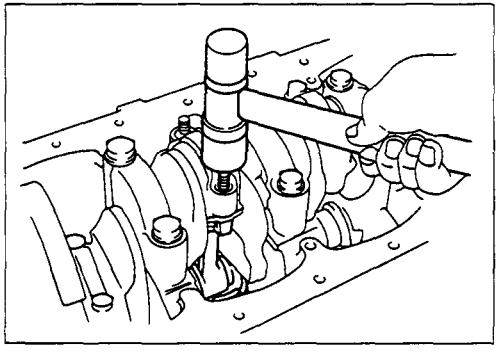

22. Connecting Rod Bearing Cap with Lower Bearing

Remove the connecting rod cap nuts.

Using a plastic-faced hammer, ligtly tap the connecting rod bolts and lift off the rod connecting cap.

Note:

Keep the lower bearing insert with the connecting rod cap.

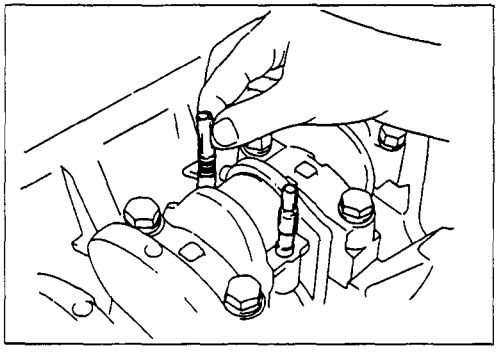

Cover the connecting rod bolts with a short piece of hose to protect the crankshaft from damage.

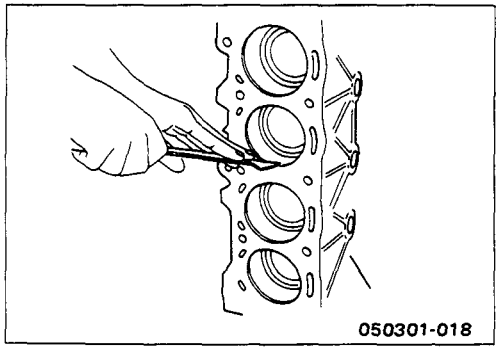

23. Piston and Connecting Rod with Upper Bearing

1) Remove carbon deposits from the upper portion of the cylinder wall with a scraper before removing the piston and connecting rod.
2) Move the piston to the top of the cylinder and tap it with a hammer grip or similar object from the connecting rod lower side to drive it out.

0503010114A

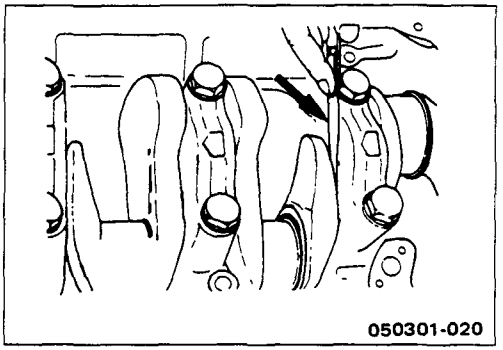

0503010114B

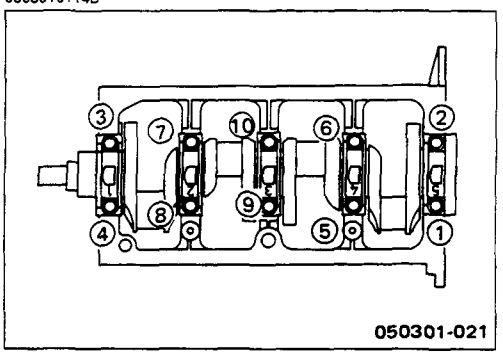

0503010116

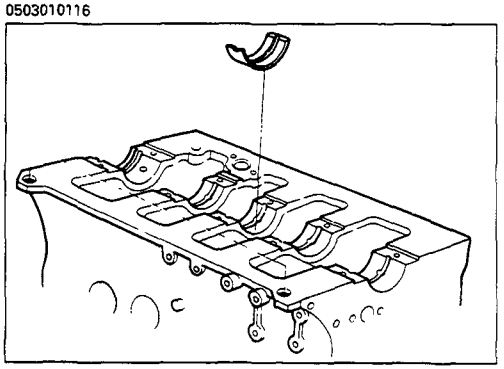

24. *Crankshaft Bearing Cap with Lower Bearing*

1) Measure the crankshaft end play at the center journal of the crankshaft.

   If the measured value exceeds the specified limit, the crankshaft thrust bearing must be replaced.

Crankshaft End Play — mm(in)

Standard	Limit
0.06 – 0.25 (0.0024 – 0.0099)	0.3 (0.012)

2) Loosen the bearing cap bolts in numerical order a little at a time.

Note:

- **Keep the lower bearing and bearing cap together.**
- **Arrange the bearing caps and lower thrust washers in correct order.**

27. Crankshaft Upper Bearing

Note:

- **Keep the upper bearing and upper thrust washer to gether with the cylinder block.**

0503030001A

MINOR COMPONENTS

CYLINDER HEAD WITH ROCKER ARM SHAFT AND CAMSHAFT

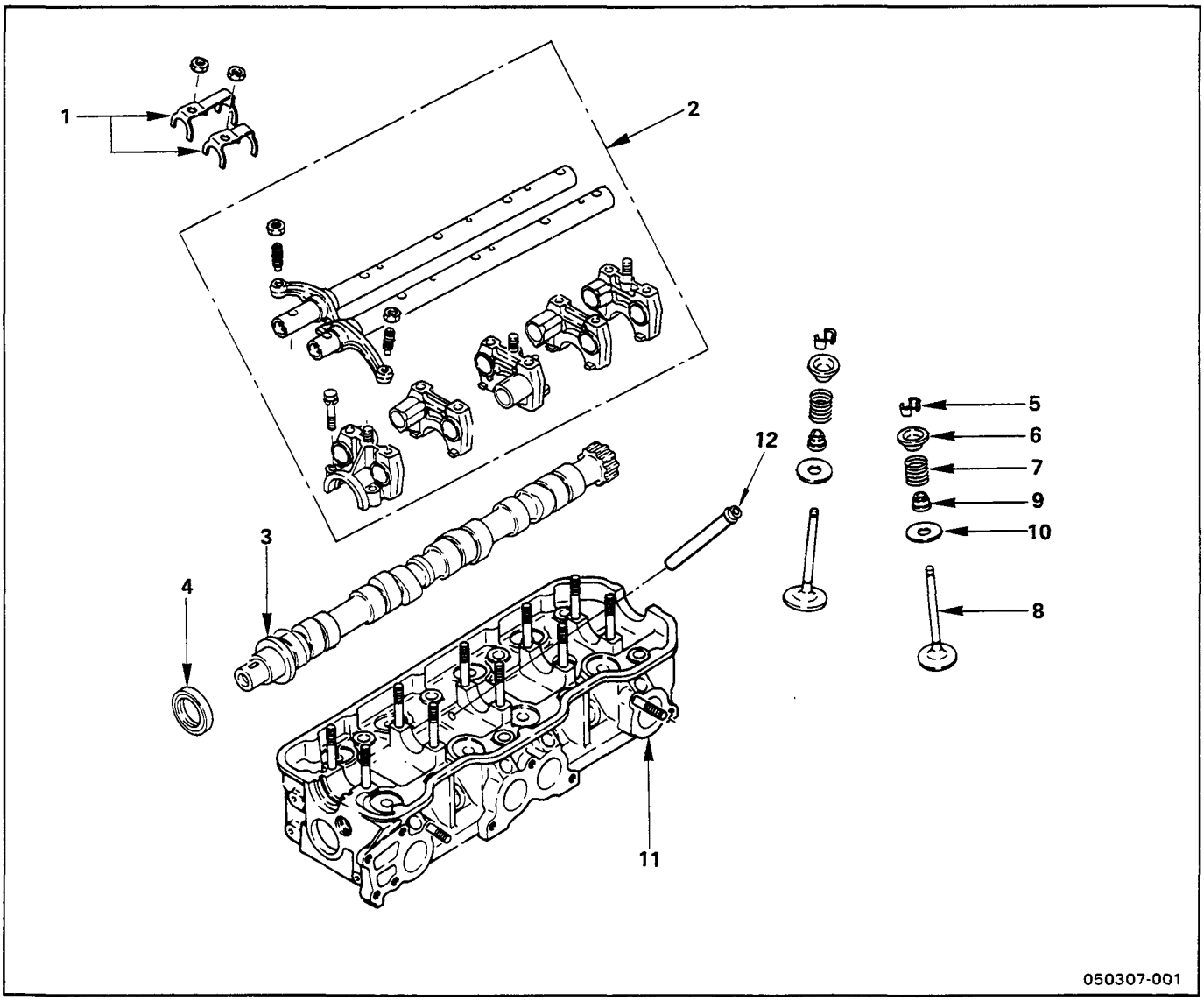

0503030001B

Disassembly Steps

- ▲ 1. Rocker arm shaft bracket nut and spring (No.1 - No.4)
- ▲ 2. Rocker arm shaft, rocker arm, and bracket
- ▲ 3. Camshaft
- 4. Camshaft front oil seal
- ▲ 5. Split collar
- 6. Valve spring upper seat
- 7. Valve spring
- ▲ 8. Intake and exhaust valve
- 9. Valve stem oil seal
- 10. Valve spring lower seat
- 11. Cylinder head
- 12. Fuel pump push rod

05030301

Important Operations

0503030103

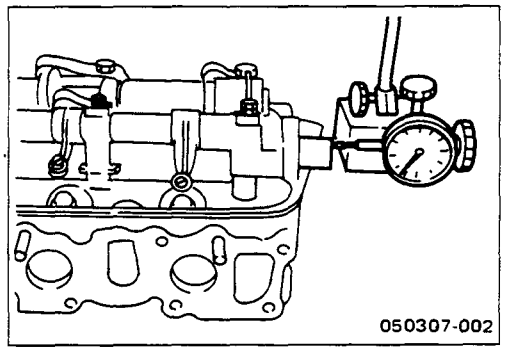

1. Rocker Arm Shaft Bracket Nut and Spring (No.1 - No.4)

2. Rocker Arm Shaft, Rocker Arm, and Bracket

3. Camshaft

1) Measure the camshaft end play before removing the rocker arm shaft, the bracket, and the camshaft.

2) Camshaft End Play Measurement

Use a dial indicator to measure the camshaft end play.

If the measured value exceeds the specified limit, the camshaft and/or the cylinder head must be replaced.

Camshaft End Play — mm(in)

Standard	Limit
0.050 – 0.114 (0.0020 – 0.0044)	0.2 (0.008)

050306011

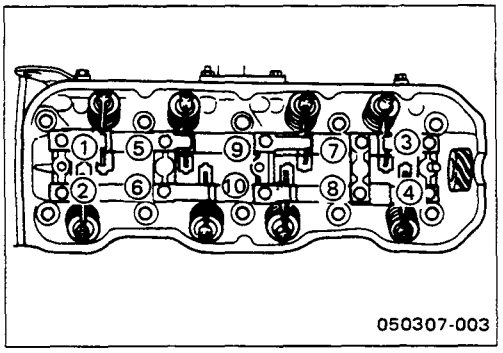

3) Loosen the rocker arm shaft bracket bolts in numerical order a little at a time.

05030301

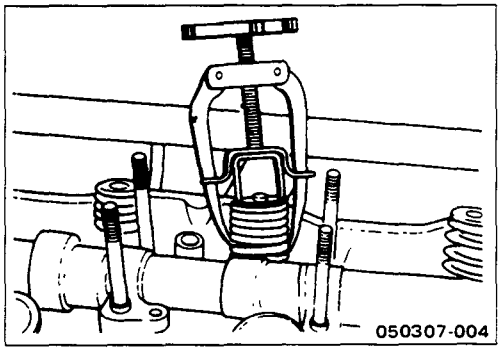

5. Split Collar

1) Place the cylinder head on a flat wooden surface.

2) Use the spring compressor to remove the split collars.

Do not allow the valve to fall from the cylinder head.

Spring Compressor: 5-8840-0205-0 (J-26513-A)

050303102

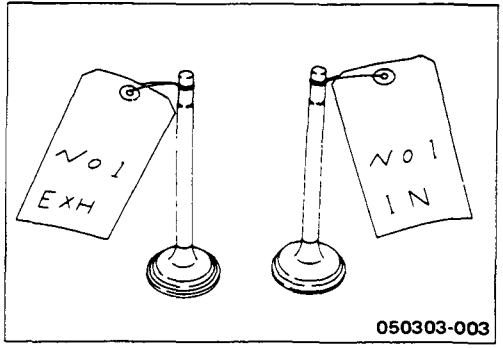

8. Intake and Exhaust Valve

Note:

Arrenge the intake and exhaust valves.

0503020001A

ROCKER ARM SHAFT AND ROCKER ARM

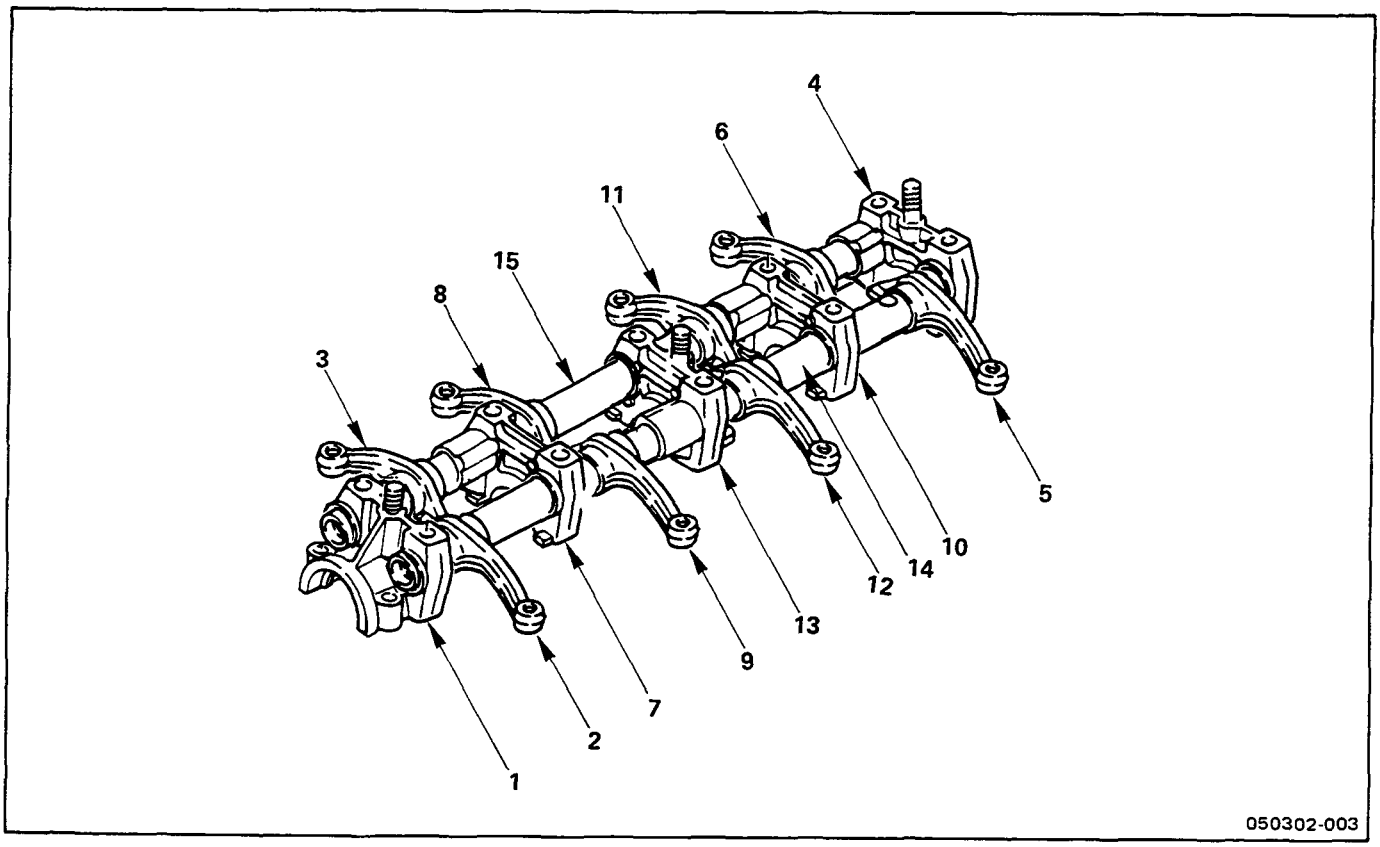

0503020001B

Disassembly Steps

1. No. 1 rocker arm shaft bracket
2. No. 1 exhaust valve rocker arm
3. No. 1 intake valve rocker arm
4. No. 5 rocker arm shaft bracket
5. No. 4 exhaust valve rocker arm
6. No. 4 intake valve rocker arm
7. No. 2 rocker arm shaft bracket
8. No. 2 intake valve rocker arm
9. No. 2 exhaust valve rocker arm
10. No. 4 rocker arm shaft bracket
11. No. 3 intake valve rocker arm
12. No. 3 exhaust valve rocker arm
13. No. 3 rocker arm shaft bracket
14. Rocker arm shaft (Exhaust side)
15. Rocker arm shaft (Intake side)

Important Operations

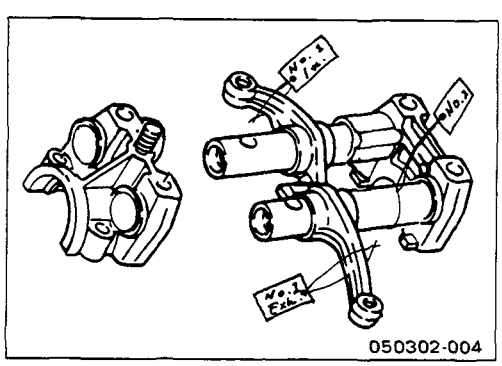

▲ Rocker Arm Shaft Bracket

▲ Rocker Arm

If the rocker arms and rocker arm shaft brackets are to be reused, they must be installed to their original positions.

Tag each rocker arm with the cylinder number from which it was removed.

Tag each rocker arm shaft bracket with the position from which it was removed (1, 2, 3, 4 and 5 from front to back).

050304A

PISTON AND CONNECTING ROD

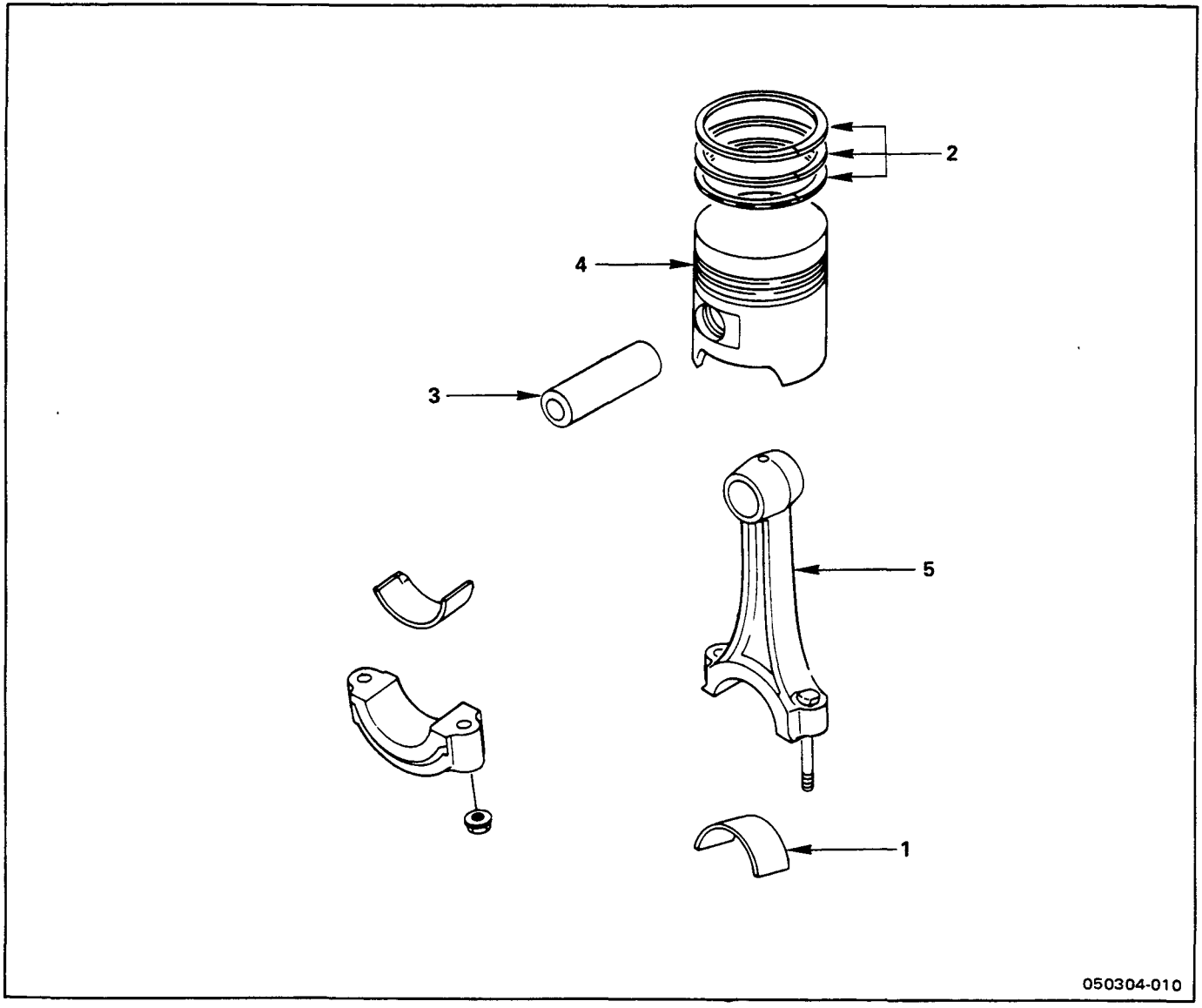

0503040001B

Disassembly Steps

- ▲ 1. Connecting rod bearing
- ▲ 2. Piston ring
- ▲ 3. Piston pin
- ▲ 4. Piston
- ▲ 5. Connecting rod

05030401

Important Operations

0503040101

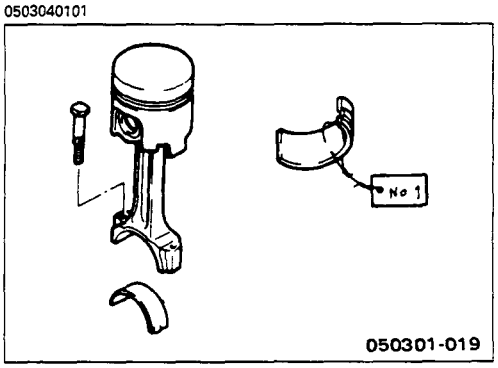

1. Connecting Rod Bearing

If the connecting rod bearings are to be reinstalled, mark their fitting positions by tagging each bearing with the cylinder number from which it was removed.

0503040102

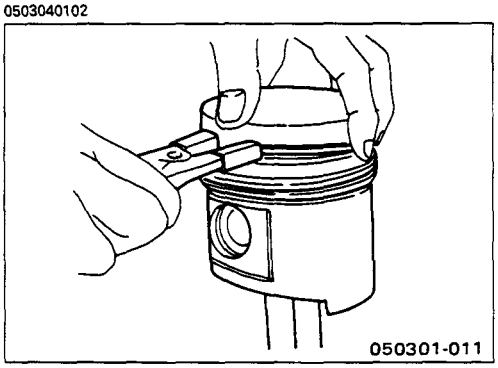

2. Piston Ring

1) Clamp the connecting rod in a vise.

   Take care not to damage the connecting rod.

2) Use a piston ring replacer to remove the piston rings.

   Piston Ring Replacer:

   Do not attempt to use some other tool to remove the piston rings. Piston ring stretching will result in reduced piston ring tension.

050304010401A

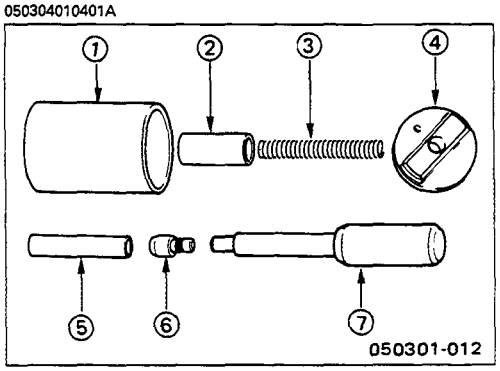

3. Piston Pin
4. Piston
5. Connecting Rod

Piston Pin Replacement Using The Special Tool

Piston Pin Replacer: 5-8840-0359-0 for 4ZC1
5-8840-0361-0 for 4ZD1/4ZE1

① Body
② Spring guide
③ Spring
④ Adapter
⑤ Installation guide
⑥ Removal guide
⑦ Driver handle

050304010401B

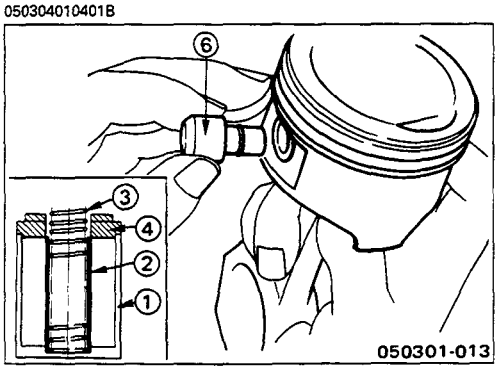

Piston Pin Removal Procedure

1) Set the spring guide ②, the spring ③, and the adapter ④ to the body ①.
2) Install the removal guide ⑥ to the piston pin.

050304010401C

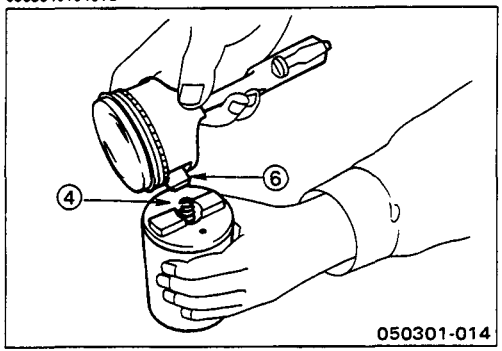

3) Set the piston with the removal guide ⑥ to the top side of the adapter ④.

050304010401D

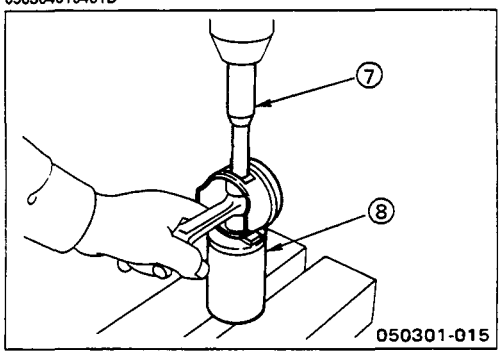

4) Place the piston pin replacer ⑧ (now holding the piston) on a bench press.
5) Use the bench press and the driver handle ⑦ to slowly force out the piston pin.
6) Remove the connecting rod from the piston.

0504

INSPECTION AND REPAIR

Make the necessary adjustments, repairs, and part replacements if excessive wear or damage is discovered during inspection.

050401, 05040101A

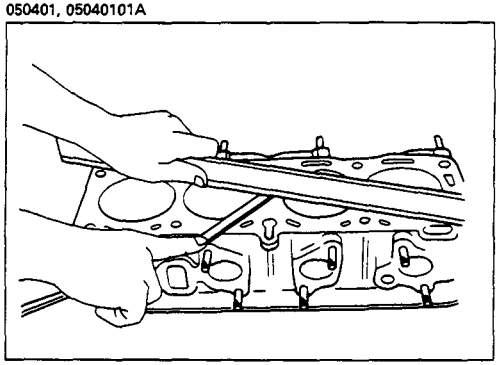

CYLINDER HEAD

Cylinder Head Lower Face Warpage

1. Use a straight edge and a feeler gauge to measure the four sides and the two diagonals of the cylinder head lower face.
2. Regrind the cylinder head lower face if the measured values are greater than the specified limit but less than the maximum grinding allowance.

05040101B

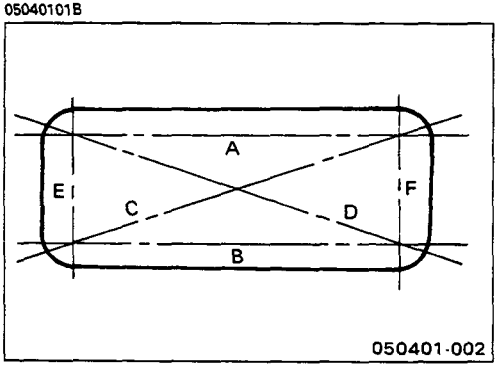

If the measured values exceed the maximum grinding allowance, the cylinder head must be replaced.

Cylinder Head Lower Face Warpage mm(in)

Standard	Limit	Maximum Grinding Allowance
0.05 (0.002) or less	0.2 (0.008)	0.4 (0.016)

05040101C

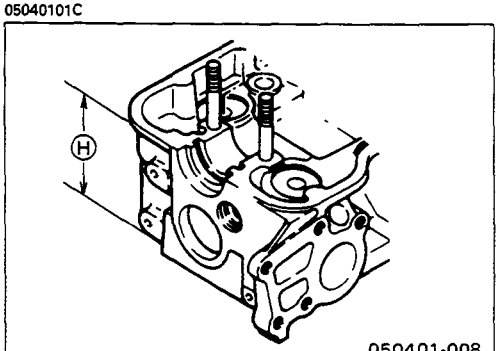

Cylinder Head Height Ⓗ (Reference) mm(in)

Standard
93.15 – 93.25 (3.667 – 3.671)

Note:

If the cylinder head lower face is reground, valve depression must be checked.

05040102

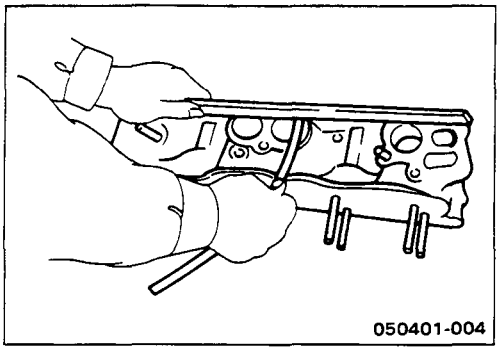

Manifold Fitting Face Warpage

Use a straight edge and a feeler gauge to measure the manifold cylinder head fitting face warpage.

Regrind the manifold cylinder head fitting faces if the measured values are greater than the specified limit but less than the maximum grinding allowance.

If the measured values exceed the maximum grinding allowance, the cylinder head must be replaced.

Manifold Fitting Face Warpage mm(in)

Standard	Limit	Maximum Grinding Allowance
0.05 (0.002) or less	0.20 (0.008)	0.40 (0.016)

05040103

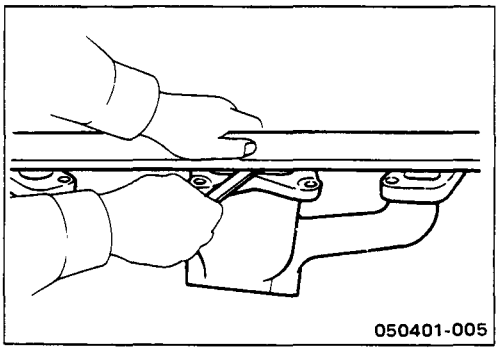

Exhaust Manifold Warpage

Use a straight edge and a feeler gauge to measure the manifold cylinder head fitting face warpage.

Regrind the exhaust manifold cylinder head fitting faces if the measured values are between the specified limit and the standard.

If the measured values exceed the specified limit, the manifold must be replaced.

Exhaust Manifold Warpage mm(in)

Standard	Limit
0.05 (0.002) or less	0.20 (0.008)

050403, 05040301A

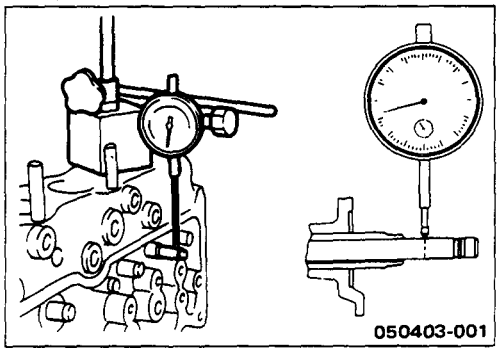

VALVE GUIDE

Valve Stem and Valve Guide Clearance

Measuring Method

1. With the valve stem inserted in the valve guide, set the dial indicator needle to "0".
2. Move the valve head from side to side.

   Read the dial indicator.

   Note the highest dial indication.

   If the measured values exceed the specified limit, the valve and the valve guide must be replaced as a set.

Valve Stem Clearance mm(in)

	Standard	Limit
Intake Valve	0.023–0.056 (0.0009–0.0022)	0.200 (0.0080)
Exhaust Valve	0.038–0.070 (0.0015–0.0028)	0.250 (0.0098)

05040301B

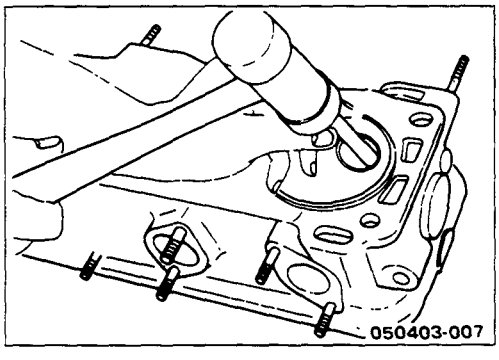

Valve Guide Replacement

Valve Guide Removal

Use a hammer and the valve guide replacer to drive out the valve guide from the cylinder head lower face.

Valve Guide Replacer: 5-8523-0002-0 (J-26512-1)

0504030202A

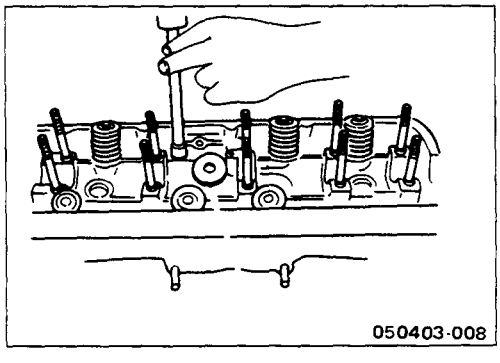

Valve Guide Installation

1. Apply engine oil to the valve guide outer circumference.
2. Attach the valve guide installer to the valve guide.
3. Use a hammer to drive the valve guide into position from the cylinder head upper face.

   Valve Guide Installer: 5-8523-0002-0 (J-26512-2)

0504030202B

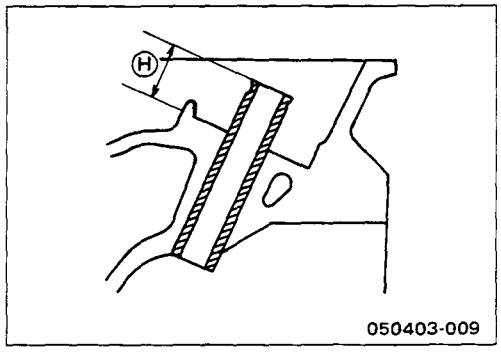

4. Measure the height of the valve guide upper end from the upper face of the cylinder head.

Valve Guide Upper End Height Ⓗ (Reference) mm(in)
16.1 – 16.3 (0.634 – 0.642)

Note:

If the valve guide has been removed, both the valve and the valve guide must be replaced as a set.

050404, 05040401

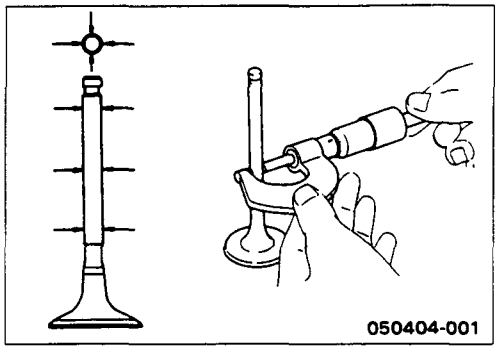

VALVE AND VALVE SEAT INSERT

Valve Stem Outside Diameter

Measure the valve stem diameter at three points.

If the measured value is less than the specified limit, the valve and the valve guide must be replaced as a set.

Valve Stem Outside Diameter mm(in)

	Standard	Limit
Intake Valve	7.949 – 7.961 (0.3129 – 0.3134)	7.88 (0.3102)
Exhaust Valve	7.932 – 7.946 (0.3118 – 0.3124)	7.85 (0.3090)

05040402, 0504040201

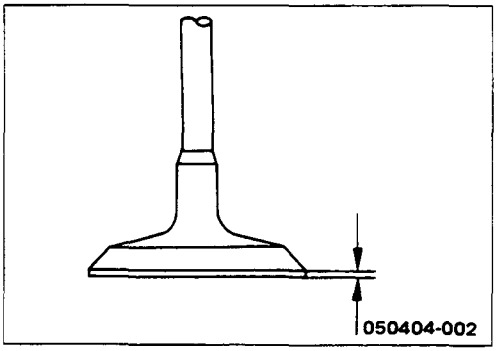

Valve Thickness

Measure the valve thickness.

If the measured value is less than the specified limit, the valve and the valve guide must be replaced as a set.

Intake and Exhaust Valve Thickness mm(in)

	Standard	Limit
Intake Valve	1.1 (0.043)	0.8 (0.031)
Exhaust Valve	1.3 (0.051)	1.0 (0.040)

05040403

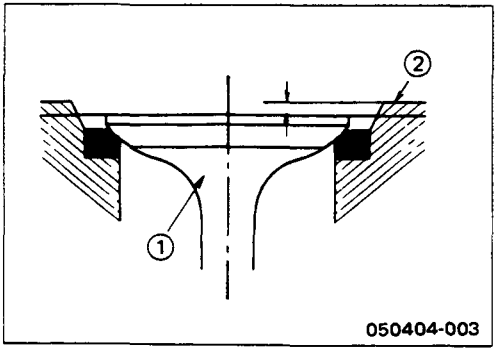

Valve Depression

1. Install the valve ① to the cylinder head ②.
2. Use a depth gauge or a straight edge with steel rule to measure the valve depression from the cylinder head lower surface.
   If the measured value exceeds the specified limit, the valve seat insert must be replaced.

Valve Depression mm(in)

Standard	Limit
1.0 (0.040)	1.7 (0.067)

05040404

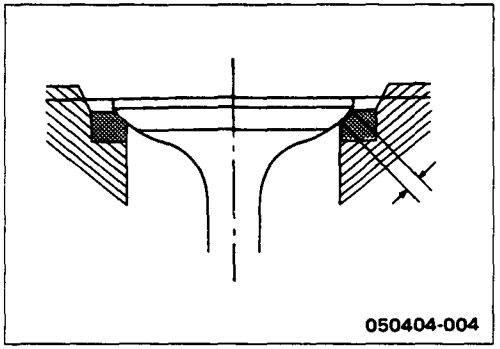

Valve Contact Width

1. Check the valve contact faces for roughness and unevenness.

   Make smooth the valve contact surfaces.

2. Measure the valve contact width.

   If the measured value exceeds the specified limit, the valve seat insert must be replaced.

Valve Contact Width — mm(in)

Standard	Limit
1.2 — 1.5 (0.05 — 0.06)	2.0 (0.08)

05040405, 0504040501

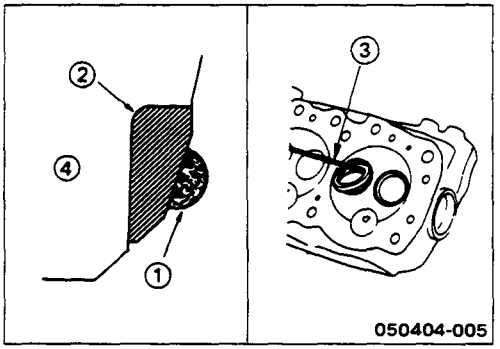

Valve Seat Insert Replacement

Valve Seat Insert Removal

1. Arc weld the entire inside circumference ① of the valve seat insert ②.
2. Allow the valve seat insert to cool for a few minutes.

   This will invite contraction and make removal of the valve seat insert easier.

3. Use a screwdriver ③ to pry the valve seat insert free.

   Take care not to damage the cylinder head ④.

4. Carefully remove carbon and other foreign material from the cylinder head insert bore.

0504040502

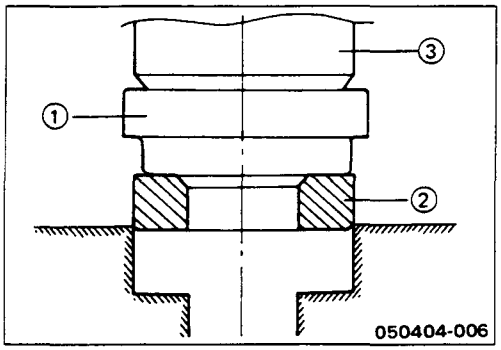

Valve Seat Insert Installation

1. Carefully place the attachment ① (having a smaller outside diameter than the valve seat insert) on the valve seat insert ②.

Note:

The smooth side of the attachment must contact the valve seat insert.

2. Use a bench press ③ to gradually apply pressure to the attachment and press the valve seat insert into place.

Note:

Do not apply an excessive amount of pressure with the bench press. Damage to the valve seat insert will result.

05040406A

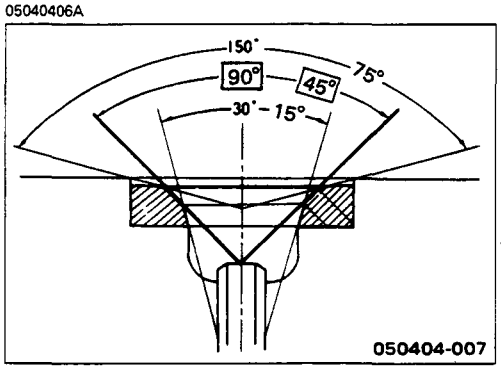

Valve Seat Insert Correction

1. Remove the carbon from the valve seat insert surface.
2. Use a valve cutter (15°, 45°, and 75° blades) to minimize scratches and other rough areas. This will bring the contact width back to the standard value.

   Remove only the scratches and rough areas. Do not cut away too much. Take care not to cut away unblemished areas of the valve seat surface.

05040406B

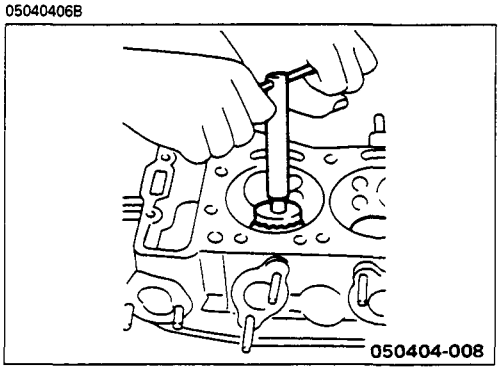

Valve Seat Angle	degree
45°	

Note:

Use an adjustable valve cutter pilot.

Do not allow the valve cutter pilot to wobble inside the valve guide.

05040406C

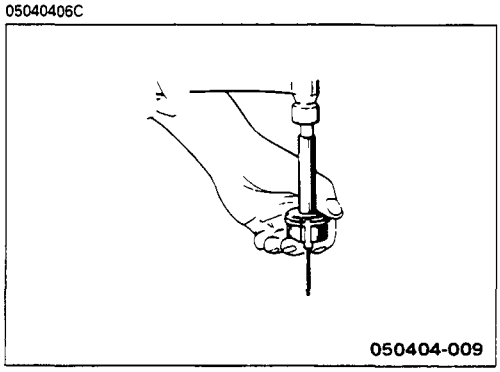

3. Apply abrasive compound to the valve seat insert surface.
4. Insert the valve into the valve guide.
5. Turn the valve while tapping it to fit the valve seat insert.
6. Check that the valve contact width is correct.
7. Check that the valve seat insert surface is in contact with the entire circumference of the valve.

05040405, 0504040501

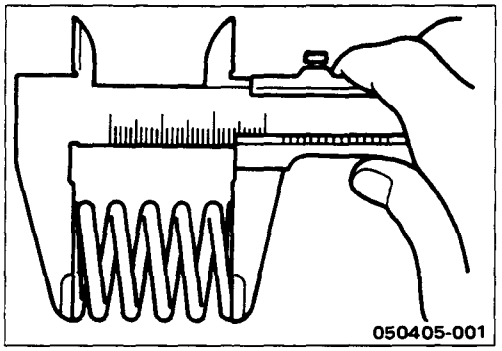

VALVE SPRING

Valve Spring Free Height

Use a vernier caliper to measure the valve spring free height.
If the measured value is less than the specified limit, the valve spring must be replaced.

Inner Spring and Outer Spring Free Height mm(in)

Standard	Limit
48.1 (1.894)	46.5 (1.83)

05040502

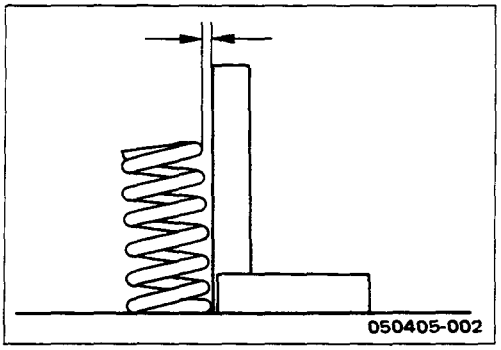

Valve Spring Squareness

Use a surface plate and a square to measure the valve spring squareness.

If the measured value exceeds the specified limit, the valve spring must be replaced.

Inner and Outer Spring Squareness mm(in)

2.1 (0.08)

05040503

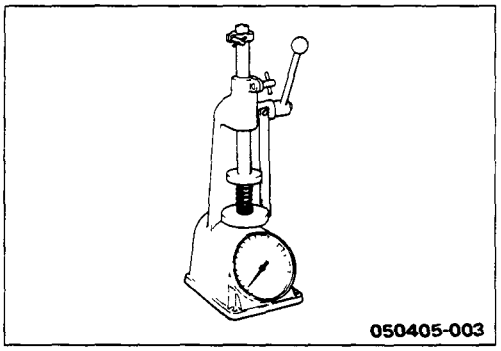

Valve Spring Tension

Use a spring tester to measure the valve spring tension.

If the measured value is less than the specified limit, the valve spring must be replaced.

Valve Spring Tension kg(lb/N)

Compressed Height	Standard	Limit
41.0 mm (1.61 in)	23.1–27.1 (50.8–59.6/ 226.38–265.58)	22.0 (48.4/ 215.60)

050406, 05040601

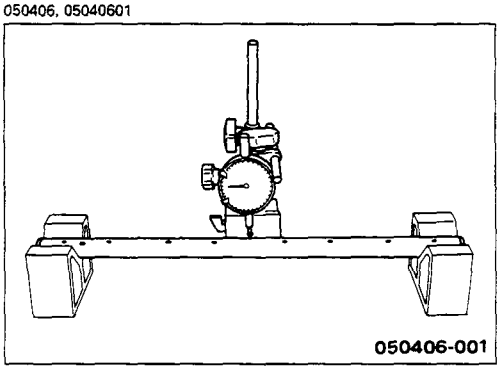

ROCKER ARM SHAFT AND ROCKER ARM

Rocker Arm Shaft Run-Out

1. Place the rocker arm shaft on a V-block.
2. Use a dial indicator to measure the rocker arm shaft central portion run-out.

   If the run-out is very slight, correct the rocker arm shaft run-out with a bench press. The rocker arm must be at cold condition.

   If the measured rocker arm shaft run-out exceeds the specified limit, the rocker arm shaft must be replaced.

Rocker Arm Shaft Run-Out mm(in)

Standard	Limit
0.2 (0.008) or less	0.4 (0.016)

05040602

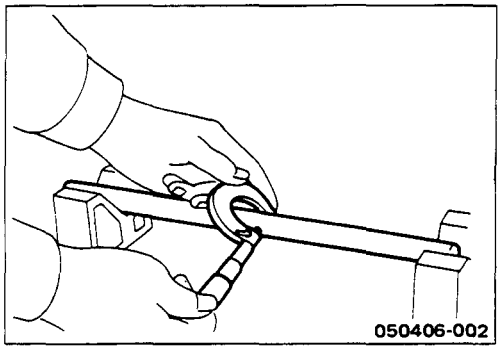

Rocker Arm Shaft Outside Diameter

Use a micrometer to measure the rocker arm fitting portion outside diameter.

If the measured value is less than the specified limit, the rocker arm shaft must be replaced.

Rocker Arm Shaft Outside Diameter mm(in)

Standard	Limit
20.5 (0.807)	20.35 (0.801)

0504060302A

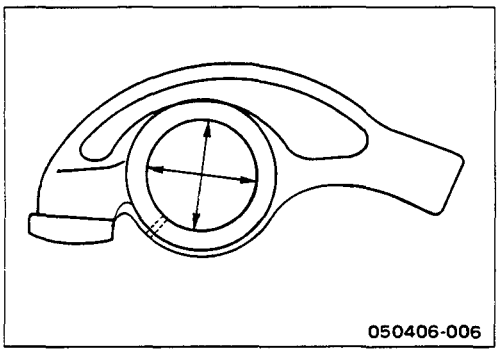

Rocker Arm Shaft and Rocker Arm Clearance

1. If the clearance between the rocker arm shaft inside diameter and the rocker arm shaft outside diameter (rocker arm fitting position diameter) exceeds the limit, the rocker arm and the rocker arm shaft must be replaced.

Rocker Arm and Rocker Arm Shaft Clearance mm(in)

Standard	Limit
0.005–0.045 (0.002–0.0018)	0.2 (0.008)

05040603B

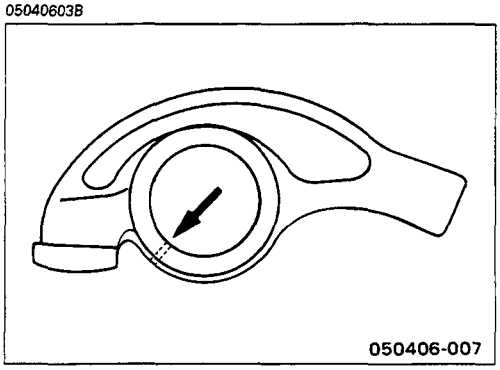

2. Check that the rocker arm oil port is free of obstructions.

   If necessary, use compressed air to clean the rocker arm oil port.

05040604

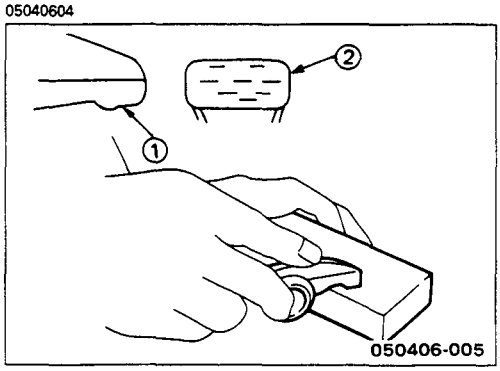

Rocker Arm Correction

Inspect the rocker arm valve stem contact surfaces for step wear ① and scoring ②.

If the contact surfaces have light step wear or scoring, they may be honed with an oil stone.

If the step wear or scoring is severe, the rocker arm must be replaced.

050407, 0504070102

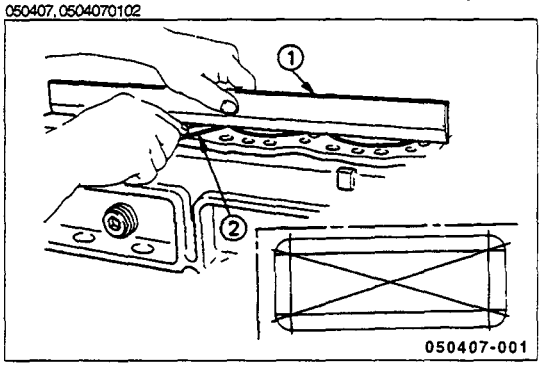

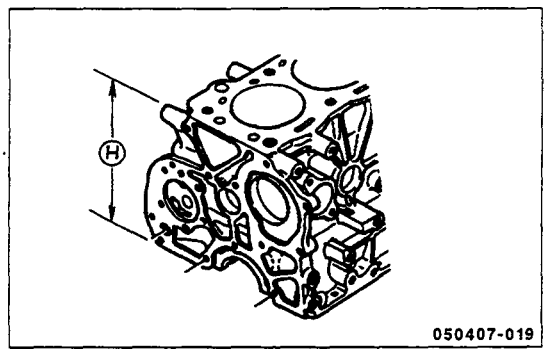

0504070201A, 0504070201B

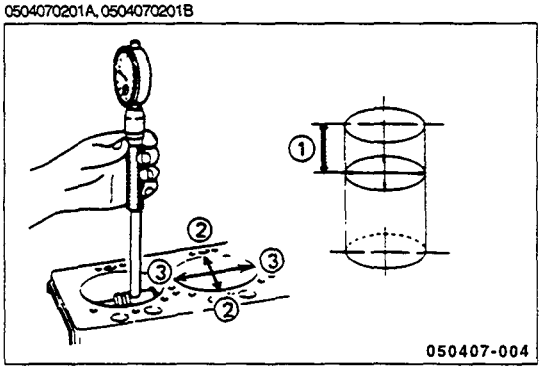

CYLINDER BODY

Cylinder Body Upper Face Warpage

Use a straight edge ① and a feeler gauge ② to measure the four sides and the two diagonals of the cylinder body upper face.

If the measured value is more than the limit, the cylinder body must be replaced.

Cylinder Body Upper Face Warpage mm(in)

Standard	Limit
0.05 or less	0.2 (0.008)

Cylinder Body HeightⒽ (Reference) mm(in)

	Standard
4ZC1	214.5 (8.445)
4ZE1	237.0 (9.390)

Note:

Never attempt to regrinding the cylinder body if the upper face warpage exceeds the limit.

Cylinder Bore Measurement

Use a cylinder indicator to measure the cylinder bore at measuring point ① in the thrust ② - ② and axial ③ - ③ directions of the crankshaft.

Measuring Point ① : Approximately 10 mm (0.39 in)

If the measured value exceeds the specified limit, the cylinder must be rebored.

Cylinder Bore mm(in)

	Standard	Limit
4ZC1	88.0 (3.465)	88.2 (3.472)
4ZE1	92.6 (3.645)	92.8 (3.653)

If there is scarring or scorching, the cylinder must be rebored.

Refer to "Cylinder Reboring Procedure".

If the measured cylinder bore exceeds the boring limit, the cylinder body must be replaced.

Boring Limit mm(in)

4ZC1	89.04 (3.506)
4ZE1	93.640 (3.6860)

Cylinder Reboring

If even one cylinder measurement exceeds the specified limit, all the cylinders must be rebored. Never rebore only one cylinder.

Step wear and carbon deposits on the upper portion of the cylinder wall can be removed with a ridge reamer before reboring.

05040704A

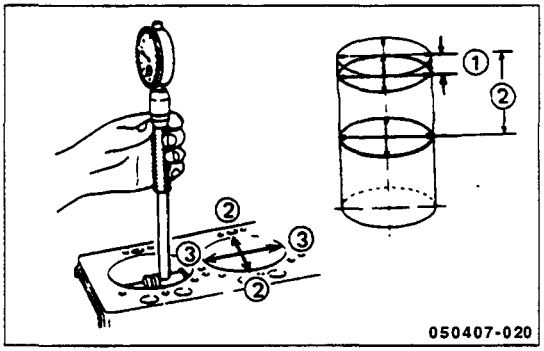

05040704B

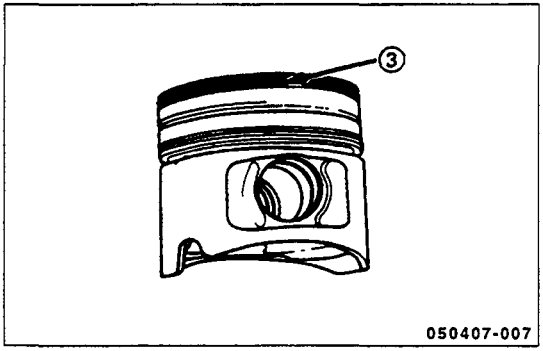

Cylinder Reboring Procedure

1. Preparation

   (1) Oversize Piston Selection

   Measure each cylinder bore.

   Measuring Point ①: 10 mm (0.39 in)
   Measuring Point ②: 70 mm (2.76 in)

   Oversize pistons are available in two sizes. Select the correct size after determining the largest cylinder bore.

Piston Oversize (Reference) mm(in)

	Standard	Limit
4ZC1	88.445-88.464 (3.4821-3.4828)	88.945-88.965 (3.5018-3.5026)
4ZE1	93.065-93.105 (3.6639-3.6655)	93.565-93.605 (3.6836-3.6852)

Oversize pistons have the "O/S" mark ③ at the topland.

Rebore the cylinders to fit the selected oversize piston outside diameter.

05040704C

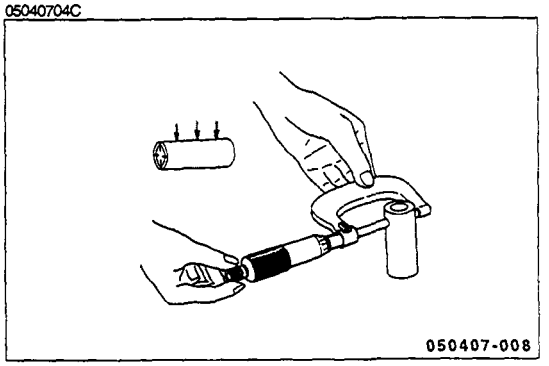

05040704D

(2) Cylinder Bore Selection

Measure the outside diameter of the selected oversize pistons at measuring point (at a right angle to the piston pin).

Piston Measuring Point: 40 mm (1.57 in: 4ZC1)
40 mm (1.57 in: 4ZE1)

Formula

Boring inside diameter = P + C – H
P = Piston outside diameter (Measured Oversize Piston)
C = Piston and cylinder bore clearance

Piston and Cylinder Bore Clearance	mm(in)
4ZC1	0.035-0.055 (0.0014-0.0022)
4ZE1	0.025-0.045 (0.0010-0.0018)

H = Honing allowance
0.03 (0.0012) or less

2. Reboring

Refer to "Cylinder Reboring".

3. Honing

All cylinders must be honed after reboring.

05040909

CAMSHAFT

Visually inspect the journals, the cams, the distributor drive gear, and the rocker arm shaft bracket for excessive wear and damage. The camshaft, the rocker arm shaft bracket, and the cylinder head must be replaced if these conditions are discovered during inspection.

Note:

The camshaft, the rocker arm shaft bracket, and the cylinder head must always be replaced as a set.

05040901

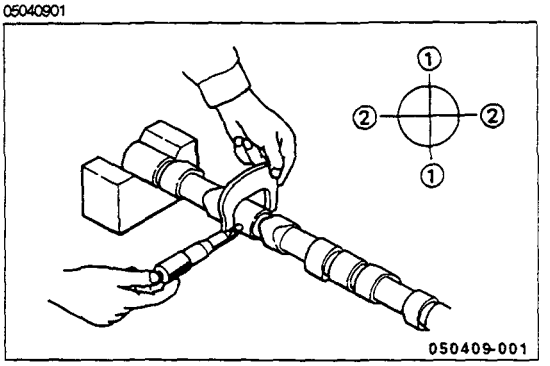

Camshaft Journal Diameter

Use a micrometer to measure each camshaft journal diameter in two directions (① and ②). If the measured value is less than the specified limit, the camshaft must be replaced.

Camshaft Journal Diameter	mm(in)
Standard	Limit
33.940 – 33.955 (1.336 – 1.337)	33.900 (1.334)

05040902

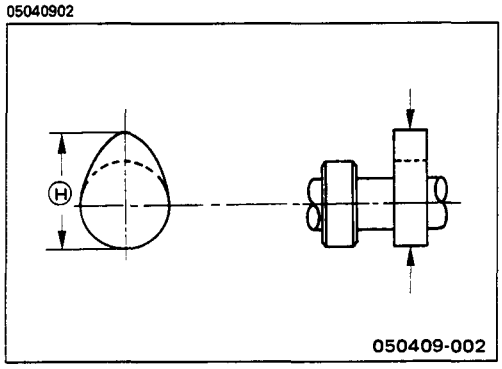

Cam Height

Measure the cam height Ⓗ with a micrometer. If the measured value is less than the specified limit, the camshaft must be replaced.

Cam Height Ⓗ	mm(in)
Standard	Limit
36.9 (1.45)	36.4 (1.43)

05040903

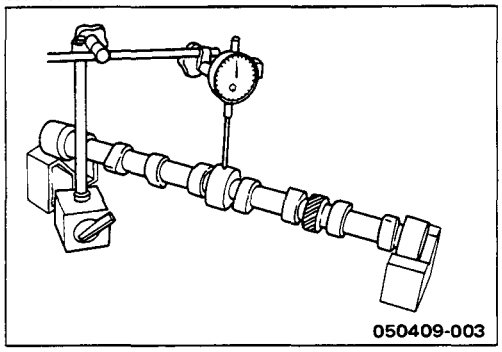

Camshaft Run-Out

1. Mount the camshaft on V-blocks.
2. Measure the run-out with a dial indicator.

   If the measured value exceeds the specified limit, the camshaft must be replaced.

Camshaft Run-Out	mm(in)
Standard	Limit
0.05 (0.002)	0.10 (0.004)

05040910A

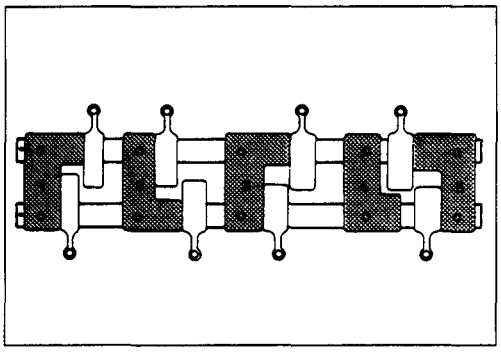

Camshaft Journal and Rocker Arm Shaft Bracket Clearance

1. Install the rocker arm shaft bracket to the cylinder head and tighten it to the specified torque.

Rocker Arm Shaft Bracket Nut Torque	kg·m(lb.ft/N·m)
Standard	
2.2 ± 0.25 (16.0 ± 1.8/21.5 ± 2.5)	

05040910B

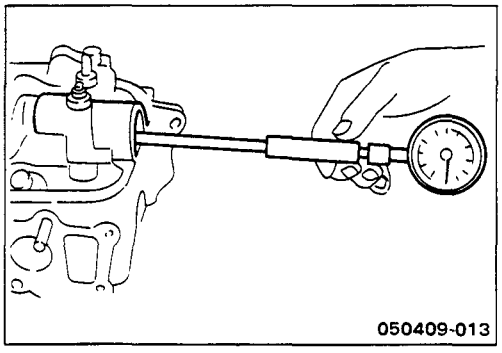

2. Use an inside dial indicator to measure the rocker arm shaft bracket inside diameter.

Rocker Arm Shaft Bracket Inside Diameter	mm(in)
Standard	
34.020 – 34.050 (1.3394 – 1.3405)	

If the clearance between the rocker arm shaft bracket inside diameter and the journal exceeds the specified limit, the camshaft and/or the cylinder head must be replaced.

Camshaft Journal and Rocker Arm Shaft Bracket Clearance	mm(in)
Standard	Limit
0.065 – 0.110 (0.0026 – 0.0043)	0.150 (0.006)

05040910C

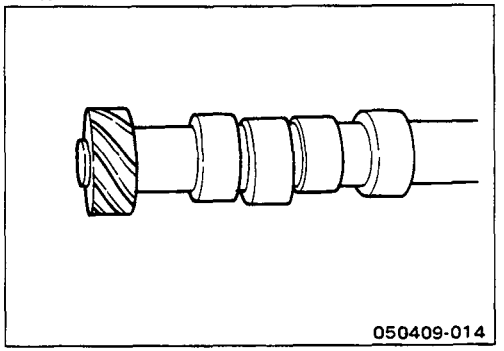

Distributor Drive Gear

Drive Gear Inspection

Visually inspect the drive gear for excessive wear and damage.

If excessive wear or damage is discovered during inspection, the camshaft must be replaced.

05041001

CRANKSHAFT AND BEARING

Inspect the surface of the crankshaft journals and crankpins for excessive wear and damage.

Inspect the oil seal fitting surfaces for excessive wear and damage.

Inspect the oil ports for obstructions.

05041002

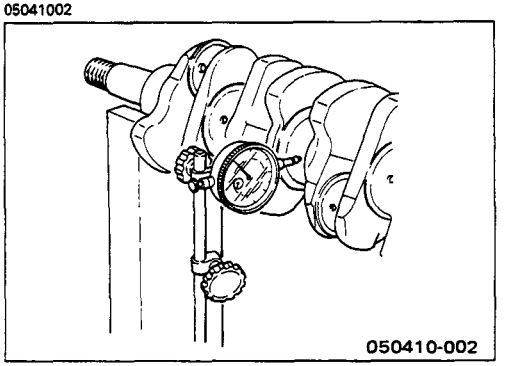

Crankshaft Run-Out

1. Set a dial indicator to the center of the crankshaft journal.
2. Gently turn the crankshaft in the normal direction of rotation.

   Read the dial indicator as you turn the crankshaft.
   If the measured value exceeds the specified limit, the crankshaft must be replaced.

Crankshaft Run-Out mm(in)

Standard	Limit
0.03 (0.012) or less	0.10 (0.004)

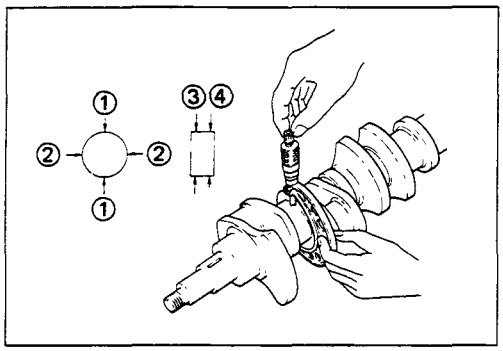

Crankshaft Journal and Crankpin Diameter

1. Use a micrometer to measure the crankshaft journal diameter across points ① – ① and ② – ②.
2. Use the micrometer to measure the crankshaft journal diameter at the two points (③ and ④).
3. Repeat Steps 1 and 2 to measure the crankpin diameter.

   If the measured values are less than the specified limit, the crankshaft must be reground or replaced.

Crankshaft Journal Diameter — mm(in)

Standard	Limit
55.920 – 55.935 (2.2016 – 2.2022)	55.420 (2.1819)

Crankpin Diameter — mm(in)

Standard	Limit
48.925 – 48.940 (1.9262 – 1.9268)	48.425 (1.9065)

Crankshaft Journal and Crankpin Uneven Wear — mm(in)

Limit
0.05 (0.002)

Crankshaft Bearing Selection

Crankshaft bearing selection is based on the measured diameters of the crankshaft journals and the bearing housings.

Match the crankshaft bearing housing grade marks and the crankshaft journal grade marks in the table below to determine the correct crankshaft bearing size.

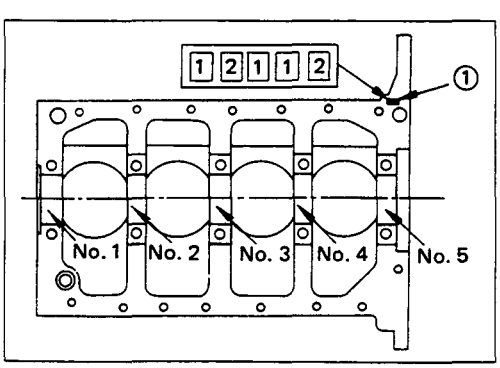

Crankshaft Bearing Housing Grade Mark

Crankshaft bearing housing grade marks [1] or [2] are stamped on the rear left-hand side of the cylinder body.

Example:

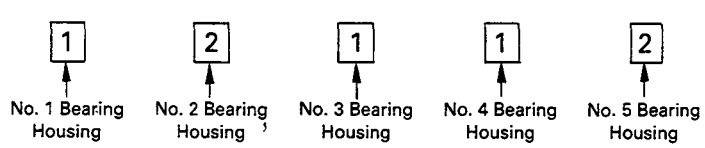

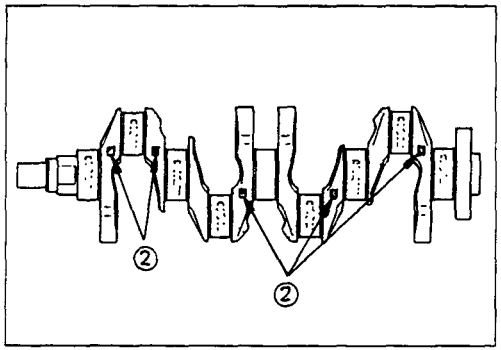

Crankshaft Journal Grade Mark

The crankshaft journal grade marks (1 or 2) are stamped on each crankshaft journal wave.

The crankshaft journal and bearing clearance must be the same for each position after installation of the crankshaft and the crankshaft bearings.

Crankshaft Bearing Selection Table

mm(in.)

① Size Mark	Cylinder Body Journal Diameter	Crankshaft Journal		Crankshaft Bearing	
		② Size Mark	Diameter	Thickness	Size Mark (Upper & Lower)
1	59.990–60.000 (2.3618–2.3622)	– – or 2	55.920–55.927 (2.2016–2.2018)	2.015–2.019 (0.0793–0.0795)	Blue
		– or 1	55.928–55.935 (2.2019–2.2022)	2.011–2.015 (0.0792–0.0793)	Black
2	59.980–59.989 (2.3614–2.3618)	– – or 2	55.920–55.927 (2.2016–2.2018)		
		– or 1	55.928–55.935 (2.2019–2.2022)	2.007–2.011 (0.0790–0.0792)	Brown
Under size 0.25	59.980–60.000 (2.3614–2.3622)		55.670–55.685 (2.1917–2.1923)	2.123–2.135 (0.0836–0.0841)	Stamp of size
Under size 0.50			55.420–55.435 (2.1819–2.1825)	2.248–2.260 (0.0885–0.0890)	

05041005

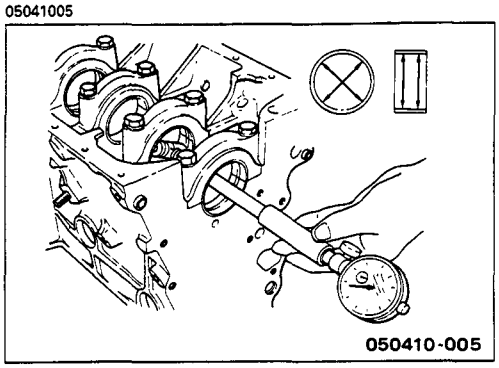

Crankshaft Journal and Bearing Clearance

If the clearance between the measured bearing inside diameter and the crankshaft journal diameter exceeds the specified limit, the crankshaft must be reground and undersize bearing installed or replaced.

Crankshaft Journal and Bearing Clearance mm(in)

Standard	Limit
0.023 – 0.050 (0.0009 – 0.0020)	0.12 (0.0047)

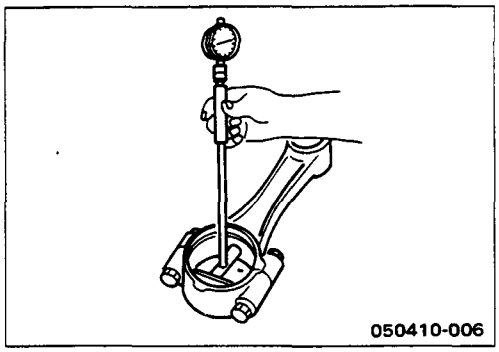

Connecting Rod Bearing Selection

Refer to the following table when installing or replacing the connecting rod bearings.

Pay close attention to the connecting rod big end grade mark ①.

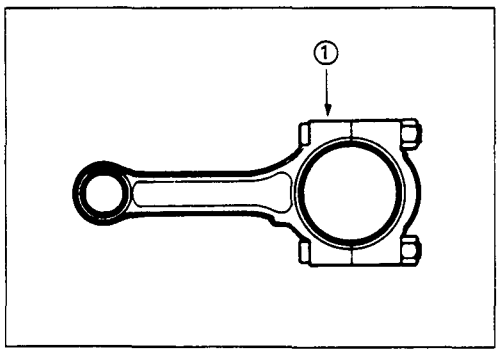

Connecting Rod Bearing Selection Table

mm(in.)

① Size Mark	Big end Bore Diameter	Crankshaft Pin Diameter	Connecting Rod Bearing	
			Thickness	Size Mark
A	51.996–52.000 (2.0471–2.0472)	48.925–48.940 (1.9262–1.9268)	1.509–1.513 (0.0594–0.0596)	Blue
B	51.988–51.995 (2.0468–2.0470)		1.505–1.509 (0.0592–0.0594)	Black
C	51.983–51.987 (2.0466–2.0467)		1.501–1.505 (0.0591–0.0592)	Brown
Under Size 0.25	51.983–52.000 (2.0466–2.0472)	48.675–48.690 (1.9163–1.9169)	1.623–1.635 (0.0639–0.0644)	Stamp of Size Mark
Under Size 0.50		48.425–48.440 (1.9065–1.9071)	1.748–1.760 (0.0688–0.0693)	

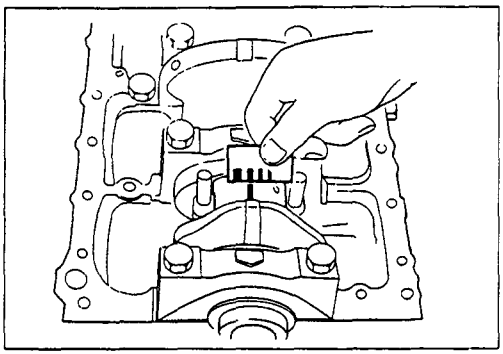

Crankpin and Bearing Clearance

If the clearance between the bearing inside diameter and the crankpin is greater than the standard but less than the limit, the crankshaft is serviceable.

If the clearance exceeds the limit, the crankshaft must be either reground or replaced.

If the crankshaft is reground, undersize bearings must also be installed.

Crankpin and Bearing Clearance mm(in)

Standard	Limit
0.030 – 0.060 (0.0012 – 0.0023)	0.12 (0.0047)

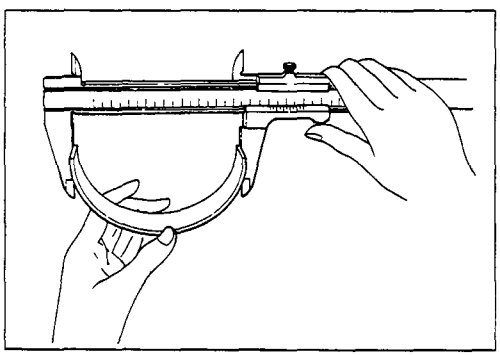

Bearing Spread

Use a vernier caliper to measure the bearing spread.
If the measured value is less than the specified limit, the bearing must be replaced.

Bearing Spread mm(in)

	Limit
Crankshaft Bearing	59.25 (2.333)
Connecting Rod Bearing	52.25 (2.057)

Check the bearing play.

Crankshaft Regrinding

To ensure crankshaft reliability, pay close attention to the following items during and after the crankshaft journal and crankpin regrinding procedure.

Undersize Bearing Availability mm(in)

0.25 (0.01) & 0.50 (0.02)

Crankshaft Journal and Crankpin Grinding Limit (Reference) mm(in)

Crankshaft Journals	55.435 (2.1825)
Crankpins	48.440 (1.9071)

Crankshaft Regrinding Procedure

1. Regrind the crankshaft journals and the crankpins.
2. Fillet the crankshaft journal radiuses to a minimum of R 2.7 ± 0.2 mm (0.1063 ± 0.0079 in).

   There must be no stepping around the fillet area.
3. Finish the crankshaft journals, the crankpins, and the oil port corners to a smooth surface having a chamfer radius of 1 mm (0.04 in).

Crankshaft Journal and Crankpin Roughness	mm(in)
0.001 (0.00004) or less	

4. Check the crankshaft journal and crankpin clearance.

   Refer to "Crankshaft Journal and Bearing Clearance" and "Crankpin and Bearing Clearance".
5. Check the crankshaft run-out.

   Refer to "Crankshaft Run-Out".

05041008, 0504100801A

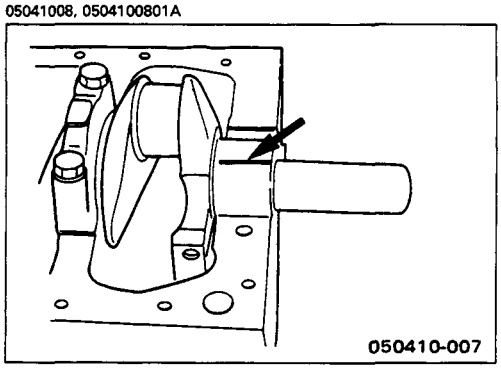

Clearance Measurements (With Plastigage)

Crankshaft Journal and Bearing Clearance

1. Clean the cylinder body, the journal bearing fitting surface, the bearing caps, and the bearings.
2. Install the bearings to the cylinder body.
3. Carefully place the crankshaft on the bearings.
4. Rotate the crankshaft approximately 30° to seat the bearing.
5. Place the Plastigage (arrow) over the crankshaft journal across the full width of the bearing.
6. Install the bearing caps with the bearing.

0504100801B

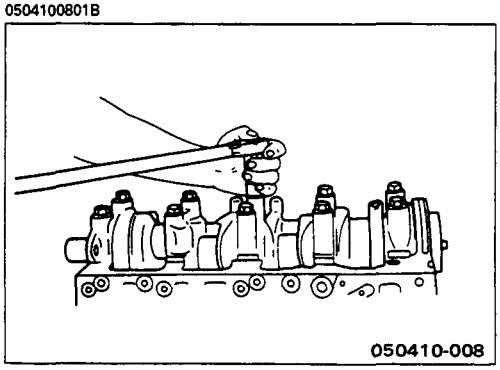

7. Tighten the bearing caps to the specified torque.

Crankshaft Bearing Cap Bolt Torque	kg·m(lb.ft/N·m)
10.0 ± 1.5 (72.3 ± 10.8/98.0 ± 14.7)	

Do not allow the crankshaft to turn during bearing cap installation and tightening.

8. Remove the bearing cap.

0504100801C, 0504100801D

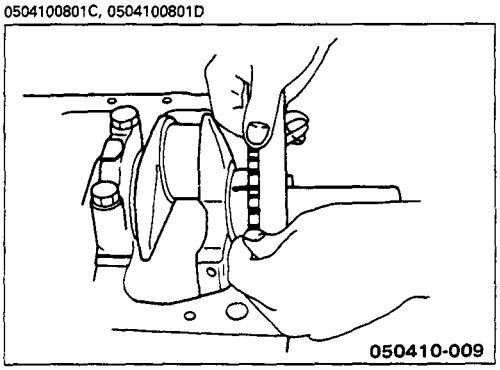

9. Compare the width of the Plastigage attached to either the crankshaft or the bearing against the scale printed on the Plastigage container.

   If the measured value exceeds the limit, perform the following additional steps.

   1) Use a micrometer to measure the crankshaft outside diameter.
   2) Use an inside dial indicator to measure the bearing inside diameter.

      If the crankshaft journal and bearing clearance exceeds the limit, the crankshaft and/or the bearing must be replaced.

Crankshaft Journal and Bearing Clearance mm(in)

Standard	Limit
0.023 – 0.050 (0.0009 – 0.0020)	0.12 (0.0047)

0504100802A, 0504100802B, 0504100802C

Crankpin and Bearing Clearance

1. Clean the crankshaft, the connecting rod, the bearing cap, and the bearings.
2. Install the bearing to the connecting rod and the bearing cap.

   Do not allow the crankshaft to move when installing the bearing cap.
3. Prevent the connecting rod from moving.
4. Attach the Plastigage to the crankpin.

   Apply engine oil to the Plastigage to keep it from falling.

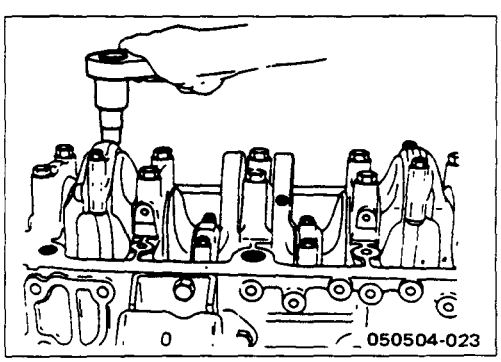

5. Install the bearing cap and tighten it to the specified torque.
   Do not allow the connecting rod to move when installing and tightening the bearing cap.

Connecting Rod Bearing Cap Bolt
Torque kg·m(lb.ft/N·m)

4ZC1/4ZD1/4ZE1	6.0±0.2 (43.4±1.4/58.9±2.0)

6. Remove the bearing cap.

7. Compare the width of the Plastigage attached to either the crankshaft or the bearing against the *scale printed on the Plastigage container.*

   If the measured value exceeds the specified limit, perform the following additional steps.

   1) Use a micrometer to measure the crankpin outside diameter.
   2) Use an inside dial indicator to measure the bearing inside diameter.

      If the crank pin and bearing clearance exceeds the specified limit, the crankshaft and/or the bearing must be replaced.

Crankpin and Bearing Clearance mm(in)

Standard	Limit
0.030 – 0.060 (0.0012 – 0.0023)	0.12 (0.0047)

050411

CRANKSHAFT PILOT BEARING

Check the crankshaft pilot bearing for excessive wear and damage and replace it if necessary.

05041101, 0504110101

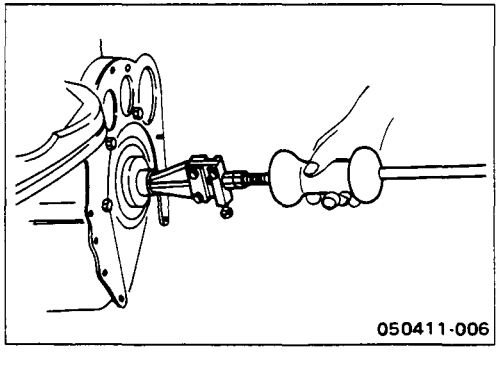

Crankshaft Pilot Bearing Replacement

Crankshaft Pilot Bearing Removal

Use the pilot bearing remover to remove the crankshaft pilot bearing.

Pilot Bearing Remover: 5-8840-2000-0 (J-5822)
Sliding Hammer: 5-8840-0019-0 (J-23907)

0504110102

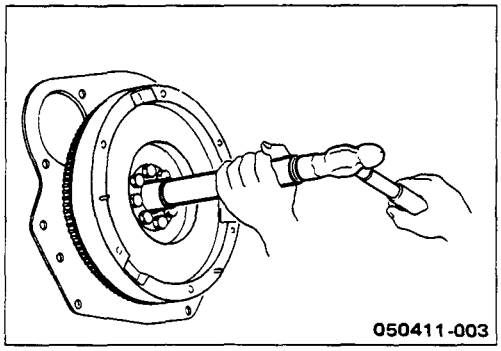

Crankshaft Pilot Bearing Installation

1. Place the crankshaft pilot bearing horizontally across the crankshaft bearing installation hole.
2. Tap around the edges of the crankshaft pilot bearing outer races with a brass hammer to drive the bearing into the crankshaft bearing installation hole.

   Pilot Bearing Installer: 5-8522-0125-0 (J-26516-A)

050412, 05041201

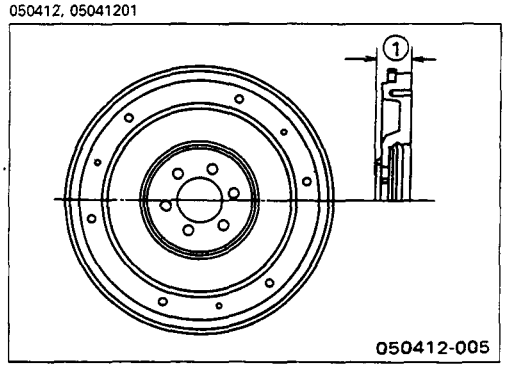

FLYWHEEL AND RING GEAR

Flywheel

1. Inspect the flywheel friction surface for excessive wear and heat cracks.
2. Measure the flywheel width.

   If the measured value is between the standard and the specified limit, the flywheel may be reground.

   If the measured value exceeds the specified limit, the flywheel must be replaced.

Flywheel Width ①	mm(in)
Standard	Limit
43.45 (1.711)	42.45 (1.671)

Flywheel Friction Surface Roughness	mm(in)
Less than 0.006 (0.00024)	

05041202

Ring Gear

Inspect the ring gear.

If the ring gear teeth are broken or excessively worn, the ring gear must be replaced.

05041203, 0504120301

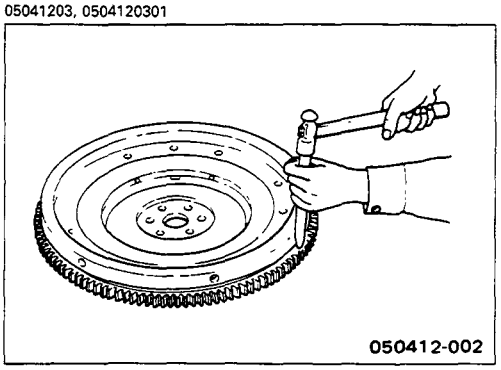

Ring Gear Replacement

Ring Gear Removal

Strike around the edges of the ring gear with a hammer and chisel to remove it.

0504120302

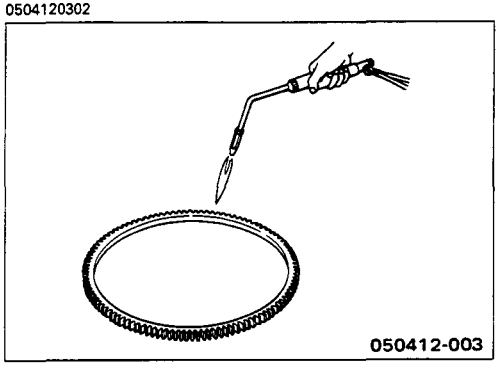

Ring Gear Installation

1. Heat the ring gear evenly with a gas burner to expand it.

   Do not allow the temperature of the gas burner to exceed 200°C (390°F).

2. Install the ring gear when it is sufficiently heated.

   The ring gear must be installed with the chamfer facing the clutch.

050414, 05041401A

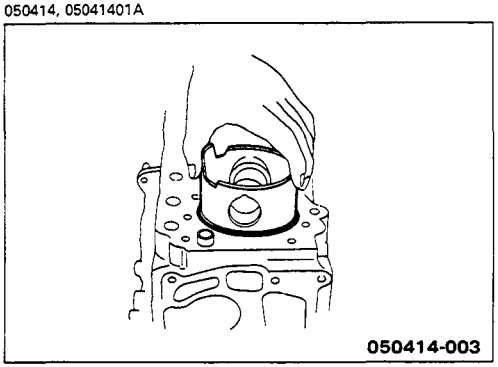

PISTON RING

Piston Ring Gap

1. Insert the piston ring horizontally (in the position it would assume if it were installed to the piston) into the cylinder bore.

05041401B

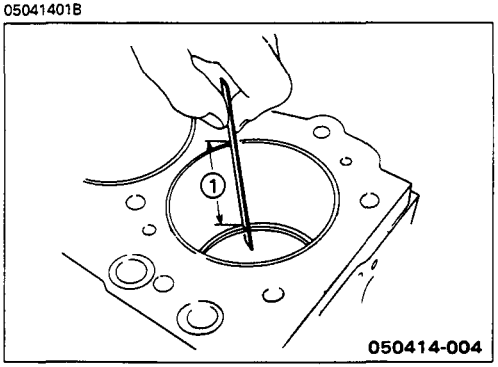

05041401C

2. Push the piston ring into the cylinder bore until it reaches the point ① where the cylinder bore is the smallest.

   Do not allow the piston ring to slant to one side or the other. It must be perfectly horizontal.

   Measuring Point ①: 70 mm (2.76 in)

3. Use a feeler gauge to measure the piston ring gap.

   If the measured value exceeds the specified limit, the piston ring must be replaced.

Piston Ring Gap — mm(in)

	Standard	Limit
1st Compression Ring	0.30–0.45 (0.012–0.018)	1.50 (0.059)
2nd Compression Ring	0.25–0.40 (0.010–0.016)	
Oil Ring	0.20–0.70 (0.008–0.028)	

05041402A

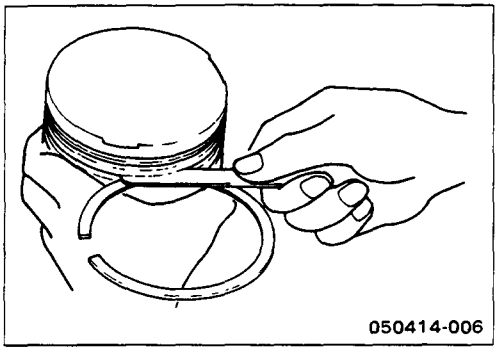

Piston Ring and Piston Ring Groove Clearance

Use a feeler gauge to measure the clearance between the piston ring and the piston ring groove at several points around the piston.

If the clearance between the piston ring and the piston ring groove exceeds the specified limit, the piston ring must be replaced.

Piston Ring and Piston Ring Groove Clearance mm(in)

	Standard	Limit
1st Compression Ring	0.025–0.060 (0.0010–0.0024)	0.150 (0.0059)
2nd Compression Ring	0.020–0.055 (0.0008–0.0022)	0.150 (0.0059)

050415, 05041501

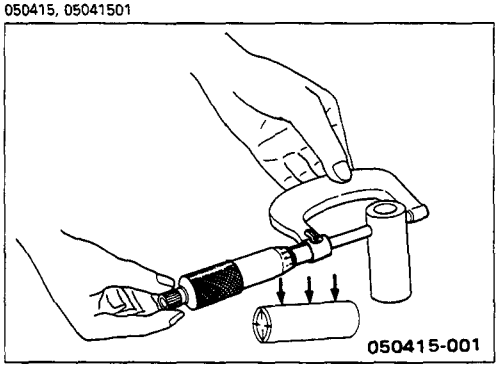

PISTON PIN

Piston Pin Diameter

Use a micrometer to measure the piston pin outside diameter at several points.

If the measured value is less than the specified limit, the piston pin must be replaced.

Piston Pin Diameter mm(in)

Standard		Limit
4ZD1/4ZE1	22.997–23.005 (0.9054–0.9057)	22.970 (0.9043)
4ZC1	21.997–22.005 (0.8660–0.8663)	21.970 (0.8650)

050416, 05041601

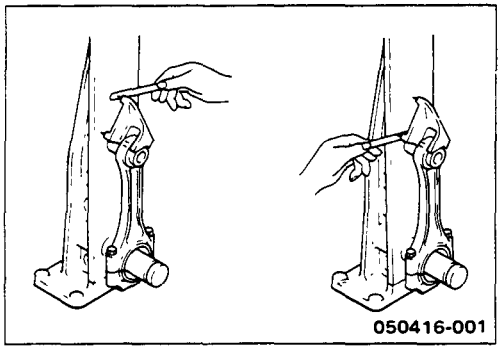

CONNECTING ROD

Connecting Rod Alignment

Use a connecting rod aligner to measure the distortion and the parallelism between the connecting rod big end hole and the connecting rod small end hole.

If either the measured distortion or parallelism exceed the specified limit, the connecting rod must be replaced.

Per Length of 100 mm (3.94 in) mm(in)

	Standard	Limit
Distortion	0.05 (0.002)	0.20 (0.008)
Parallelism	0.05 or Less (0.002)	0.15 (0.006)

05041602

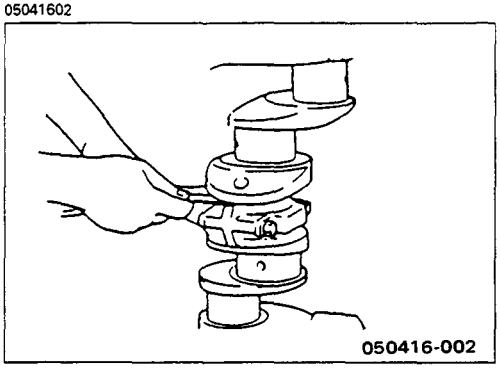

Connecting Rod Side Face Clearance

1. Install the connecting rod to the crankpin.
2. Use a feeler gauge to measure the clearance between the connecting rod big end side face and the crankpin side face.

   If the measured value exceeds the specified limit, the connecting rod must be replaced.

Connecting Rod Big End and Crankpin Side Face Clearance mm(in)

Standard	Limit
0.20 – 0.33 (0.008 – 0.013)	0.35 (0.014)

05041602

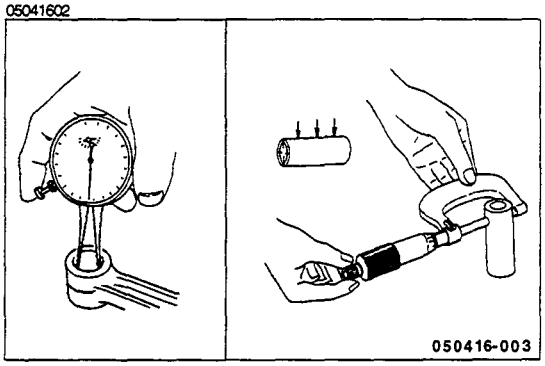

Piston Pin and Connecting Rod Small End Interference

1. Use a calliper calibrator and a dial indicator to measure the connecting rod small end diameter.

Connecting Rod Small End Diameter	mm(in)
4ZE1	22.964-22.977 (0.9041-0.9046)
4ZC1	21.964-21.977 (0.8647-0.8652)

2. Determine the piston pin and connecting rod small end interference.

Piston Pin and Connecting Rod Small End Interference mm(in)
0.020 – 0.041 (0.008 – 0.0016)

05041901, 0504190101

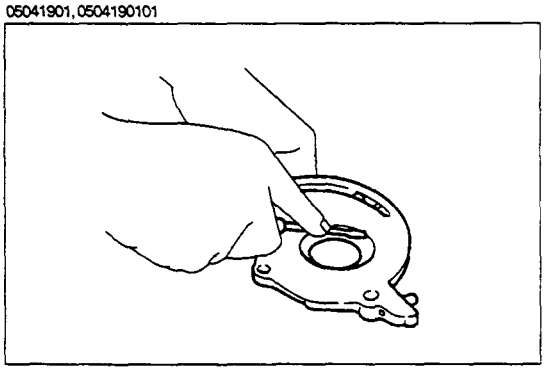

FRONT OIL SEAL RETAINER

Crankshaft Front Oil Seal Replacement Oil Seal Removal

Use a screwdriver to pry the oil seal free from the front oil seal retainer.

0504190102

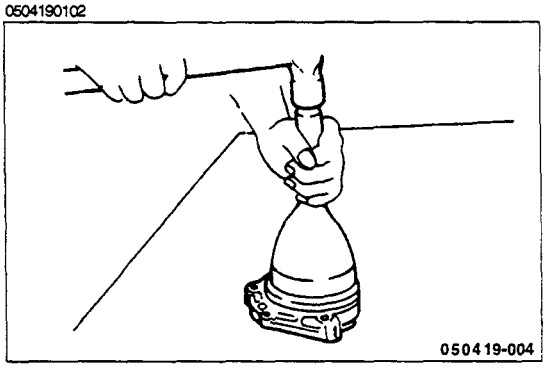

Oil Seal Installation

Apply engine oil to new oil seal and install it using installer.

050421, 05042101A

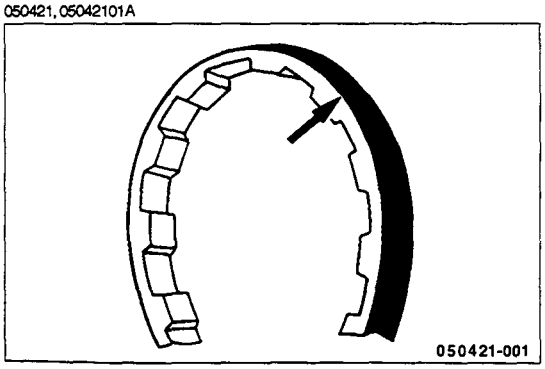

TIMING BELT

Timing Belt Handling Precautions

1. Do not bend the belt to a radius of less than 20 mm (0.79 in).

   Do not violently twist or bend the belt. Doing so will damage the glass fibre imbedded in the belt. Timing belt precision will be adversely affected.

05042101B

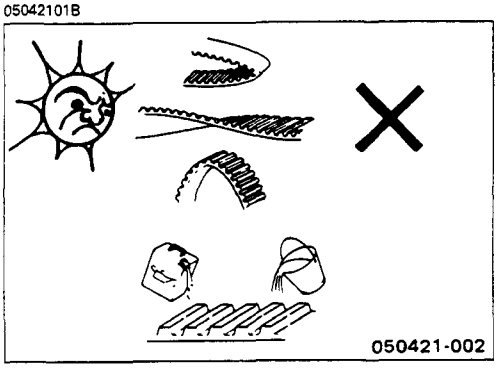

2. Do not store the belt in direct sunlight or in an area where it will be exposed to high temperatures.
3. Do not allow the stored belt to become dirty.
4. Do not use sharp metal tools to stretch or force the belt into position during installation.

05042101C

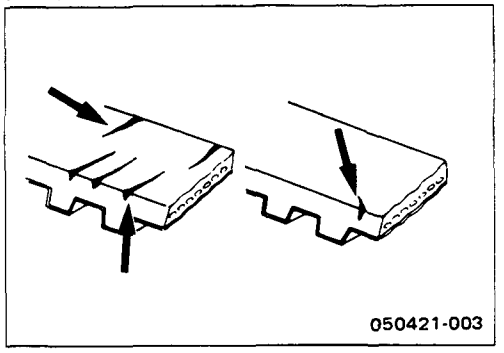

Timing Belt Inspection

1. Replace the belt if cracks are found in the side and rear face gum.

05042101D

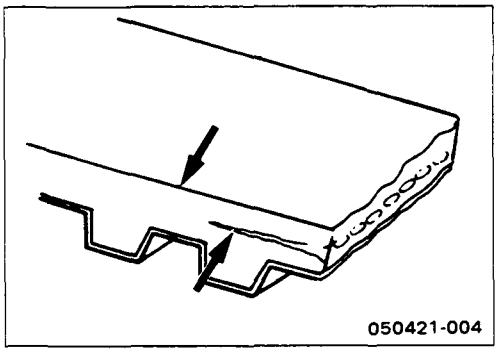

2. Replace the belt if the side faces are excessively worn.

   Check also for manufacturing defects, rounded belt edges, and loose glass fiber.

05042101E

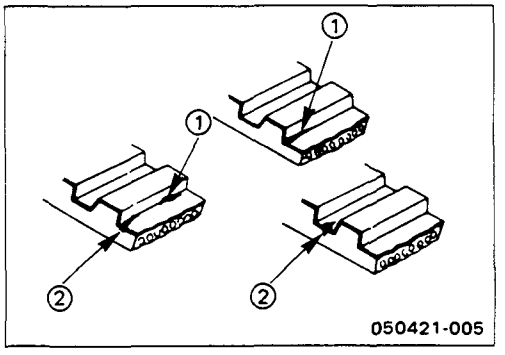

3. Replace the belt if the fabric is cracked ① or disintegrated ②.

05042101F

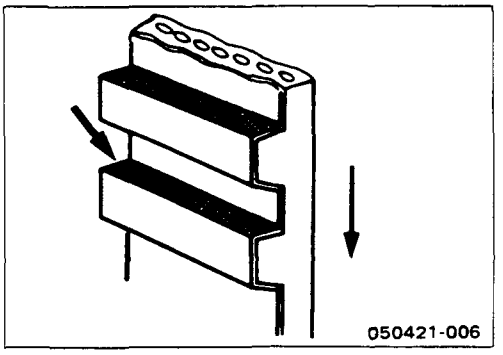

4. Replace the belt if the cogs are excessively worn.

   Check the loaded side of the cogs for fuzzing, discoloration, and baldness.

05050501

REASSEMBLY

INTERNAL PARTS

MINOR COMPONENTS

ROCKER ARM SHAFT AND ROCKER ARM

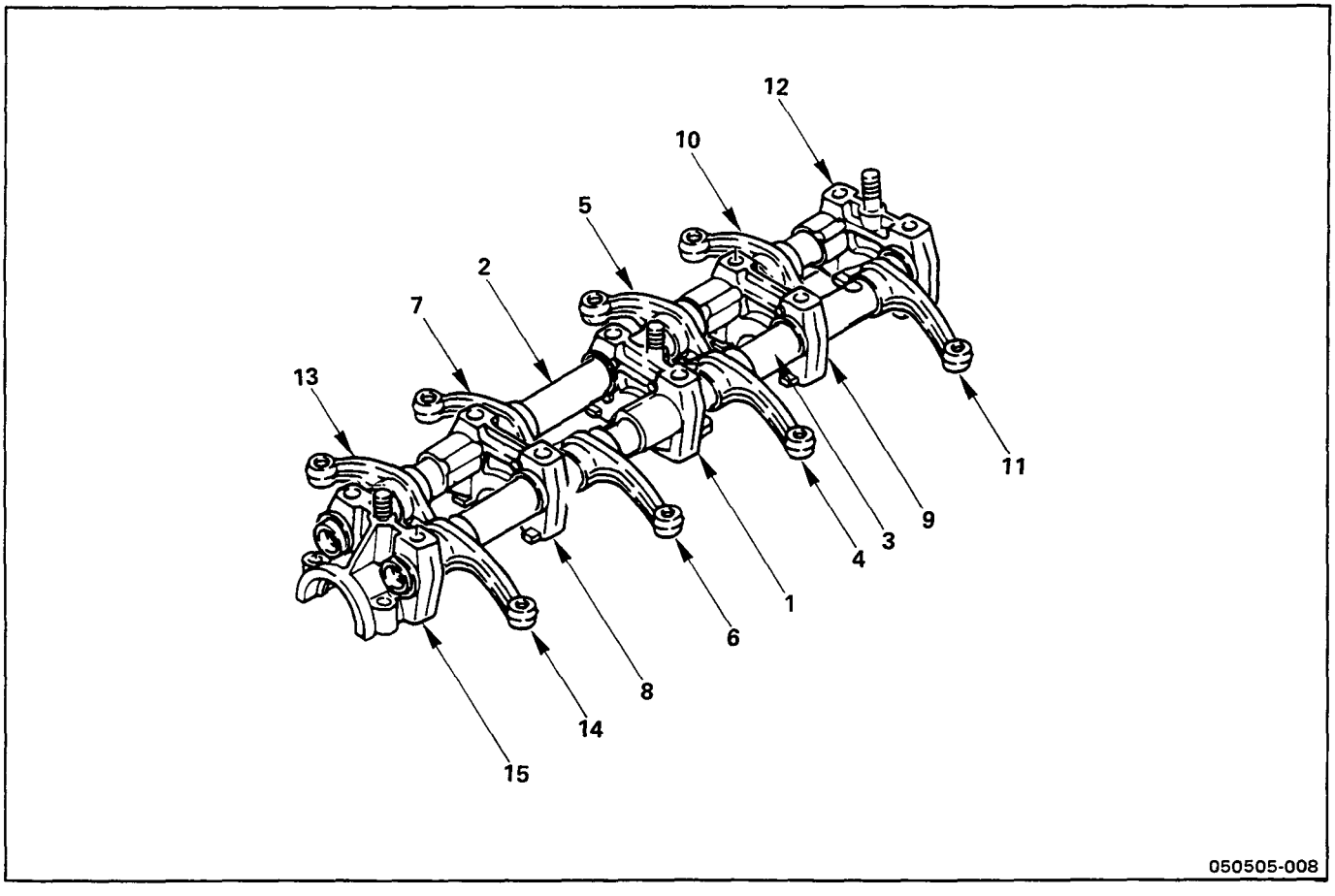

0505000002B

Reassembly Steps

- ▲ 1. No. 3 rocker arm shaft bracket
- ▲ 2. Rocker arm shaft (Intake side)
- ▲ 3. Rocker arm shaft (Exhaust side)
- ▲ 4. No. 3 exhaust valve rocker arm
- 5. No. 3 intake valve rocker arm
- 6. No. 2 exhaust valve rocker arm
- 7. No. 2 intake valve rocker arm
- 8. No. 2 rocker arm shaft bracket
- 9. No. 4 rocker arm shaft bracket
- 10. No. 4 intake valve rocker arm
- 11. No. 4 exhaust valve rocker arm
- 12. No. 5 rocker arm shaft bracket
- 13. No. 1 intake valve rocker arm
- 14. No. 1 exhaust valve rocker arm
- 15. No. 1 rocker arm shaft bracket

05050001, 0505000102A

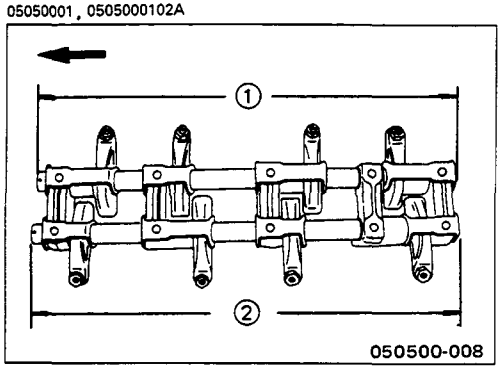

Important Operations

1. Rocker Arm Shaft Bracket

2., 3. Rocker Arm Shaft (Intake and Exhaust)

1) Apply a coat of engine oil to the rocker arm shafts, the shaft brackets, and the rocker arms.

2) Install the shorter rocker arm shaft to the No. 3 bracket intake side.

   The punch mark must be facing the front of the engine.

   ① Intake Side Shaft (1): 388 mm (15.28 in)

0505000102C

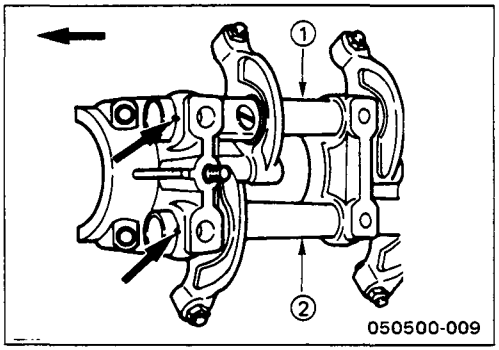

3) Install the longer rocker arm shaft to the No. 3 bracket exhaust side.

   The punch mark must be facing the front of the engine.

   ② Exhaust Side Shaft (2): 391 mm (15.40 in)

0505000102B

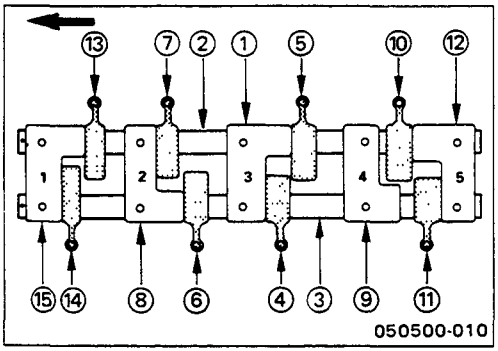

4. Rocker Arm

Install the brackets and the rocker arms to the rocker arm shafts in the sequence as shown in the illustration.

05050502

CYLINDER HEAD WITH ROCKER ARM SHAFT AND CAMSHAFT

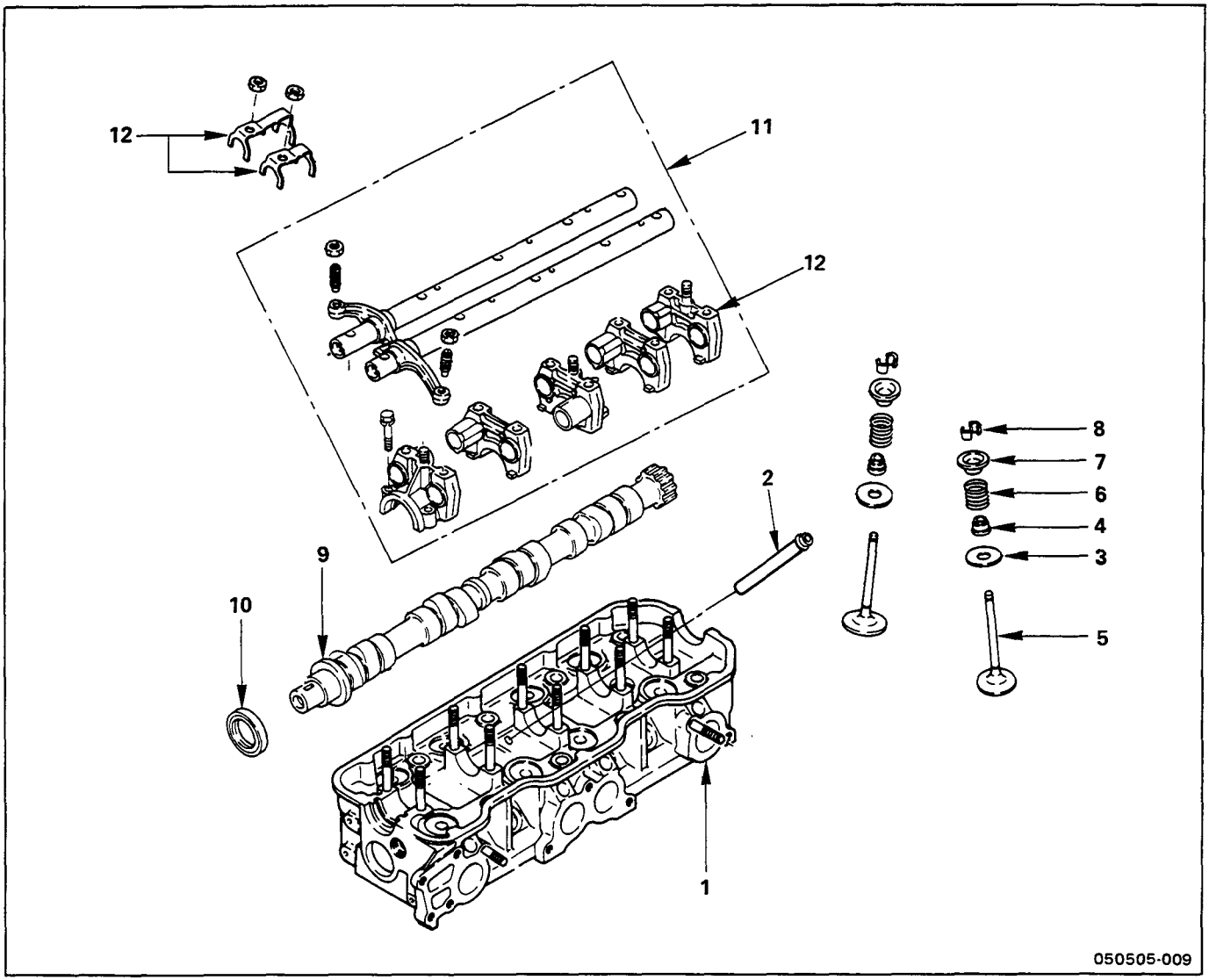

0505010002B

Reassembly Steps

1. Cylinder head
2. Fuel pump push rod
3. Valve spring lower seat
▲ 4. Valve stem oil seal
▲ 5. Intake and exhaust valve
▲ 6. Valve spring
7. Valve spring upper seat
▲ 8. Split collar
▲ 9. Camshaft
▲ 10. Camshaft front oil seal
11. Rocker arm shaft and rocker arm
▲ 12. Rocker arm shaft bracket nut and spring (No.1 - No.4)

05050101

Important Operations

050501010101

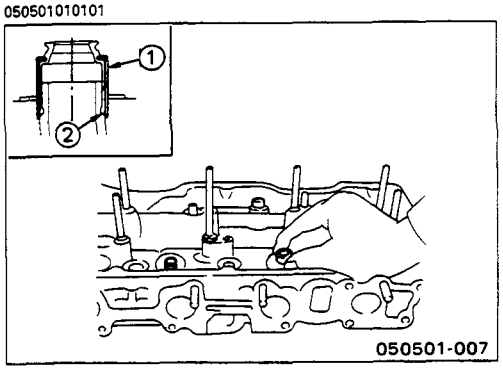

4. Valve Stem Oil Seal

1) Apply a coat of engine oil to the oil seal inner face.
2) Carefully insert the oil seal ① to the valve guide ② groove.

0505010102

5. Intake and Exhaust Valve

1) Apply a coat of engine oil to each valve stem before installation.
2) Install the intake and exhaust valves.
3) Turn the cylinder head up to install the valve springs.

   Take care not to allow the installed valves to fall free.

050501010302

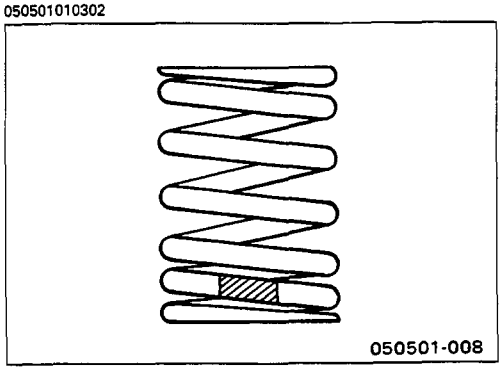

6. Valve Spring

Install the valve spring with the fine pitched end (painted) facing down.

050501010104

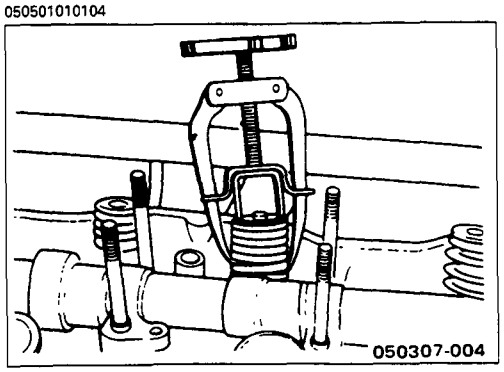

8. Split Collar

1) Use the spring compressor to compress the valve spring into position.

   Spring Compressor: 5-8840-0205-0 (J-26513-A)
2) Install the split collar to the valve stem.
3) Set the split collar by tapping around the collar head with a rubber hammer.

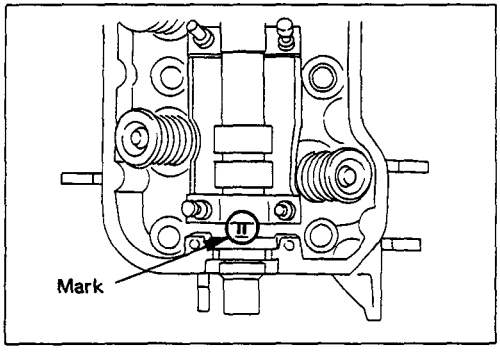

050506010401

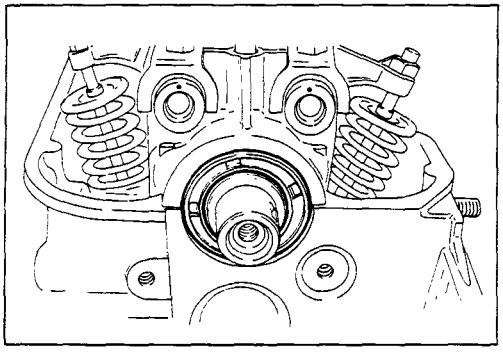

050504011902

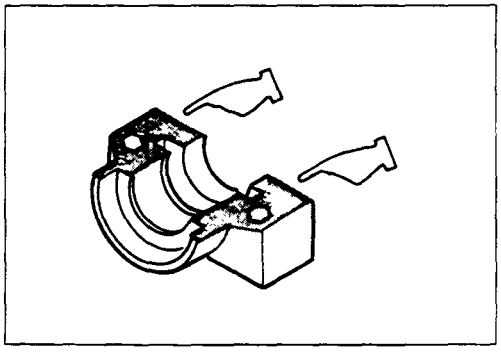

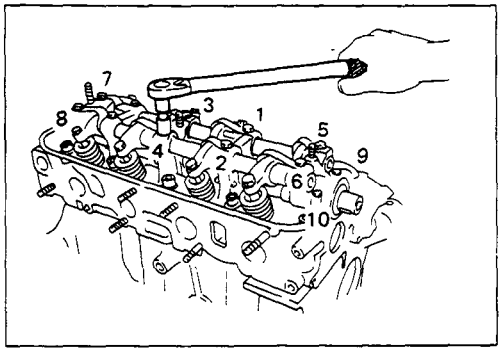

9. Camshaft

1) Apply engine oil to the cylinder head and camshaft journals.
2) Set the camshaft to the cylinder head.
   The camshaft mark must be facing up.

10. Camshaft Front Oil Seal

1) Apply engine oil to the oil seal lip circumference.
2) Use the oil seal installer to install the oil seal.
   Oil Seal Installer: 5-8840-0144-0 (J-33183)

12. Rocker Arm Shaft Bracket Nut and Spring

1) Apply silicon gasket beforehand to the front side of the fitting surface of No. 1 rocker arm bracket with the cylinder head.
2) Apply engine oil to the rocker arm bracket stud bolts and nuts.
3) Tighten the rocker arm shaft bracket bolts in the numerical order shown in the illustration.

Rocker Arm Shaft Bracket Nut Torque	kg·m(lb.ft/N·m)
No. 1 – 8	2.2 ± 0.25 (16.0 ± 1.8/21.6 ± 2.5)
No. 9 & 10	0.75 ± 0.15 (4.3 ± 1.1/5.9 ± 1.5)

After assembly apply lubricate the rocker arm shaft and valves with engine oil.

050502A

PISTON AND CONNECTING ROD

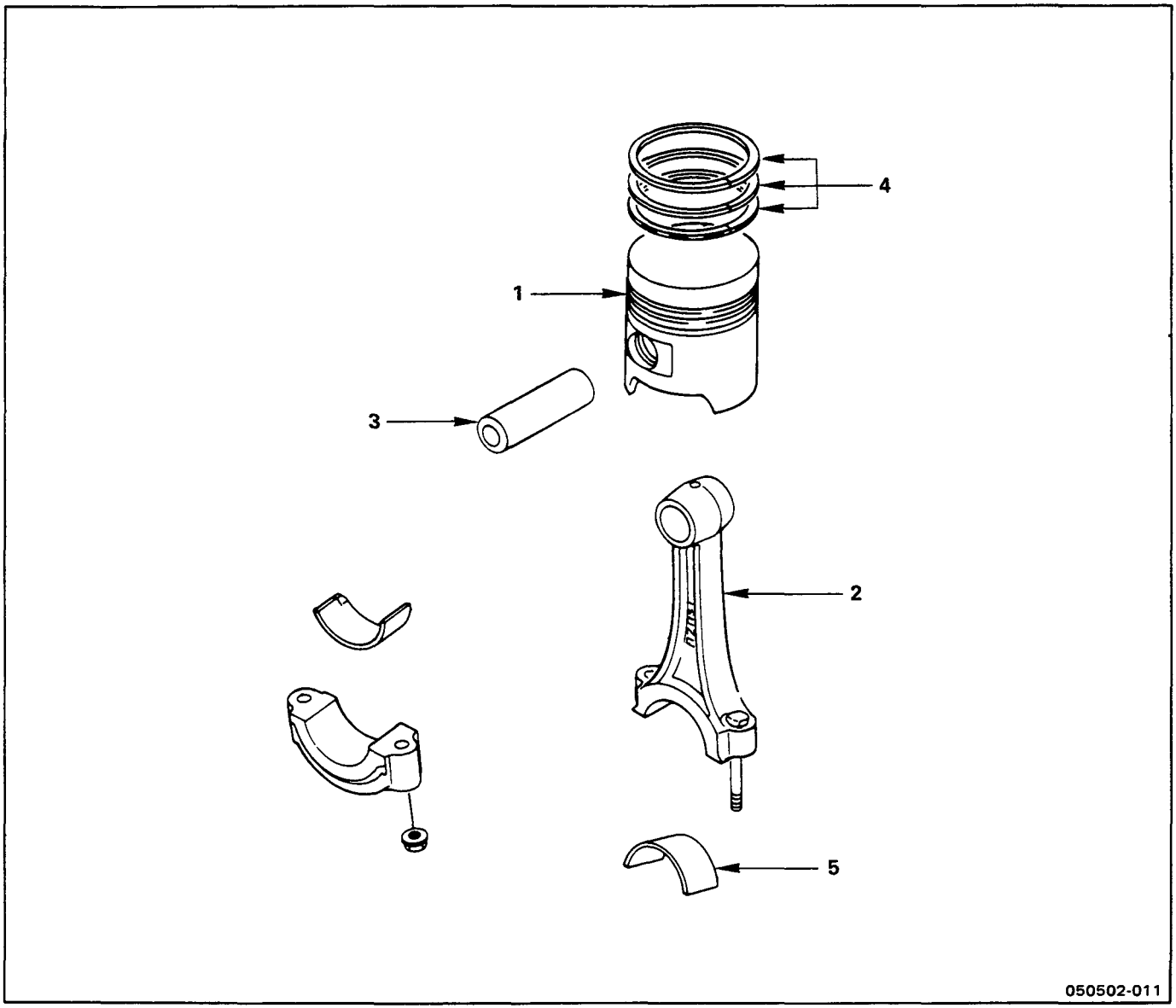

05050201B

Reassembly Steps

- ▲ 1. Piston
- ▲ 2. Connecting rod
- ▲ 3. Piston pin
- ▲ 4. Piston ring
- ▲ 5. Connecting rod bearing

Important Operations

050502010101A

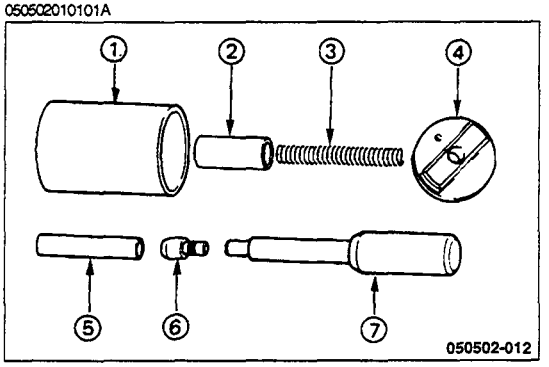

1. Piston
2. Connecting Rod
3. Piston Pin

Piston Pin Replacement Using The Special Tool
Piston Pin Replacer: 5-8840-0361-0 (4ZE1)

① Body
② Spring guide
③ Spring
④ Adapter
⑤ Installation
⑥ Removal guide
⑦ Driver handle

050502010101B

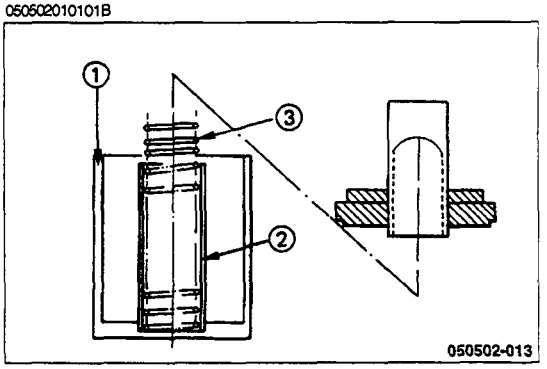

Piston Pin Installation Procedure

1) Apply a coat of engine oil to the piston pin, the piston, and the connecting rod.
2) Set the spring guide ② and the spring ③ to the body ①.
3) Insert the installation guide ⑤ from the bottom of theadapter ④.
4) Set the adapter together with the installation guide to the top of the body.

050502010101C

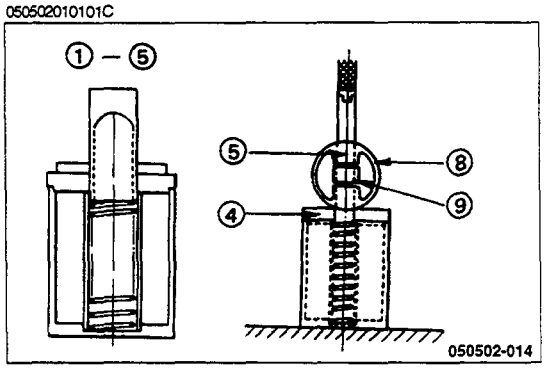

5) Place the assembled tools ① - ⑤ on a bench press.
6) Set the piston ⑧ and the connecting rod ⑨ to the portion of the installation guide ⑤ protruding from the adapter ④.

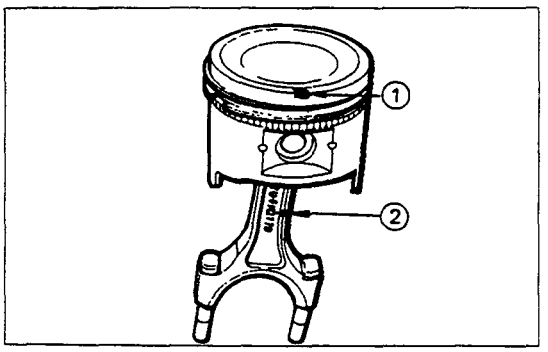

Align the piston head front mark ① and the connecting rod "ISUZU" casting mark ②. Both marks must be facing the same direction.

050502010101D

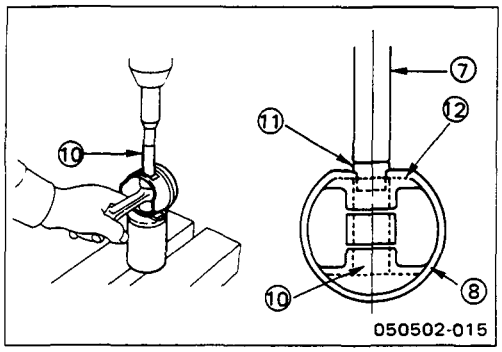

7) Set the piston pin ⑩ against the piston pin hole.
8) Set the driver handle ⑦ against the piston pin.
9) Use the bench press to slowly force the piston pin into the piston pin hole until the driver handle setting mark ⑪ is perfectly flush with the piston boss outside surface ⑫.
10) Check that the connecting rod moves smoothly.

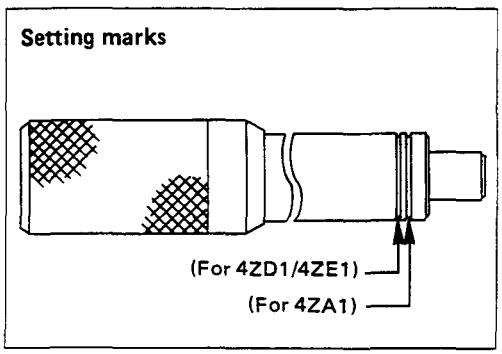

0505020103A, 0505020103B

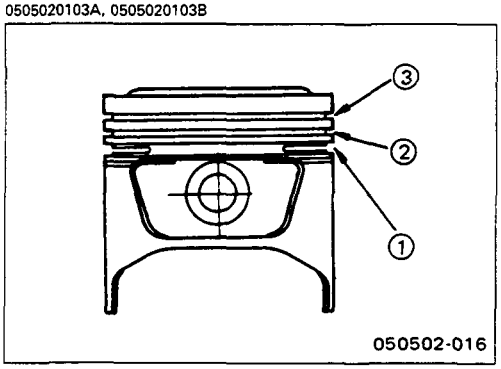

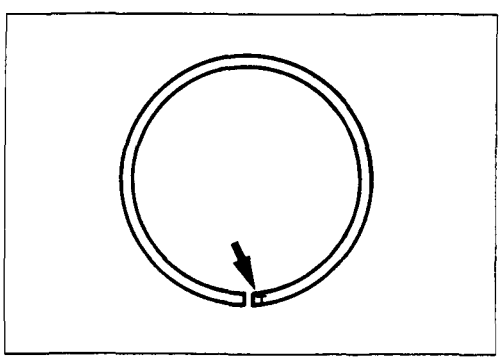

4. Piston Ring

1) Use a piston ring replacer to install the three piston rings.

   Piston Ring Replacer

   Install the piston rings in the order shown in the illustration.

   ① Oil ring
   ② 2nd compression ring
   ③ 1st compression ring

Note:

Install the compression rings with the stamped side facing up. (1st ring is T, 2nd ring is 2T)

2) Apply engine oil to the piston ring surfaces.
3) Check that the piston rings rotate smoothly in the piston ring grooves.

0505020104

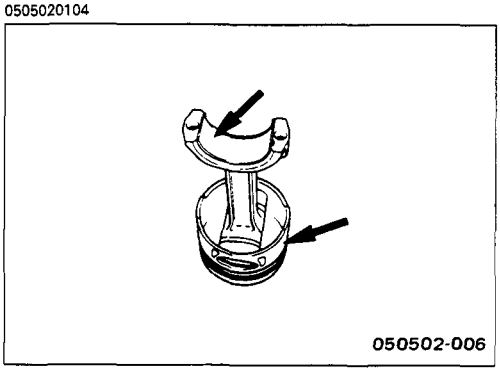

5. Connecting Rod Bearing

Carefully wipe any oil or other foreign material from the connecting rod bearing back face and the connecting rod bearing fitting surface.

050506A

MAJOR COMPONENTS

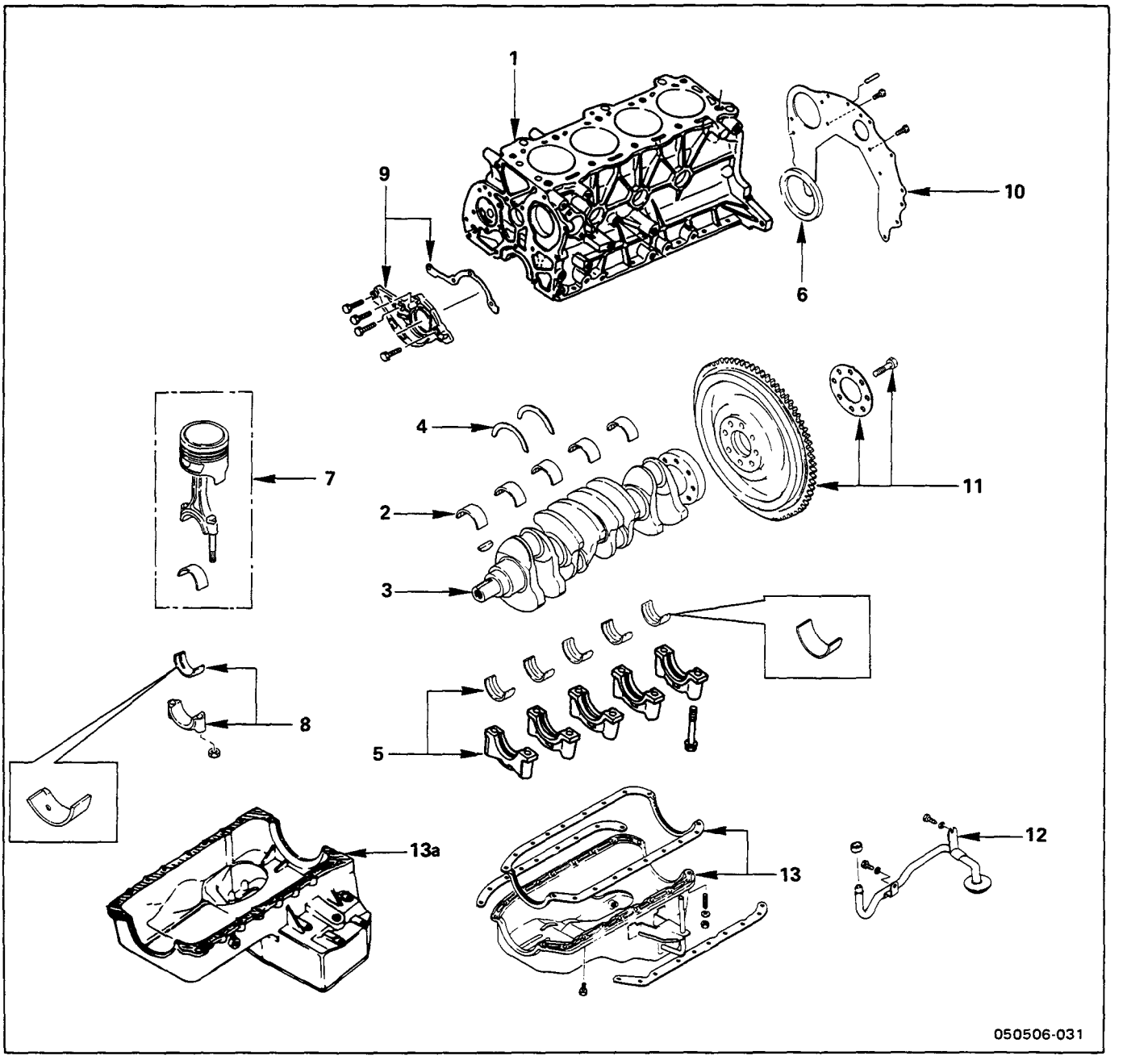

0505060002B, 0505060002C

Reassembly Steps-1

- ▲ 1. Cylinder body
- ▲ 2. Crankshaft upper bearing
- ▲ 3. Crankshaft
- ▲ 4. Crankshaft thrust bearing
- ▲ 5. Crankshaft bearing cap with lower bearing
- ▲ 6. Crankshaft rear oil seal
- ▲ 7. Piston and connecting rod with upper bearing
- ▲ 8. Connecting rod bearing cap with lower bearing
- ▲ 9. Crankshaft front oil seal retainer
- ▲ 10. Cylinder body rear plate
- ▲ 11. Flywheel
- ▲ 12. Oil pipe with strainer
- ▲ 13. Oil pan (For 4 × 2)
- ▲ 13a. Oil pan (For 4 × 4)

Inverted engine

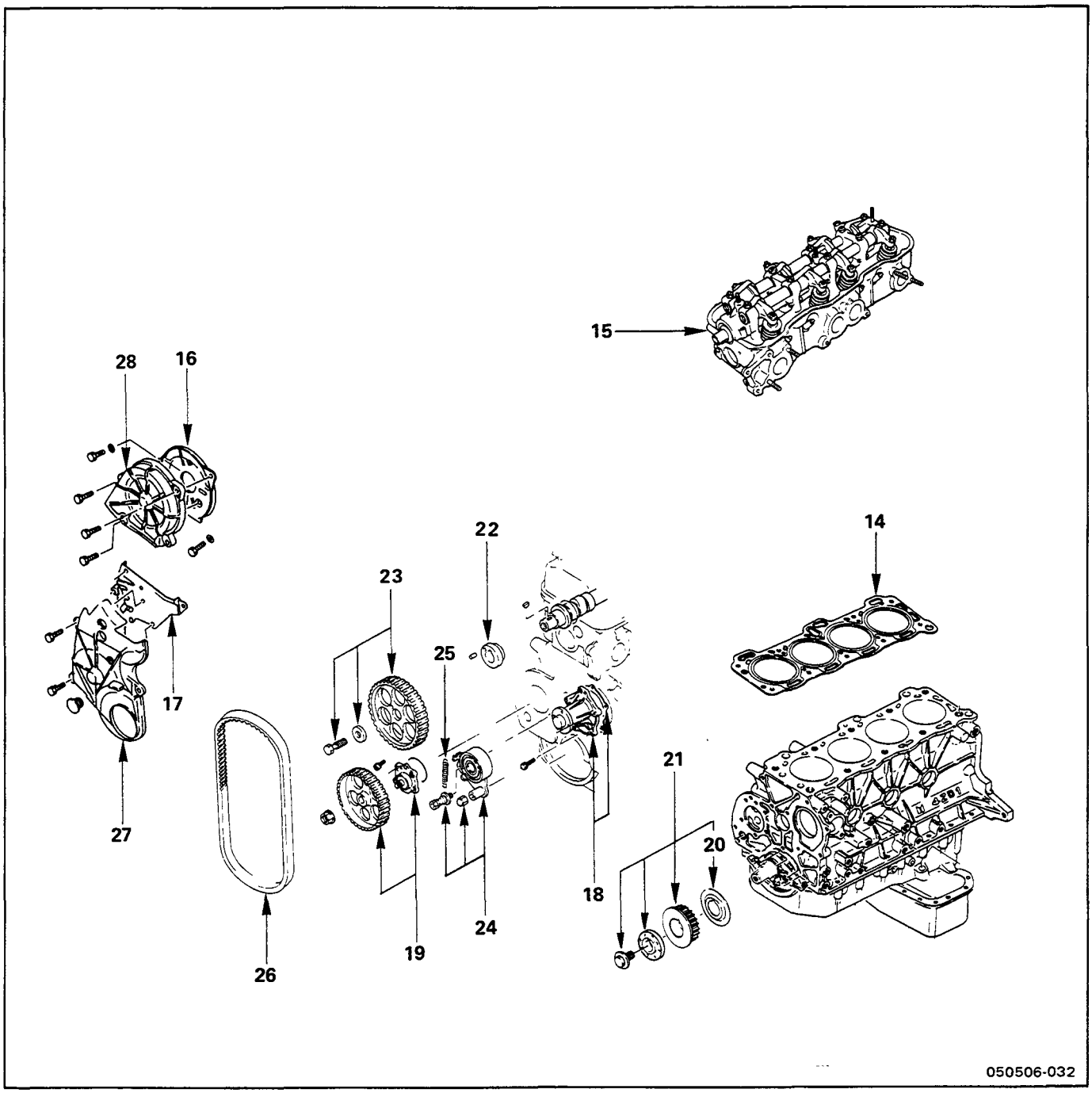

0505060002D, 0505060002E

Reassembly Steps-2

- ▲ 14. Cylinder head gasket
- ▲ 15. Cylinder head with rocker arm shaft and camshaft
- ▲ 16. Cylinder head front plate (Upper)
- ▲ 17. Cylinder body front plate (Lower)
- ▲ 18. Water pump
- ▲ 19. Oil pump with timing pulley
- ▲ 20. Timing belt guide plate
- ▲ 21. Crankshaft timing pulley
- 22. Camshaft boss
- ▲ 23. Camshaft timing pulley
- ▲ 24. Tension pulley
- ▲ 25. Tension spring
- ▲ 26. Timing belt
- 27. Timing belt lower cover
- 28. Timing belt upper cover

05050601

Important Operations

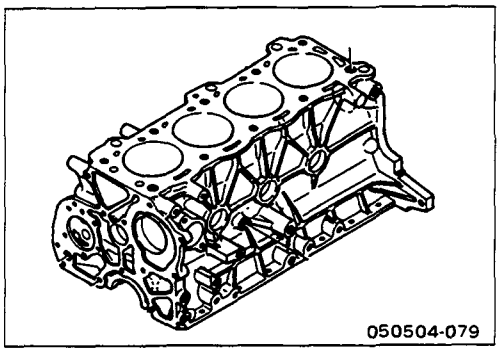

1. Cylinder Body

Use compressed air to thoroughly clean the inside and outside surfaces of the cylinder body, the oil holes, and the water jackets.

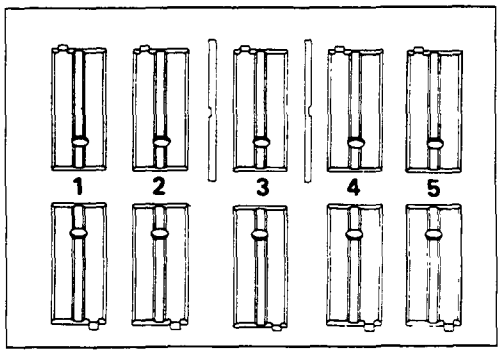

2. Crankshaft Upper Bearing

Crankshaft bearings are selected according to cylinder body and crankshaft grade.

Refer to "INSPECTION AND REPAIR", "Crankshaft Bearing Selection".

1) Carefully wipe any foreign material from the upper bearing.

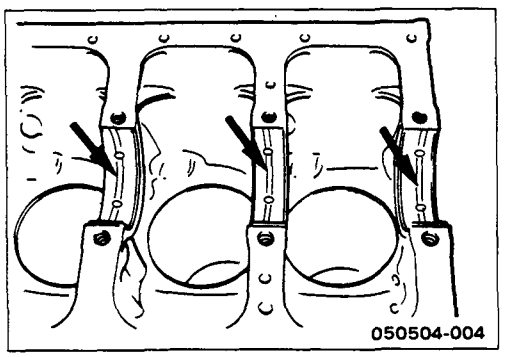

Note:

Do not apply engine oil to the bearing back faces and the cylinder body bearing fitting surfaces.

0505060101

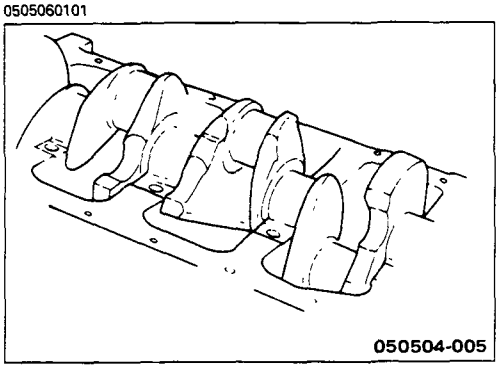

3. Crankshaft

Apply an ample coat of engine oil to the crankshaft journals and the crankshaft bearing surfaces before installing the crankshaft.

0505040104

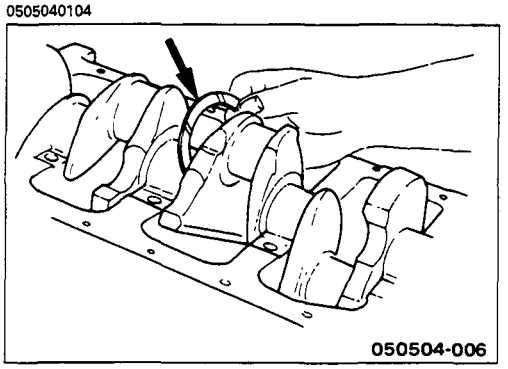

4. Crankshaft Thrust Bearing

Apply an ample coat of engine oil to the thrust bearings before installation.

Install the thrust bearings to the crankshaft center journal.

The thrust bearing oil grooves must be facing the sliding faces.

050504010502A

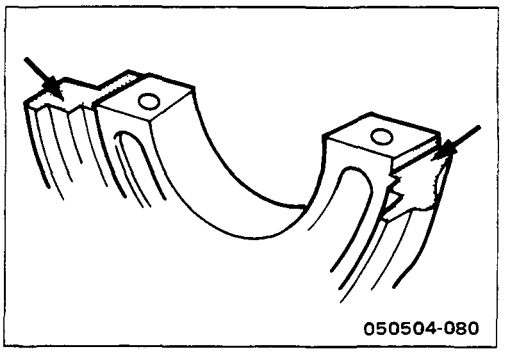

5. Crankshaft Bearing Cap with Lower Bearing

1) Apply the recommended liquid gasket or its equivalent to the cylinder body fitting surfaces of the No. 5 crankshaft bearing cap.

Note:

Lower bearing are as follows;
4ZE1 engine without oil groove of bearing.
4ZC1/4ZD1 engine with oil groove of bearing.

050504010502B

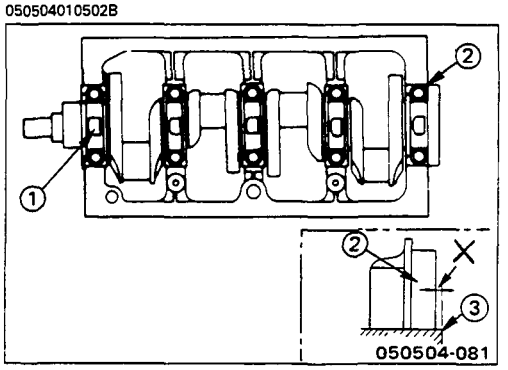

2) Install the bearing caps with the bearing cap head mark ① facing forward.

Note:

The No. 5 bearing cap ② must be perfectly flush with the cylinder body rear face ③.

050504010502C

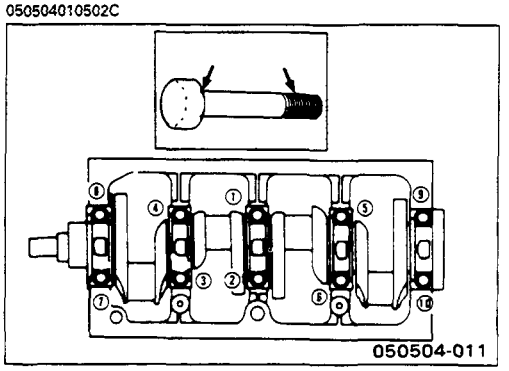

3) Apply a coat of engine oil to the bearing cap bolts.

4) Tighten the bearing cap bolts to the specified torque a little at a time in the sequence shown in the illustration.

Crankshaft Bearing Cap Bolt Torque	kg·m(lb.ft/N·m)
10.0 ± 1.5 (72.3 ± 10.5/98.0 ± 14.7)	

5) Check to see that the crankshaft turns smoothly by rotating it manually.

050504010602A

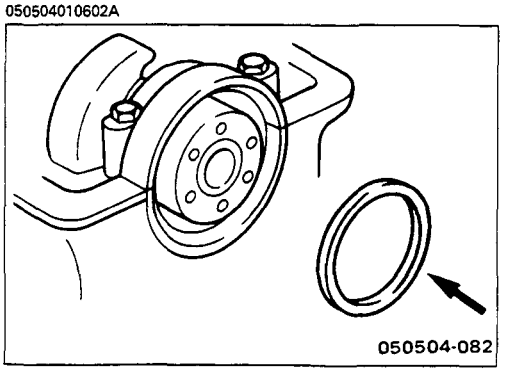

6. Crankshaft Rear Oil Seal

1) Apply engine oil to the oil seal lip circumference and the oil seal outer circumference.

050504010602B

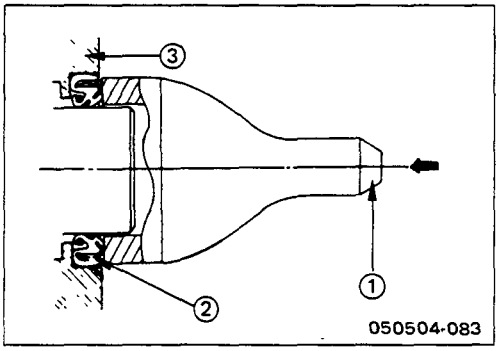

2) Use the oil seal installer ① to install the oil seal ② to the cylinder body ③.

Oil Seal Installer: 5-8840-2286-0 (J-39201)

0505040112A

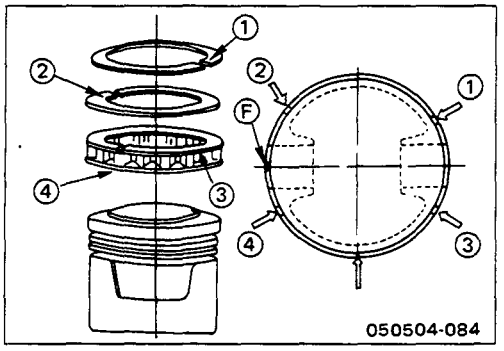

7. Piston and Connecting Rod with Upper Bearing

8. Connecting Rod Bearing Cap with Lower Bearing

1) Apply a coat of engine oil to the circumference of each piston ring and piston.

2) Position the piston ring gaps as shown in the illustration.

① 1st compression ring
② 2nd compression ring
③ Oil ring (Upper side rail)
④ Oil ring (Lower side rail)

0505040112B

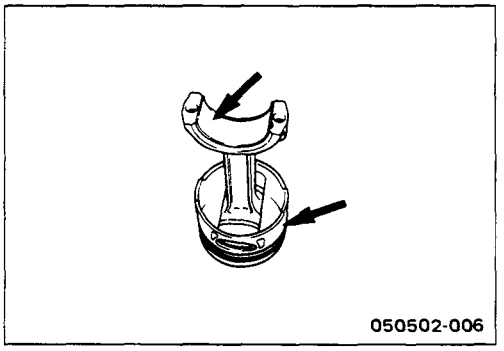

3) Apply a coat of molybdenum disulfide grease to the two piston skirts.

This will facilitate smooth break-in when the engine is first started after reassembly.

4) Apply a coat of engine oil to the upper bearing surfaces.

5) Apply a coat of engine oil to the cylinder wall.

0505040112C

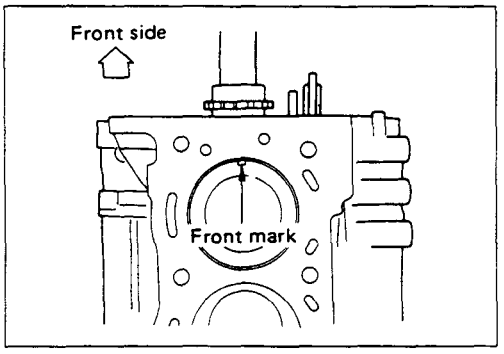

6) Position the piston head front mark so that it is facing the front of engine.

7) Use the piston ring compressor to compress the piston rings.

Piston Ring Compressor: 5-8840-9018-0 (J-8037)

8) Use a hammer grip to push the piston in until the connecting rod makes contact with the crankpin.

At the same time, rotate the crankshaft until the crankpin is at BDC.

0505040112D

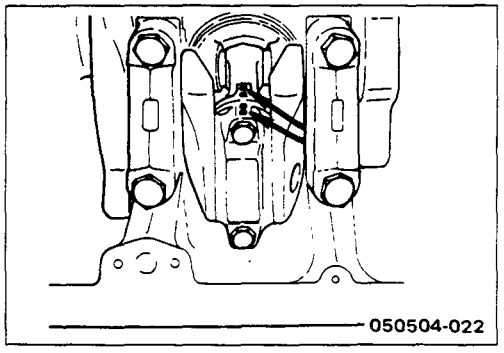

9) Install the connecting rod bearing caps.

Align the bearing cap cylinder number marks and the connecting rod cylinder number marks.

Note:

Lower bearing are as follows;
4ZE1 engine without oil groove of bearing.
4ZC1/4ZD1 engine with half oil groove of bearing.

0505040112E

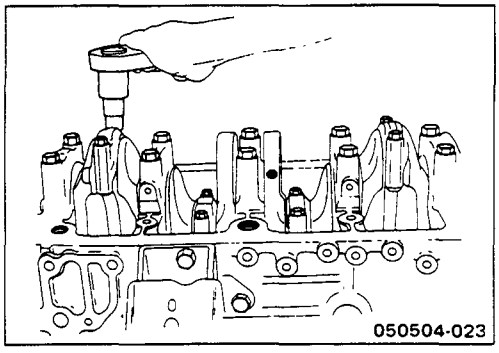

10) Apply a coat of engine oil to the threads and setting faces of each connecting rod cap bolt.

11) Tighten the connecting rod caps to the specified torque.

Connecting Rod Bearing Cap Bolt

Torque	kg·m(lb.ft/N·m)
4ZC1/4ZD1/4ZE1 M10	6.0±0.2 (43.4±1.5/58.8±2.0)

0505060113

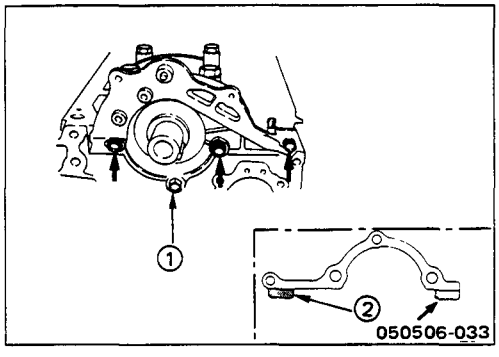

9. Crankshaft Front Oil Seal Retainer

1) Apply engine oil to the oil seal lip circumference and the oil seal outer circumference.

2) Apply the recommended liquid gasket or its equivalent to the oil seal retainer gasket.

3) Tighten the oil seal retainer bolts ① to the specified torque.

Oil Seal Retainer Bolt Torque	kg·m(lb.ft/N·m)
1.9 ± 0.5 (13.7 ± 3.6/18.6 ± 4.9)	

4) Cut away any gasket protruding ② from the area where the oil pan is to be installed.

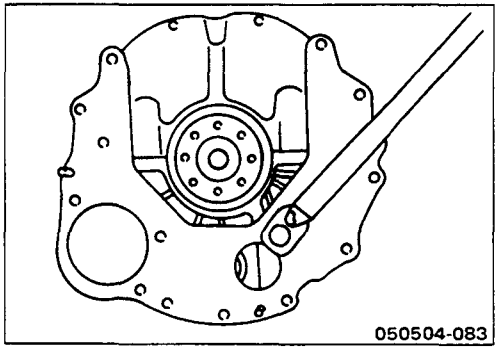

10. Cylinder Body Rear Plate

1) Install the rear plate to the cylinder body.

Align the rear plate with the cylinder body knock pin.

2) Tighten the rear plate bolts to the specified torque.

Rear Plate Bolt Torque	kg·m(lb.ft/N·m)
5 ± 1 (36.2 ± 7.2/49.0 ± 9.8)	

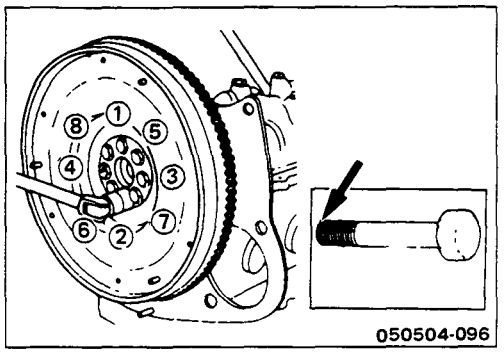

11. Flywheel

1) Apply the LOCTITE or its equivalent to the new bolts.
2) Block the crankshaft with a piece of hard wood to prevent it from turning.
3) Tighten the flywheel bolts in the numerical order shown in the illustration.

Flywheel Bolt Torque	kg·m(lb.ft/N·m)
6.0 ± 0.5 (43.4 ± 3.6/58.8 ± 4.9)	

Note:

When reinstalling the crankshaft which has been in use, remove all traces of LOCTITE from the bolt holes in the crankshaft by turning in the new bolt, then clean the crankshaft with cleaner before installing the flywheel.

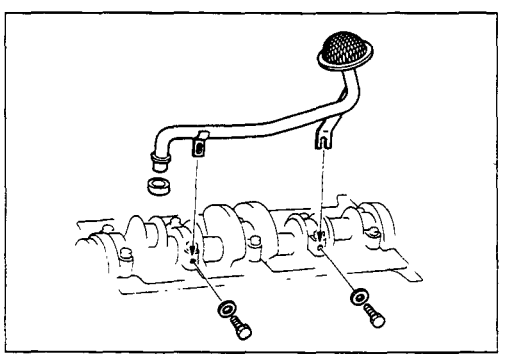

12. Oil Pipe with Strainer

1) Install the rubber hose to the oil pipe.
2) Install the oil pipe to the bearing caps.
3) Tighten the oil pipe bolts to the specified torque.

Oil Pipe Bolt Torque	kg·m(lb.ft/N·m)
1.9 ± 0.5 (13.7 ± 3.6/18.6 ± 4.9)	

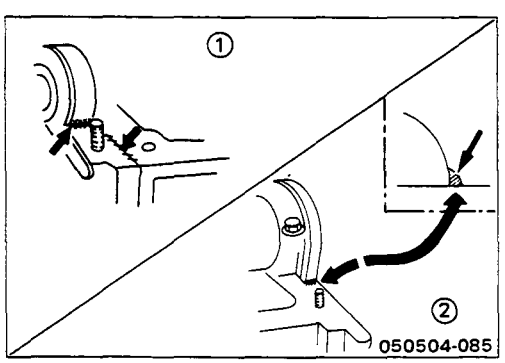

13. Oil Pan (For 4 × 2)

1) Apply the recommended liquid gasket or its equivalent to the gap between the oil seal retainer and the cylinder body at the positions shown in the illustration ①.
2) Apply the recommended liquid gasket or its equivalent to the No. 5 bearing cap at the positions shown in the illustration ②.

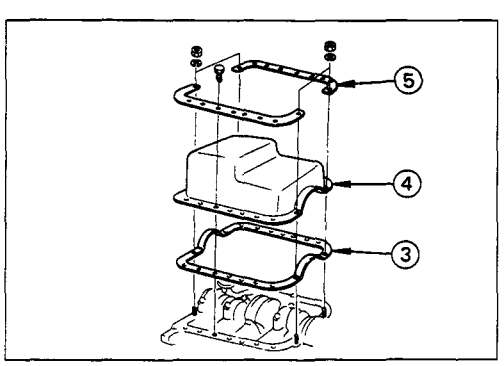

3) Install the oil pan gasket ③ and the oil pan ④ to the cylinder body.
4) Install the damper plates ⑤ to the oil pan.
   The damper plate rubber side must be oil pan side.

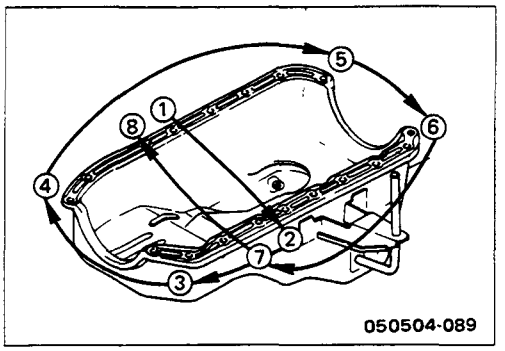

5) Tighten the oil pan bolts and nuts to the specified torque a little at a time in the sequence shown in the illustration.

Oil Pan Bolt and Nut Torque	kg·m(lb.ft/N·m)
0.5 ± 0.1 (3.6 ± 0.7/4.9 ± 1.0)	

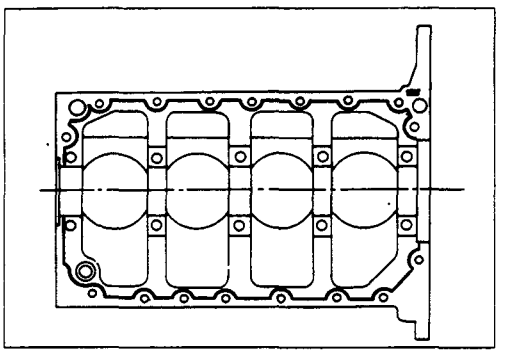

13a. Oil Pan (For 4 × 4)

1) Apply the recommended liquid gasket or its equivalent to the oil pan fitting surfaces of the cylinder body.

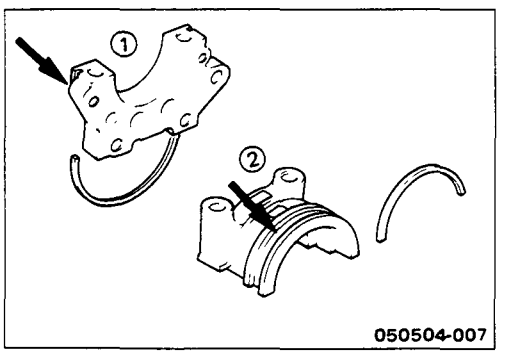

2) Install an arch gasket to both the No. 1 ① and the No. 5 ② crankshaft bearing caps.

Apply liquid gasket to the end of the arch gasket.

Use your fingers to push the arch gasket into the groove.

Take care not to scratch the outer surface of the arch gasket.

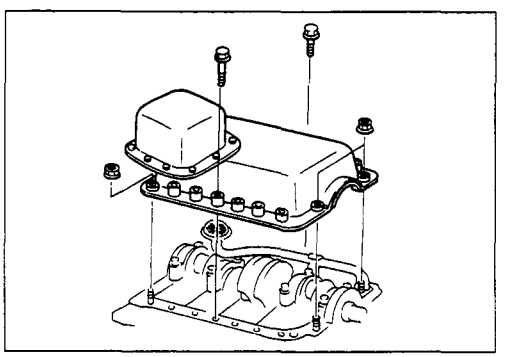

0505040117

3) Tighten the oil pan bolts and nuts to the specified torque a little at a time.

Oil Pan Bolt Torque	kg·m(lb.ft/N·m)
1.8 ± 0.5 (13.0 ± 3.6/17.6 ± 4.9)	

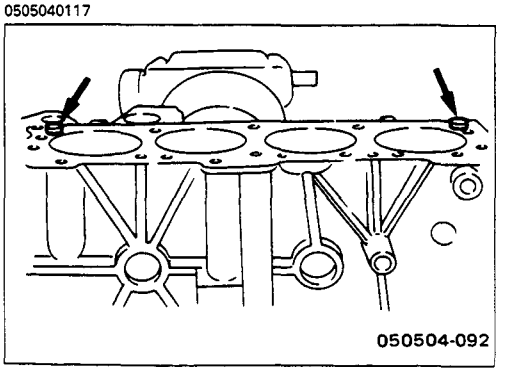

14. Cylinder Head Gasket

1) Clean the cylinder body upper side and the cylinder head lower side and attach the dowels.

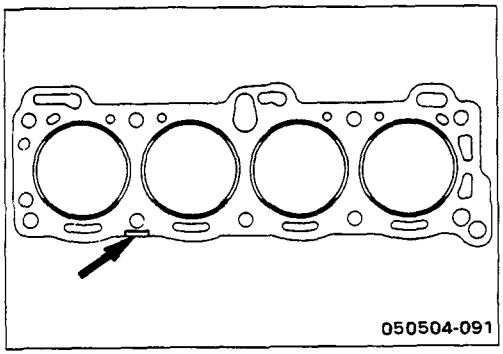

2) Install the gasket with the "TOP" mark facing up and to the front.

Align the cylinder head dowels and the cylinder head gasket holes.

050504011801A

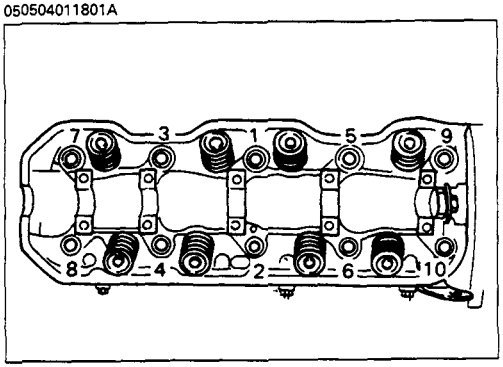

050504011801B

15. Cylinder Head with Rocker Arm Shaft and Camshaft

1) Apply a coat of engine oil to the cylinder head bolt threads and setting faces.

2) Use the cylinder head bolt wrench to tighten the cylinder head bolts to the specified torque.

Follow the numerical sequence shown in the illustration.

Head Bolt Wrench: 9-8511-4209-0 (J-2423-01)

Cylinder Head Bolt Torque	kg·m(lb.ft
1st Step	2nd Step
8 (57.8/78.4)	10 ± 1 (72.3 ± 7.2/98.0 ± 9.8)

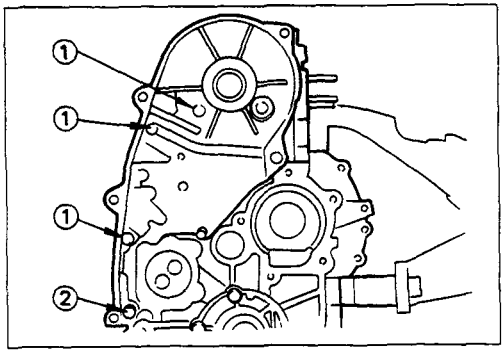

16. Cylinder Head Front Plate

17. Cylinder Body Front Plate

1) Install the cylinder head front plate to the cylinder head.

2) Install the cylinder body front plate to the cylinder body.

3) Tighten the front plate bolts to the specified torque.

Front Plate Bolt Torque	kg·m(lb.ft/N·m)
① M6 × 1.0 (4T)	0.6 ± 0.2 (4.3 ± 1.4/5.9 ± 2.0)
② M8 × 1.25 (4T)	1.3 ± 0.5 (9.4 ± 3.6/9.8 ± 4.9)

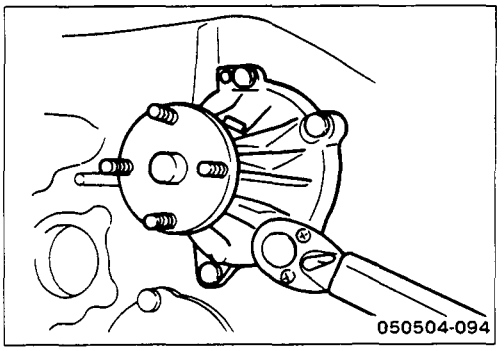

18. Water Pump

Tighten the water pump bolts to the specified torque.

Water Pump Bolt Torque	kg·m(lb.ft/N·m)
2.7 ± 0.5 (19.5 ± 3.6/26.5 ± 4.9)	

Water Pump Nut Torque	kg·m(lb.ft/N·m)
1.9 ± 0.5 (13.7 ± 3.6/18.6 ± 4.9)	

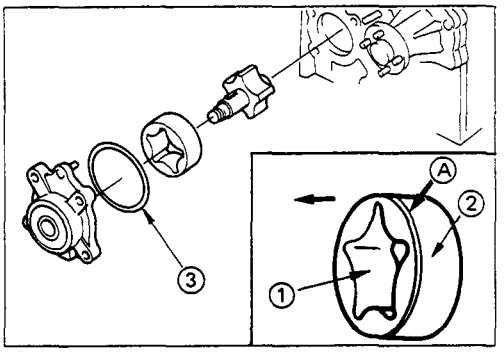

19. Oil Pump and Timing Pulley

1) Apply engine oil to the cylinder body outer rotor fitting surfaces and the inner ① and the outer ② rotor.
2) Install the rotors to the oil pump.
   The chamfered side Ⓐ of the rotors turned to the cylinder body.
3) Install the O-rings ③ to the oil pump body.

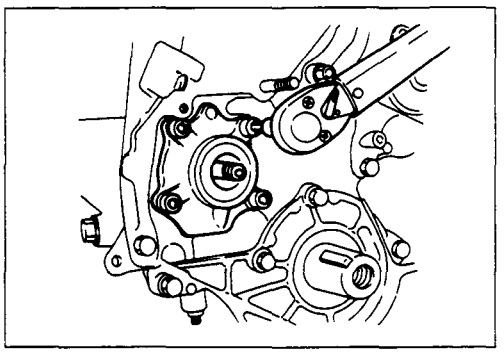

4) Install the oil pump assembly to the cylinder body.

Note:

Take care not to twist the O-rings during the installation procedure.

5) Use the inner hexagon wrench to tighten the oil pump bolts to the specified torque.
   Inner Hexagon Wrench: 6 mm (0.24 in)

Oil Pump Bolt Torque	kg·m(lb.ft/N·m)
1.9 ± 0.5 (13.7 ± 3.6/18.6 ± 4.9)	

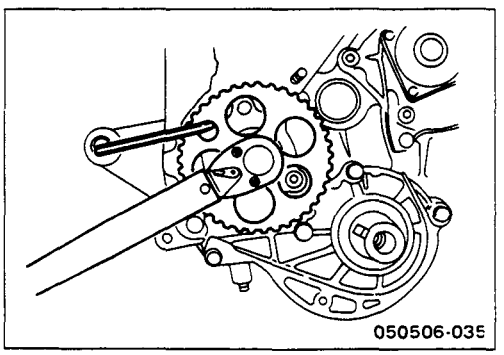

6) Check that the oil pump rotor turns smoothly.
7) Install the timing pulley to the oil pump.
8) Apply the LOCTITE or its equivalent to the pulley nut.
9) Tighten the timing pulley nut to the specified torque.

Timing Pulley Nut Torque	kg·m(lb.ft/N·m)
7.7 ± 1.0 (55.7 ± 7.2/75.5 ± 9.8)	

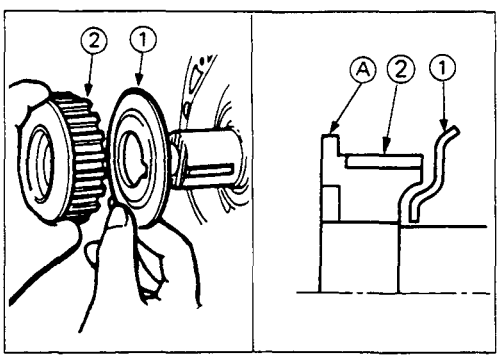

20. Timing Belt Guide Plate

21. Crankshaft Timing Pulley

Install the crankshaft timing pulley with the guide plate ① projecting side facing the timing pulley ② and the timing pulley flanged portion Ⓐ facing forward.

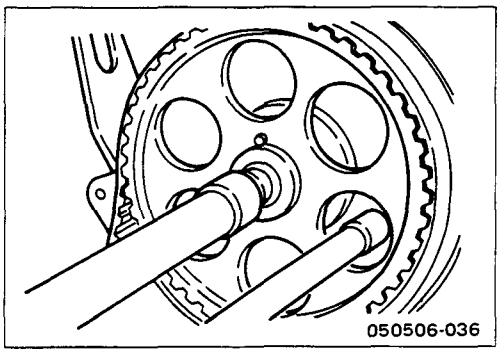

23. Camshaft Timing Pulley

Tighten the camshaft timing pulley bolts to the specified torque.

Camshaft Timing Pulley Bolt Torque	kg·m(lb.ft/N·m)
6.0 ± 0.5 (43.4 ± 3.6/58.8 ± 4.9)	

050506011001

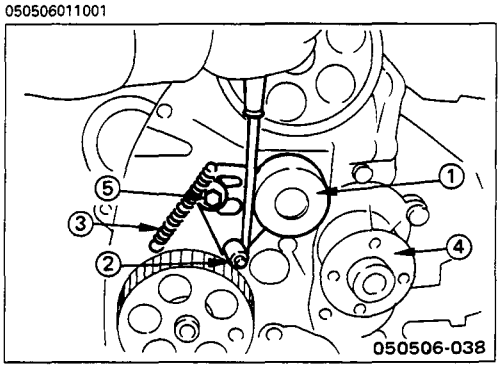

24. Tension Pulley

25. Tension Spring

1) Install the tension pulley ① to the tension stud ②.
2) Install the tension spring ③.
3) Using the tension stud ② as a fulcrum, push the tension pulley ① as far as possible in the direction of the water pump ④.
4) Temporarily tighten the tensioner bolt ⑤.

   The bolt must be tightened enough to hold the spring in place.

050506010801A

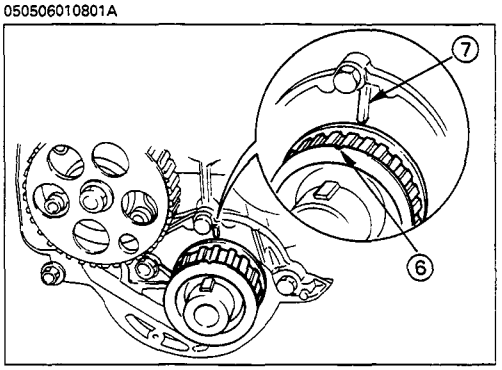

26. Timing Belt

1) Align the crankshaft timing pulley mark ⑥ with the oil seal retainer setting mark ⑦.

050506010801B

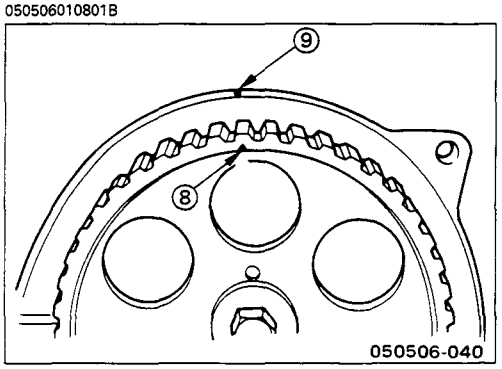

2) Check that the camshaft timing pulley setting mark ⑧ and the front plate setting mark ⑨ are aligned.

Note:

At this point the No. 4 cylinder comes to its compression, top dead center.

050506010801C

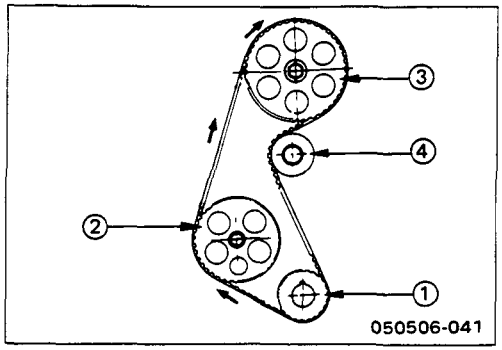

3) Install the timing belt to the crankshaft timing pulley ①, the oil pump timing pulley ②, the camshaft timing pulley ③, and the tension pulley ④ in that order.

Note:

1) Take care not to twist the timing belt.

2) Be sure that the timing belt cleanly fits over the pulley gear teeth.

050506010801D

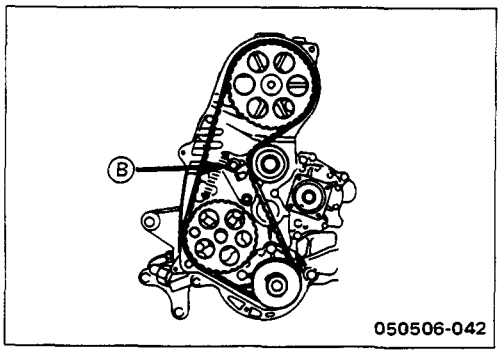

4) Loosen the tensioner bolt Ⓑ.

5) Allow the tension spring to pull the timing belt as far as possible.

6) Once again, temporarily tighten the tensioner bolt Ⓑ.

050506010801E

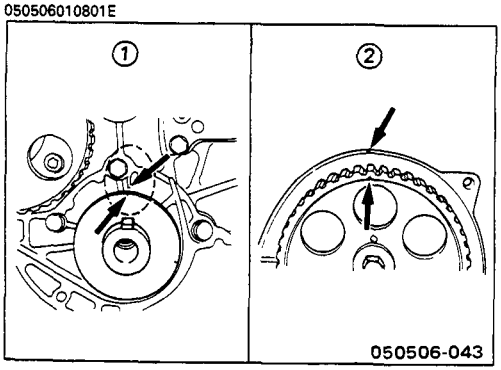

7) Rotate the crankshaft counterclockwise two full turns (720°).

① Check that the crankshaft timing pulley mark is aligned with the oil seal retainer setting mark.

② Check that the camshaft timing pulley setting mark is aligned with the front cover setting mark.

050506010801F

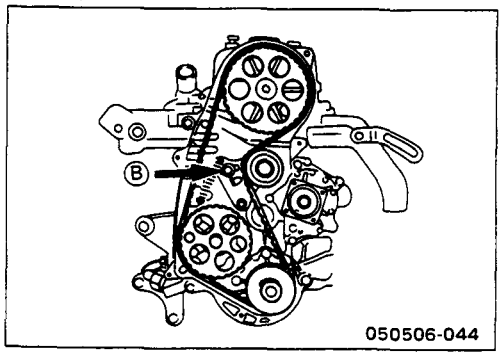

8) Loosen the tensioner bolt "Ⓑ".

9) Allow the tension spring to pull the timing belt as far as possible.

10) Tighten the tensioner bolt "B" to the specified torque.

Tensioner Bolt "B" Torque	kg·m(lb.ft/N·m)
1.9 ± 0.5 (13.7 ± 3.6/18.6 ± 4.9)	

EXTERNAL PARTS

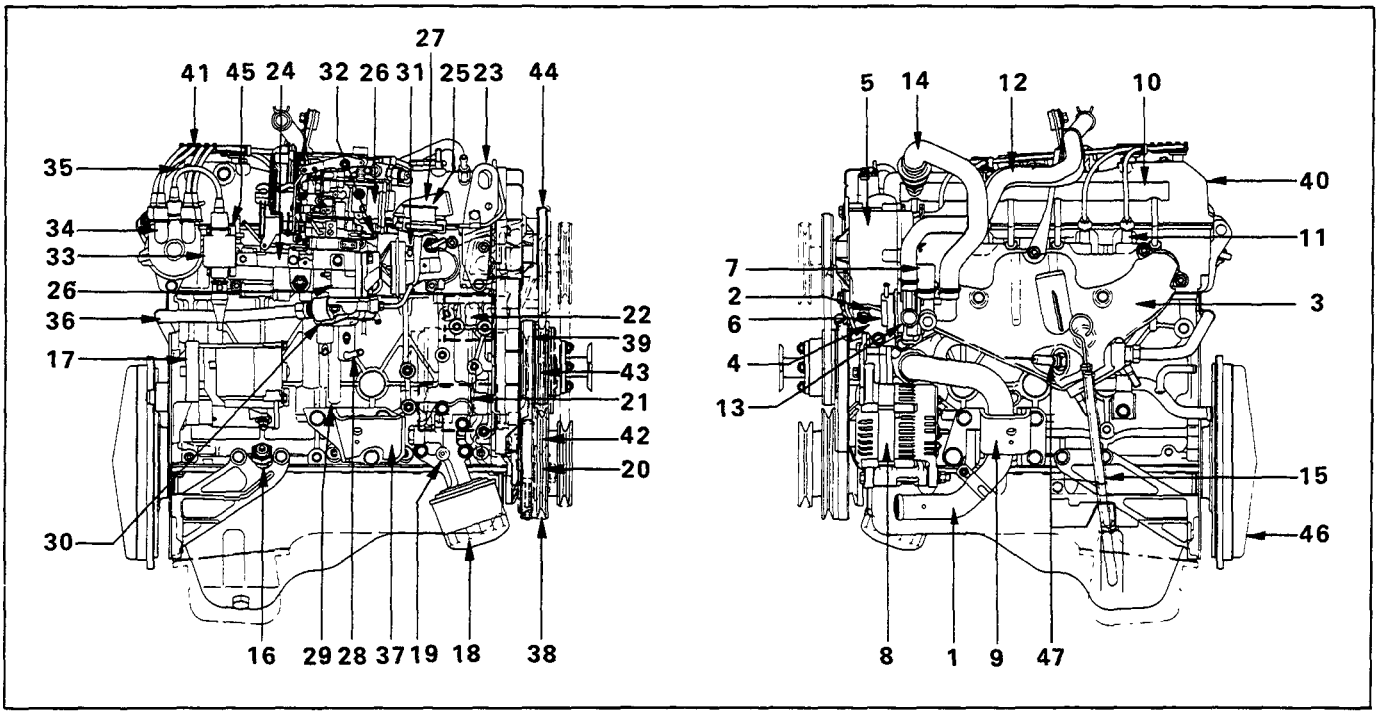

Reassembly Steps

- ▲ 1. Water intake pipe
- ▲ 2. Air pump bracket "A" [V]
- ▲ 3. Exhaust manifold
- ▲ 4. Air pump bracket "B" [V]
- ▲ 5. Air pump [V]
- ▲ 6. Air switching valve [V]
- ▲ 7. Rubber hose (Air pump to A.S.V.) [V]
- ▲ 8. Alternator and bracket
- ▲ 9. Engine foot with mounting rubber
- ▲ 10. Air manifold with check valve [V]
- ▲ 11. Spark plug
- 12. Rubber hose (Air pump to air cleaner) [V]
- 13. Rubber hose (A.S.V. to air intake duct bracket) [V]
- ▲ 14. Rubber hose (A.S.V. to check valve) [V]
- 15. Dipstick and guide tube
- 16. Oil pressure switch
- ▲ 17. Starter motor
- ▲ 18. Oil filter adapter with oil filter
- ▲ 19. Oil pressure unit [V]
- 20. Compressor idler pulley and bracket [V]
- ▲ 21. Compressor and bracket [V]
- ▲ 22. Power steering oil pump and bracket [V]
- 23. Front engine hanger
- ▲ 24. Intake manifold
- ▲ 25. BP transducer and bracket [V]
- ▲ 26. Carburetor
- 27. Water outlet pipe
- ▲ 28. Fuel pump
- ▲ 29. Fuel damper
- ▲ 30. EGR adapter [V]
- ▲ 31. EGR valve [V]
- ▲ 32. Fast idle solenoid (with A/C) [V]
- ▲ 33. Ignition coil [V]
- ▲ 34. Distributor
- ▲ 35. High tension cable (Ignition coil to distributor) [V]
- ▲ 36. EGR pipe [V]
- ▲ 37. Engine foot with mounting rubber
- ▲ 38. Crankshaft pulley
- ▲ 39. Cooling fan pulley
- ▲ 40. Cylinder head cover
- 41. High tension cable
- ▲ 42. Cooling fan drive belt
- ▲ 43. Compressor drive belt [V]
- ▲ 44. Air pump drive belt [V]
- ▲ 45. Condenser [V]
- ▲ 46. Clutch pressure plate assembly and driven plate assembly

[V] : Optional on some models

Important Operations – Installation

Emission Control Vacuum Hoses

Refer to the tags attached at disassembly to reinstall the emission control vacuum hose.

Follow the external parts installation step order.

If there are no tags attached, refer to the "VACUUM HOSE ROUTING DIAGRAM" in the section 6E.

It is very important that the hose be installed correctly.

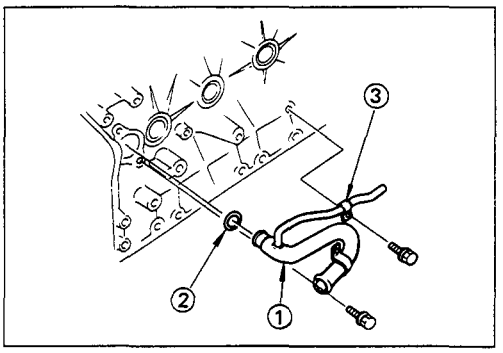

1. Water Intake Pipe

1) Install the intake pipe ① together with the O-ring ② and the clip ③ to the cylinder body.
2) Tighten the intake pipe bolts to the specified torque.

Intake Pipe Bolt Torque	kg·m(lb.ft/N·m)
1.9 ± 0.5 (13.7 ± 3.6/18.6 ± 4.9)	

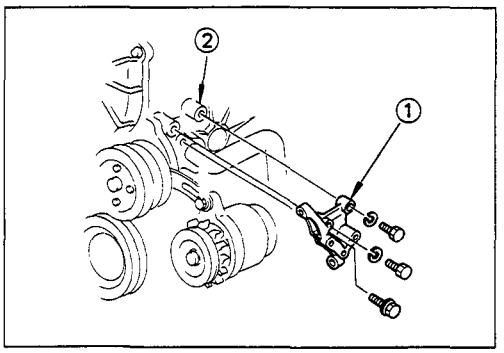

2. Air Pump Bracket "A" [V]

1) Install the air pump bracket "A" ① to the cylinder body ②.
2) Tighten the bracket bolts to the specified torque.

Air Pump Bracket "A" Bolt Torque	kg·m(lb.ft/N·m)
5.6 ± 0.8 (40.5 ± 5.8/54.9 ± 7.8)	

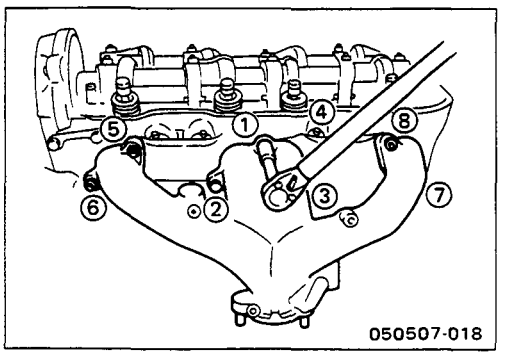

3. Exhaust Manifold

1) Install the manifold gasket with the stamped mark facing outward.
2) Tighten the exhaust manifold bolts to the specified torque a little at a time in the numerical order shown in the illustration.

Exhaust Manifold Bolt Torque	kg·m(lb.ft/N·m)
2.2 ± 0.3 (15.9 ± 2.2/21.6 ± 2.9)	

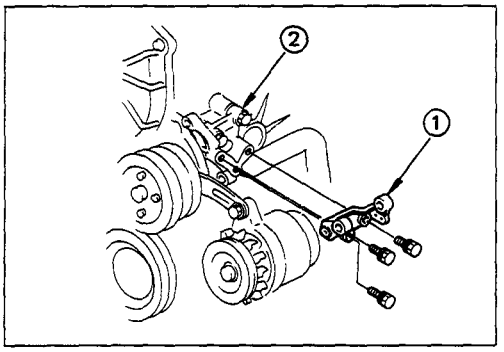

4. Air Pump Bracket "B" [V]

1) Install the air pump bracket "B" ① to the air pump bracket "A" ②.
2) Tighten the bracket bolts to the specified torque.

Air Pump Bracket "B" Bolt Torque	kg·m(lb.ft/N·m)
1.9 ± 0.5 (13.7 ± 3.6/18.6 ± 4.9)	

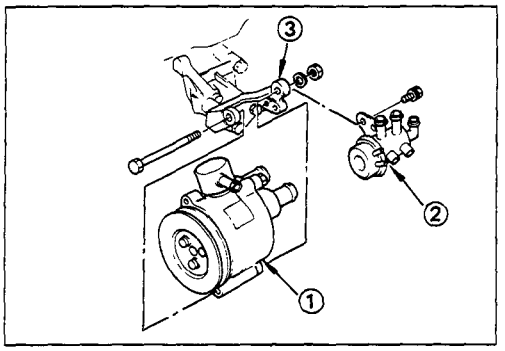

5. Air Pump [V]

6. Air Switching Valve [V]

1) Install the air pump ① and the air switching valve ② to the pump bracket "B" ③.
2) Tighten the air pump nuts to the specified torque.

Air Pump Nut Torque	kg·m(lb.ft/N·m)
1.9 ± 0.5 (13.7 ± 3.6/18.6 ± 4.9)	

3) Tighten the air switching valve bolts to the specified torque.

Air Switching Valve Torque	kg·m(lb.ft/N·m)
1.9 ± 0.5 (13.7 ± 3.6/18.6 ± 4.9)	

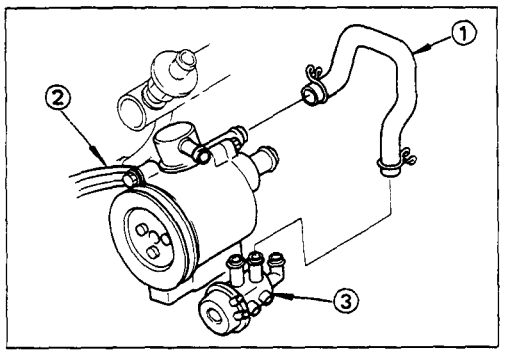

7. Rubber Hose (Air Pump to Air Switching V [V]

Connect the rubber hose ① between the air pum and the air switching valve ③.

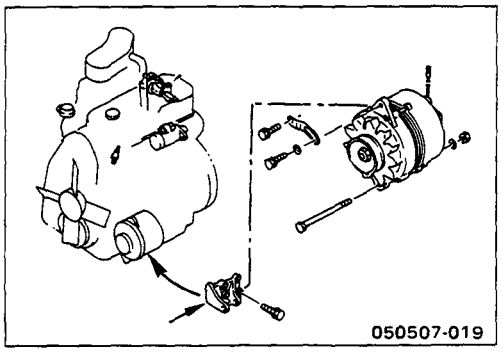

8. Alternator and Bracket

1) Install the alternator bracket to the cylinder body and tighten the bracket bolts to the specified torque.

Transmission Nut and Bolt Torque	kg·m(lb.ft/N·m)
3.8 ± 1.0 (27.5 ± 7.2/37.3 ± 9.8)	

2) Install the alternator to the bracket.
   Tighten the through bolt.
3) Temporarily tighten the adjusting bolt.

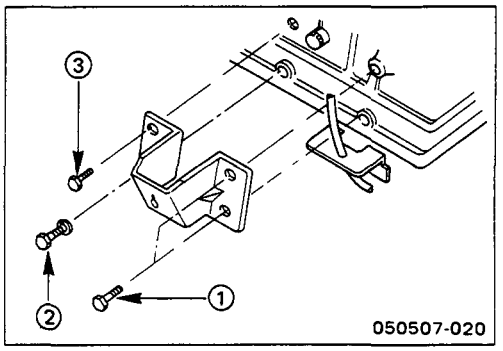

9. Engine Foot with Mounting Rubber

Tighten the engine left side foot bolts to the specified torque.

Engine Foot Bolt Torque	kg·m(lb.ft/N·m)
①	8.4 ± 0.8 (60.8 ± 5.8/82.4 ± 7.8)
②	12.9 ± 1.5 (93.3 ± 10.8/126.5 ± 14.7)
③	4.1 ± 0.6 (29.7 ± 4.3/40.2 ± 5.9)

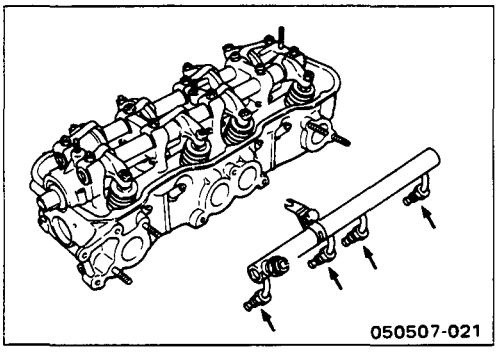

10. Air Manifold with Check Valve [V]

1) Hand-tighten the four sleeve bolts.
2) Use a wrench to tighten the sleeve nuts to the specified torque.

Air Manifold Sleeve Nut Torque	kg·m(lb.ft/N·m)
1.9 ± 0.5 (13.7 ± 3.6/18.6 ± 4.9)	

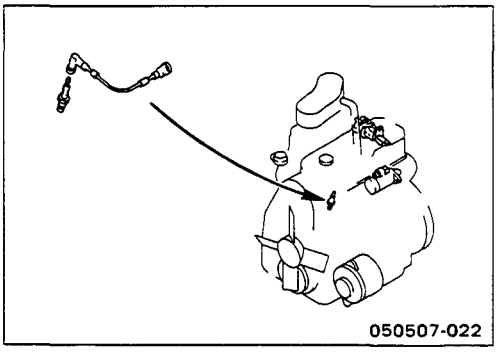

11. Spark Plug

Tighten the spark plugs to the specified torque.

Spark Plug Torque	kg ·m(lb.ft/N·m)
1.9 ± 0.5 (13.7 ± 3.6/18.6 ± 4.9)	

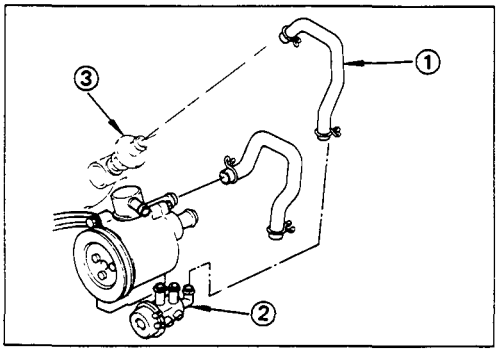

14. Rubber Hose (ASV to Air Manifold Check Valve) [V]

Connect the rubber hose ① between the air switching valve ② and the air manifold check valve ③.

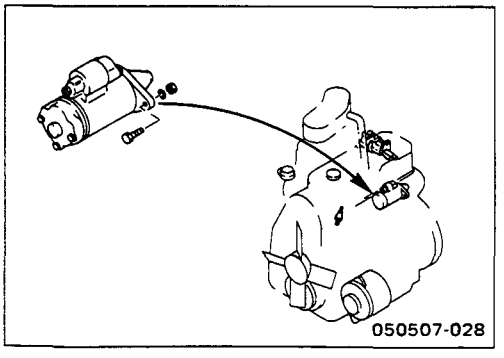

17. Starter Motor

1) Install the starter motor to the rear plate.
2) Tighten the starter motor bolts to the specified torque.

Starter Motor Torque	kg·m(lb.ft/N·m)
8.8 ± 1.9 (63.7 ± 13.7/86.2 ± 18.6)	

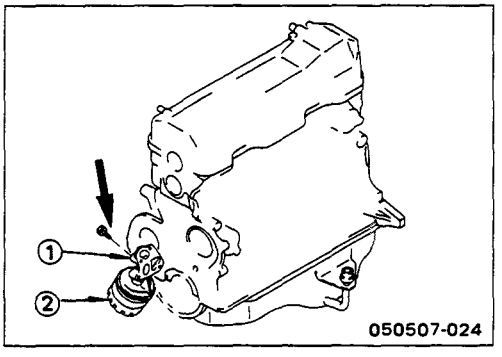

18. Oil Filter Adapter with Oil Filter

1) Install the oil filter adapter ① and the oil filter ② to the cylinder body.
2) Tighten the oil filter adapter bolts to the specified torque.

Oil Filter Adapter Bolt Torque	kg·m(lb.ft/N·m)
1.9 ± 0.5 (13.7 ± 3.6/18.6 ± 4.9)	

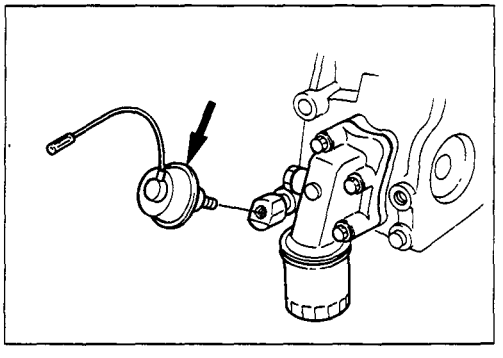

19. Oil Pressure Unit [V]

1) Install the oil pressure unit to the oil filter adapter.
2) Tighten the unit to the specified torque.

Oil Pressure Unit Torque	kg·m(lb.ft/N·m)
0.75 ± 0.15 (4.3 ± 1.1/5.9 ± 1.5)	

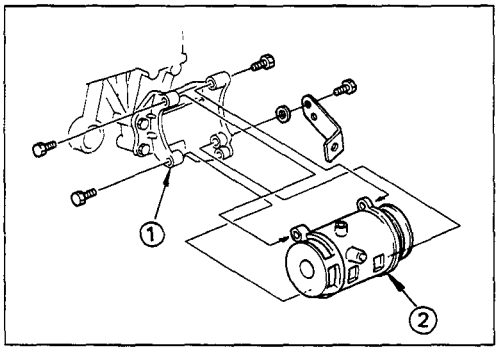

21. Compressor and Bracket [V]

1) Install the compressor bracket ① to the cylinder body.
2) Tighten the compressor bracket bolts to the specified torque.

Compressor Bracket Bolt Torque	kg·m(lb.ft/N·m)
4.1 ± 0.6 (29.7 ± 4.3/40.2 ± 5.9)	

3) Install the compressor ② to the compressor bracket.
4) Hand-tighten the compressor bolts.
5) Tighten the compressor bolts at the front side of the compressor to the specified torque.
6) Tighten the compressor bolts at the rear side of the compressor to the specified torque.

Compressor Bolt Torque	kg·m(lb.ft/N·m)
4.1 ± 0.6 (29.7 ± 4.3/40.2 ± 5.9)	

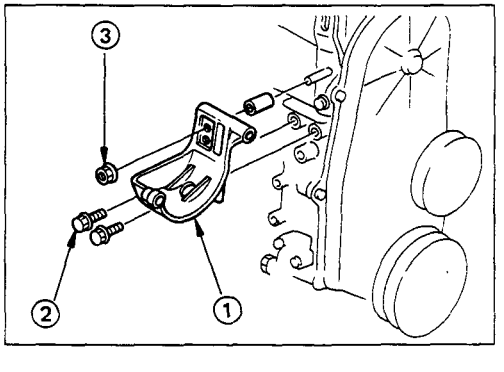

22. Power Steering Oil Pump and Bracket [V]

1) Install the power steering oil pump bracket ① to the cylinder body.
2) Tighten the oil pump bracket nuts ② and bolts ③ to the specified torque.

Power Steering Oil Pump Bracket Torque	kg·m(lb.ft/N·m)
Nut	2.7 ± 0.5 (19.5 ± 3.6/26.5 ± 4.9)
Bolt	4.1 ± 0.6 (29.7 ± 4.3/40.2 ± 5.9)

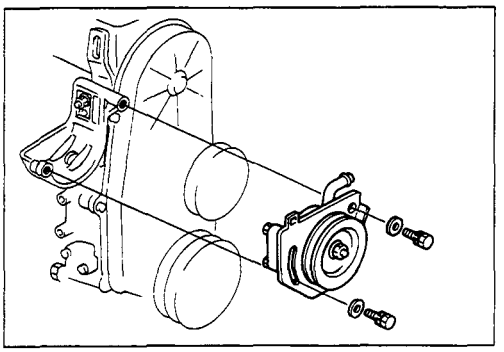

3) Install the power steering oil pump to the oil pump bracket.
4) Temporarily tighten the oil pump bolts.

   The oil pump bolts will be tightened to the specified torque after the drive belt tension is adjusted.

Power Steering Oil Pump Bolt Torque	kg·m(lb.ft/N·m)
3.8 ± 1.0 (27.5 ± 7.2/37.2 ± 9.8)	

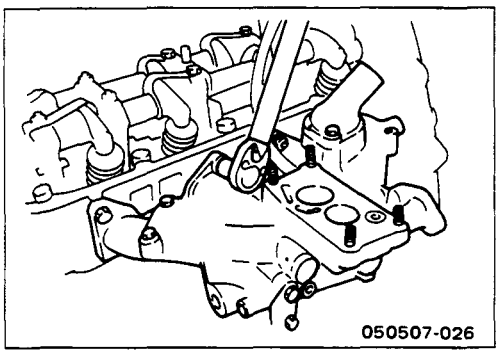

24. Intake Manifold

Install the intake manifold and tighten the bolts to the specified torque.

Intake Manifold Bolt Torque	kg·m(lb.ft/N·m)
2.2 ± 0.3 (15.9 ± 2.2/21.6 ± 2.9)	

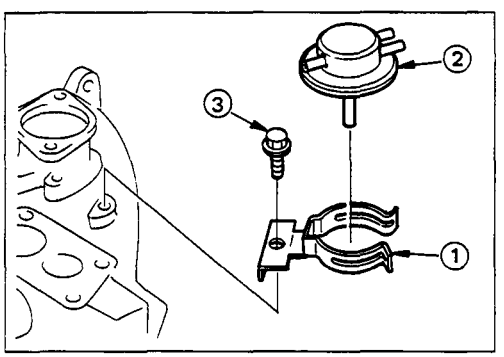

25. B.P. Transducer and Bracket [V]

1) Install the back pressure transducer bracket ① and the back pressure transducer ② to the intake manifold.
2) Tighten the bracket bolts ③ to the specified torque.

B.P. Transducer Bracket Bolt Torque	kg·m(lb.ft/N·m)
1.3 ± 0.5 (9.4 ± 3.6/12.7 ± 4.9)	

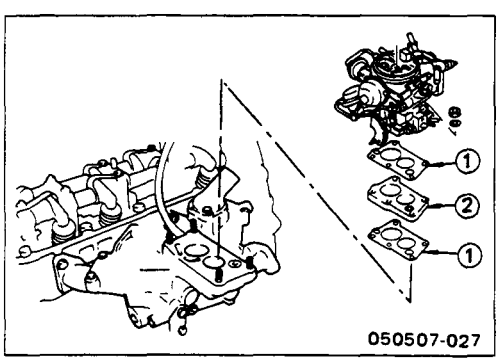

26. Carburetor

1) Install the gaskets ① and the heat insulator ② (if so equipped) to the intake manifold.
2) Install the carburetor to the intake manifold.
3) Use the carburetor wrench to tighten the carburetor nuts to the specified torque.
   Carburetor Wrench: 5-8511-9003-0 (J-26510)

Carburetor Nut Torque	kg·m(lb.ft/N·m)
1.3 ± 0.5 (9.4 ± 3.6/12.7 ± 4.9)	

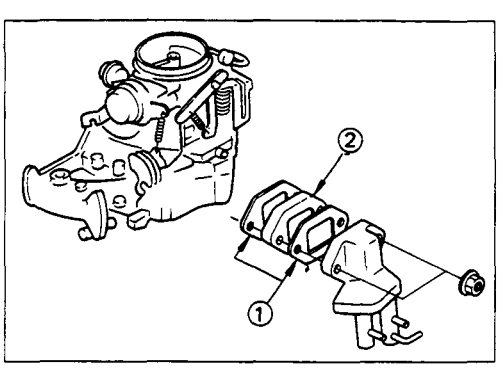

28. Fuel Pump

29. Fuel Damper

1) Install the fuel pump together with the gaskets ① and the heat insulator ② to the cylinder body.
2) Tighten the fuel pump nuts to the specified torque.

Fuel Pump Nut Torque	kg·m(lb.ft/N·m)
2.7 ± 0,5 (19.5 ± 3.6/26.5 ± 4.9)	

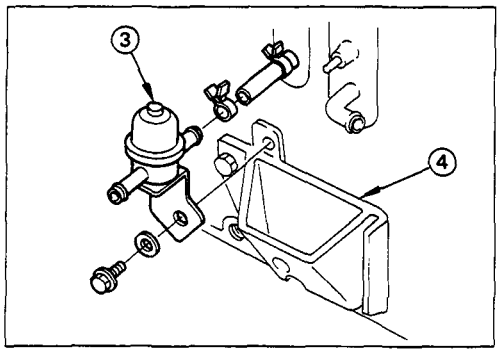

3) Install the fuel damper ③ to the cylinder body ④.
4) Tighten the damper bolts to the specified torque.

Fuel Damper Bolt Torque	kg·m(lb.ft/N·m)
1.9 ± 0.5 (13.7 ± 3.6/18.6 ± 4.9)	

5) Connect the fuel hose between the fuel pump and the damper.

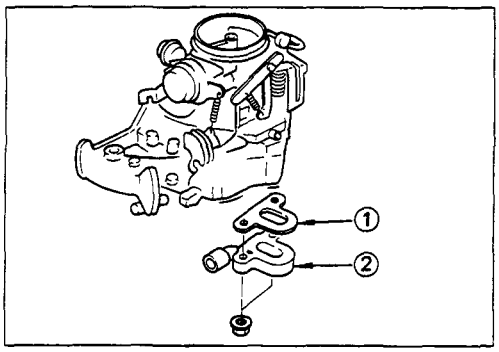

30. EGR Adapter [V]

1) Install the EGR adapter ① together with the gasket ② to the intake manifold.
2) Tighten the adapter nuts to the specified torque.

EGR Adapter Nut Torque	kg·m(lb.ft/N·m)
2.7 ± 0.5 (19.5 ± 3.6/26.5 ± 4.9)	

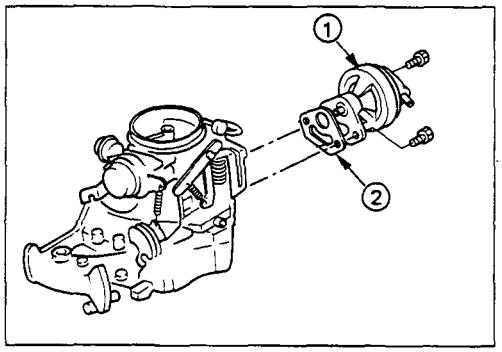

31. EGR Valve [V]

1) Install the EGR valve ① together with the gasket ② to the intake manifold.
2) Tighten the EGR valve bolts to the specified torque.

EGR Valve Bolt Torque	kg·m(lb.ft/N·m)
1.9 ± 0.5 (13.7 ± 3.6/18.6 ± 4.9)	

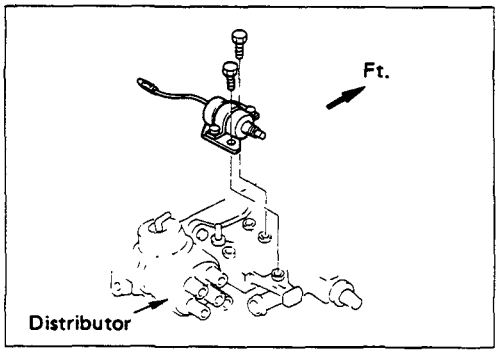

32. Fast Idle Solenoid (For with A/C) [V]

1) Install the fast idle solenoid to the cylinder head.
2) Tighten the solenoid bracket bolts to the specified torque.

Solenoid Bracket Bolt Torque	kg·m(lb.ft/N·m)
1.3 ± 0.5 (9.4 ± 3.6/12.7 ± 4.9)	

33. Ignition Coil [V]

1) Install the ignition coil to the intake manifold.
2) Tighten the ignition coil bolts to the specified torque.

Ignition Coil Bolt Torque	kg·m(lb.ft/N·m)
0.75 ± 0.25 (5.4 ± 1.8/7.4 ± 2.5)	

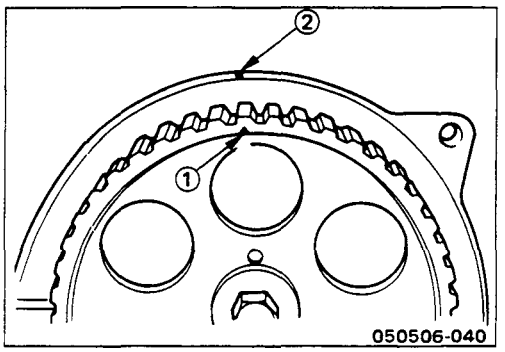

34. Distributor

1) Move the No. 4 cylinder to TDC on the compression stroke.

   Align the camshaft pulley setting mark ① with the front plate setting mark ②.

2) Apply engine oil to the O-rings.

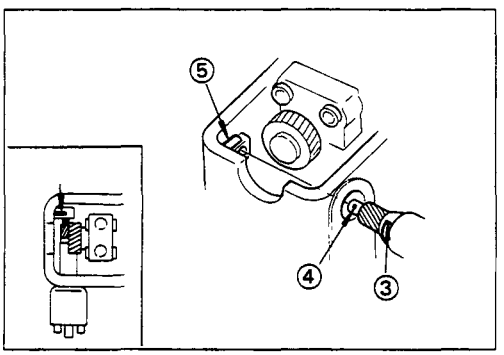

3) Align the distributor case setting mark ③ with the distributor shaft setting mark ④.

4) Install the distributor to the cylinder head.

   Align the distributor shaft setting mark with the cylinder head setting mark ⑤.

5) Tighten the distributor bolts to the specified torque.

Distributor Bolt Torque	kg·m(lb.ft/N·m)
1.9 ± 0.5 (13.7 ± 3.6/18.6 ± 4.9)	

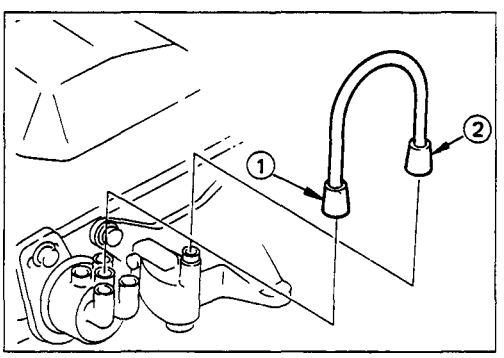

35. High Tension Cable (Ignition Coil to Distributor) [V]

1) Connect the high tension cable red end ① to the distributor.

2) Connect the high tension cable black end ② to the ignition coil.

Note:

Take care not to reverse cable polarity.

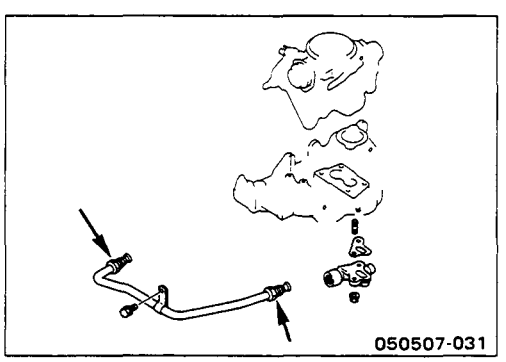

36. EGR Pipe [V]

1) Connect the EGR pipe between the EGR adapter and the exhaust manifold.

2) Tighten the pipe nuts to the specified torque.

EGR Pipe Nut Torque	kg·m(lb.ft/N·m)
4.5 ± 0.5 (32.5 ± 3.6/44.1 ± 4.9)	

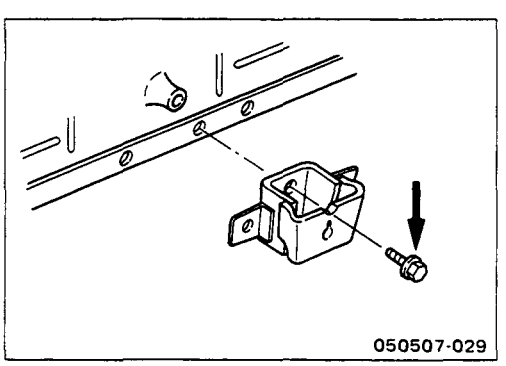

37. Engine Foot with Mounting Rubber

Tighten the engine right side foot bolts to the specified torque.

Engine Foot Bolt Torque	kg·m(lb.ft/N·m)
8.4 ± 0.8 (60.8 ± 5.8/82.4 ± 7.8)	

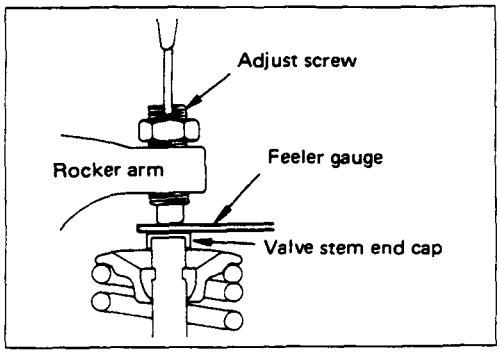

Note on Valve Clearance Adjustment

Valve clearances must be adjusted before the cylinder head cover is reinstalled.

Refer to "VALVE CLEARANCE ADJUSTMENT" in the "SERVICING" Section of this Manual.

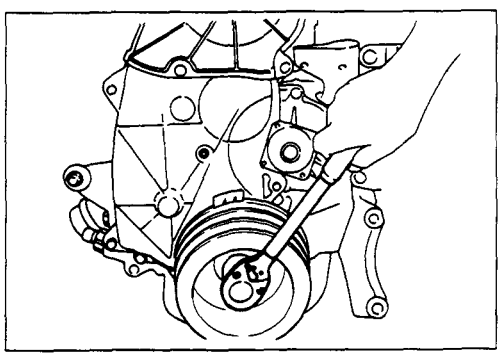

38. Crankshaft Pulley

Install the crankshaft pulley and tighten the pulley bolt to the specified torque.

Crankshaft Pulley Bolt Torque	kg·m(lb.ft/N·m)
12.0 ± 1.5 (86.8 ± 10.8/117.6 ± 14.7)	

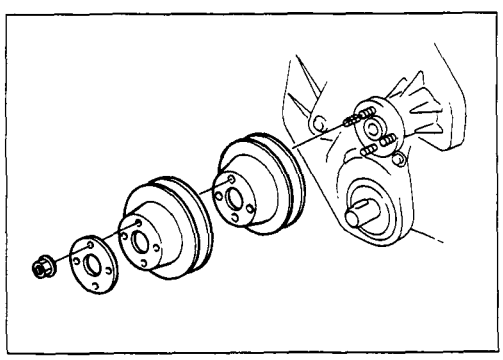

39. Cooling Fan Pulley

1) Install the cooling fan pulley to the water pump.
2) Tighten the pulley nut to the specified torque.

Cooling Fan Pulley Nut Torque	kg·m(lb.ft/
2.7 ± 0.5 (19.5 ± 3.6/26.5 ± 4.9)	

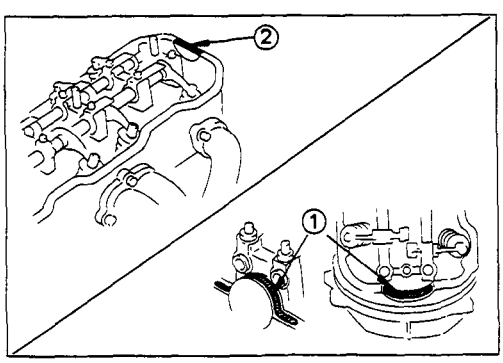

40. Cylinder Head Cover

1) Apply the recommended liquid gasket or its equivalent to the cylinder head No. 1 camshaft bracket arch ① and the rear side of the cylinder plug ②.

   Refer to the illustration.
2) Apply engine oil to the rocker arms and the valve springs.

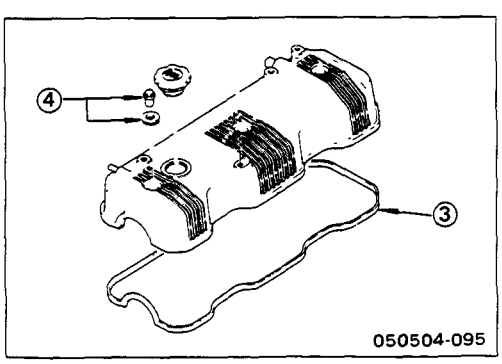

3) Install the cylinder head cover gasket ③ to the cylinder head cover.

   Be absolutely sure that the gasket is correctly positioned.

   There must be no loose areas.
4) Tighten the cylinder head cap nuts ④ to the specified torque.

Cylinder Head Cap Nut Torque	kg·m(lb.ft/N·m)
1.0 ± 0.2 (7.2 ± 1.4/9.8 ± 1.98)	

42. Cooling Fan Drive Belt

43. Compressor Drive Belt

44. Air Pump Drive Belt [V]

1) Install each of the drive belts.
2) Adjust the tension of each of the drive belts.
   Refer to "SERVICING — DRIVE BELT ADJUSTMENT" in this Manual.

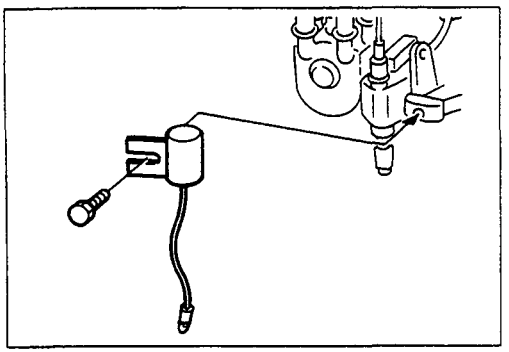

45. Condenser [V]

The condenser must be positioned horizontally.

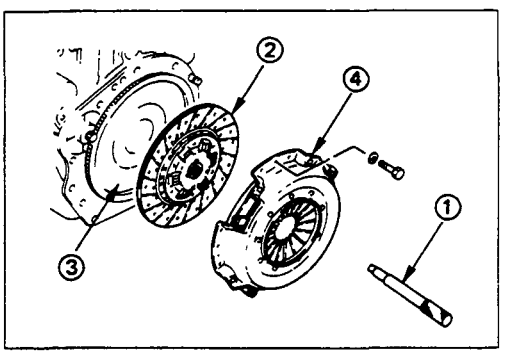

46. Clutch Pressure Plate Assembly and Driven Plate Assembly

1) Clean the flywheel surface.
2) Clean the driven plate facing surface.
3) Use the clutch pilot aligner ① to install the driven plate assembly ② to the flywheel ③.
   Clutch Pilot Aligner: 5-8525-3001-0 (J-24547)

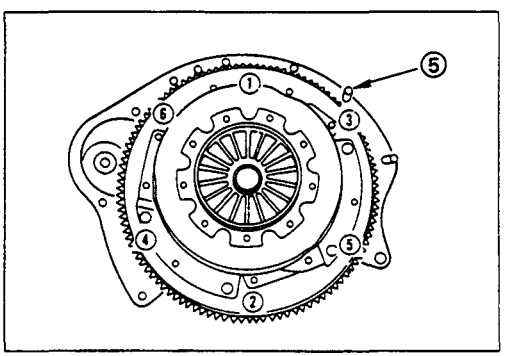

4) Clean the pressure plate surfaces.
5) Align the pressure plate assembly ④ with the flywheel knock pin ⑤.
6) Install the pressure plate assembly to the flywheel.
7) Tighten the clutch cover bolts to the specified torque a little at a time in the numerical order shown in the illustration.

Clutch Cover Bolt Torque	kg·m(lb.ft/N·m)
1.9 ± 0.5 (13.7 ± 3.6/18.6 ± 4.9)	

0600

LUBRICATING SYSTEM

06010102

MAIN DATA AND SPECIFICATIONS

Item	Description
Oil pump type	Trochoid
Oil pressure switch operating pressure kg/cm^2(psi/kPa)	0.2 — 0.5 (2.8 — 7.1/19.6 — 49.0)
Oil filter type	Full flow with cartridge paper element
Regulating valve opening pressure kg/cm^2(psi/kPa)	4 — 5 (56.9 — 71.1/392.4 — 490.5)
Safety valve opening pressure kg/cm^2(psi/kPa)	0.8 — 1.2 (11.4 — 17.1/78.4 — 117.6)

0602

GENERAL DESCRIPTION

06020102

LUBRICATING OIL FLOW

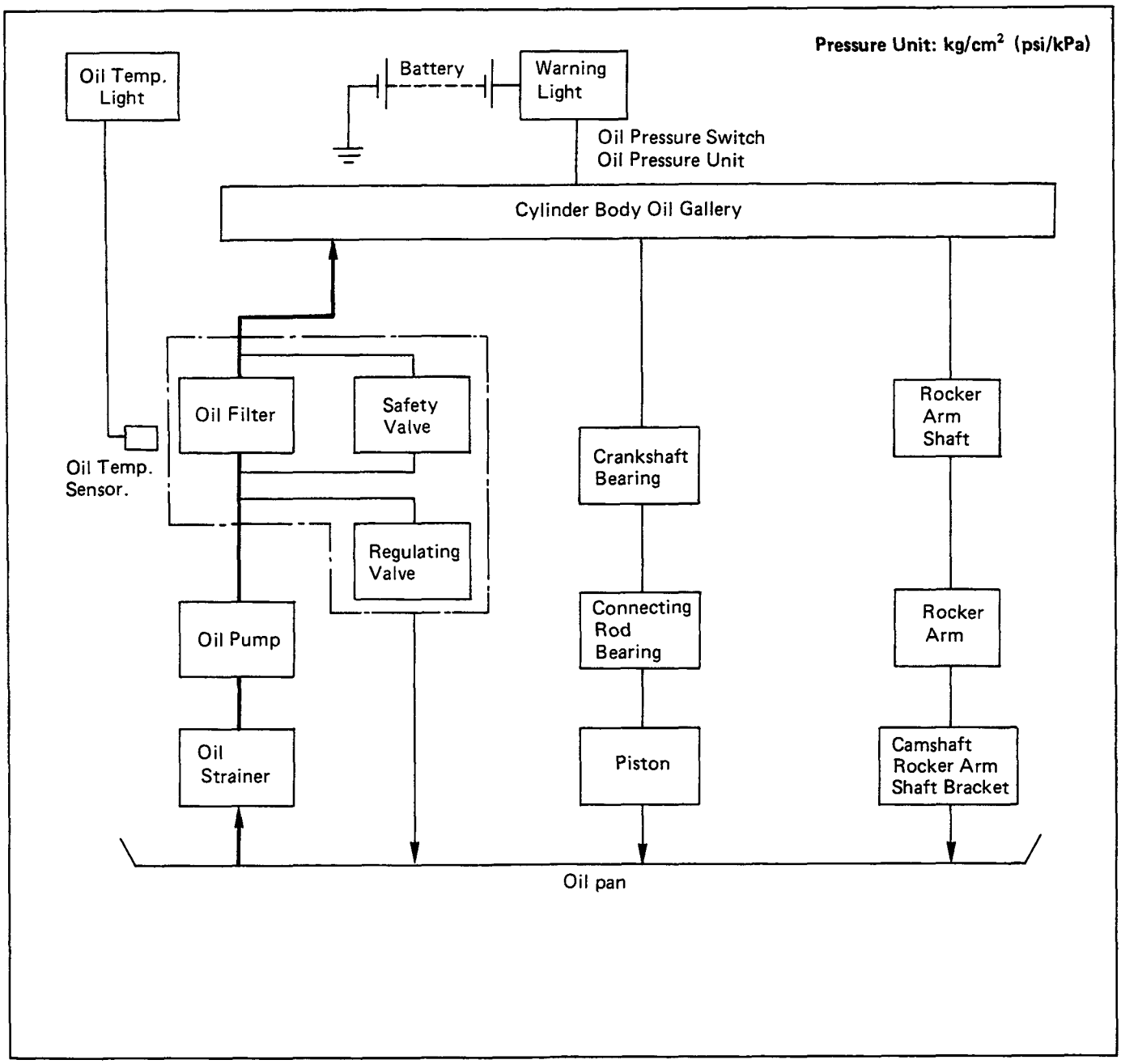

The 4Z Series engine lubricating system is a full flow pressurized circulation type.

Lubricating oil is pumped from the oil pump to the cylinder body oil gallery through the oil filter. It is then delivered to the vital parts of the engine from the cylinder body oil gallery.

Only Saudi Arabia;

The OIL TEMP. indicator light on the instrument panel illuminates when the engine oil temperature becomes high (approx. 135°C).

06020202

OIL PUMP AND OIL FILTER

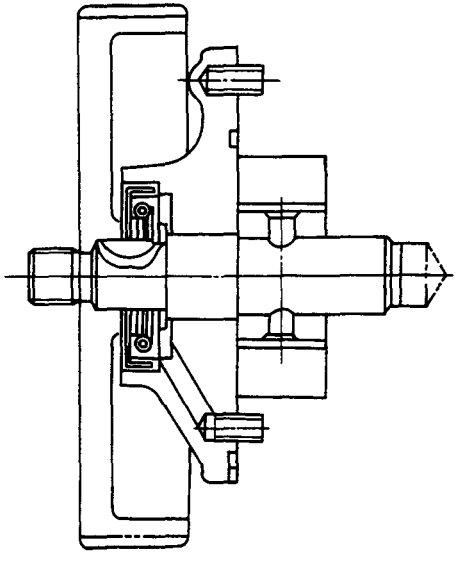

060202-006

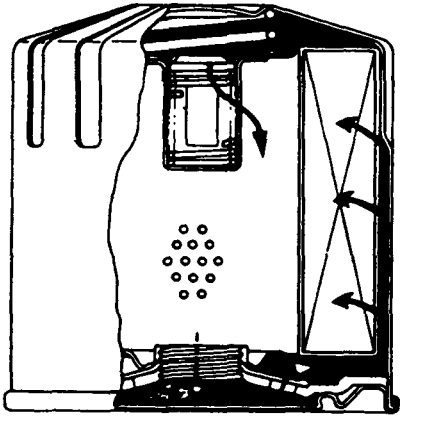

The trochoid oil pump is built in to the front of the cylinder body. It is driven by the timing pulley and the timing belt.

The oil filter with easily replaceable cartridge paper element is at the lower right front side of the engine.

06030002

OIL PUMP

06030102A

DISASSEMBLY

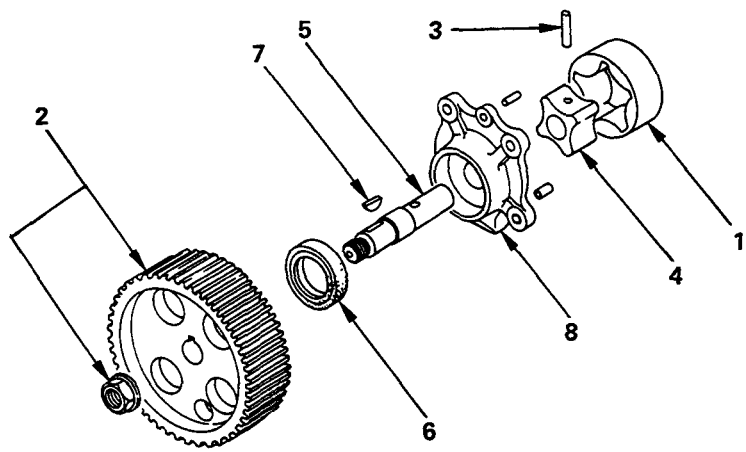

060301-003

06030102B

Disassembly Steps

1. Oil pump outer rotor
2. Oil pump drive pulley
3. Inner rotor pin
4. Oil pump inner rotor
5. Oil pump shaft
6. Oil seal
7. Oil pump shaft key
8. Oil pump body

060302

INSPECTION AND REPAIR

Make the necessary adjustments, repairs, and part replacements if excessive wear or damage is discovered during inspection.

06030202A

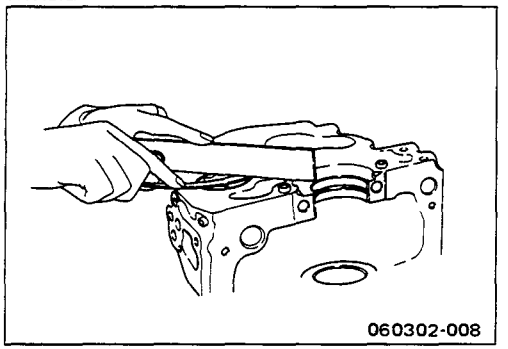

Outer Rotor and Cylinder Body Clearance

1. Install the outer rotor to the cylinder body.
2. Use a feeler gauge and straight edge to measure the clearance between the outer rotor surface and the cylinder body.

   If the clearance between the outer rotor surface the cylinder body exceeds the specified limit, t pump gear set (outer rotor, rotor pin, inner rotor, and oil pump shaft) must be replaced.

Outer Rotor Surface and Cylinder Body Clearance — mm(in)

Standard	Limit
0.04 — 0.09 (0.0016 — 0.0035)	0.15 (0.0059)

06030202B

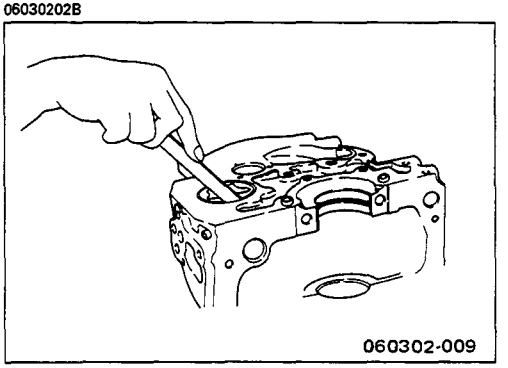

3. Use a feeler gauge to measure the clearanc tween the outer rotor sliding face and the cy body.

   If the clearance between the outer rotor sliding fa and the cylinder body exceeds the specified limit, the oil pump gear set (outer rotor, rotor pin, inner rotor, and oil pump shaft) and/or the cylinder body must be replaced.

Outer Rotor Sliding Face and Cylinder Body Clearance — mm(in)

Standard	Limit
0.24 — 0.36 (0.009 — 0.014)	0.40 (0.016)

0603020302

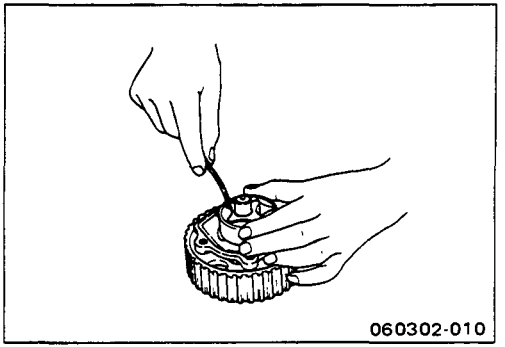

Outer and Inner Rotor Clearance

Use a feeler gauge to measure the clearance between the outer and inner rotor.

If the clearance between the outer and inner rotor exceeds the specified limit, the oil pump gear set (outer rotor, rotor pin, inner rotor, and oil pump shaft) must be replaced.

Outer and Inner Rotor Clearance mm(in)

Standard	Limit
0.13 – 0.15 (0.005 – 0.006)	0.20 (0.008)

New Inner Rotor Installation

1. Install the new inner rotor to the oil pump shaft.
2. Insert the rotor pin into the pin hole.
3. Caulk both sides of the rotor pin.

Note:

Do not allow the rotor pin caulking to project from the rotor.

060303A

REASSEMBLY

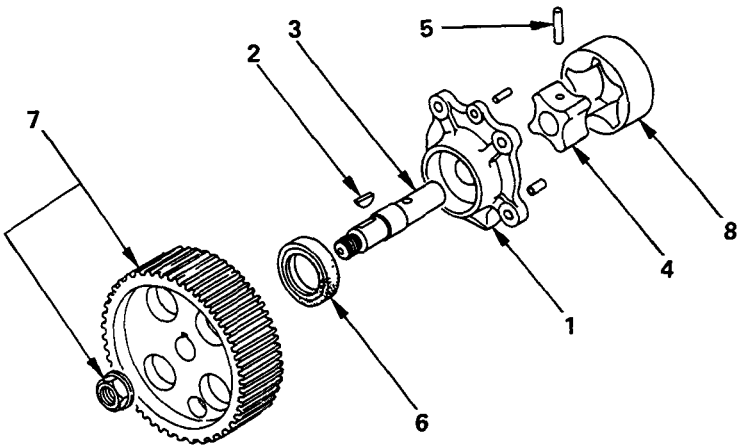

060303-005

0603030002

Reassembly Steps

1. Oil pump body
2. Oil pump shaft key
3. Oil pump shaft
4. Oil pump inner rotor
5. Inner rotor pin
6. ▲ Oil seal
7. ▲ Oil pump drive pulley
8. Oil pump outer rotor

06030301

Important Operations

0603030102

6. Oil Seal

1) Apply engine oil to the oil seal lip circumference and the oil seal outer circumference and install it using installer.

   Installer: J-26587

0603030103

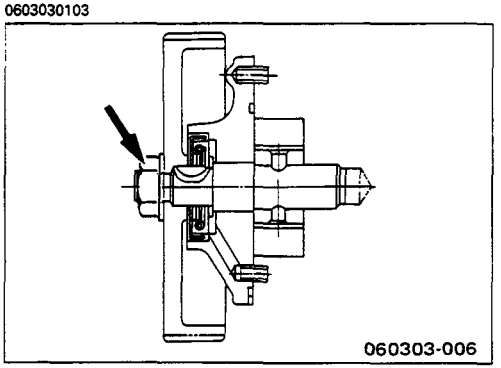

7. Oil Pump Drive Pulley

Tighten the oil pump drive pulley bolt to the specified torque.

Drive Pulley Nut Torque	kg·m(lb.ft/N·m)
7.7 ± 1.0 (55.7 ± 7.2/75.5 ± 9.8)	

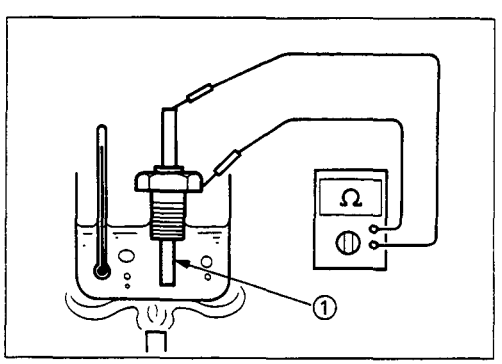

Oil Temperature Sensor (Only Saudi Arabia)

1. Submerge the oil temperature sensor sensing portion ① in water.
2. Connect a circuit tester to the oil temperature sensor.
3. Use a burner to heat the water.
4. Check the oil temperature sensor resistance at the specified temperature.

Oil Temperature Sensor Resistance	kΩ
at 25°C (77°F)	Approximately 10
at 100°C (212°F)	Approximately 1

DELTA OPEL ISUZU SUZUKI

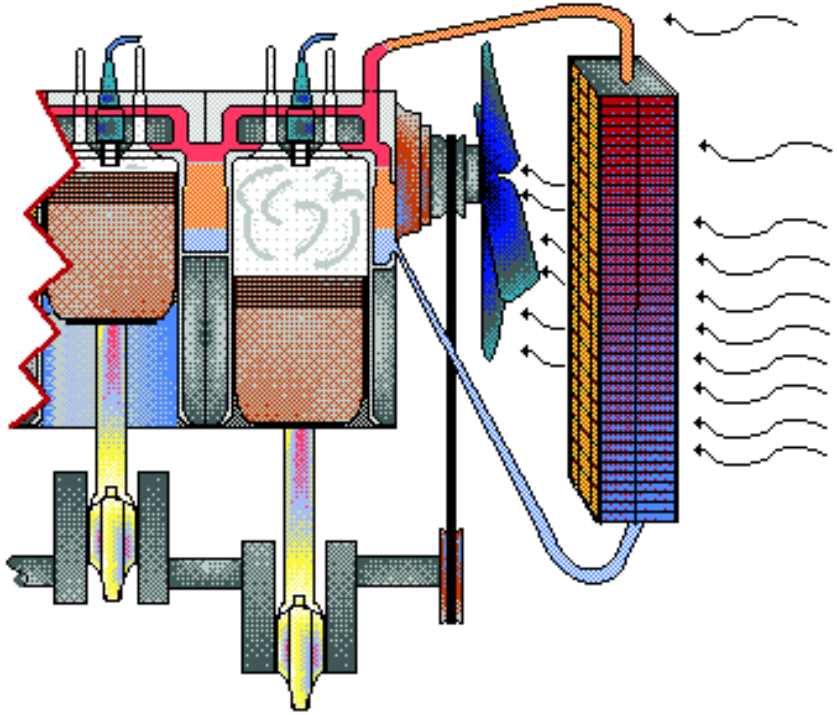

KB TF 140
Cooling System

ISUZU

- Specs.
- Water Pump
- Thermostat
- Fan

SECTION 6B
ENGINE COOLING

TABLE OF CONTENTS

PAGE

Main Data and Specifications ..... 6B— 2
General Description ..... 6B— 3
Water Pump ..... 6B— 5
  Removal and Installation ..... 6B— 5
  Disassembly ..... 6B— 7
  Inspection and Repair ..... 6B— 9
  Reassembly ..... 6B—10
Thermostat ..... 6B—13
  Removal and Installation ..... 6B—13
  Inspection and Repair ..... 6B—14
Fan Clutch with Cooling Fan ..... 6B—16

MAIN DATA AND SPECIFICATIONS

Item		Description	
		4ZC1	4ZE1
Water pump type		Centrifugal impeller	
Pump to crankshaft speed ratio (to 1)		1.22	1.23
Delivery volume	lit(US/UK gal)/min	155 (41.0/34.8)	190 (50.2/41.8)
Pump speed at 6000 rpm			
Pump bearing type		Double row shaft	
Thermostat type		Wax pellet with jiggle valve	
Valve initial opening temperature	°C(°F)	82 (180)	
Valve full opening temperature	°C(°F)	95 (203)	
Valve lift at fully open position	mm(in)	8 (0.31)	

0702

GENERAL DESCRIPTION

07020102

COOLANT FLOW

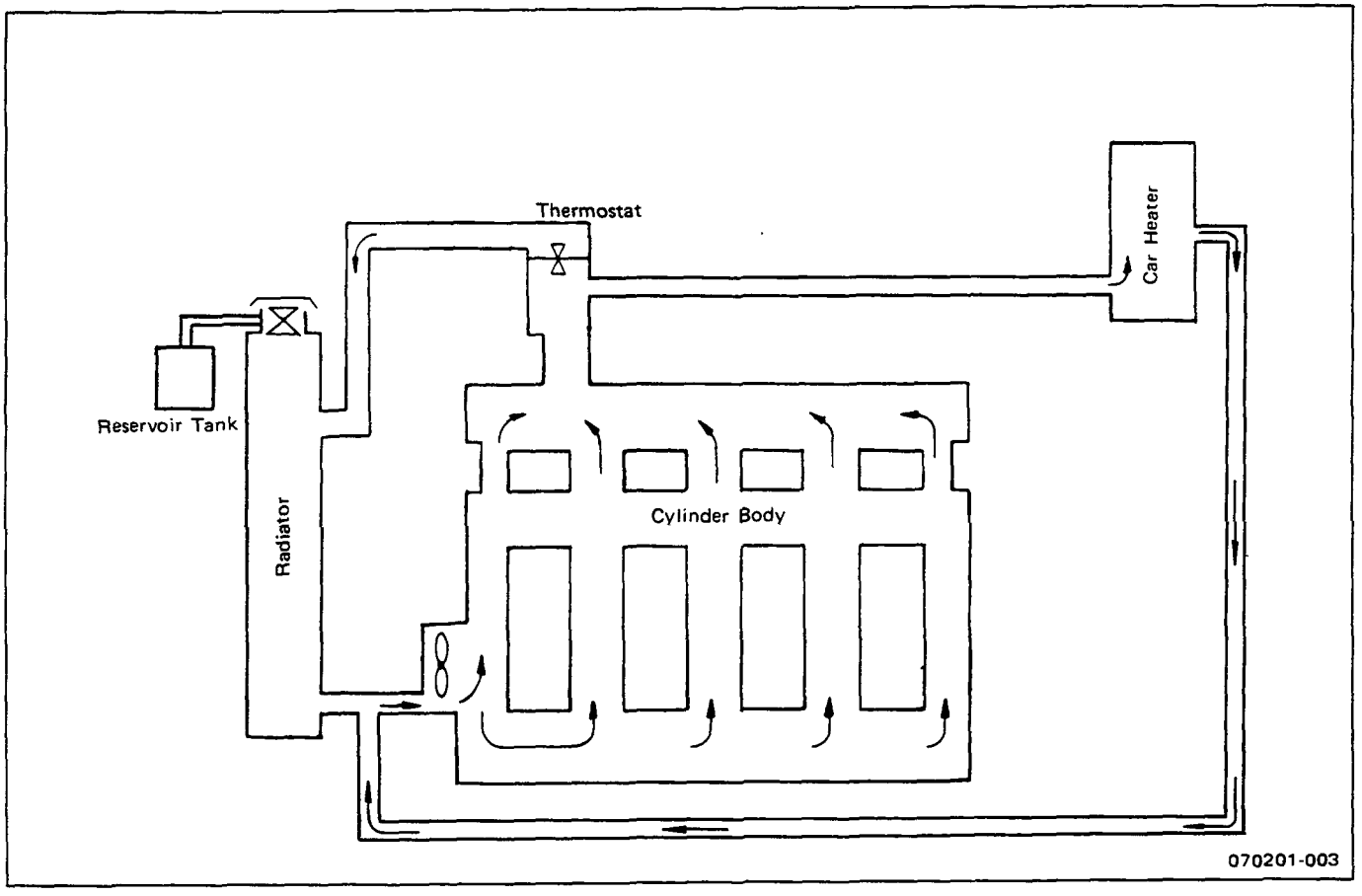

The engine cooling system consists of the radiator, the water pump, the cooling fan, and the thermostat.

To quickly increase cold engine coolant temperature for smooth engine operation, the coolant is circulated by the water pump and thermostat through the bypass hose and back to the cylinder body. The coolant does not circulate through the radiator.

When the coolant temperature reaches the specified level 82°C (180°F), the thermostat will begin to open and a gradually increasing amount of coolant will circulate through the radiator.

The thermostat will be fully open when the coolant temperature reaches the specified upper level 95°C (203°F). All of the coolant is now circulating through the radiator for effective engine cooling.

070202A
WATER PUMP

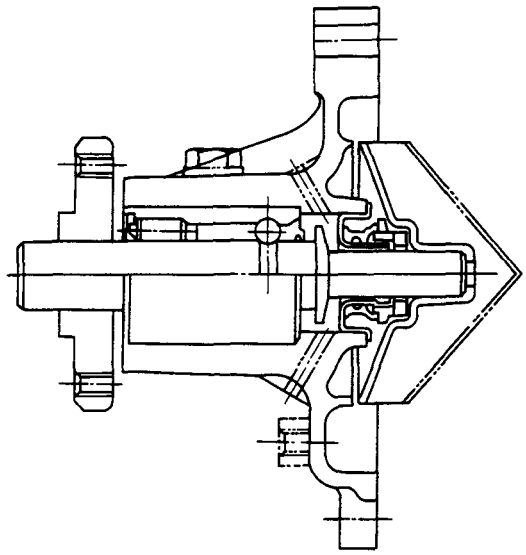

070202-004

070202B
THERMOSTAT

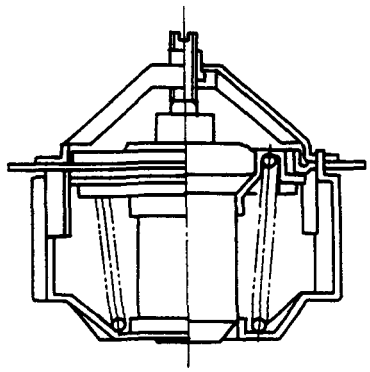

070202-005

A centrifugal type water pump force fully circulates the coolant through the cooling system.

A wax pellet type thermostat is used.

The jiggle valve accelerates engine warm-up.

WATER PUMP

REMOVAL AND INSTALLATION

Read this Section carefully before performing any removal and installation procedure. This Section gives you important points as well as the order of operation. Be sure that you understand everything in this Section before you begin.

Important Operations — Removal

[V] : Optional on some models

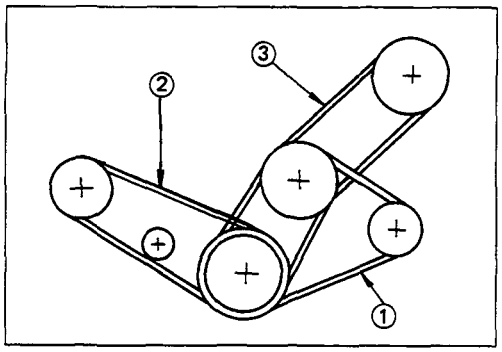

Drive Belt

Remove the cooling fan belt ①, the compressor belt ② [V] , and the air pump drive belt ③ [V] .

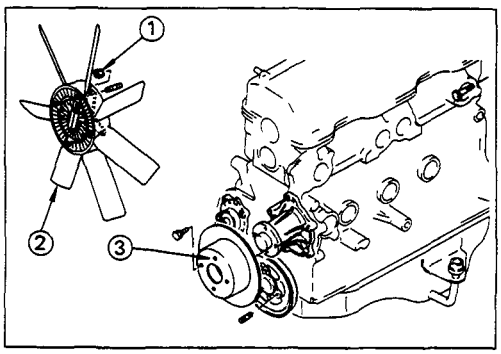

Cooling Fan and Cooling Fan Pulley

1. Loosen the cooling fan, and the fan pulley nuts ①.
2. Remove the cooling fan ② together with the fan pulley ③.

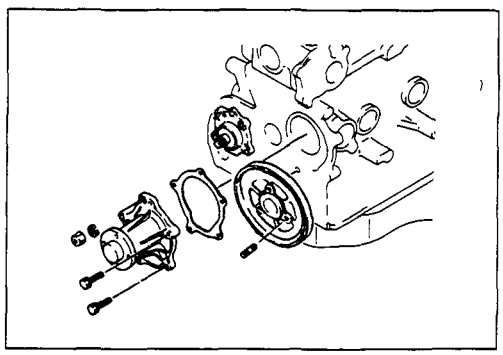

Water Pump

1. Remove the water pump nuts and bolts.
2. Remove the water pump.

Important Operations — Installation

Follow the removal procedure in the reverse order to perform the installation procedure. Pay careful attention to the important points during the installation procedure.

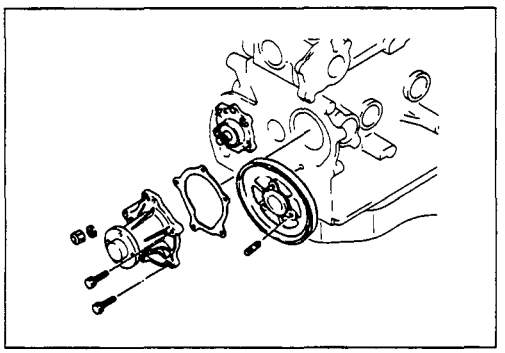

Water pump

1. Install the water pump to the cylinder body.
2. Tighten the water pump nuts and bolts to the specified torque.

Water Pump Bolt Torque	kg·m(lb.ft/N·m)
2.7 ± 0.5 (19.5 ± 3.6/26.5 ± 4.9)	

Water Pump Nut Torque	kg·m(lb.ft/N·m)
1.5 ± 0.5 (13.7 ± 3.6/18.6 ± 4.9)	

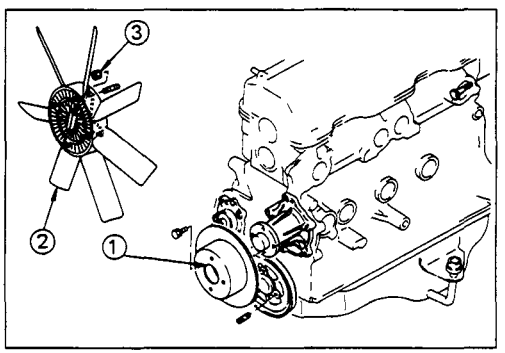

Cooling Fan Pulley and Cooling Fan

1. Install the fan pulley ① together with the cooling fan ②.
2. Tighten the fun pulley nuts ③ to the specified torque.

Fan Pulley Nut Torque	kg·m(lb.ft/N·m)
2.7 ± 0.5 (19.5 ± 3.6/26.5 ± 0.5)	

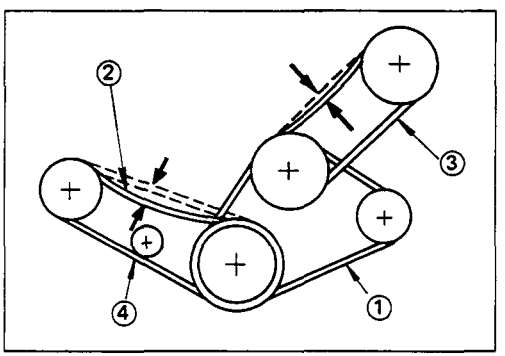

Drive Belt

1. Install the cooling fan belt ①, the compressor belt ② V , and the air pump belt ③ V .
2. Apply tension to each drive belt by moving the alternator, the compressor idler pulley ④, and the air pump.
3. Apply a force of 10 kg (22 lb/98 N) to the drive belt mid-portion to check the drive belt deflection.

Cooling Fan Drive Belt Deflection	mm(in)
10 (0.39)	

07030002A

DISASSEMBLY

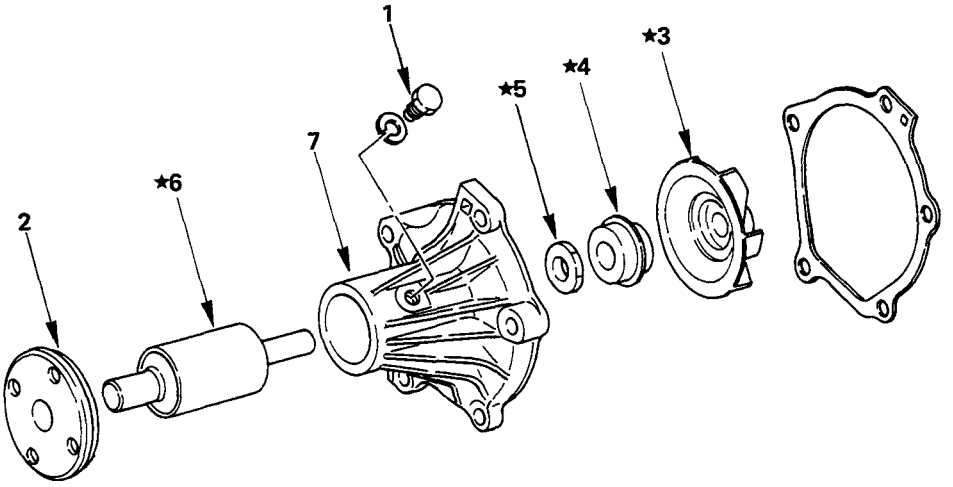

★ Repair kit

070301-006

07030002B

Disassembly Steps

1. Set screw
2. ▲ Cooling fan center
3. ▲ Impeller
4. ▲ Seal unit
5. Thrower
6. ▲ Bearing unit
7. Water pump body

07030101, 0703010101

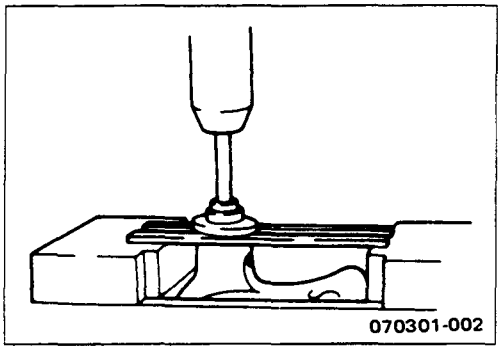

Important Operations

2. Cooling Fan Center

Remove the fan center with a bench press and a bar.

070301010202

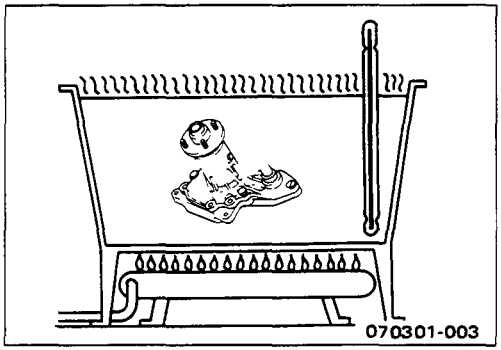

3. Impeller

4. Seal Unit

6. Bearing Unit

1) Heat the pump body in hot water (80 – 90°C/176 – 194°F).

0703010102B

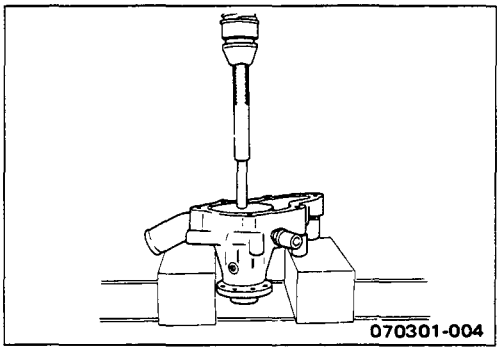

2) Remove the impeller, the seal unit, and the bearing unit with a bench press and a bar.

Note:

Do not drive out the impeller with a hammer. Damage to the impeller will result.

070302

INSPECTION AND REPAIR

Make the necessary adjustments, repairs, and part replacements if excessive wear or damage is discovered during inspection.

07030201

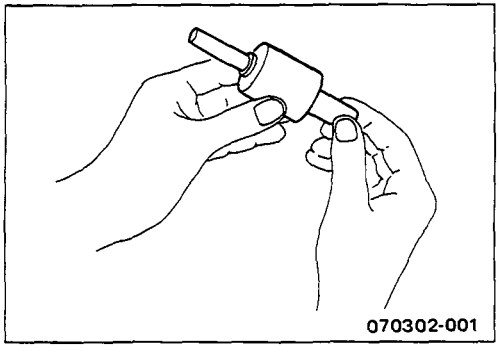

Bearing Unit

Check the bearing for abnormal noise, binding, and other abnormal conditions.

070303A

REASSEMBLY

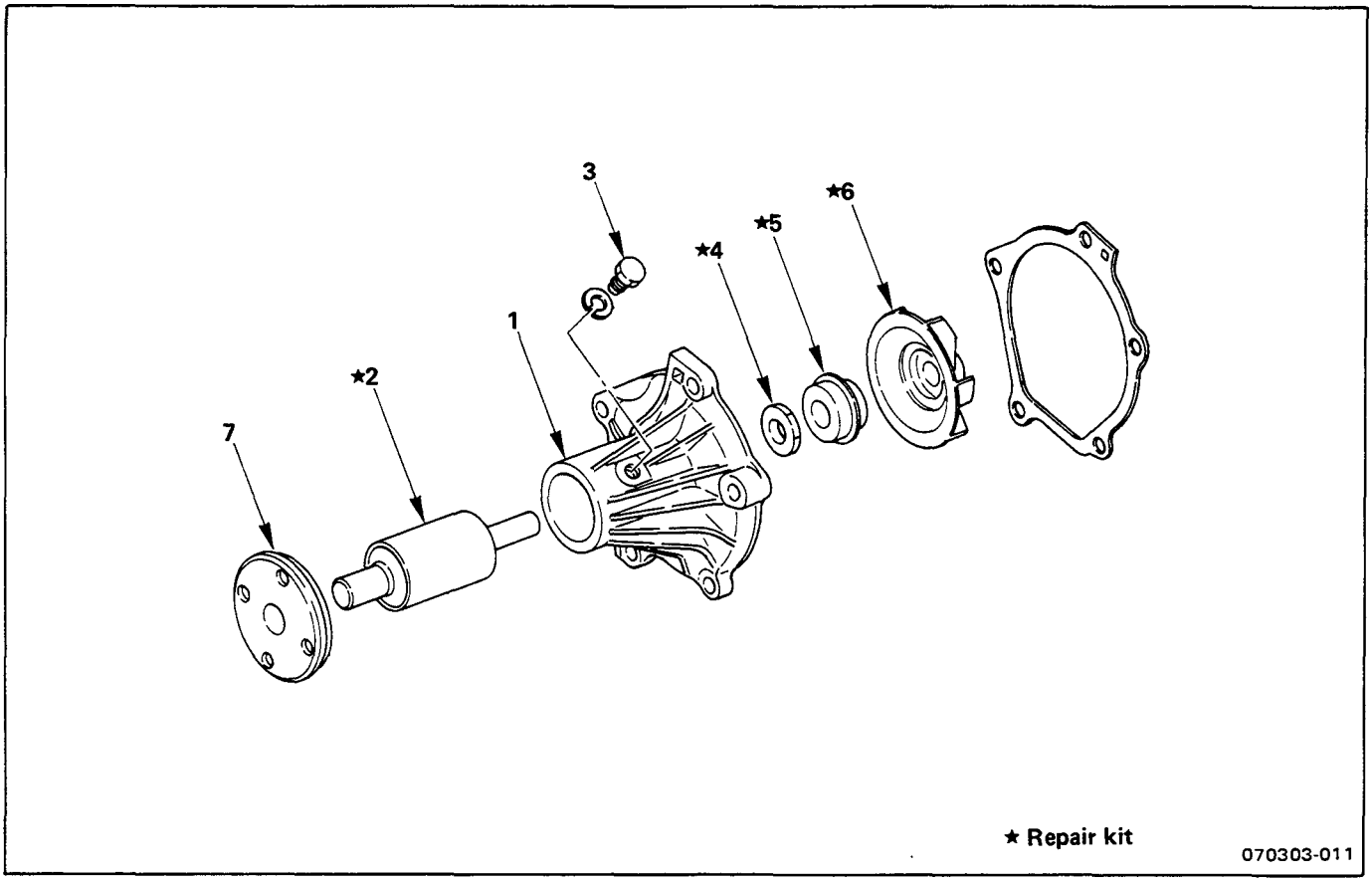

0703030001B

Reassembly Steps

1. Water pump body
▲ 2. Bearing unit
▲ 3. Set screw
4. Thrower
▲ 5. Seal unit
▲ 6. Impeller
▲ 7. Cooling fan center

07030301

Important Operations

0703030101

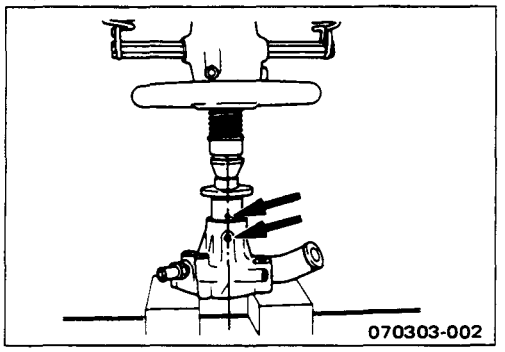

2. Bearing Unit

3. Set Screw

1) Align the bearing set screw hole with the pump body set screw hole.
2) Press the bearing unit into place.
3) Secure the bearing with the set screw.

0703030102A

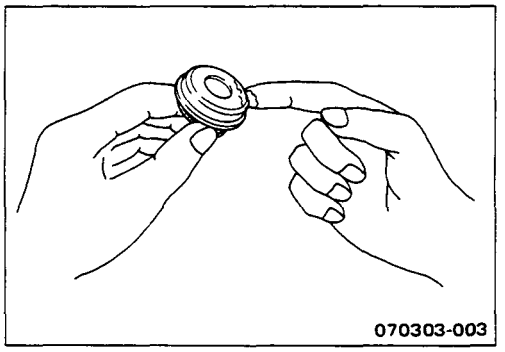

5. Seal Unit

6. Impeller

1) Apply the recommended liquid gasket or its equivalent to the seal unit outer periphery.
2) Install the seal unit.

070303010202

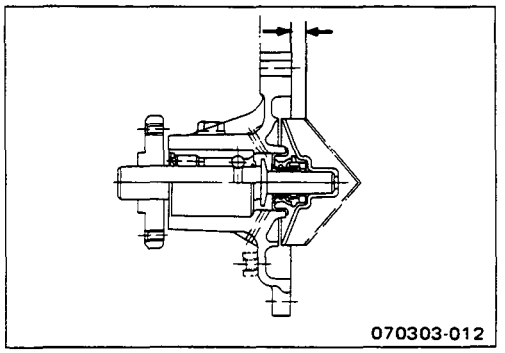

3) Use a bench press to slowly force the impeller into place until the impeller installed distance from the water pump body face is equal to the specified value.

Impeller Projection (Reference) mm(in)

	Standard
4ZC1	8.5 – 8.9 (0.33 – 3.66)
4ZE1	5.5 – 5.9 (0.21 – 0.23)

070303010302

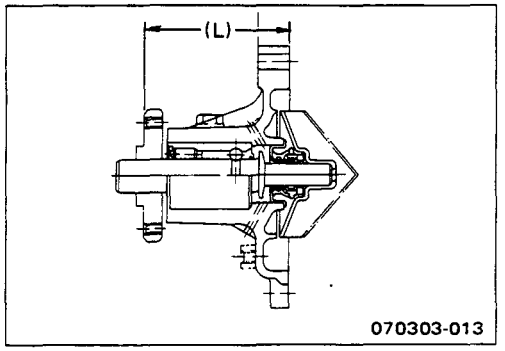

7. Cooling Fan Center

Measure the distance between the cooling fan fitting face and the rear cover fitting face.

Cooling Fan Center Distance (L) mm(in)

	Standard
4ZC1	92.3 – 92.9 (3.63 – 3.66)
4ZE1	99.2 – 99.8 (3.90 – 3.93)

0703030103B

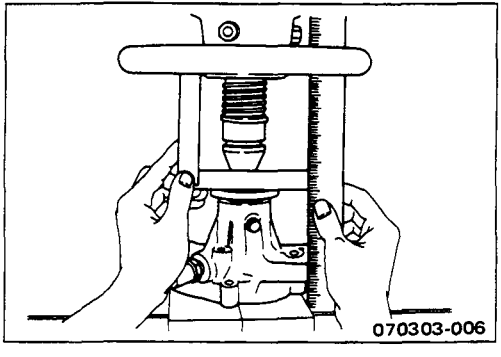

Notes:

1. **The fan center and the impeller are installed to the water pump shaft with a press.**

   Never attempt to remove and reinstall the fan center and the impeller a second time. Replace the entire water pump assembly.

   Removing and reinstalling the fan center and the impeller a second time may result in the breakdown of the water pump during engine operation and subsequent serious overheating problems.

2. **The water pump assembly must be replaced whenever the fan center and impeller pressure force falls below 200 kg (441 lb/1,960 N).**

3. **Do not attempt to strike the bearing into position with a hammer or similar object. Damage to the bearing will result.**

THERMOSTAT

REMOVAL AND INSTALLATION

Read this Section carefully before performing any removal and installation procedure. This Section gives you important points as well as the order of operation. Be sure that you understand everything in this Section before you begin.

Important Operations — Removal

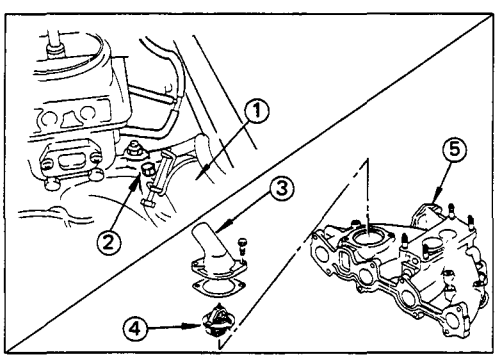

Thermostat

1. Partially drain the engine coolant.
2. Disconnect the radiator upper hose ① from the water outlet side ②.
3. Remove the outlet pipe ③, and the thermostat ④ from the intake manifold ⑤.

Important Operations — Installation

Follow the removal procedure in the reverse order to perform the installation procedure. Pay careful attention to the important points during the installation procedure.

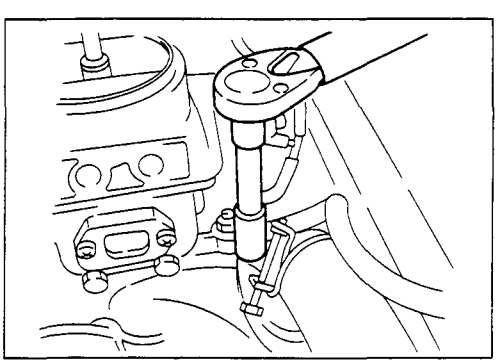

Water Outlet Pipe

1. Install the outlet pipe with thermostat to the intake manifold.
2. Tighten the outlet pipe bolts to the specified torque.

Outlet Pipe Bolt Torque	kg·m(lb.ft/N·m)
1.9 ± 0.5 (13.7 ± 3.6/18.6 ± 4.9)	

070401

INSPECTION AND REPAIR

Make the necessary adjustments, repairs, and part replacements if excessive wear or damage is discovered during inspection.

07040102

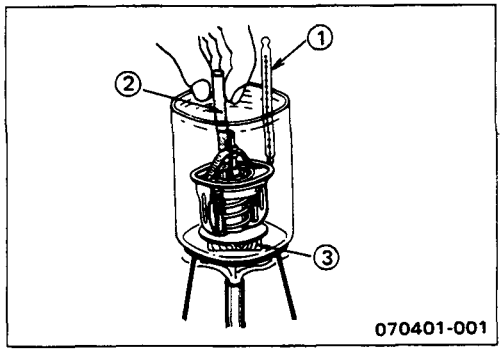

Operating Test

1. Completely submerge the thermostat in water.
2. Heat the water.

   Stir the water constantly to avoid direct heat being applied to the thermostat.
3. Check the thermostat initial opening temperature.

Thermostat Initial Opening Temperature	°C(°F)
82 (180)	

4. Check the thermostat full opening temperature.

Thermostat Full Opening Temperature	°C(°F)
95 (203)	

Valve Lift as Full Open Position	mm(in)
8 (0.31)	

① Thermometer
② Agitating rod
③ Wooden piece

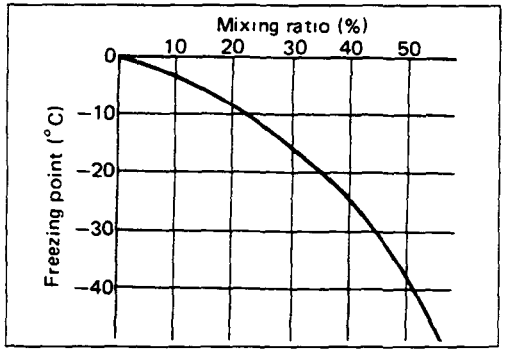

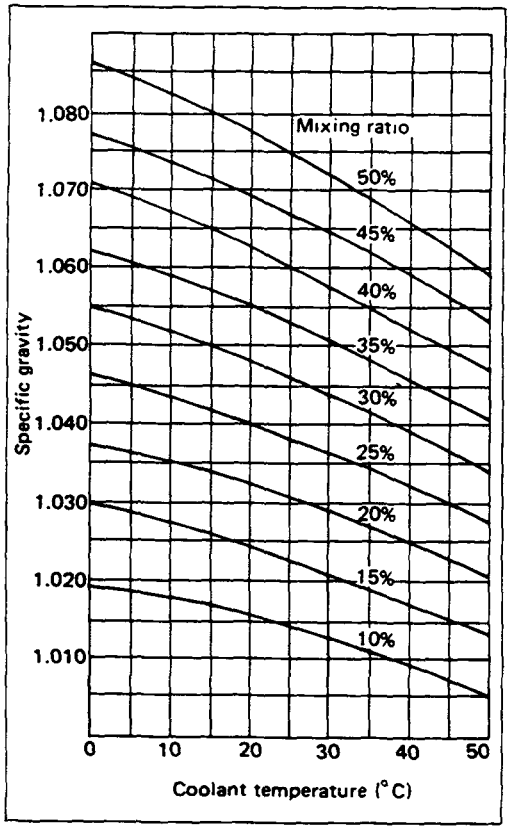

ANTI-FREEZE SOLUTION

1. Relation between Mixing Ratio and Freezing Point

Freezing temperature of the engine coolant varies with the ratio of anti-freeze solution in water.

Proper mixing ratio can be determined by referring to the chart. Supplemental inhibitors or additives claiming to increase cooling capability that have not been specifically approved by Isuzu are not recommended for addition to the cooling system.

2. Calculation on Mixing Ratio

$$\text{Mixing Ratio} = \frac{\text{Anti-freeze solution (lit/gal.)}}{\text{Anti-freeze solution (lit/gal.)} + \text{Water (lit/gal.)}}$$

Note:

Anti-freeze solution + Water = 8.6 lit. (2.2 US gal./1.9 UK gal.) for 4ZC1 or 9.0 lit. (2.3 US gal./2.0 UK gal.) for 4ZD1/4ZE1.

3. Mixing Ratio

Check the specific gravity of engine coolant in the cooling system at temperature ranges from 0°C (32°F) to 50°C (122°F) using a suction type hydrometer, then determine the density of the coolant by referring to the table at the left.

FAN CLUTCH WITH COOLING FAN

INSPECTION AND REPAIR

Make necessary correction or parts replacement if wear, damage or any other abnormal condition are found through inspection.

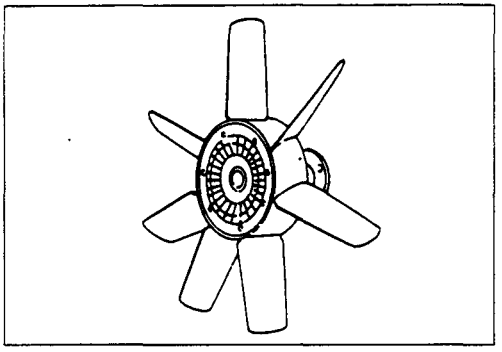

Visually inspect for damage, leak (silicon grease) or other abnormal conditions.

1. Inspection (on-vehicle)

1) Turn the fan clutch by hand when in a low temperature condition before starting the engine, and confirm that it can be turned readily.
2) Start the engine to warm it up until the temperature at the fan clutch portion gets to around 80°C. Then stop the engine and confirm that the fan clutch can be turned with considerable effort (clutch torque) when turned by hand.
   If the fan clutch rotates more readily, however, this indicates that the silicon grease is leaking internally. Replace the fan clutch with a new one.

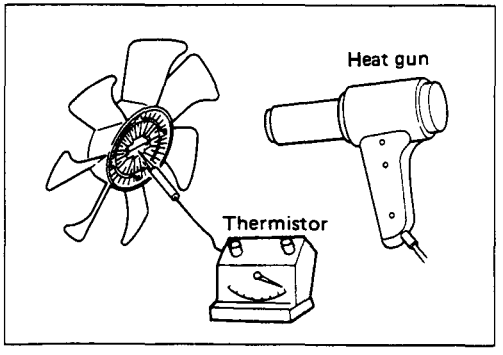

2. Inspection (in unit)

Warm up the bimetal of the fan clutch by using the heat gun until the temperature gets to about 80°C when measured with the thermistor. Then confirm that the fan clutch can be turned with considerable effort (clutch torque).
If the fan clutch retates more readily at this time, this indicates that the silicon grease is leaking internally.
Replace the fan clutch with a new one.

DELTA OPEL ISUZU SUZUKI

Hi - Tech

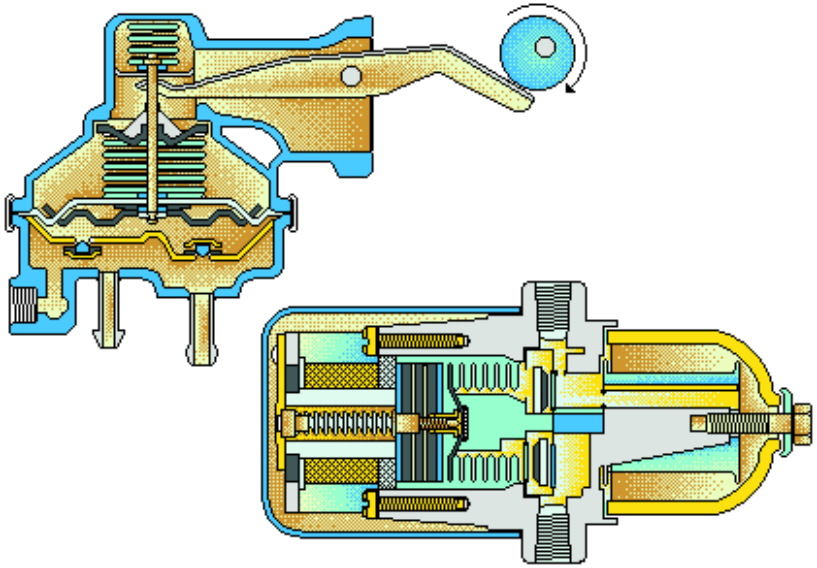

Index

Pump

Carb

Tank

KB TF 140
Fuel System - Petrol

ISUZU

SECTION 6C
FUEL SYSTEM

TABLE OF CONTENTS

PAGE

Main Data and Specifications ..... 6C— 2
General Description ..... 6C— 4
Carburetor ..... 6C—10
Removal and Installation ..... 6C—10
Disassembly (Nippon Kikaki) ..... 6C—13
Inspection and Repair ..... 6C—18
Reassembly ..... 6C—23
Disassembly (Hitachi) ..... 6C—29
Inspection and Repair ..... 6C—35
Reassembly ..... 6C—40
Fuel Pump ..... 6C—44
Removal and Installation ..... 6C—44
Inspection and Repair ..... 6C—45
Fuel Filter ..... 6C—47
Removal and Installation ..... 6C—47
Fuel Tank ..... 6C—49
Removal and Installation ..... 6C—49
Inspection and Repair ..... 6C—51
Troubleshooting ..... 6C—52

MAIN DATA AND SPECIFICATIONS

Item		Description 4ZD1
Carburettor model		21E304-M82
Manufacturer		Nippon Kikai
Type		Stromberg 2-barrel 2-stage
Fuel pressure	kg/cm²(psi/kPa)	0.24 (3.4/23.5)
Jet orifice diameters		
Main jet	(P) mm(in)	1.16 (0,046)
	(S) mm(in)	1.70 (0,067)
Main air bleed	(P) mm(in)	0.60 (0.024)
	(S) mm (in)	0.60 (0.024)
Slow jet	(P) mm(in)	0.52 (0.020)
	(S) mm(in)	0.80 (0.031)
Slow air bleed	(P1) mm(in)	0.80 (0.031)
	(S) mm(in)	1.20 (0.047)
	(P2) mm(in)	1.65 (0.065)
Slow economizer	mm(in)	1.60 (0.063)
Power jet	mm(in)	0.55 (0.022)
Air jet	mm(in)	2.40 (0.094)
Fuel pump		Mechanical diaphragm
Fuel filter		Paper (Cartridge type)

NOTES:

(P) = Primary

(S) = Secondary

MAIN DATA AND SPECIFICATIONS

Item		Description 4ZE1
Carburettor model		DCR384-205, DCR384-206
Manufacturer		Hitachi
Type		Stromberg 2-barrel 2-stage
Fuel pressure	kg/cm²(psi/kPa)	0.25 (3.6/24.5)
Jet orifice diameters		
Main jet	(P)	#133
	(S)	#180
Main air bleed	(P)	#85
	(S)	#60
Slow jet	(P)	#50
	(S)	#100
Slow air bleed	(P1)	#160
Slow economizer		#1.80
Power jet		#50
Fuel pump		Mechanical diaphragm
Fuel filter		Paper (Cartridge type)

NOTES:

(P) = Primary

(S) = Secondary

0802

GENERAL DESCRIPTION

080206

CARBURETOR

Nikki Carburetor

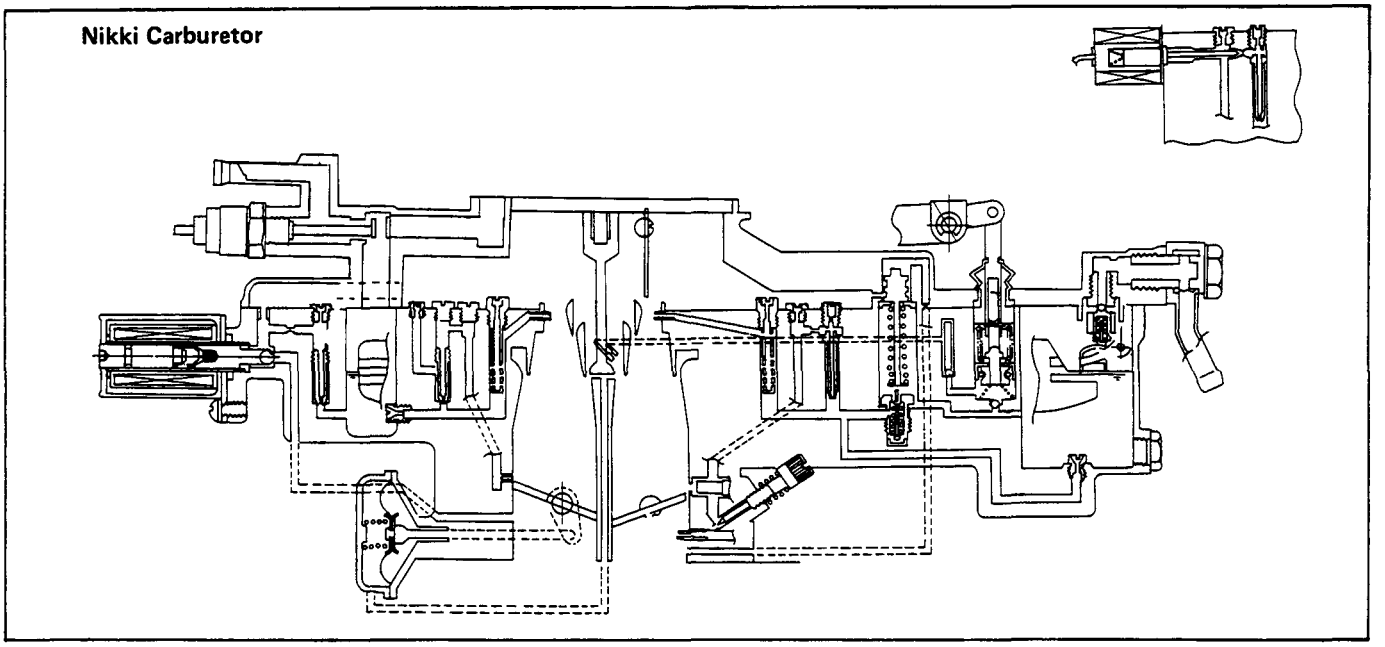

Hitachi Carburetor

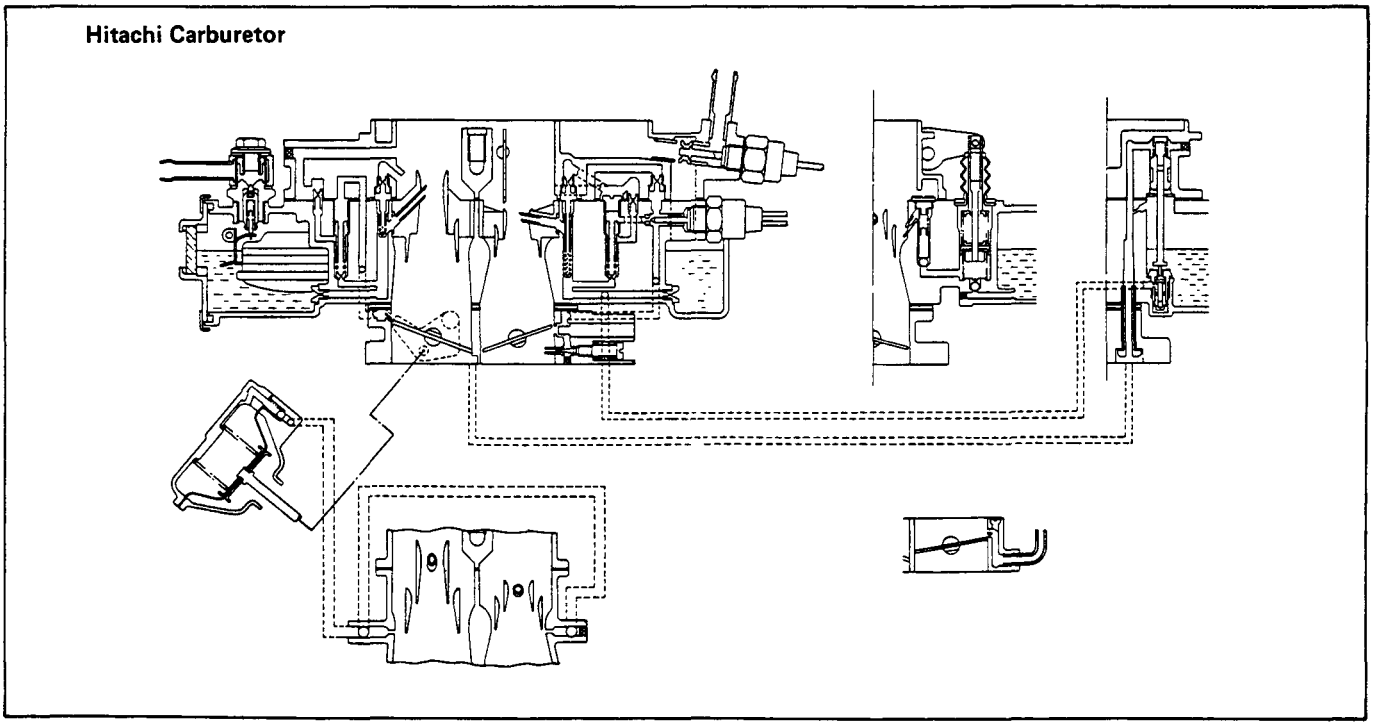

The 4Z Series engine uses a Stromberg 2-barrel, 2-stage carburetor. There are seven circuits.

1. Float chamber circuit
2. Slow speed circuit
3. Main circuit
4. Acceleration circuit
5. Step circuit
6. Power enrichment circuit
7. Choke circuit

The circuits operate either independently or in tandem. The best air-fuel mixture is delivered to the cylinders over a wide range of operating conditions.

FUEL FILTER

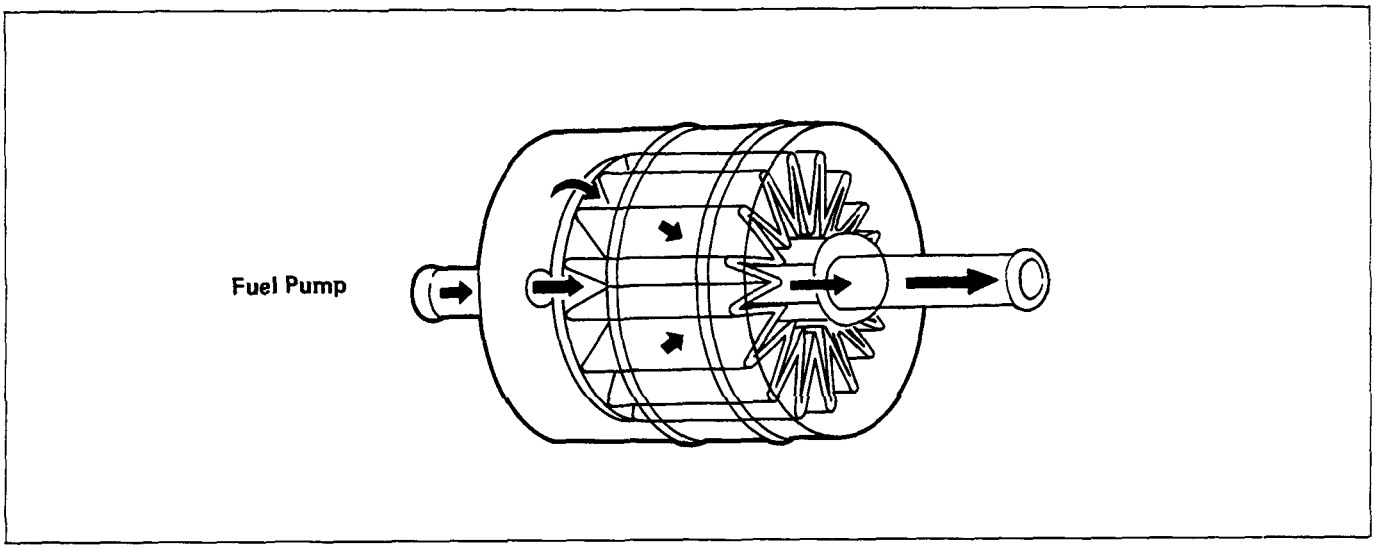

The fuel filter uses a large scale disposable cartridge type element.

FUEL PUMP

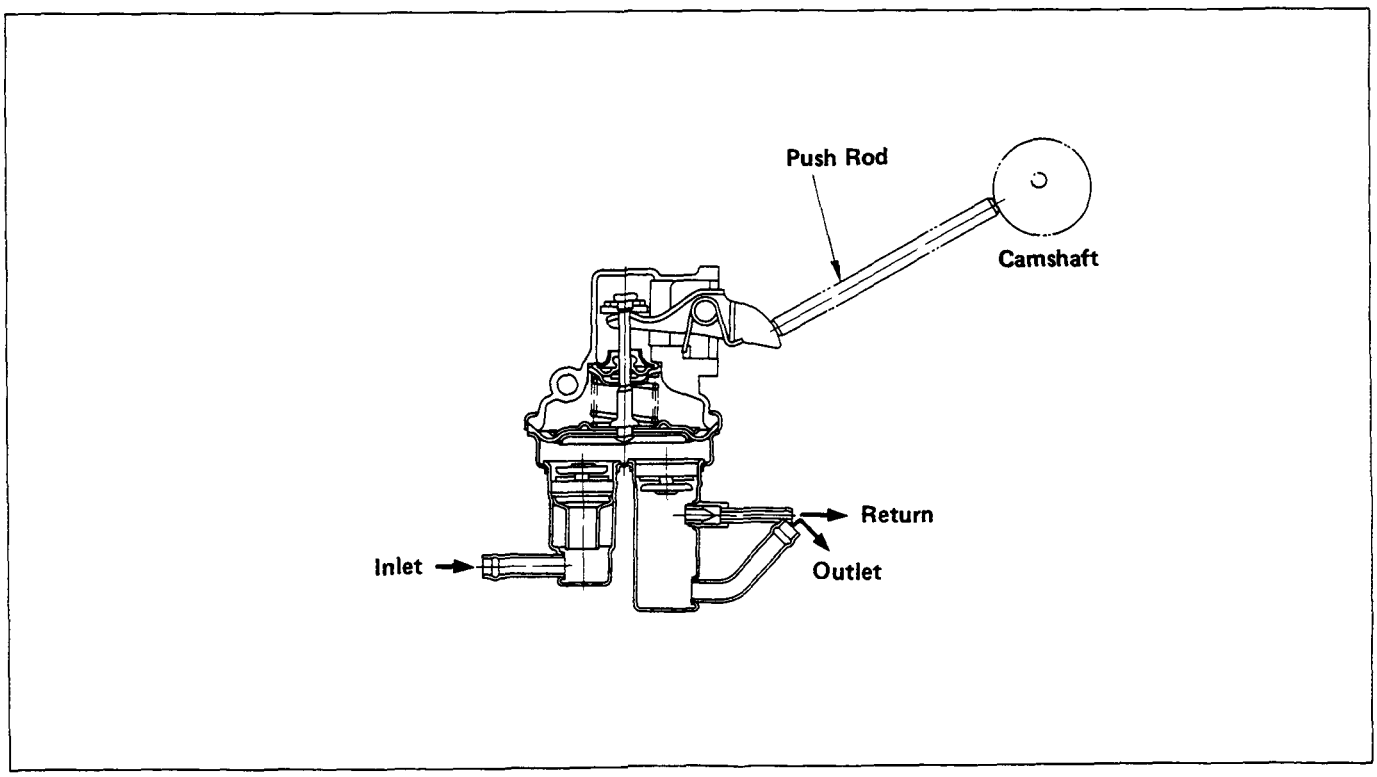

The 4Z Series engine use a mechanical fuel pump.
A push rod from the camshaft eccentric moves the pump lever to operate the pump.

080208

CARBURETOR CONSTRUCTION

08020801

FLOAT CHAMBER

NIKKI CARB.

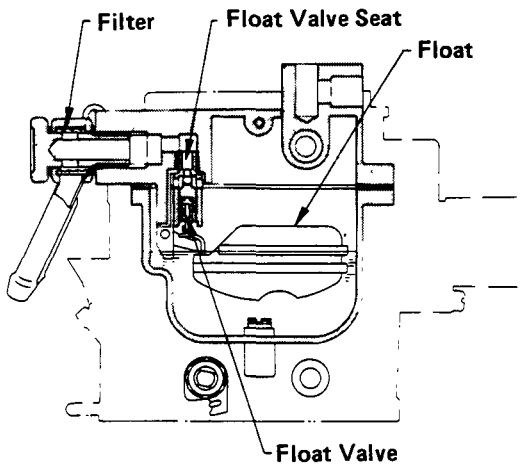

HITACHI CARB.

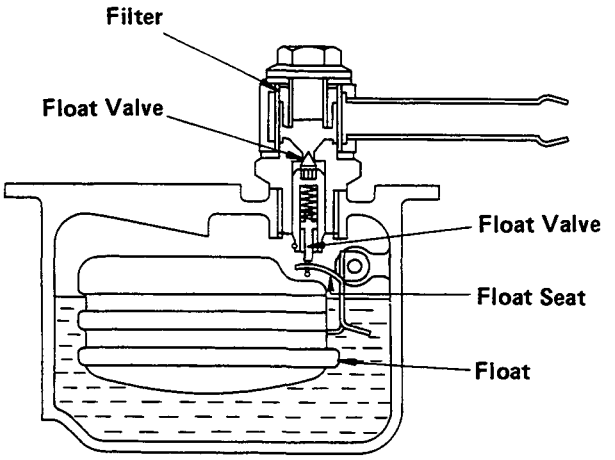

The float chamber maintains the fuel delivered by the fuel pump at a constant level.

08020802

SLOW SPEED CIRCUIT

NIKKI CARB.

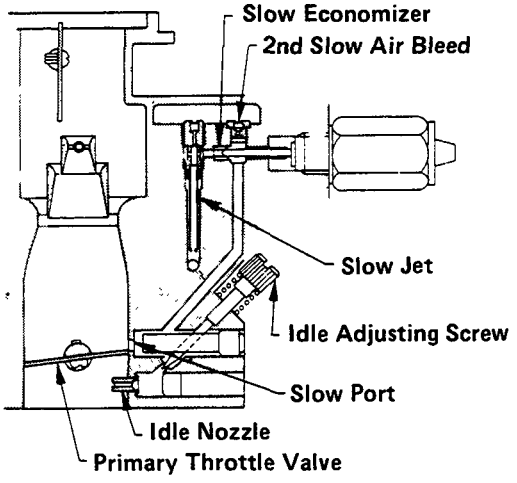

HITACHI CARB.

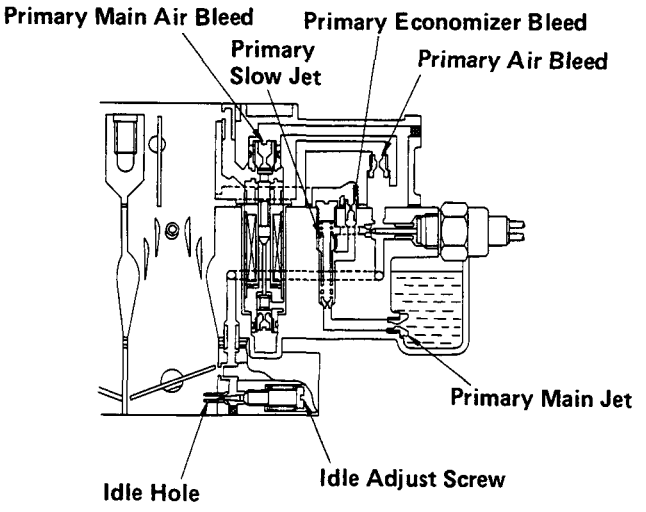

During idling and slow speed operation, the throttle valve is almost completely closed. A minimum amount of air is flowing through the venturi. Negative pressure is very low. The main nozzle tip is above the fuel level in the float chamber. The main nozzle is unable to draw fuel resulting in greater fuel economy at low operating speeds.

08020803
MAIN CIRCUIT

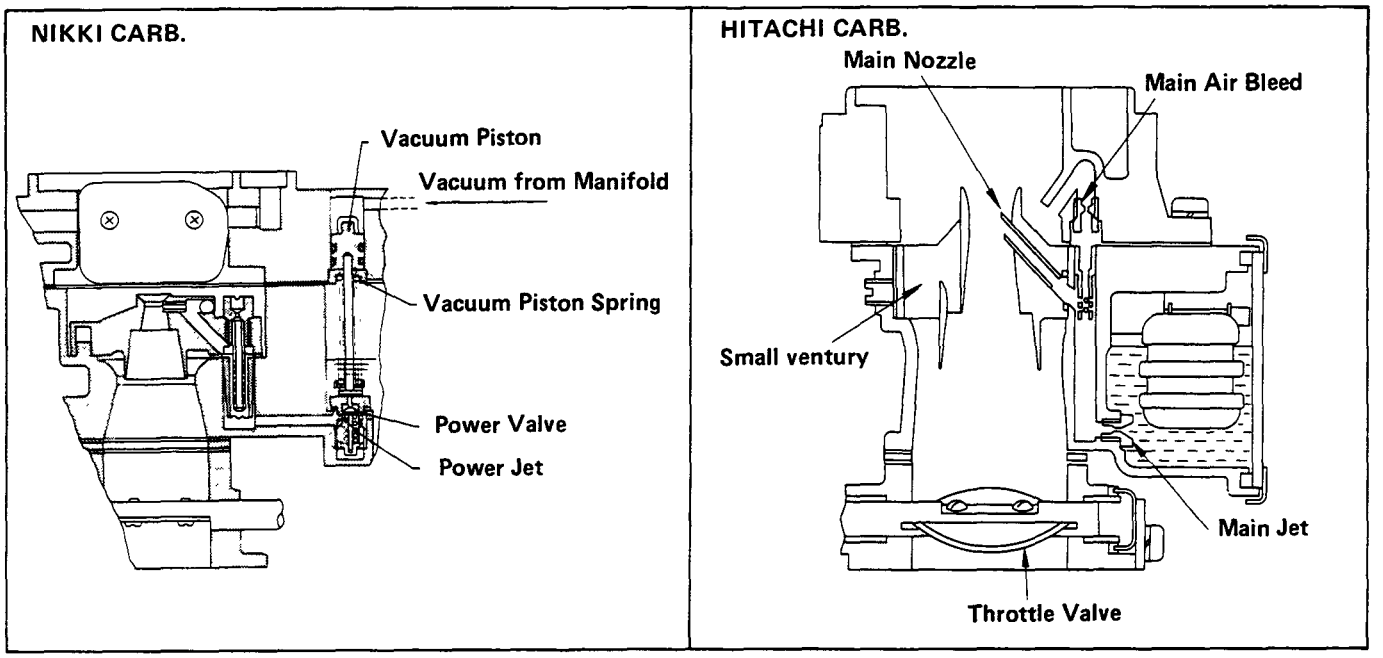

The main circuit is most often used during ordinary vehicle operation.

Opening the throttle valve beyond the specified angle increases the speed and volume of the air passing through the venturi. This results in a greater negative pressure.

The greater negative pressure draws fuel from the float chamber through the main air bleed into the emulsion tube. The emulsion tube mixes the fuel and air.

The air-fuel mixture then passes into the venturi through the main nozzle.

08020804
ACCELERATION CIRCUIT

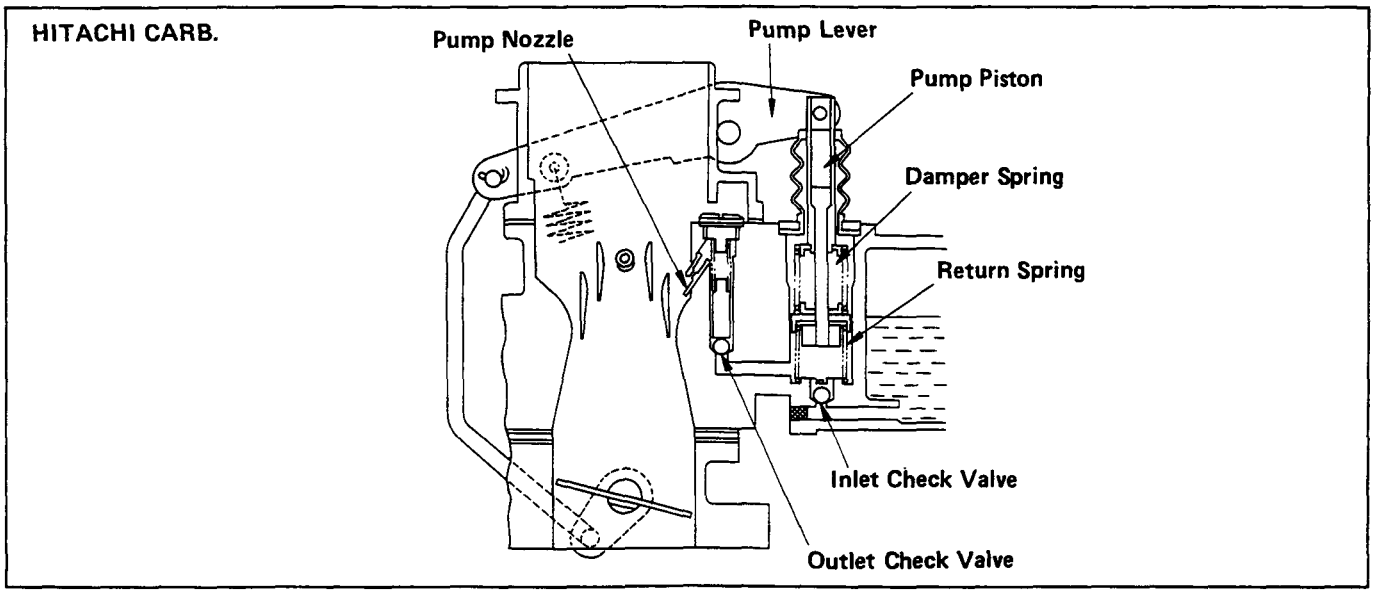

During rapid acceleration, the throttle valve rapidly opens completely to draw in a large volume of air. Because there is insufficient fuel in the air horn, the resulting air-fuel mixture will be too lean. A flat spot will occur.

To prevent this flat spot, the accelerator pump forces fuel into the large venturi to produce a richer air-fuel mixture.

STEP CIRCUIT

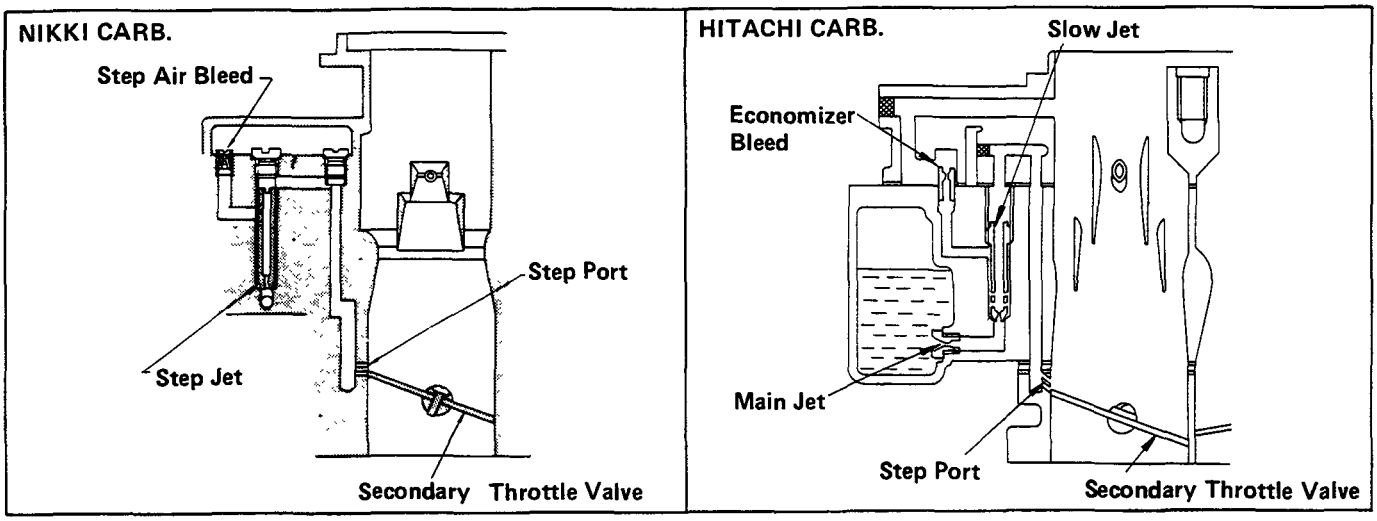

When the carburetor secondary side begins operation, there is an insufficient amount of air passing through the secondary side venturi. The resulting vacuum will not be strong enough to draw the required fuel from the secondary main nozzle. A momentary power loss will occur.

The step circuit acts to supplement the fuel mixture and maintain smooth engine performance.

POWER ENRICHMENT CIRCUIT

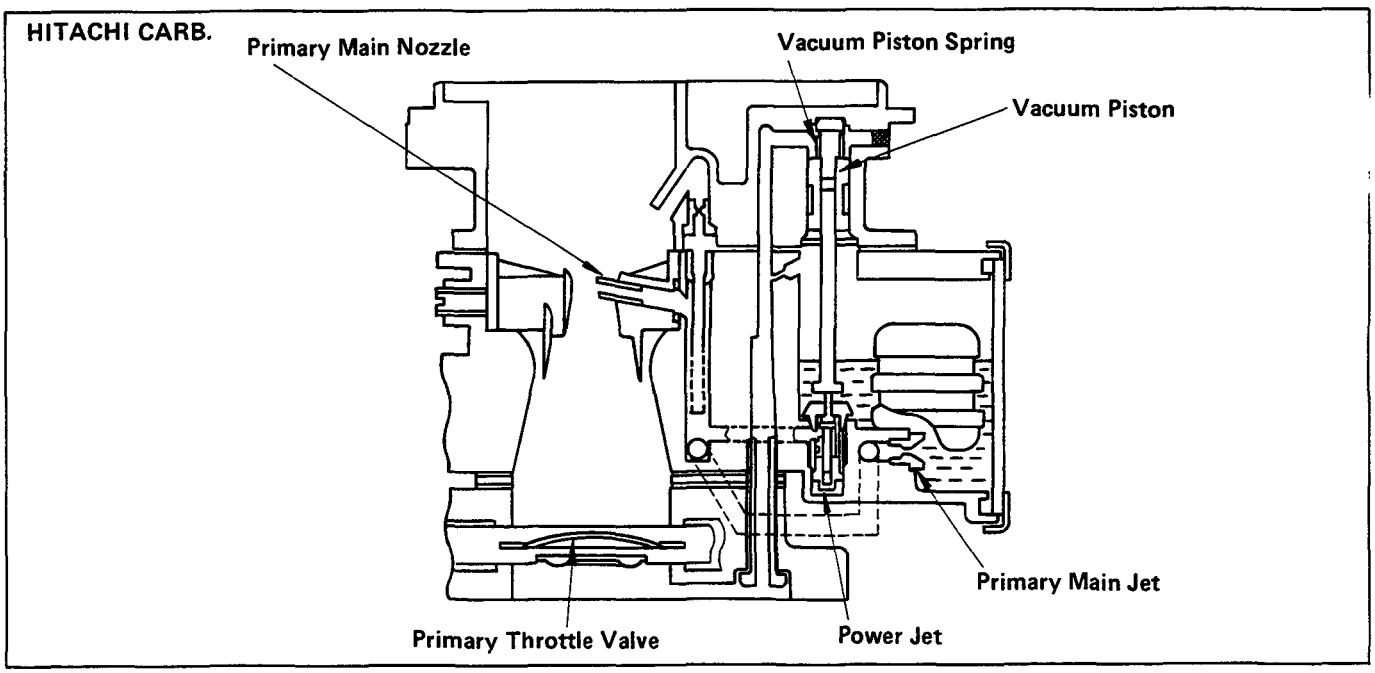

The power enrichment circuit prevents flat spots during rapid acceleration from a low speed.

During light-load running, the throttle valve is only slightly open. This results in a high intake manifold vacuum.

The high manifold vacuum pulls the vacuum piston upward to overcome the force of the vacuum piston spring and hold the power valve closed.

Suddenly opening the throttle valve during rapid acceleration causes the intake manifold vacuum to fall. The vacuum piston spring force is now greater than the force of the intake manifold vacuum. The vacuum piston is pushed down to open the power valve and allow additional fuel to reach the combustion chambers.

08020807

CHOKE CIRCUIT

HITACHI CARB.

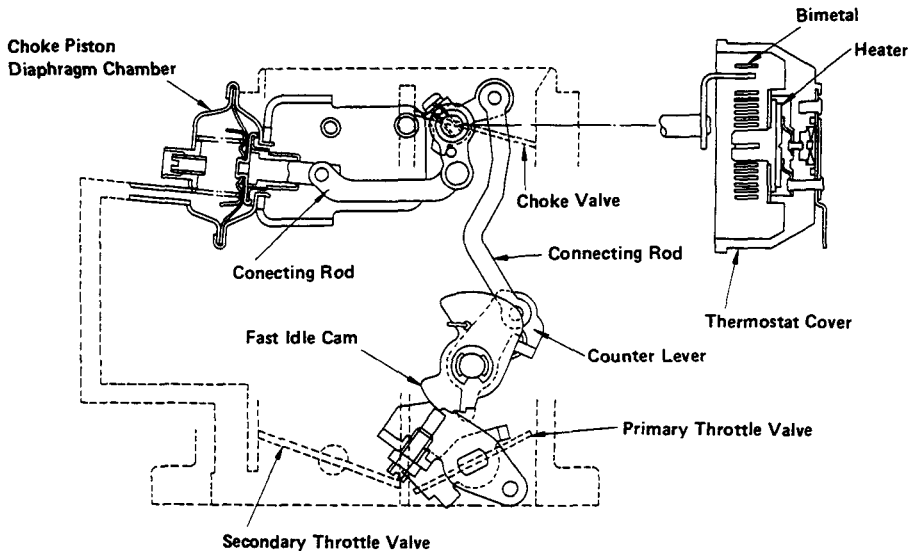

NIKKI CARB.

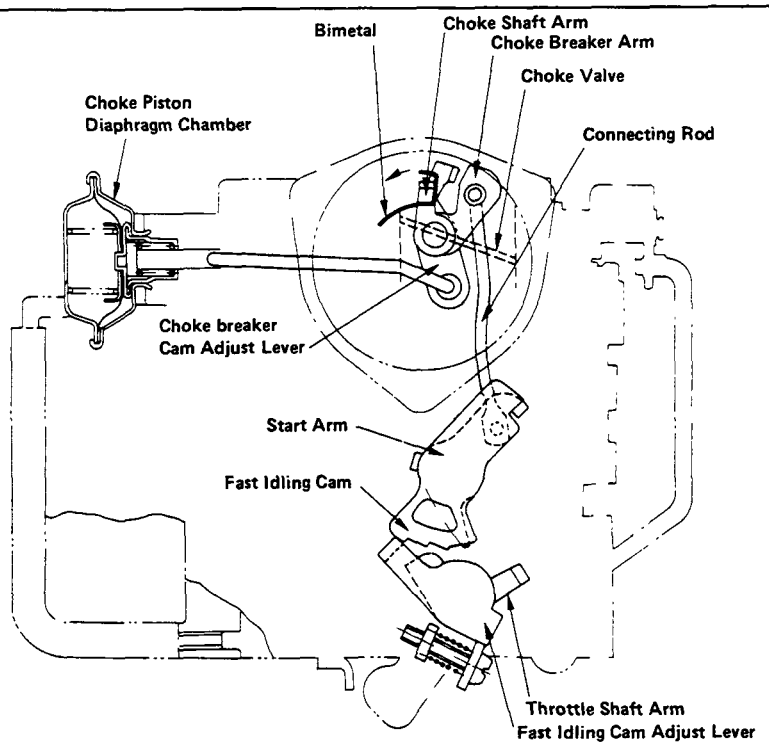

The auto choke consists of the eccentric choke valve, the spiral bimetal, the choke diaphragm, and the control rods.

The bimetal closes the choke valve.

The bimetal tension is inversely proportional to the surrounding temperatures. When the engine is cold, the bimetal tension forces the choke valve and the choke diaphragm closed. As the engine warms up, the bimetal tension drops and the choke valve opens.

The choke valve maintains the proper balance between the intake manifold negative pressure and the air horn air flow at all times. This assures stable engine operation.

CARBURETOR

REMOVAL AND INSTALLATION

Read this Section carefully before performing any removal and installation procedure. This Section gives you important points as well as the order of operation. Be sure that you understand everything in this Section before you begin.

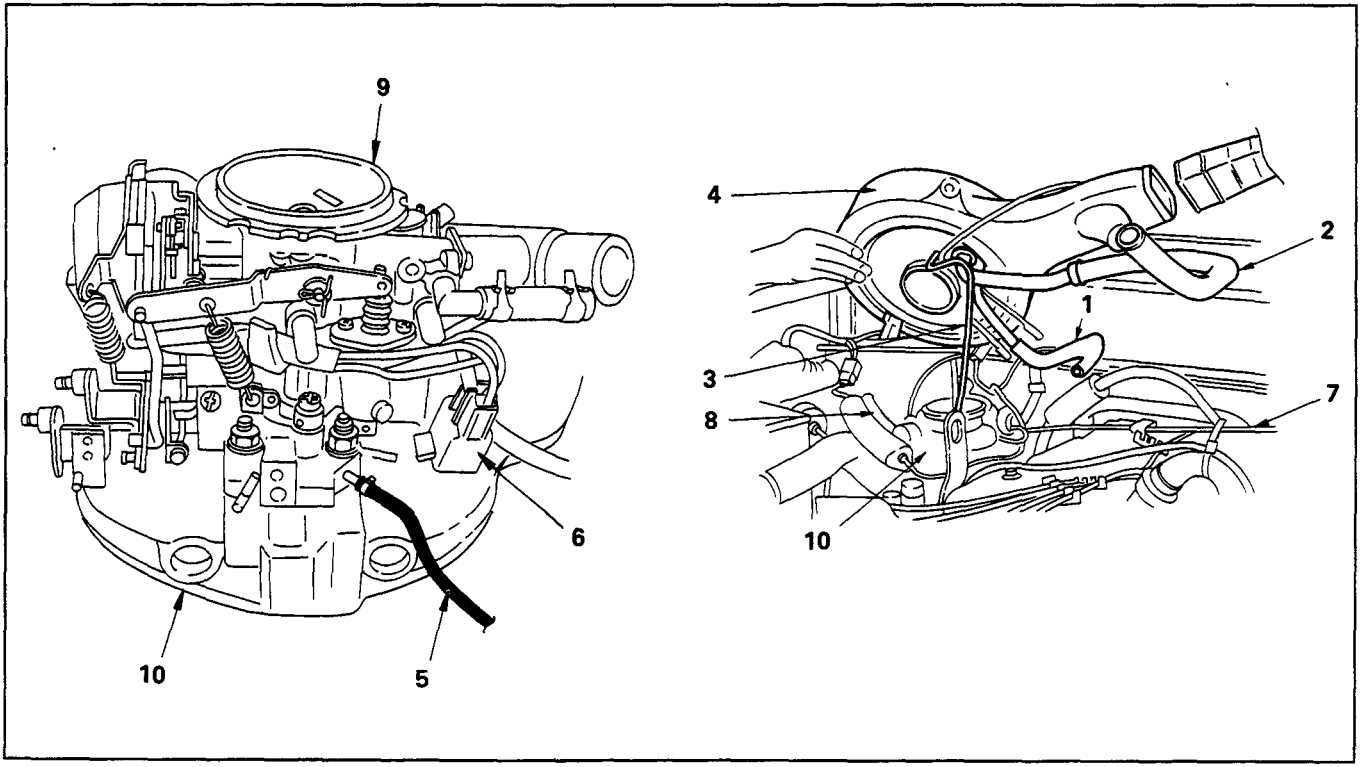

Removal Steps

1. PCV hose
2. Air hose
3. TCA hose
4. Air cleaner
5. ▲ Emission control vacuum hose
6. Lead wire connector
7. Engine control cable
8. Fuel hose
9. ▲ Carburetor
10. Carburetor gasket

Installation Steps

10. ▲ Carburetor gasket
9. ▲ Carburetor
8. Fuel hose
7. ▲ Engine control cable
6. Lead wire connector
5. ▲ Emission control vacuum hose
4. Air cleaner
3. TCA hose
2. Air hose
1. PCV hose

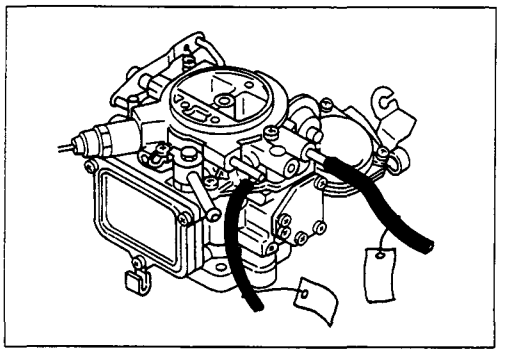

Important Operations – Removal

5. Emission Control Vacuum Hoses

Tag each of the emission control vacuum hoses before disassembly.

This will ensure that the hoses are reconnected correctly.

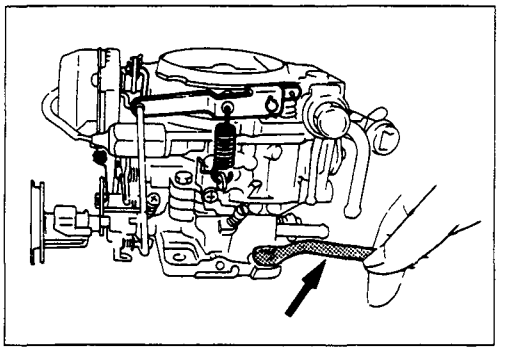

9. Carburetor

Use the carburetor wrench to remove the carburetor.

Carburetor Wrench: 5-8511-9003-0 (J-26510)

Important Operations – Installation

5. Emission Control Vacuum Hoses

Refer to the tags attached at disassembly to reinstall the emission control vacuum hose.

Follow the external parts installation step order.

It is very important that the hose be installed correctly.

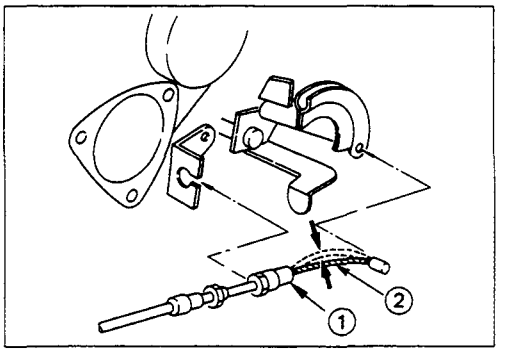

7. Engine Control Cable

1) Fully close the throttle valve.
2) Turn the adjusting nut ① to adjust the engine control inner cable ② play.

Engine Control Inner Cable Play	mm(in)
2 – 3 (0.079 – 0.120)	

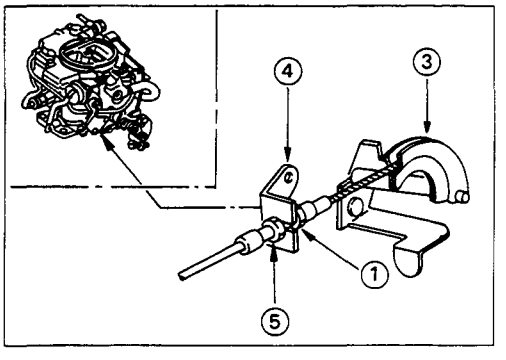

3) Connect the engine control cable to the throttle holder ③.
4) Install the engine control cable to the bracket ④.
5) Tighten the lock nut ⑤.

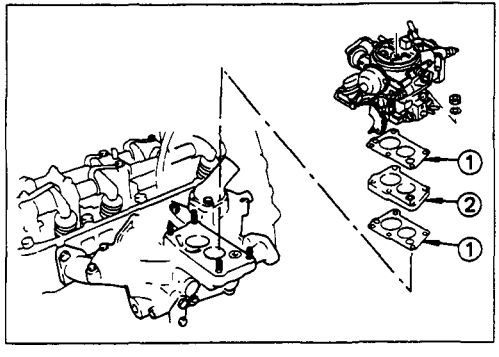

9. Carburetor Gasket

10. Carburetor

1) Install the gasket ①, heat insulator ② (If equipped), and the carburetor to the intake manifold.

2) Use the carburetor wrench to tighten the carburetor nuts to the specified torque.

   Carburetor Wrench: 5-8511-9003-0 (J-26510)

Carburetor Nut Torque	kg·m(lb.ft/N·m)
1.3 ± 0.5 (9.4 ± 3.6/12.7 ± 4.9)	

0803

DISASSEMBLY

(Nippon Kikai-Carburetor)

0803030002A

MAJOR COMPONENTS

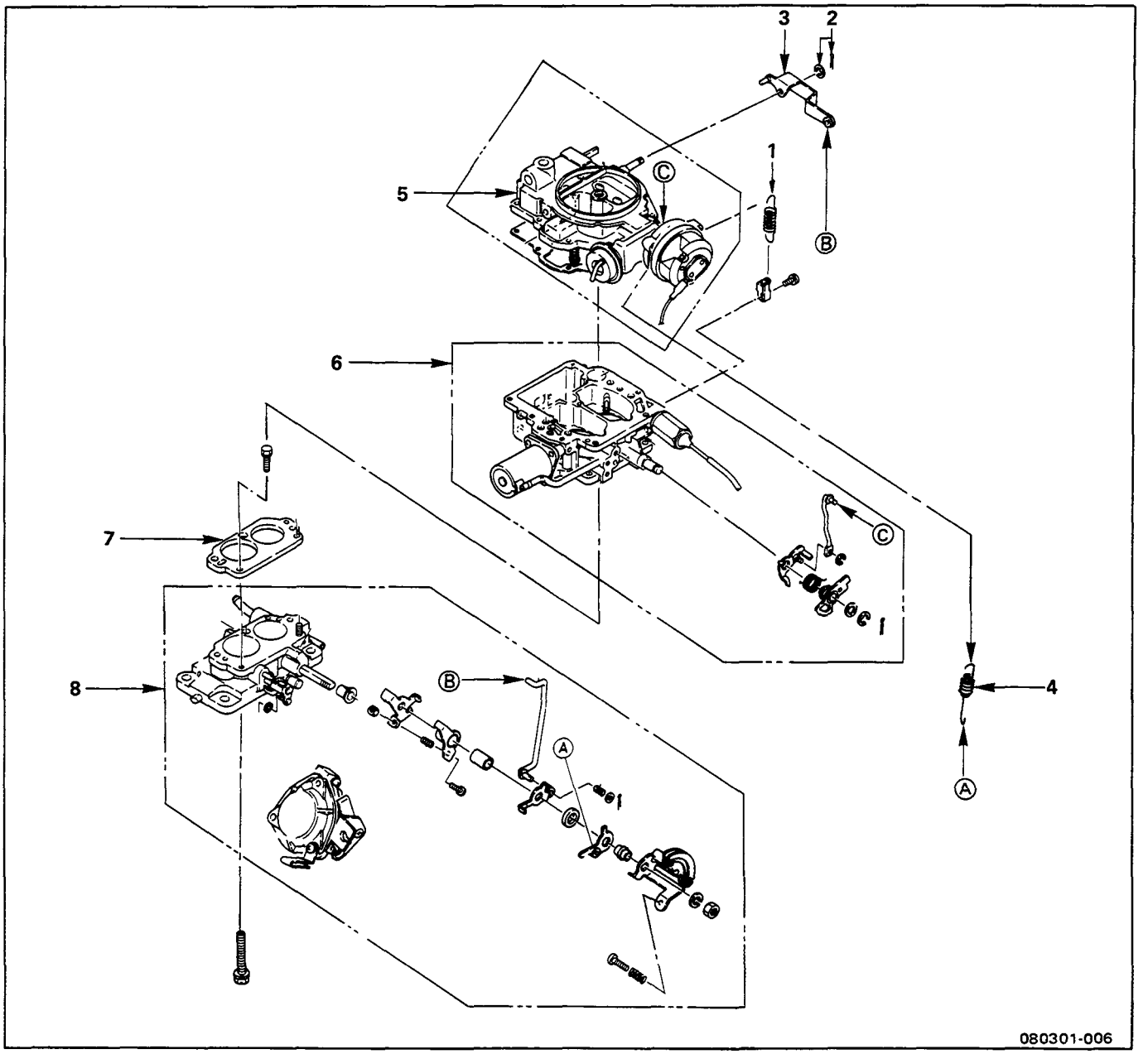

0803030002B

Disassembly Steps

1. Throttle sub-return spring
2. Split pin and retaining ring
3. Accelerator pump arm
4. Primary to secondary spring
▲ 5. Air horn
▲ 6. Carburetor body
7. Carburetor insulator
▲ 8. Flange

08030101

Important Operations

0803010103

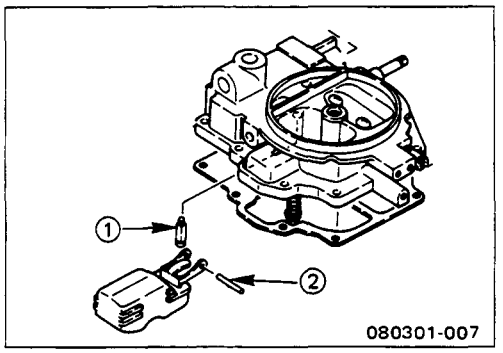

5. Air Horn

Do not allow the float valve seat ① and the float pin ② to fall free when separating the air horn from the carburetor flange.

These parts are very small and are easily lost. Handle them with care.

0803010104A

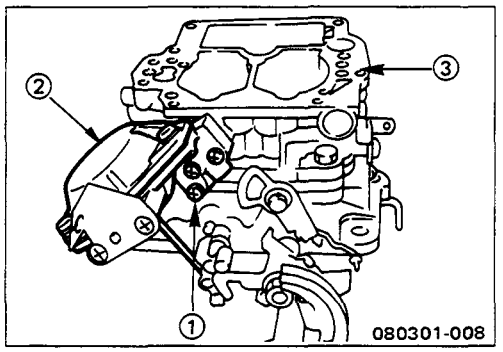

6. Carburetor Body

8. Flange

1) Loosen the three screws ①.
2) Remove the 2nd diaphragm chamber ② from the carburetor body ③.

0803010104B

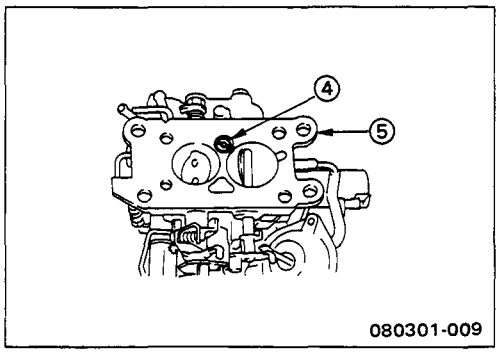

3) Loosen the flange set screw ④ at the lower part of the flange ⑤.

Note:

The hollow flange set screw also serves as the power valve negative pressure intake. Take care not to damage the screw and intake during the disassembly procedure.

0803010104C

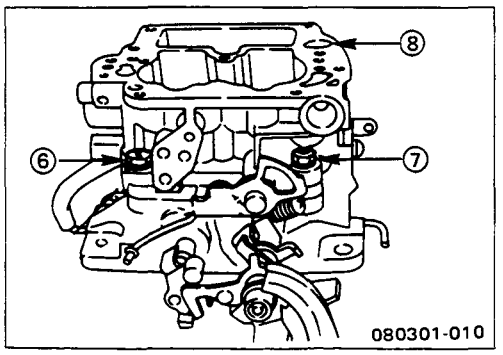

4) Loosen the bolt ⑥ and the nut ⑦ on the carburetor body ⑧.

0803030003

MINOR COMPONENTS

080303000301A

AIR HORN

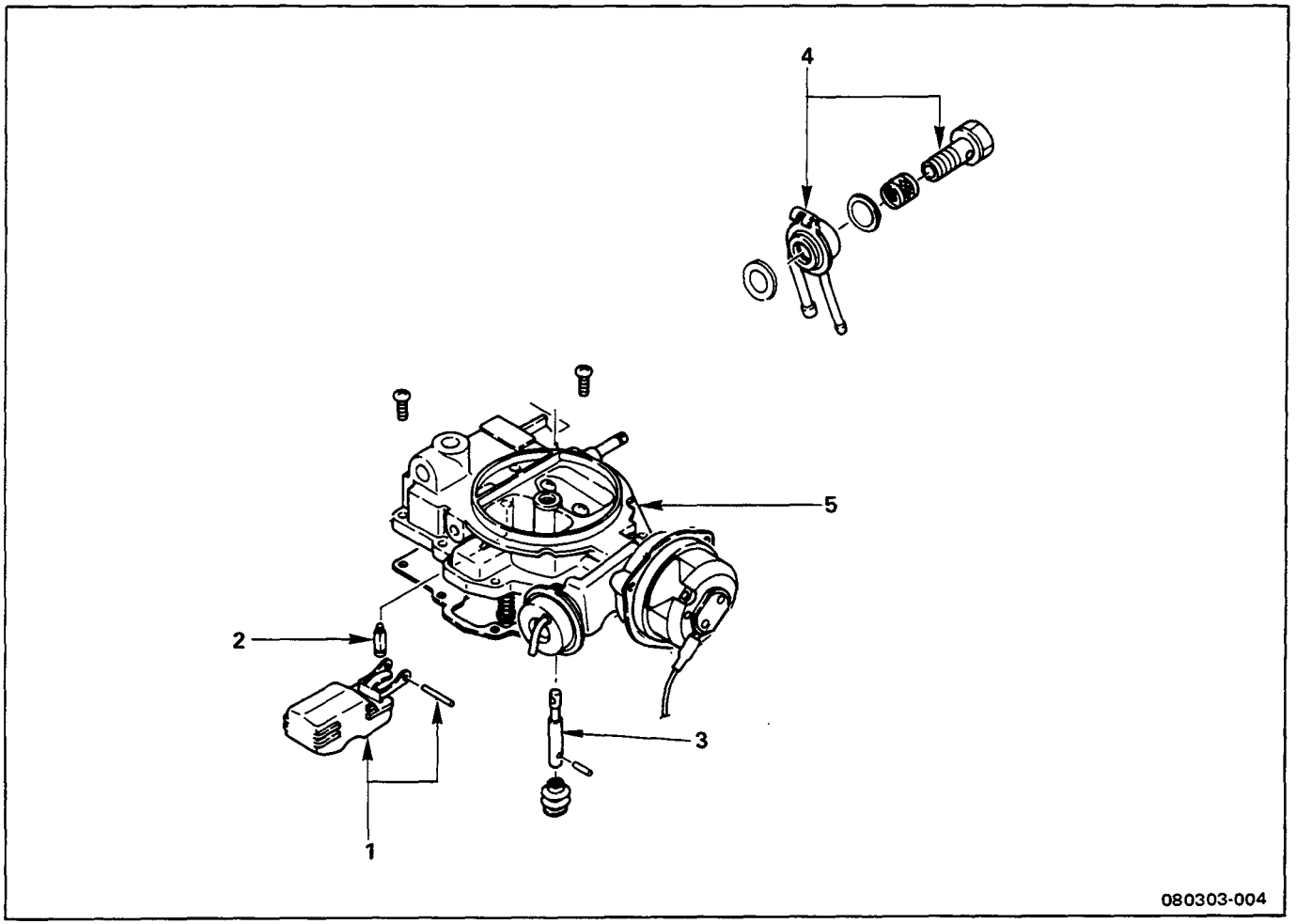

080303000301B

Disassembly Steps

1. Float pin and float
2. Float valve
3. Accelerator plunger
4. Fuel connector
5. Air horn body with coil housing and choke piston

080303000302A

CARBURETOR BODY

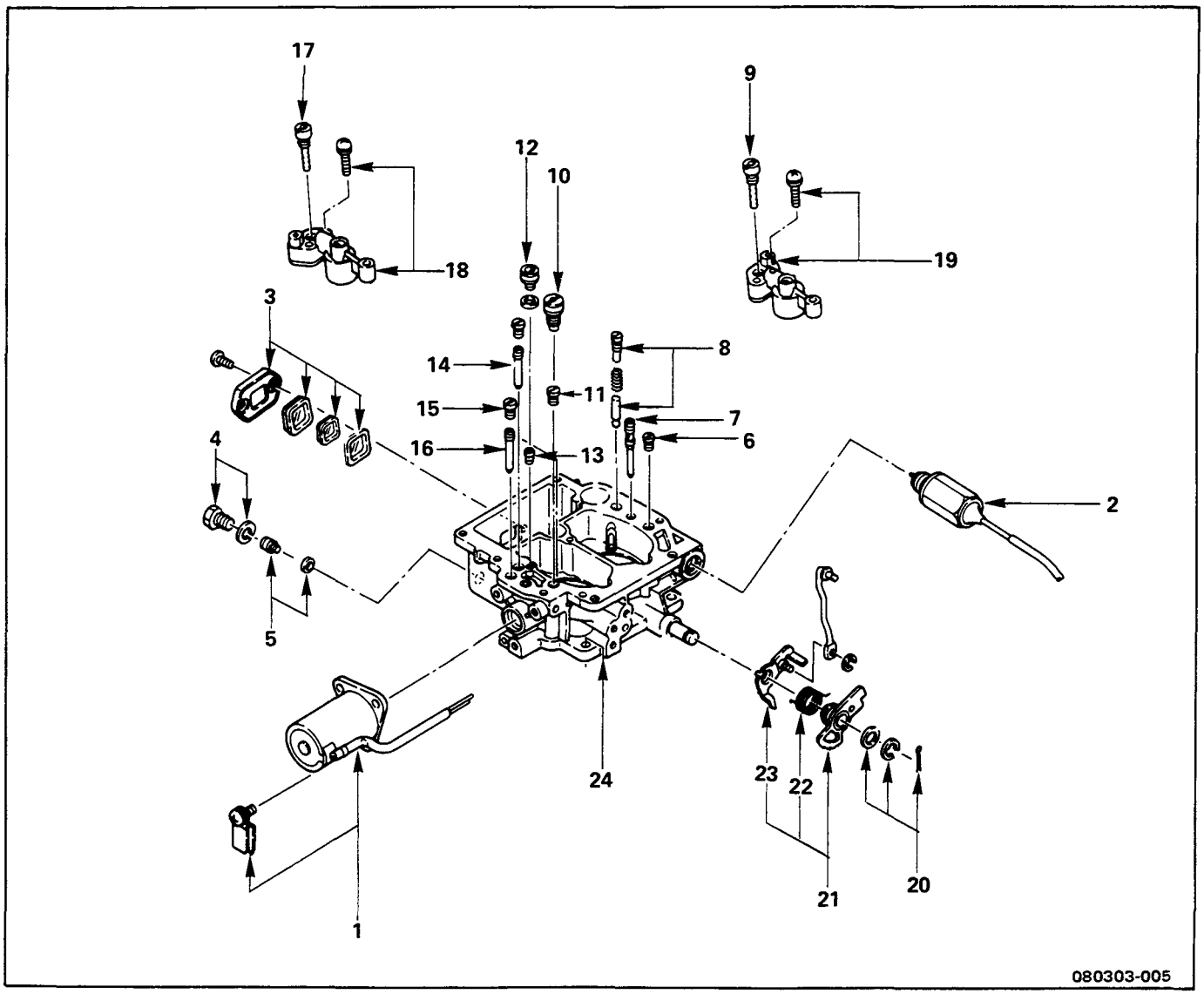

080303000302B

Disassembly Steps

1. Coasting solenoid
2. Solenoid valve
3. Fuel level gauge cover and glass
4. Main passage plug
5. 2nd main jet
6. Slow air bleed jet
7. Slow jet
8. Carburetor pump spring and check valve seat
9. 1st main air bleed jet
10. Power jet
11. Slow passage plug
12. 1st main jet
13. Step air bleed jet
14. Step jet
15. 1st idle air bleed jet
16. Coasting jet
17. 2nd main air bleed jet
18. ▲ 2nd small venturi
19. ▲ 1st small venturi
20. Split pin and clip
21. Fast idling cam
22. Fast idling cam spring
23. Starting arm
24. Carburetor body

08030102

Important Operations

0803010201

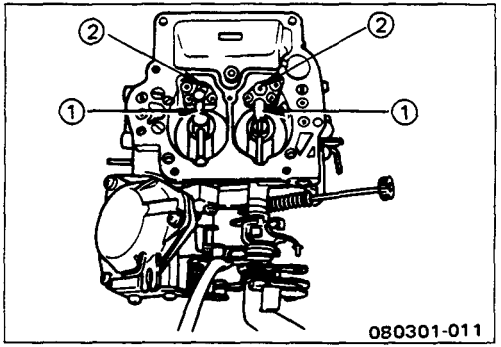

18. 2nd Small Venturi

19. 1st Small Venturi

Remove the small venturis ① after removing the 2nd and 1st main air bleed jets ②.

080302

INSPECTION AND REPAIR (NIKKI)

Make the necessary adjustments, repairs, and part replacements if excessive wear or damage is discovered during inspection.

08030204

Cleaning

1. Carefully clean all of the disassembled parts (excluding the O-rings, the packing, the gaskets, and the electrical parts) with carburetor cleaner.

   The parts are very delicate. Handle them with care.

2. Use dry air to blow each of the carburetor passages free of foreign material.

08030205

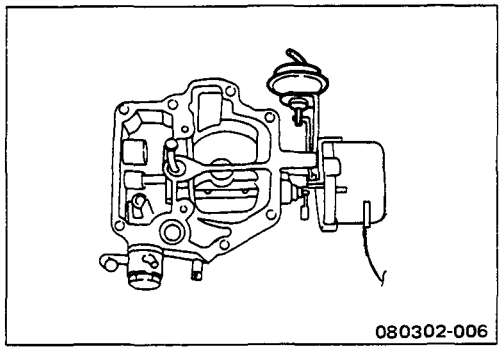

080302-006

Air Horn, Carburetor Body, and Flange

1. Inspect the air horn, carburetor body, and flange fitting surfaces for cracks and other flaws.

   If there are cracks or other flaws, the parts must be replaced.

2. Inspect the shafts, the links, and the bushings for deformation and excessive wear.

   If there is deformation or excessive wear, the parts must be replaced.

08030206

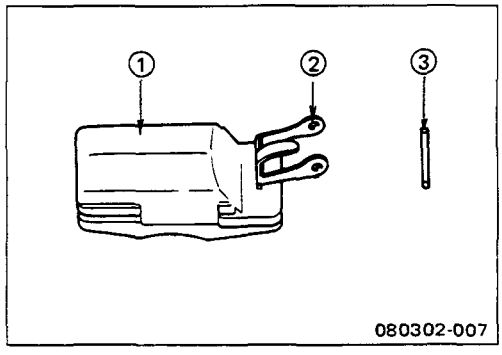

080302-007

Float and Float Valve

1. Immerse the float in gasoline to clean it.
2. Check the following parts for excessive wear and other damage.
   - ① Float
   - ② Float pin hole
   - ③ Float pin

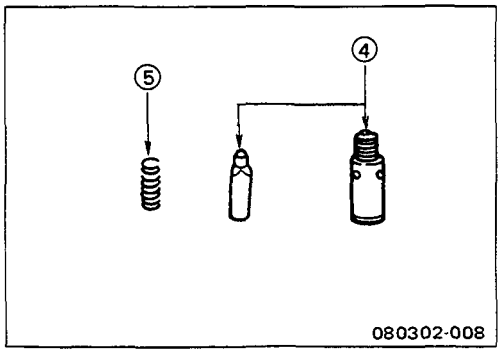

080302-008

- ④ Float valve seat and strainer
- ⑤ Spring (Resilience)

080303000303A

FLANGE

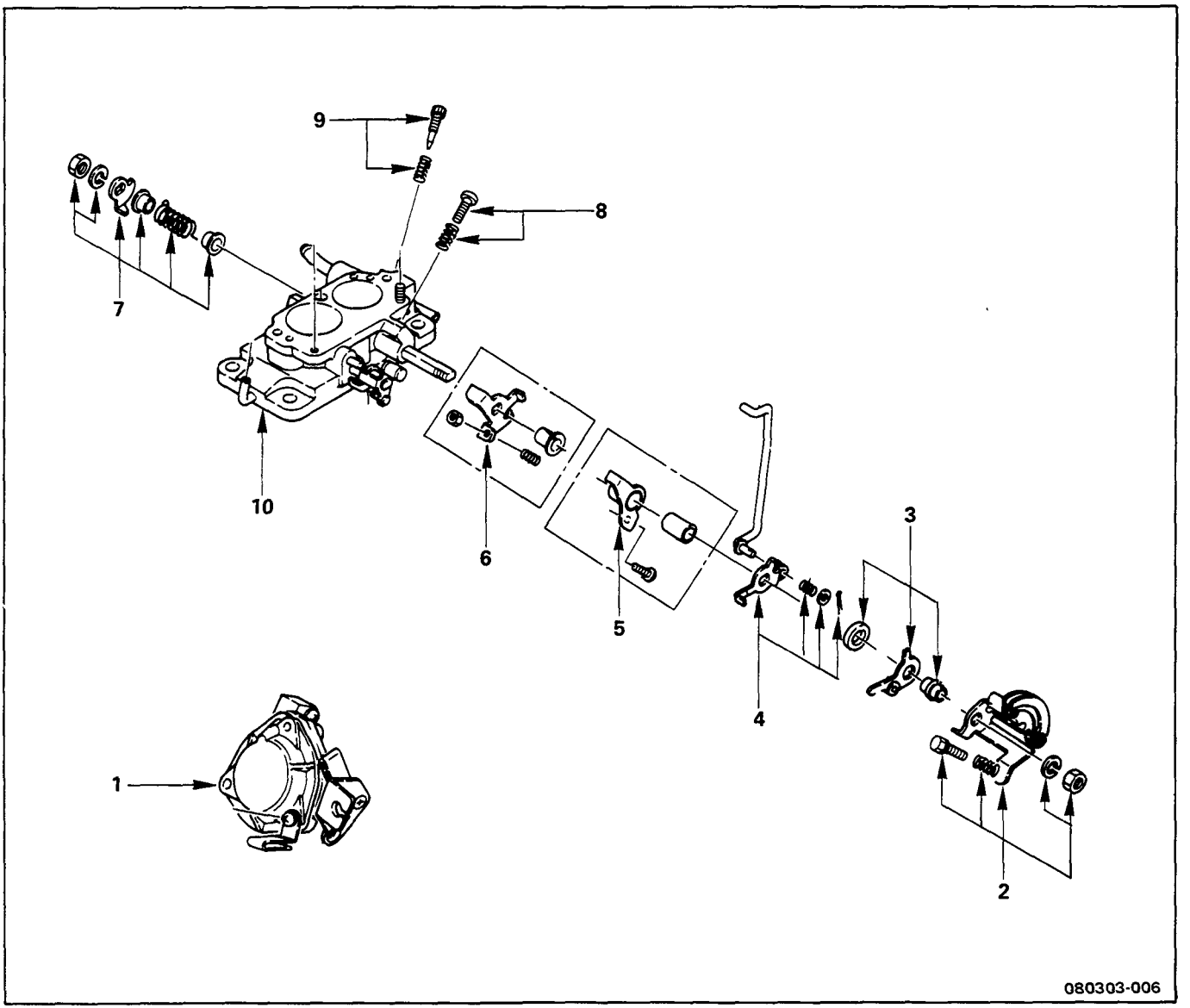

080303000303B

Disassembly Steps

1. 2nd diaphragm chamber
2. Throttle lever
3. Primary to secondary arm
4. Pump connector arm
5. Fast idling cam adjusting arm
6. Throttle shaft arm
7. Throttle return spring arm
8. Throttle adjusting screw
9. Idling adjusting screw
10. Flange

08030207

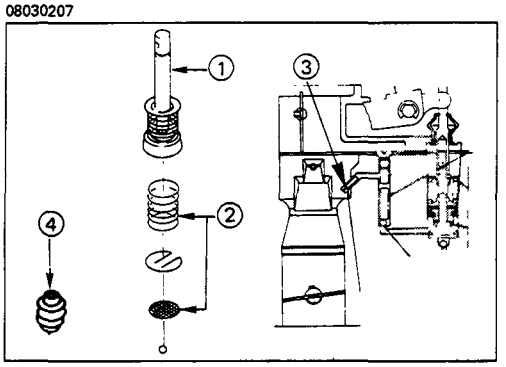

Accelerator Pump Plunger

Check the following accelerator pump plunger parts for excessive wear and other damage.

① Plunger
② Springs and strainer
③ Pump nozzle
④ Plunger boots

08030208

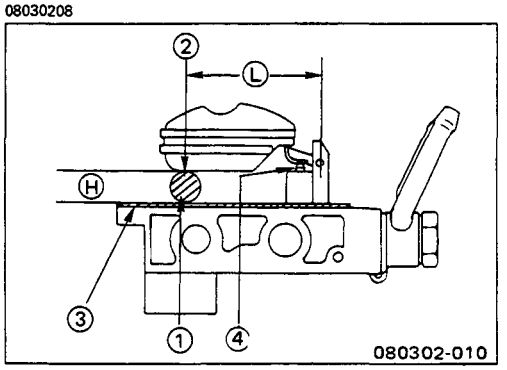

Float Level Adjustment

Place the test bar ① between the float tip ② and the air horn gasket ③ as shown in the illustration.

The test bar should just fit into the space Ⓗ between the float and the air horn gasket.

If the float level height is outside the specified range, adjust it by carefully bending the float arm ④ with your hands.

Float Arm Height Ⓗ	mm(in)
8.5 – 9.5 (0.33 – 0.37)	

Float Pin Center to Float Tip Ⓛ (Reference)	mm(in)
57 (2.24)	

08030210

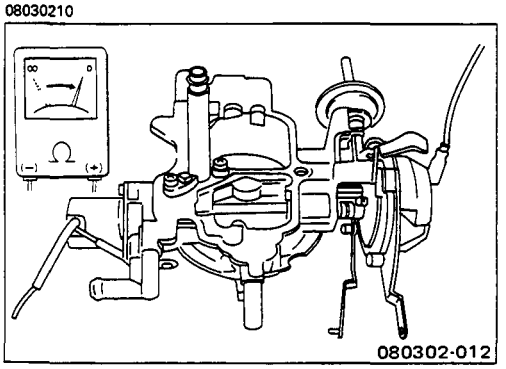

Auto Choke Coil Housing

Use an ohmmeter to measure the resistance between the choke coil wire and the coil housing.

If the measured value is outside the specified value, the coil housing must be replaced.

Auto Choke Coil Housing Resistance	Ohms
6 ± 5 at 25°C (77°F)	

08030211, 0803021101

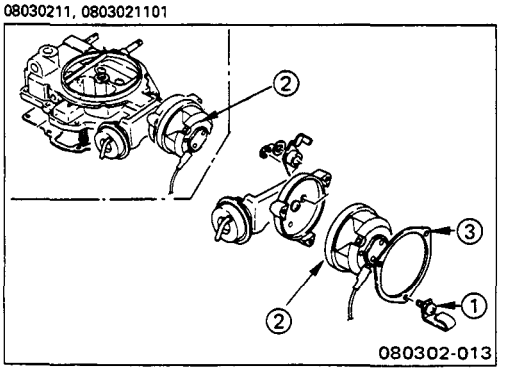

Auto Choke Coil Housing Replacement

Coil Housing Removal

1. Loosen the three coil housing installation screws ①.
2. Remove the coil housing ② together with the bimetal set case plate ③.

Note:

Do not remove the auto choke coil housing unless it is to be replaced.

0803021102A

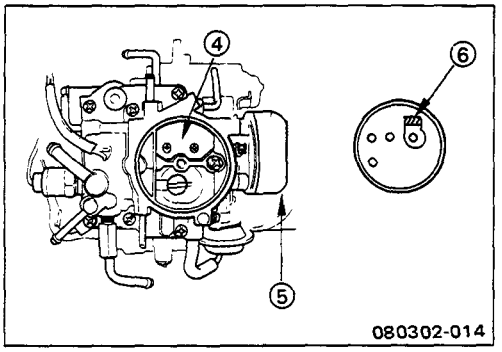

Coil Housing Installation

1. Fully close the choke valve ④.
2. Set the coil housing plate ⑤ choke shaft arm catch ⑥ perfectly horizontal.

0803021102B

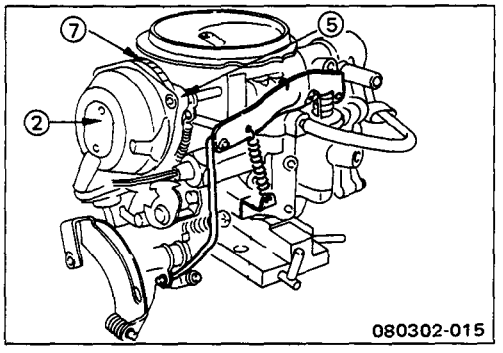

3. Set the bimetal with coil housing ② to the choke shaft arm.

   Refer to the illustration.
4. Align the setting marks ⑦ on the coil housing plate ⑤ and the coil housing ②.
5. Install the coil housing together with the bimetal set case plate.

08030212

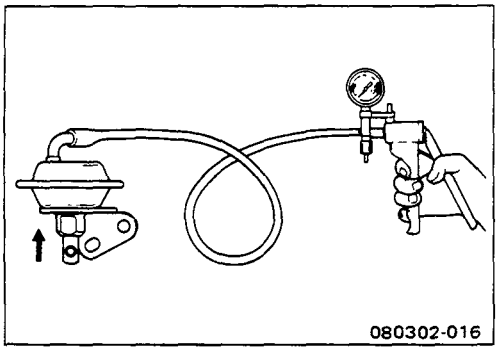

Choke Piston

Apply a vacuum to the choke piston diaphragm.

The diaphragm should hold the vacuum for several seconds.

If it does not, the choke piston diaphragm must be replaced.

08030213, 0803021301A

Choke Piston Replacement

Choke Piston Removal

1. Remove the coil housing.
2. Remove the coil housing plate.
3. Disconnect the choke piston rod clip from the choke shaft.

Note:

Do not remove the choke piston unless it is to be replaced.

0803021301B

Choke Piston Installation

Follow the removal procedure in the reverse order to install the choke piston.

08030214

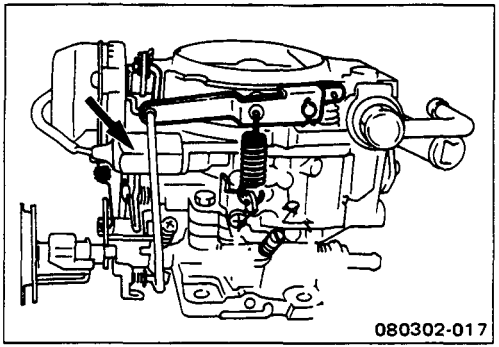

08030215

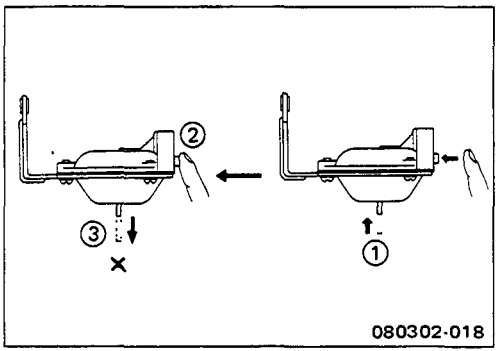

Slow Cut Solenoid Valve

1. Check the slow cut solenoid valve body and spring spool for excessive wear and other damage.
2. Install the solenoid valve to the carburetor body.
3. Apply 12 Volts to the solenoid valve.

   Check that the valve operates smoothly.

   If the valve does not operate smoothly, it must be replaced.

2nd Diaphragm Chamber

1. Use your hand to push in the diaphragm chamber rod ①.

   Block the diaphragm chamber hole ② with a finger at the same time.
2. Remove your finger from the hole.

   The rod should not move.

   If the rod moves, the diaphragm is damaged and must be replaced.

0804

REASSEMBLY

080401A

MINOR COMPONENTS

FLANGE

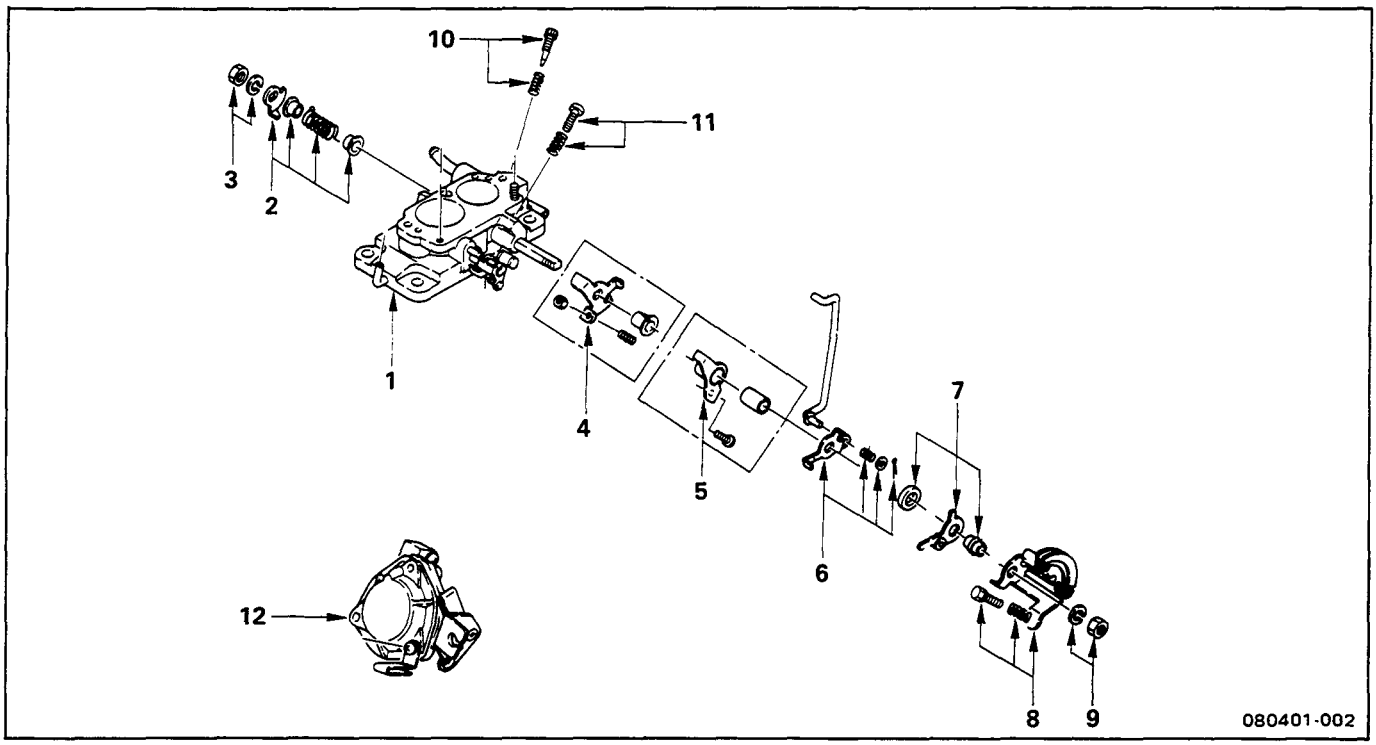

080401B

Reassembly Steps

1. Flange
2. ▲ Spring arm nut
3. Throttle return spring arm
4. Throttle shaft arm
5. Fast idling cam adjusting arm
6. Pump connector arm
7. Primary to secondary arm
8. Throttle lever
9. ▲ Throttle lever nut
10. Idling adjusting screw
11. Throttle adjusting screw
12. 2nd diaphragm chamber

Important Operations

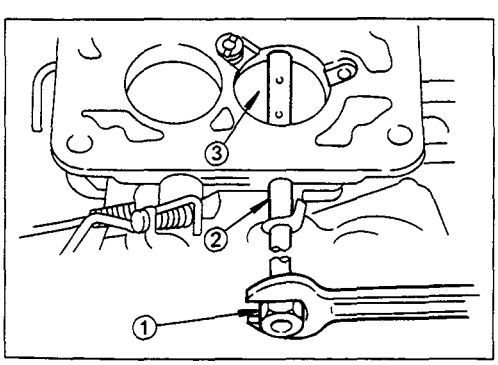

2. Spring Arm Nut

9. Throttle Lever Nut

1) Install the throttle lever nut ① to the throttle valve shaft ②.
2) Tighten the throttle lever nut to the related parts.
   Prevent the throttle valve shaft ② from turning.

Note:

Failure to hold the throttle valve shaft stationary while tightening the throttle valve nut will result in damage to the throttle valve ③.

080402A

CARBURETOR BODY

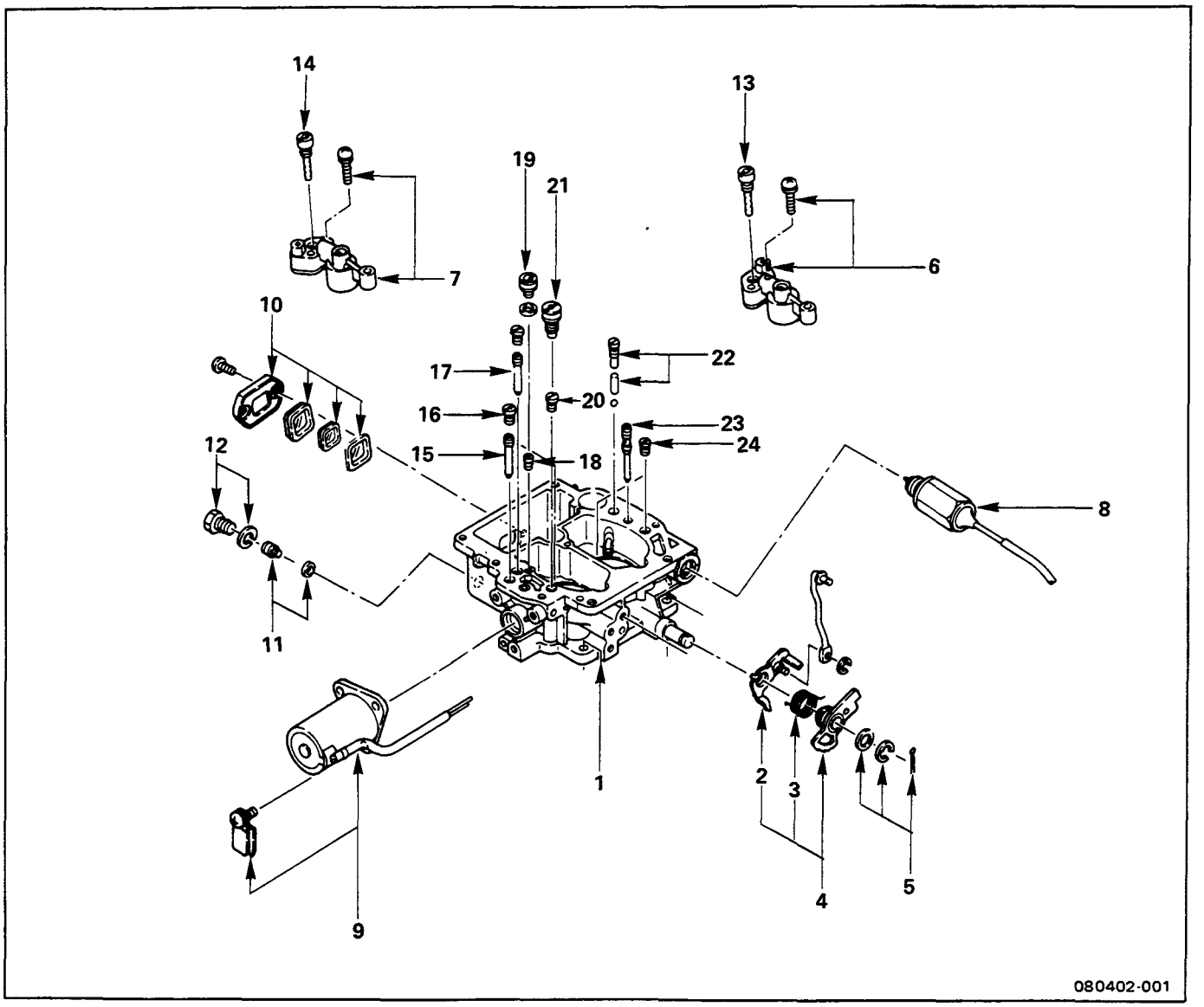

080402B

Reassembly Steps

1. Carburetor body
2. Starting arm
3. Fast idling cam spring
4. Fast idling cam
5. Split pin and clip
6. 1st small venturi
7. 2nd small venturi
8. Solenoid valve
9. Coasting solenoid
10. Fuel level gauge cover and glass
11. 2nd main jet
12. Main passage plug
13. 1st main air bleed jet
14. 2nd main air bleed jet
15. Coasting jet
16. 1st idle air bleed jet
17. Step jet
18. Step air bleed jet
19. 1st main jet
20. Slow passage plug
21. Power jet
22. Carburetor pump spring and check valve
23. Slow jet
24. Slow air bleed jet

080403A

AIR HORN

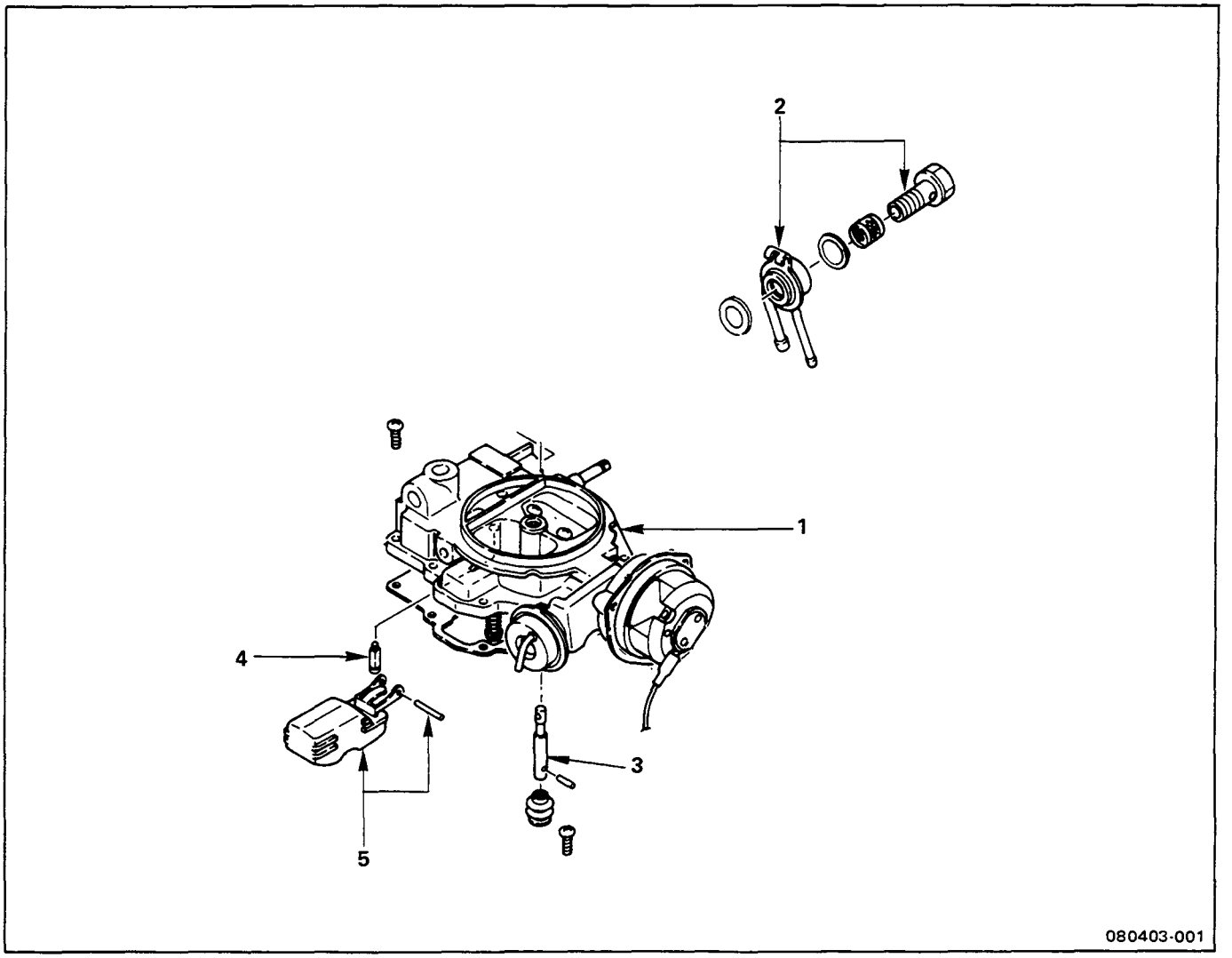

080402B

Reassembly Steps

1. Air horn body with coil housing and choke piston
2. Fuel connector
3. Accelerator plunger
4. Float valve
5. Float pin and float

080404A

MAJOR COMPONENTS

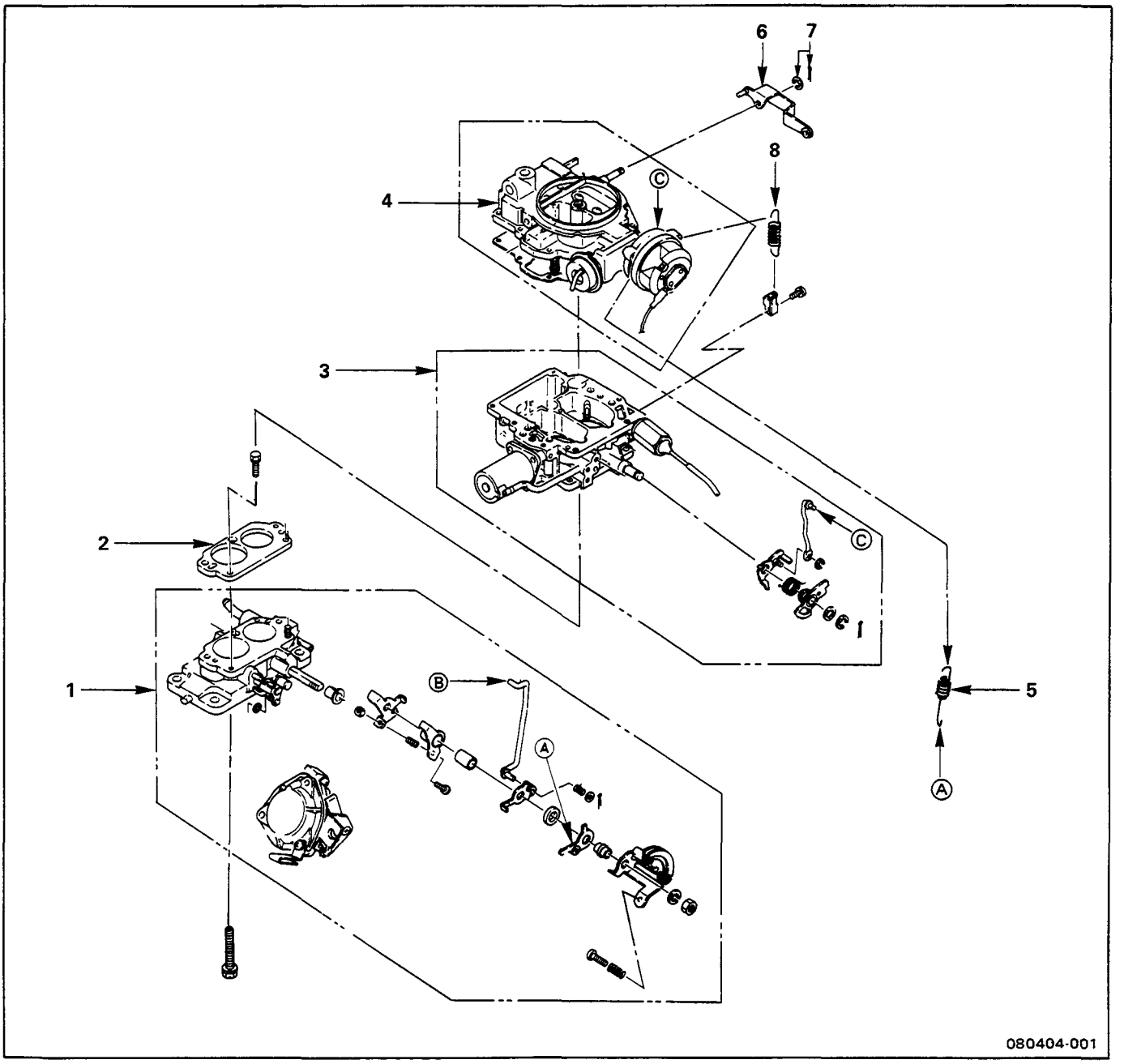

080402B

Reassembly Steps

1. Flange
2. Carburetor insulator
3. Carburetor body
4. Air horn
5. Primary to secondary spring
6. Accelerator pump arm
7. Split pin and retaining ring
8. Throttle sub-return spring

08040401, 0804040101

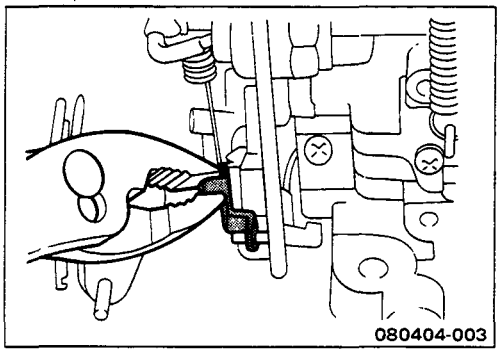

CARBURETOR ADJUSTMENT

Secondary Throttle Valve Touch Angle

Inspect the primary throttle valve full opening when the secondary throttle valve is starting to open.

Use the throttle valve angle set gauge to check the primary throttle valve angle.

Valve Angle Set Gauge: 5-8840-2133-0

The throttle valve angle must match the gauge angle.

If the throttle valve angle does not match the gauge angle, adjust it by carefully bending the connecting pump arm.

0804040102

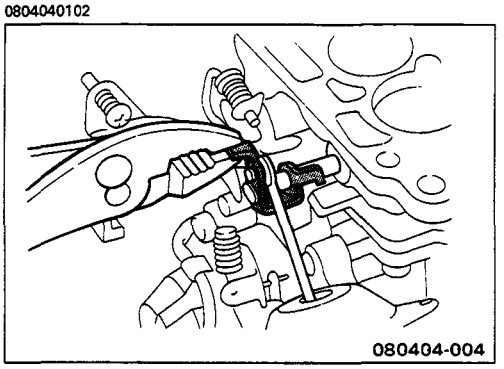

Kick-Up Angle

Check that the secondary valve opens just slightly (0° – 2°) when the primary valve is fully open.

If the secondary valve opens too little or too much, adjust it by carefully bending the connecting pump arm.

0804040103

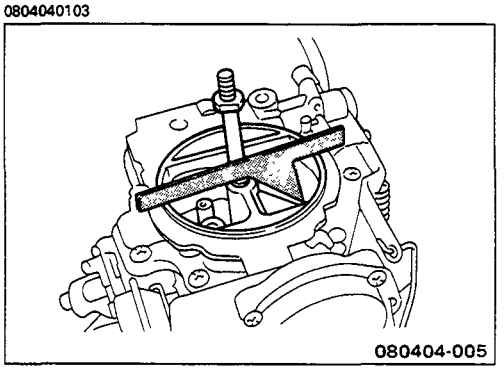

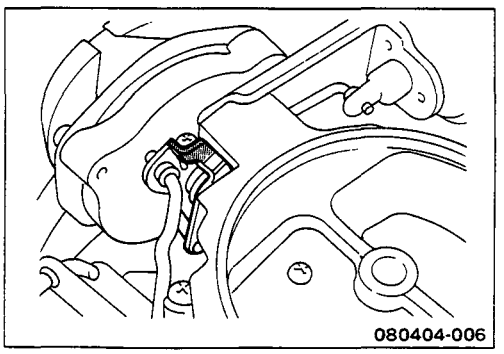

Choke Valve Angle

1. Fully open the primary throttle valve.
2. Use the choke valve angle set gauge to check the choke valve angle.

Choke Valve Angle Set Gauge: 5-8840-2132-0

The choke valve angle must match the gauge angle.

If the choke valve angle does not match the gauge angle, adjust it by carefully bending the choke valve adjusting lever.

08040104

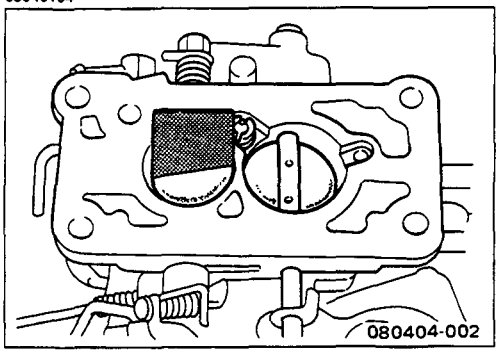

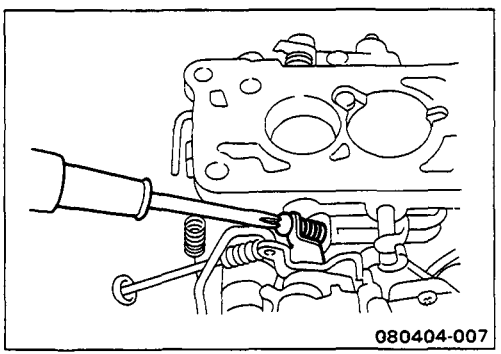

Fast Idling Setting

1. Set the throttle shaft lever to the first step of the fast idle cam.
2. Fully close the choke valve.
3. Use the fast idling set gauge to check the primary throttle valve angle.

Fast Idling Set Gauge: 5-8840-2131-0

The primary throttle valve angle must match the gauge angle.

If the primary throttle valve angle does not match the gauge angle, adjust it with the fast idling adjusting screw.

0803

DISASSEMBLY
(Hitachi-Carburettor, 4ZE1 Engine)

MAJOR COMPONENTS

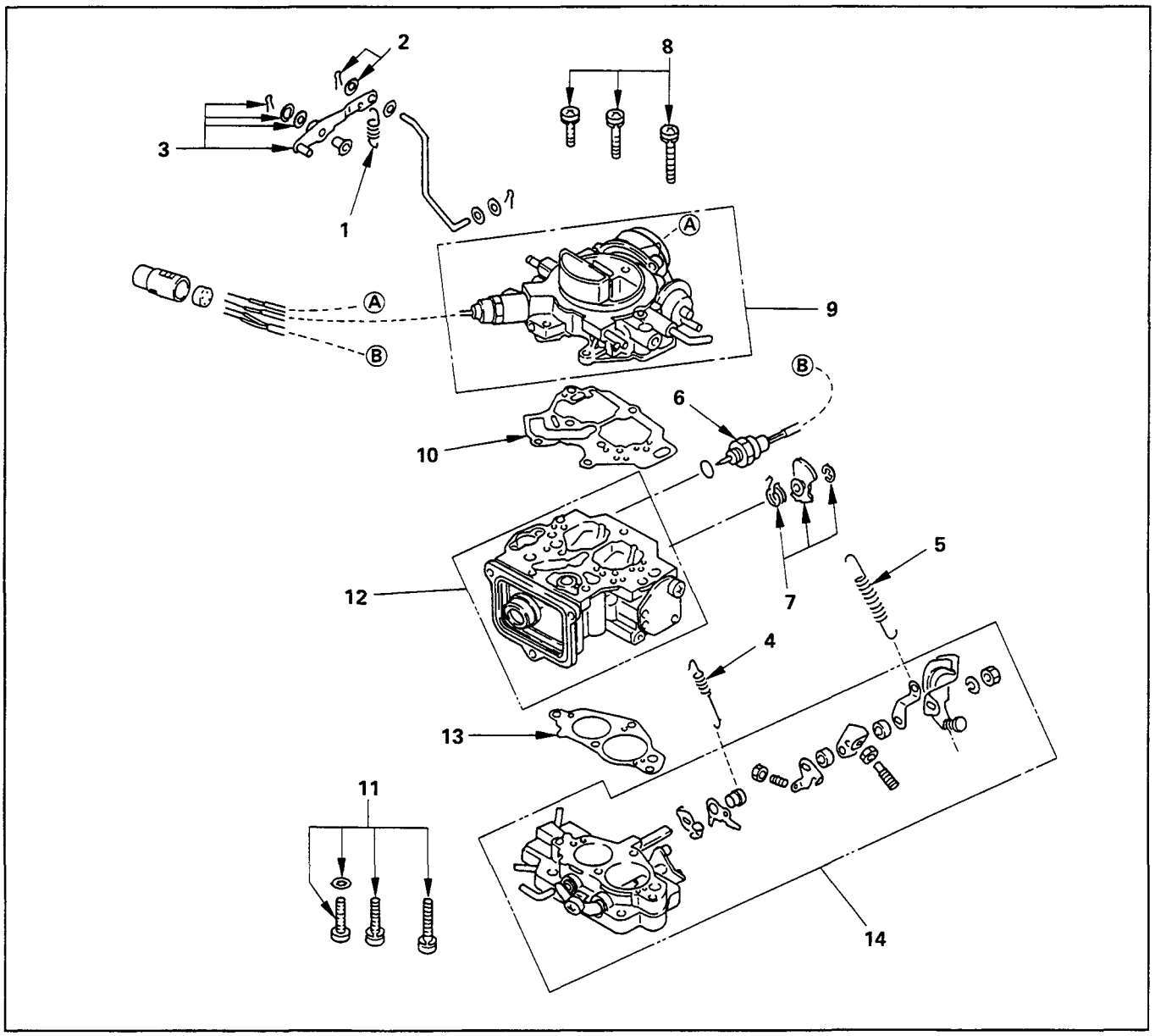

Disassembly Steps

1. Assist spring
2. Pump rod split pin with washer
3. Pump lever and split pin with washer
4. Return spring
5. Main spring
▲ 6. Slow cut solenoid valve
▲ 7. Fast idler cam and spring
8. Choke chamber screw and washer
▲ 9. Choke chamber assembly
10. Choke and float chamber gasket
11. Throttle chamber screw and washer
12. Float chamber assembly
13. Float and throttle chamber gasket
14. Throttle chamber assembly

Important Operations

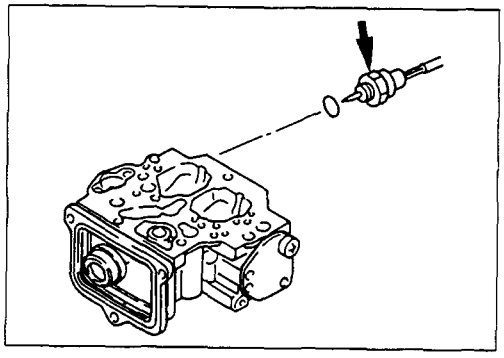

6. Slow Cut Solenoid Valve

Disconnect the slow cut solenoid valve before disassembling the choke chamber.

Take care not to damage the solenoid valve tip.

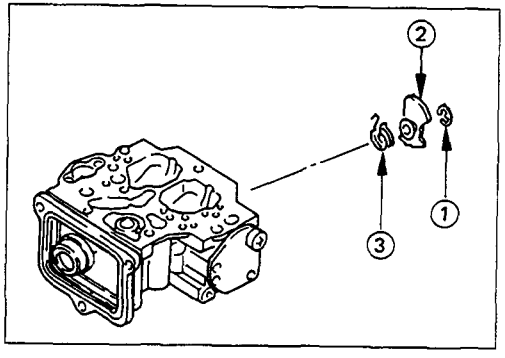

7. Fast Idler Cam and Spring

9. Choke Chamber Assembly

Remove the split pin ①, the fast idler cam ②, and the cam spring ③ from the float chamber shaft.

MINOR COMPONENTS

CHOKE CHAMBER AND FLOAT CHAMBER ASSEMBLY

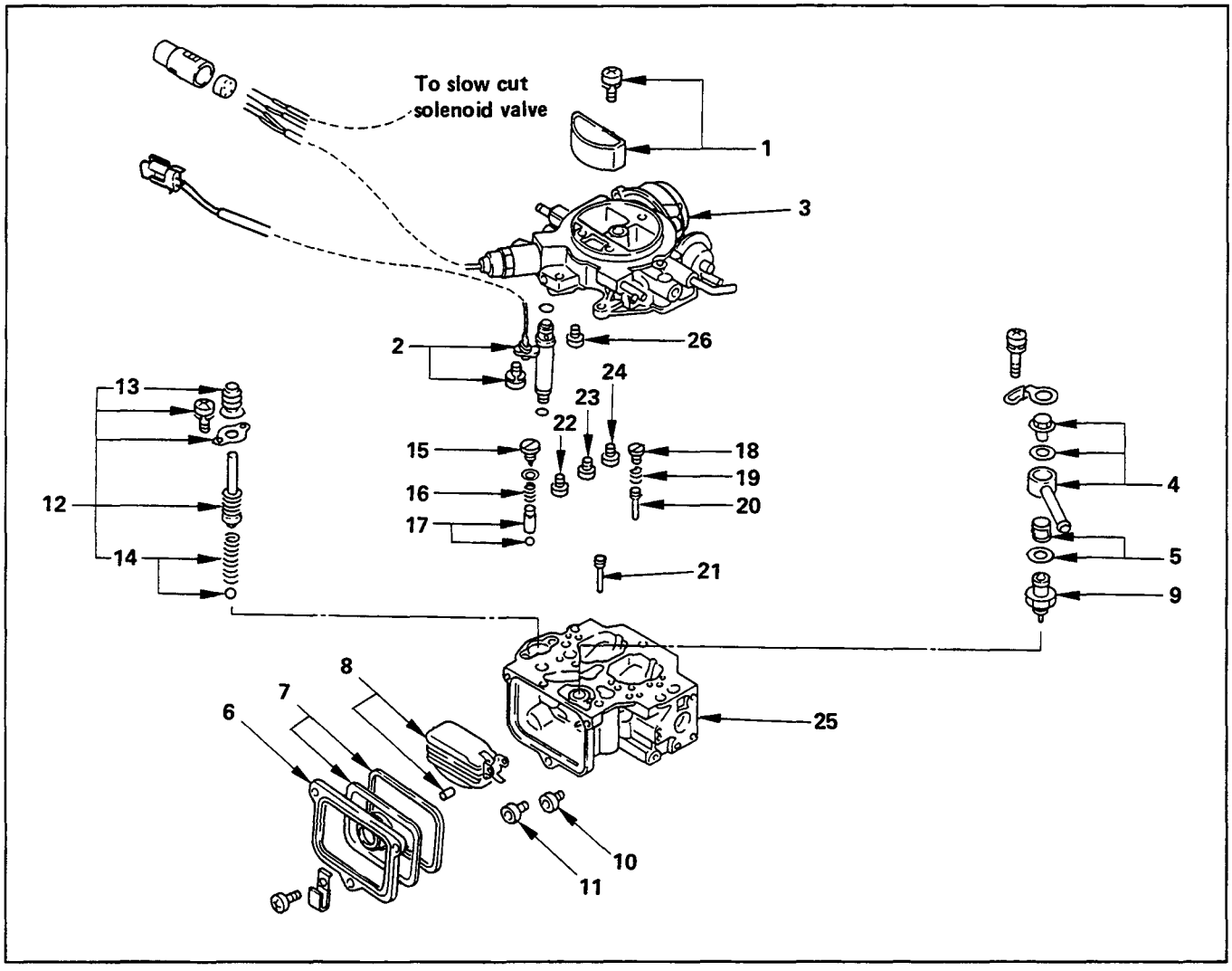

Disassembly Steps

1. Vent cover
▲ 2. Duty solenoid valve
3. Choke chamber
4. Fuel nipple
5. Fuel filter
6. Level gauge cover
7. Level gauge and rubber seal
▲ 8. Float and collar
▲ 9. Needle valve
10. Secondary main jet
11. Primary main jet
▲ 12. Piston
13. Pump cover
14. Piston return spring
15. Pump set screw
16. Injector spring
17. Injector weight
18. Taper plug
19. Slow jet spring
20. Primary slow jet
21. Secondary slow jet
22. Primary main air bleed
23. Secondary main air bleed
24. Primary slow air bleed
25. Float chamber
▲ 26. Power jet

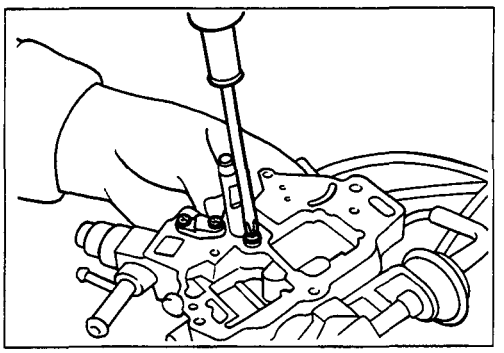

Important Operations

2. Duty Solenoid Valve ('91 Swiss, Sweden & '92 Germany models)

1) Cut the solenoid valve cord.
2) Loosen the three screws holding the valve in place.
3) Pull the valve from the choke chamber.

Note:

Do not remove the duty solenoid valve unless repair or replacement is required.

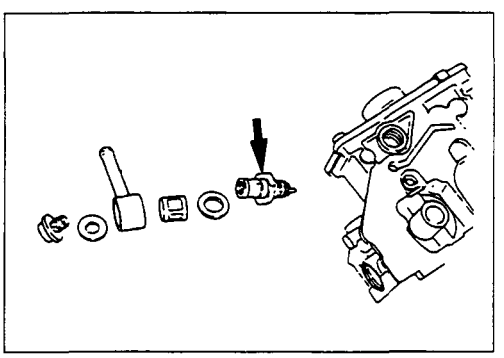

8. Float and Collar

9. Needle Valve

Take care not to lose the collar.

Do not allow the needle valves to fall free.

Take care not to damage the needle valve.

12. Piston

Take care not to lose the check ball.

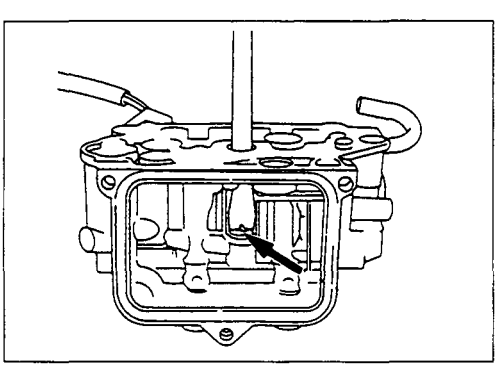

26. Power Jet (Except '91 model, Swiss & Sweden, '92 model, Germany)

Be sure to place a screwdriver properly into the slot to prevent valve rod damage.

THROTTLE CHAMBER ASSEMBLY

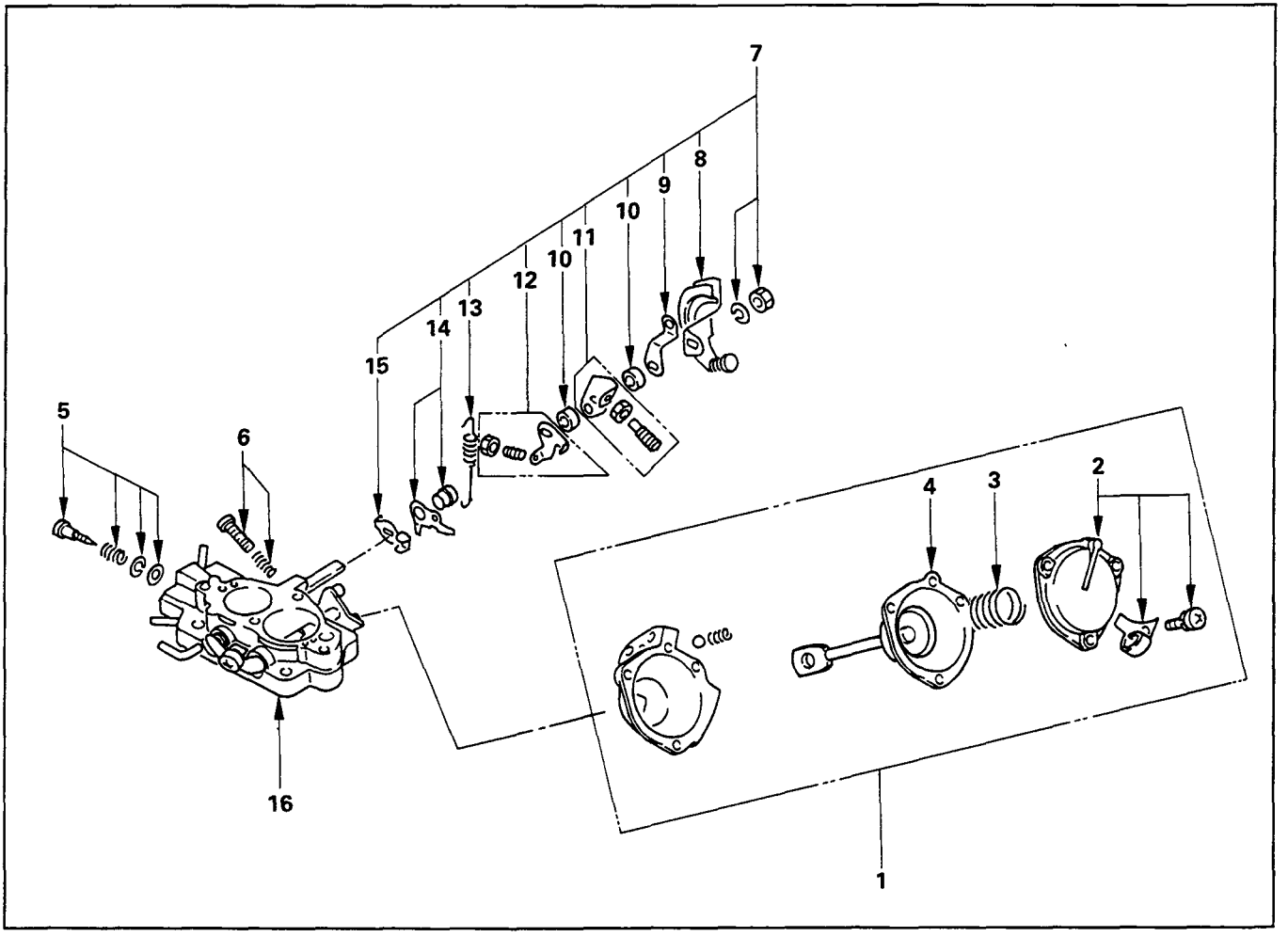

080303000302B

Disassembly Steps

1. Diaphragm chamber assembly
▲ 2. Diaphragm chamber cover
▲ 3. Diaphragm spring
▲ 4. Diaphragm
▲ 5. Idler adjusting screw
6. Throttle adjusting screw
▲ 7. Throttle shaft nut and washer
▲ 8. Throttle lever
▲ 9. Spring hanger
▲ 10. Shaft collar
▲ 11. Fast idler adjusting lever and screw
▲ 12. Kick lever
▲ 13. Return spring
▲ 14. Return plate and sleeve
▲ 15. Adjusting lever
16. Throttle chamber

Important Operations

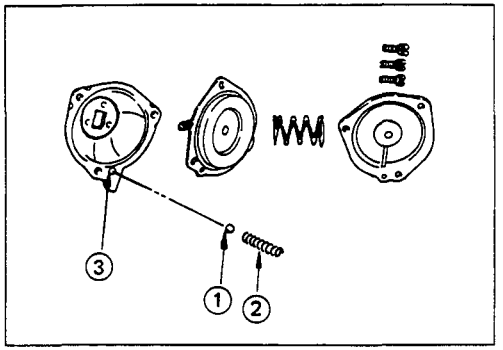

2. Diaphragm Chamber Cover

3. Diaphragm Spring

4. Diaphragm

Do not allow the ball ① and the spring ② to fall from the diaphragm chamber vacuum hole ③ during the disassembly procedure.

Take care not to lose or misplace the disassembled parts.

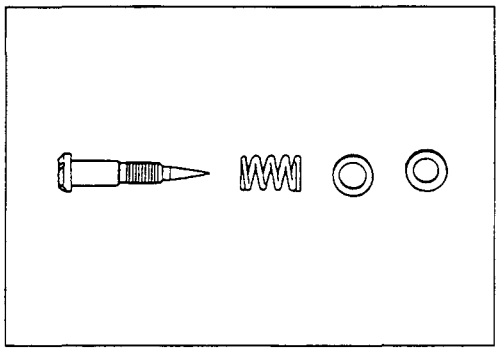

5. Idler Adjusting Screw

Take care not to damage the adjusting screw tip after disassembly.

7. Throttle Shaft Nut and Washer

Remove the steps number 7 to 15 parts only if repair or replacement is required.

INSPECTION AND REPAIR (HITACHI)

Make the necessary adjustments, repairs, and part replacements if excessive wear or damage is discovered during inspection.

Cleaning

1. Carefully clean the disassembled parts (excluding the O-rings, the gaskets, and the electrical parts) with carburetor cleaner.

   Carburetor parts are extremely delicate. Handle them carefully to avoid damage.
2. Use dry air to blow each of the carburetor passages free of foreign material.

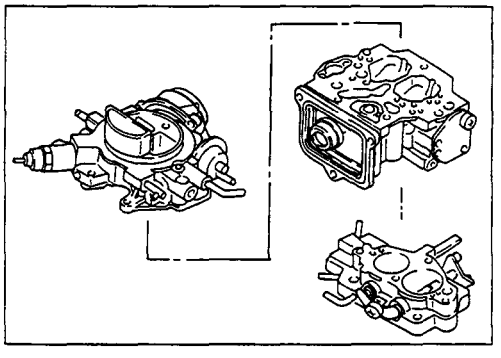

Choke Chamber, Float Chamber, and Throttle Chamber

1. Insert the choke chamber, the float chamber, and the throttle chamber fitting surfaces for cracks or other flaws.
   If there are cracks or other flaws, the parts must be replaced.
2. Inspect the shafts and the links for deformation and excessive wear.
   If there is deformation and excessive wear, the parts must be replaced.

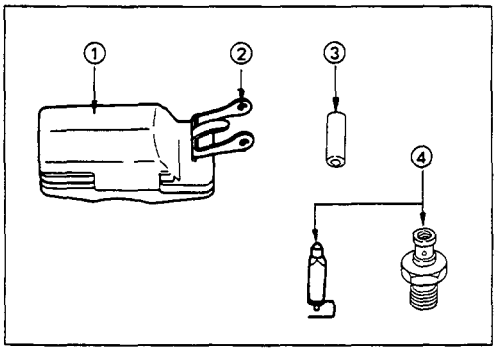

Float and Needle Valve

1. Immerse the float and needle valve in gasoline to clean them.
2. Check the following parts for excessive wear and damage.
   ① Float
   ② Float pin hole
   ③ Float pin dollar
   ④ Needle valve and seat

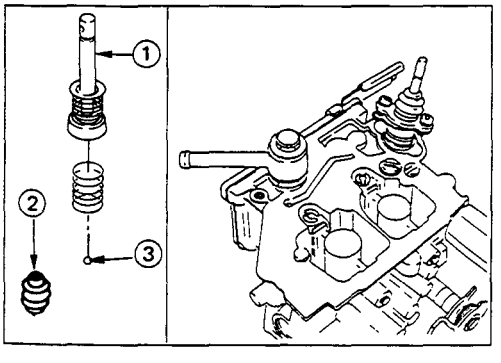

Piston

Inspect the piston ① and the piston boot ② for excessive wear and damage.

Take care not to lose the check ball ③.

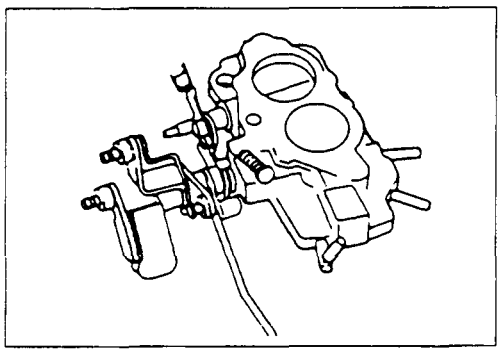

Throttle Chamber

1. Inspect the slow port, the idle port, and the other throttle chamber openings for restrictions.
2. Inspect the primary throttle valve and the secondary throttle valve for carbon deposits and excessive wear.
3. Inspect the throttle valve shaft for wear.
4. Inspect the idler adjusting screw seating faces for step wear.
   Inspect the threads for damage.

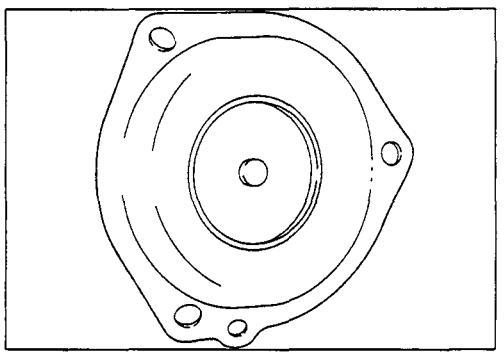

Diaphragm

Inspect the diaphragm for deterioration and damage.

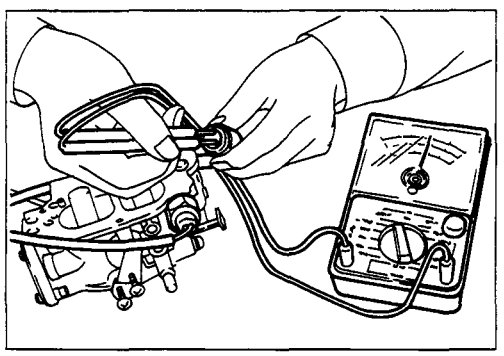

Slow Cut Solenoid Valve

1. Inspect the slow cut solenoid valve body and spring spool for excessive wear and damage.
2. Use an ohmmeter to measure the resistance between the solenoid valve positive terminal and negative terminal.

   If the measured resistance is outside the specified range, the slow cut solenoid valve must be replaced.

Slow Cut Solenoid Valve Resistance	Ohms
31.9 – 43.3 at 20°C (68°F)	

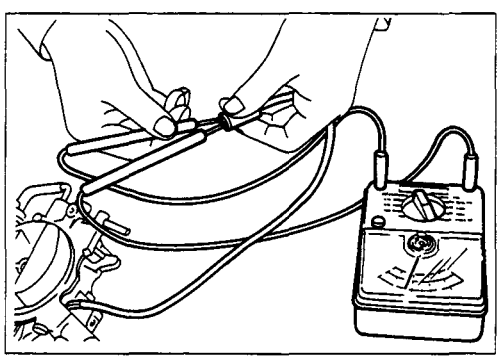

Duty Solenoid Valve (From '91 Swiss & Sweden, '92 Germany models)

Use an ohmmeter to measure the resistance between the solenoid valve positive terminal and negative terminal.

If the measured resistance is outside the specified range, the rear holder and the connectors) must be replaced.

Duty Solenoid Valve Resistance	Ohms
34.7 – 46.9 at 20°C (68°F)	

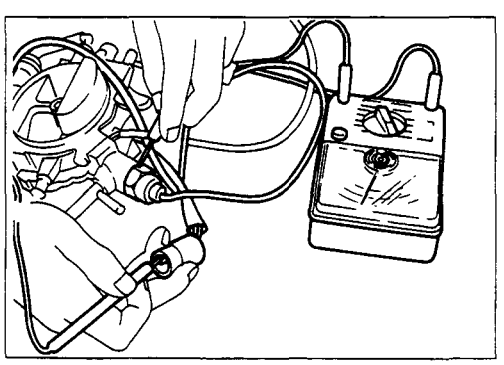

Switch Vent Solenoid Valve (If equipped)

Use an ohmmeter to measure the resistance between the solenoid valve positive terminal and ground (valve body).

If the measured resistance is outside the specified range, the switch vent solenoid valve must be replaced.

Switch Vent Solenoid Valve Resistance	Ohms
25.1 – 34.1 at 20°C (68°F)	

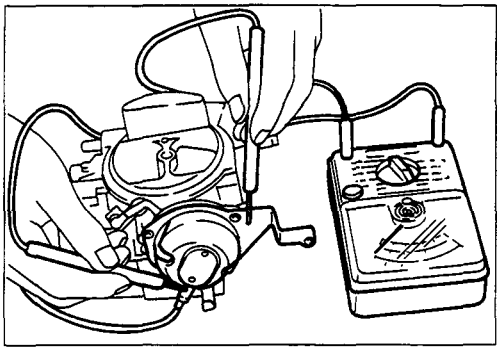

Thermostat

Use an ohmmeter to measure the resistance between the thermostat positive terminal and ground (thermostat body).

If the measured resistance is outside the specified range, the thermostat must be replaced.

Thermostat Resistance	Ohms
1.1 – 3.1 at 20°C (68°F)	

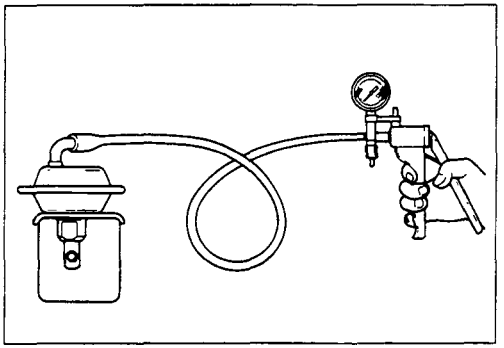

Choke Piston

Apply a vacuum to the choke piston diaphragm.

The diaphragm must maintain the vacuum for several seconds.

If it does not, the choke chamber assembly must be replaced.

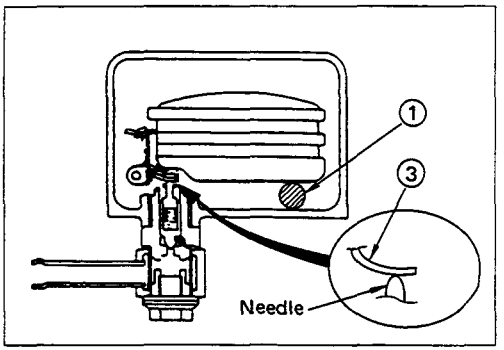

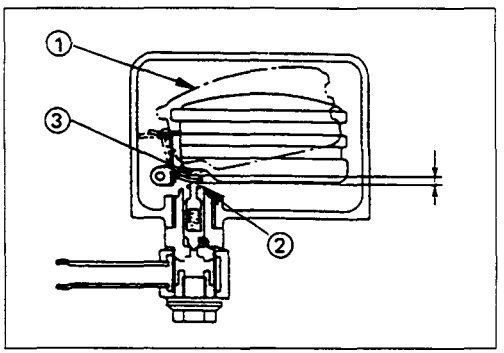

MEASUREMENT AND ADJUSTMENT

1. Float Level Adjustment

Place the test bar ① between the float tip and the upper face of float chamber as shown in the illustration.
If the float level height is outside the specified range, adjust it by carefully bending the float seat ③ with your hands.

Float Level Height	mm (in)
7.2 (0.28)	

2. Needle Valve Stroke Adjustment

1) Hold the carburetor upside down.
2) Fully riase the float ①.
3) Measure the clearance between the valve stem ② (resting at the bottom position) and the float seat ③.

If the needle valve stroke is outside the specified value, adjust the needle valve stroke by carefully bending the float stopper.

Valve Stem and Float Seat Clearance	mm (in)
1.5 (0.059)	

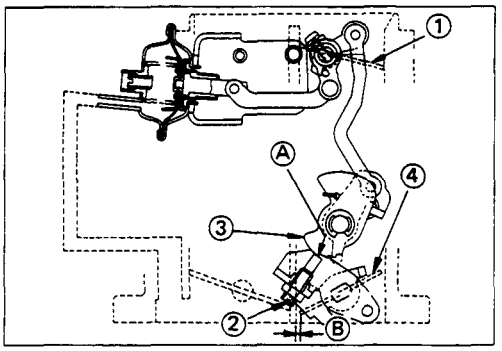

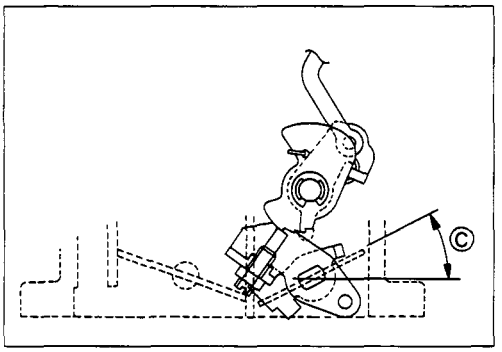

Fast Idling

1. Fully close the choke valve ①.
2. Align the fast idling screw ② with the fast idling cam ③ first step Ⓐ.
3. Measure the clearance Ⓑ between the primary throttle valve ④ and the throttle valve chamber wall.

   If the measured clearance is outside the specified range, adjust it with the idling adjusting screw ②.

Throttle Valve and Throttle Valve Chamber Wall Clearance	mm(in)
1.23 – 1.48 (0.048 – 0.058)	

(Reference)

Primary Throttle Valve Angle Ⓒ	Deg.
25	

* When the clearance between the throttle valve and the throttle valve chamber wall is within the specified range.

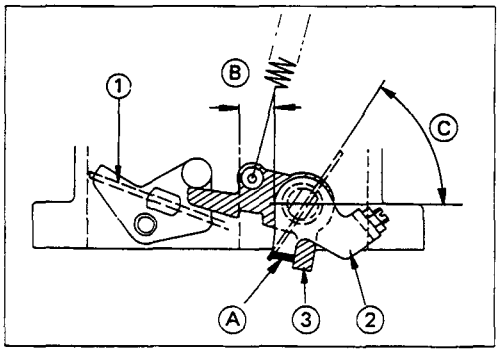

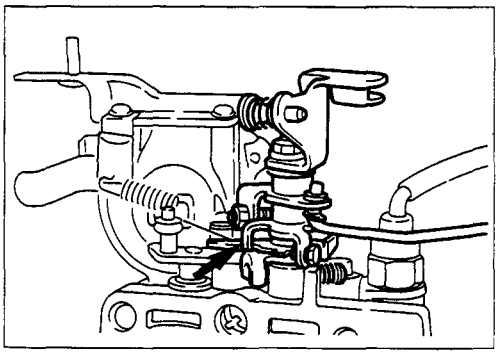

Primary Throttle Valve and Secondary Throttle Valve Interlock

1. Slowly open the primary throttle valve ① until the kick lever ② tang Ⓐ contacts the return plate ③.
2. Measure the clearance Ⓑ between the throttle valve and the throttle valve chamber wall.

   If the measured clearance is outside the specified range, adjust it by carefully bending the kick lever tang.

Throttle Valve and Throttle Valve Chamber Wall Clearance Ⓑ	mm(in)
6.9 – 8.4 (0.27 – 0.33)	

(Reference)

Primary Throttle Valve Angle Ⓒ	Deg.
57	

* When the clearance between the primary throttle valve and the throttle valve chamber wall is within the specified range.

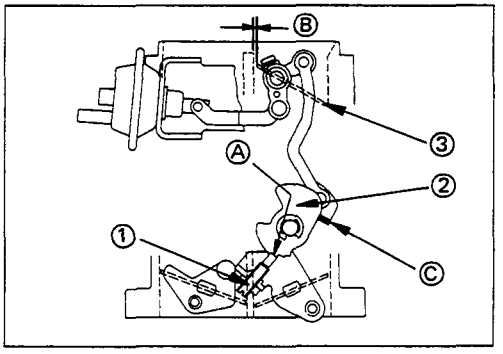

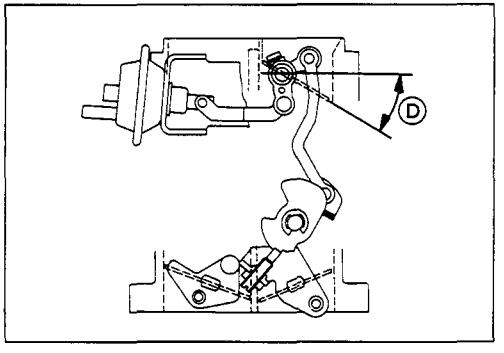

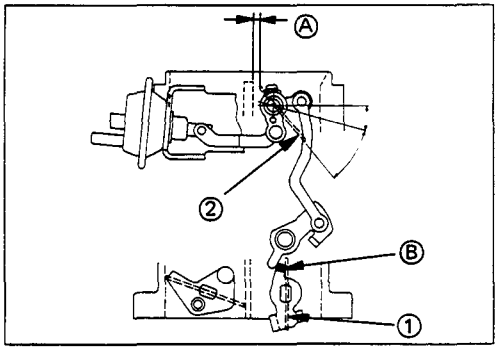

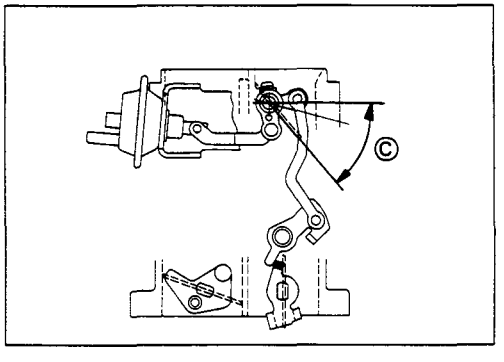

Choke Valve Opening

1. Move the fast idling screw ① tip against the fast idling cam ② second step Ⓐ.
2. Measure the clearance Ⓑ between the choke valve ③ and the choke valve chamber wall.

   If the measured clearance is outside the specified range, adjust it by carefully bending the counter lever tang Ⓒ.

Choke Valve and Choke Valve Chamber Wall Clearance	mm(in)
0.8 — 1.3 (0.03 — 0.05)	

(Reference)

Choke Valve Angle Ⓓ	Deg.
30	

* When the clearance between the choke valve and the choke valve chamber wall is within the specified range.

Unloader

1. Fully open the primary throttle valve ①.
2. Measure the clearance Ⓐ between the choke valve ② and the choke valve chamber wall.

   If the measured clearance is outside the specified range, adjust it by carefully bending the adjusting lever tang Ⓑ.

Choke Valve and Choke Valve Chamber Wall Clearance	mm(in)
2.7 — 3.3 (0.11 — 0.13)	

(Reference)

Choke Valve Angle Ⓒ	Deg.
50	

* When the clearance between the choke valve and the choke valve chamber wall is within the specified range.

0804

REASSEMBLY

MINOR COMPONENTS

THROTTLE CHAMBER ASSEMBLY

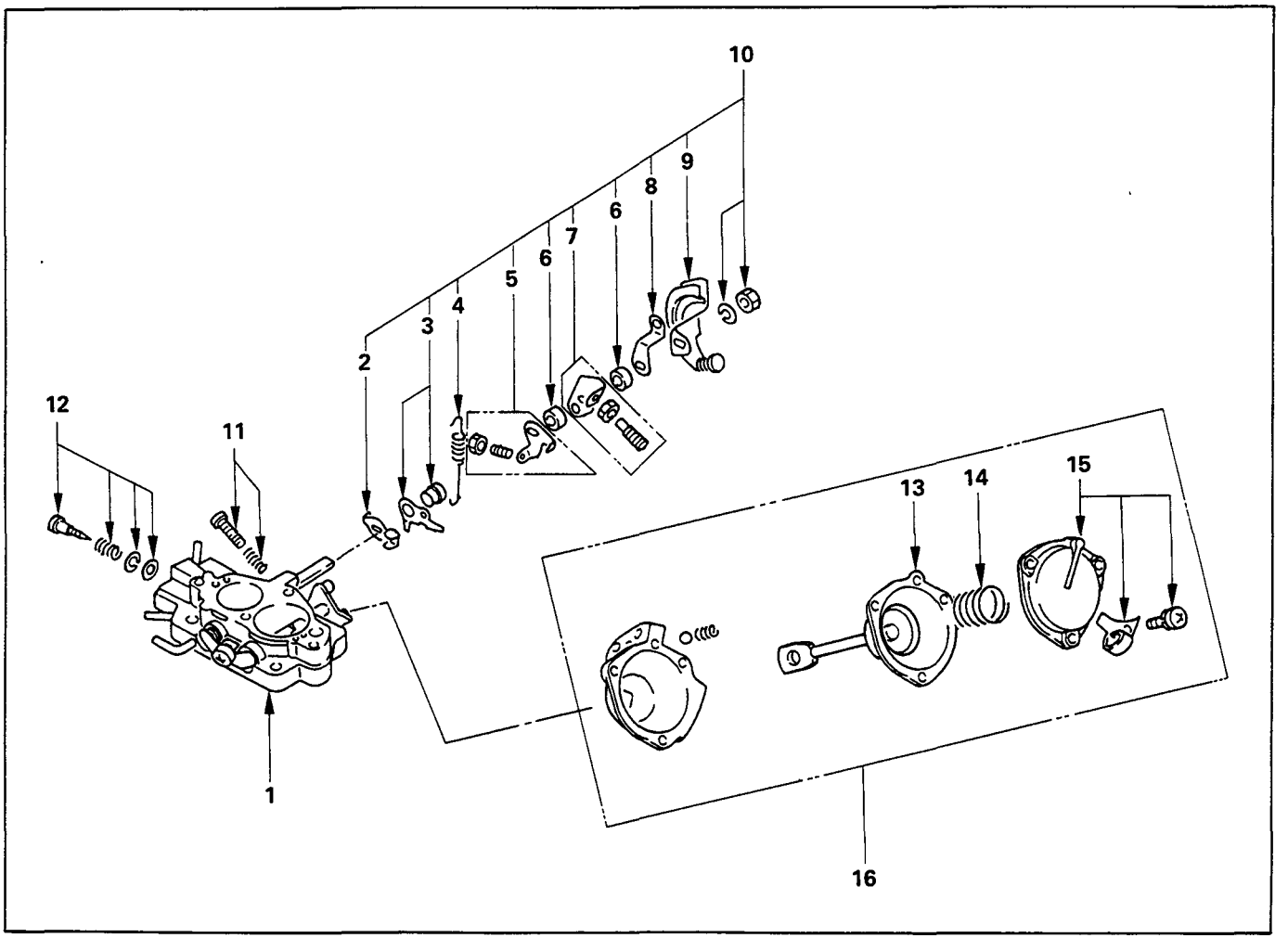

Reassembly Steps

1. Throttle chamber
2. Adjusting lever
3. Return plate and sleeve
4. Return spring
5. Kick lever
6. Shaft collar
7. Fast idler adjusting lever and screw
8. Spring hanger
9. Throttle lever
10. Throttle shaft nut and washer
11. Throttle adjusting screw
12. Idler adjusting screw
13. Diaphragm
14. Diaphragm spring
15. Diaphragm chamber cover
16. Diaphragm chamber assembly

CHOKE CHAMBER AND FLOAT CHAMBER ASSEMBLY

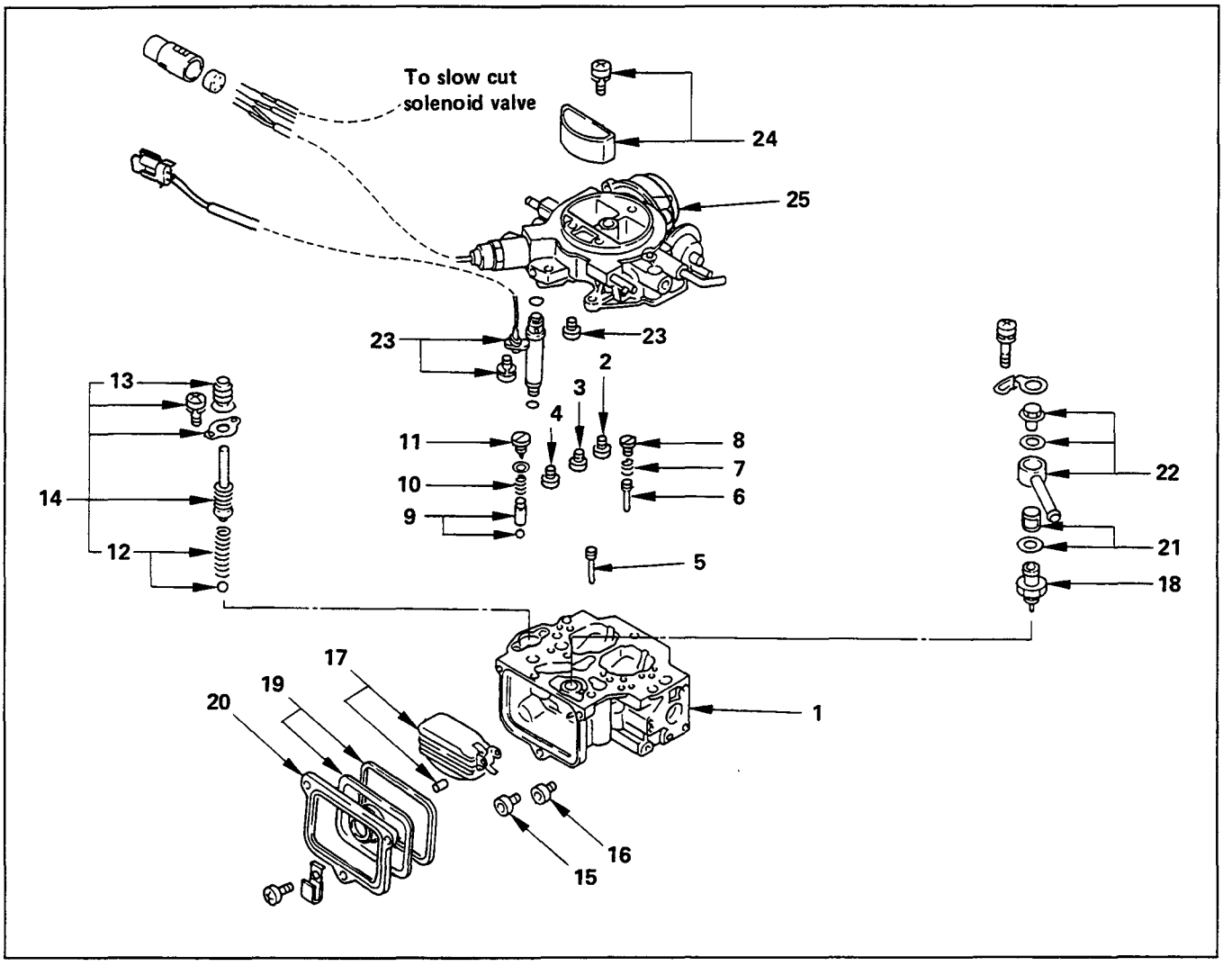

Reassembly Steps

1. Float chamber
2. Primary slow air bleed
3. Secondary main air bleed
4. Primary main air bleed
5. Secondary slow jet
6. Primary slow jet
7. Slow jet spring
8. Taper plug
9. Injector weight
10. Injector spring
11. Pump set screw
12. Piston return spring
13. Pump cover
14. Piston
15. Primary main jet
16. Secondary main jet
17. Float and collar
18. Needle valve
19. Level gauge and rubber seal
20. Level gauge cover
21. Fuel filter
22. Fuel nipple
23. Duty solenoid valve or power jet
24. Vent cover
25. Choke chamber

MAJOR COMPONENTS

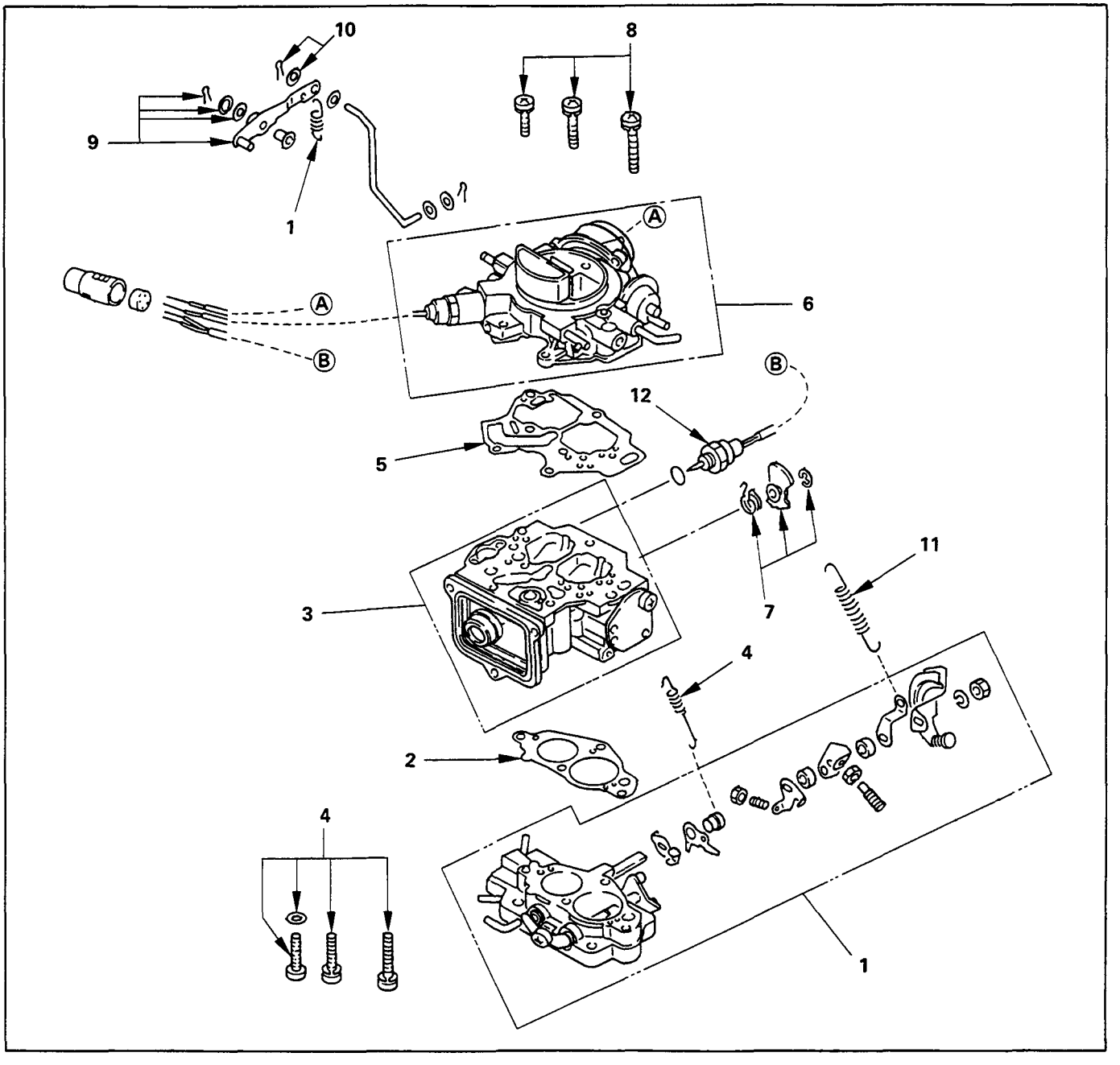

Reassembly Steps

1. Throttle chamber assembly
2. Float and throttle chamber gasket
3. Float chamber assembly
4. Throttle chamber screw and washer
5. Choke and float chamber gasket
6. Choke chamber assembly
7. Fast idler cam and spring
8. Choke chamber screw and washer
9. Pump lever and split pin with washer
10. Pump rod split pin with washer
11. Main spring
12. Slow cut solenoid valve

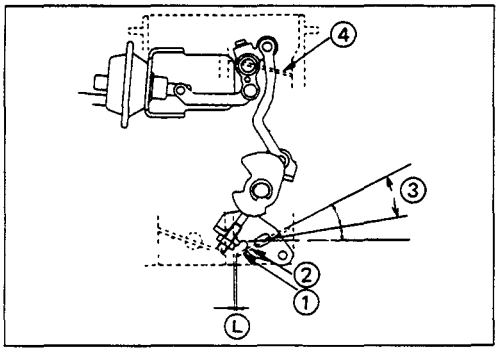

CARBURETOR ADJUSTMENT (Hitachi-Carburetor)

Primary Throttle Valve

The fast idling adjusting screw ① should open the primary throttle valve ② to an angle of 15° ③ when the choke valve ④ is completely closed.

Check and adjust the primary throttle valve opening angle as follows:

1) Close the choke valve ④ completely.
2) Turn the throttle stop screw all the way in.
3) Measure the clearance between the primary throttle valve and the throttle valve chamber wall at the center of the throttle valve.

Throttle Valve and Throttle Valve Chamber Wall Clearance Ⓛ	mm(in)
1.28 — 1.51 (0.05 — 0.06)	

4) If required, use the fast idling adjusting screw to adjust the clearance.

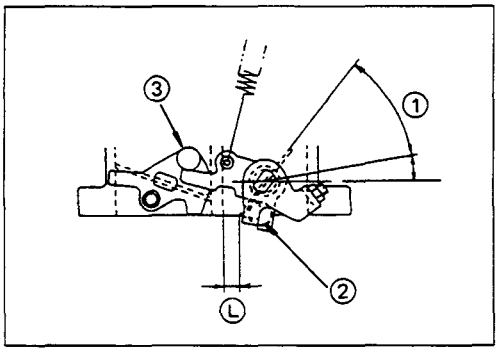

Linkage

When the primary throttle valve is opened to an angle of 47° ①, the adjusting plate (interlocked with the primary throttle valve) makes contact with the kick lever at point ②.

Further opening the primary throttle valve pulls the return plate away from the stopper ③, allowing the secondary throttle valve to open.

Check and adjust the secondary throttle valve opening point as follows:

1) Measure the clearance between the primary throttle valve and the throttle valve chamber wall at the center of the throttle valve.
   The adjusting plate must be contacting the kick lever at point ②.

Throttle Valve and Throttle Valve Chamber Wall Clearance Ⓛ	mm(in)
6.1 — 7.6 (0.24 — 0.30)	

2) If required, adjust the clearance by carefully bending the kick lever at point ②.

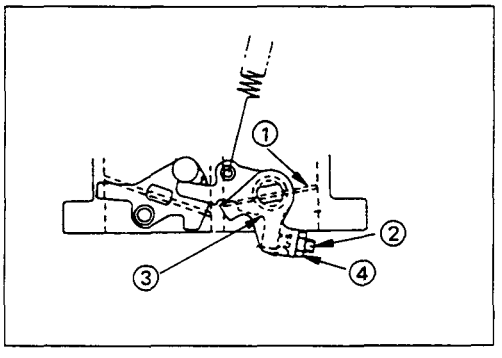

Kick Lever

1) Turn out the throttle adjusting screw until the primary throttle valve ① is completely closed.
2) Loosen the lock nut on the kick lever screw ②.
3) Turn the kick lever screw until it makes contact with the return plate ③.
4) Tighten the lock nut ④.

FUEL PUMP

REMOVAL AND INSTALLATION

Read this Section carefully before performing any removal and installation procedure. This Section gives you important points as well as the order of operation. Be sure that you understand everything in this Section before you begin.

Important Operations — Installation

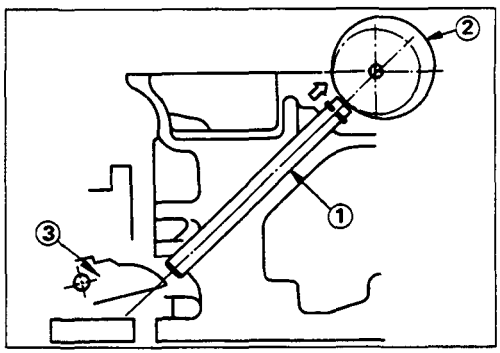

▲ **Fuel Pump**

1) Remove the cylinder head cover.
2) Place the No. 4 piston at top dead center.
3) Lift the push rod ① toward the camshaft ②.
   Hold the push rod in the raised position.
4) Install the fuel pump ③.
5) Tighten the fuel pump bolts to the specified torque.

Fuel Pump Bolt Torque	kg·m(lb.ft/N·m)
2.7 ± 0.5 (19.5 ± 3.6/26.5 ± 4.9)	

Note:

Start the engine and check for oil leakage around the gaskets and fuel leakage from the hose joints.

080501

INSPECTION AND REPAIR

Make the necessary adjustments, repairs, and part replacements if excessive wear or damage is discovered during inspection.

08050101

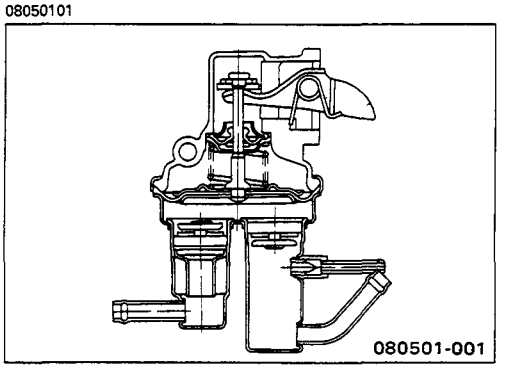

08050102

Fuel Pump External Inspection

1. Check the outside of the fuel pump for cracks and other damage.

   Replace the fuel pump if cracks or other damage are discovered.

2. Check for excessive wear between the rocker arm and the camshaft contact faces.

   If there is excessive wear, the fuel pump must be replaced.

Fuel Pump Internal Inspection

Perform following steps before beginning the inspection procedure.

1. Pour a small amount of clean fuel into the fuel pump.
2. Moisten the valve seal with clean fuel.

0805010201A

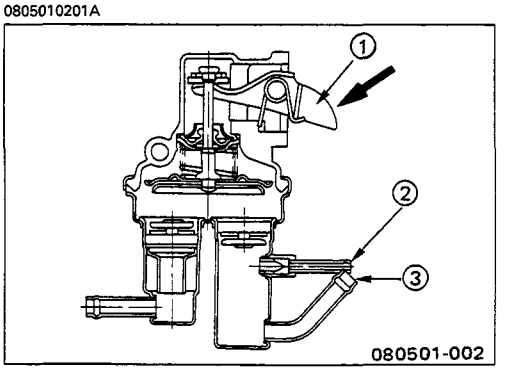

Inlet Valve

1. Move the rocker arm ① toward the pump and hold it in that position.
2. Block the return pipe ② and the outlet pipe ③ with your fingers.
3. Carefully push the rocker arm back to its original position.

   Your fingers must be blocking the pipes at this time.

   There should be a marked increase in rocker arm play after the rocker arm is returned to its original position.

   If there is not a marked increase in rocker arm play, the fuel pump must be replaced.

0805010201B

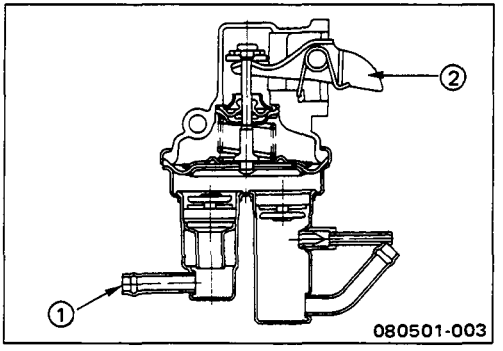

Outlet Valve

1. Block the inlet pipe ① with your fingers.
2. Move the rocker arm ② to check for excessive play.

   The fuel pump must be replaced if there is excessive play.

Note:

Do not apply too much force to the rocker arm.

0805010201C

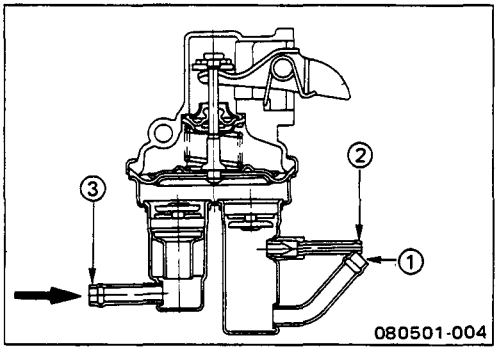

Diaphragm

1. Block the outer pipe ① and the return pipe ②.
2. Use a leak tester to apply 0.3 kg/cm^2 (4.3 psi/29.4 kPa) of air pressure to the inlet pipe ③.
3. Release the leak tester handle.

   There should be no sudden drop in air pressure.

   If there is a sudden drop in air pressure, the fuel pump must be replaced.

0805010201D

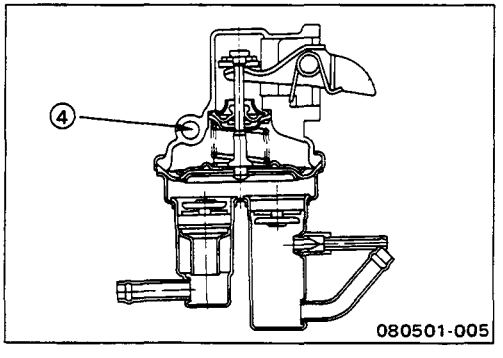

Oil Seal

1. Use a leak tester to apply 0.1 kg/cm^2 (1.4 psi/9.8 kPa) of air pressure to the air pipe ④.
2. Release the leak tester handle.

   There should be no sudden drop in air pressure.

   If there is a sudden drop in air pressure, the fuel pump must be replaced.

FUEL FILTER

REMOVAL AND INSTALLATION

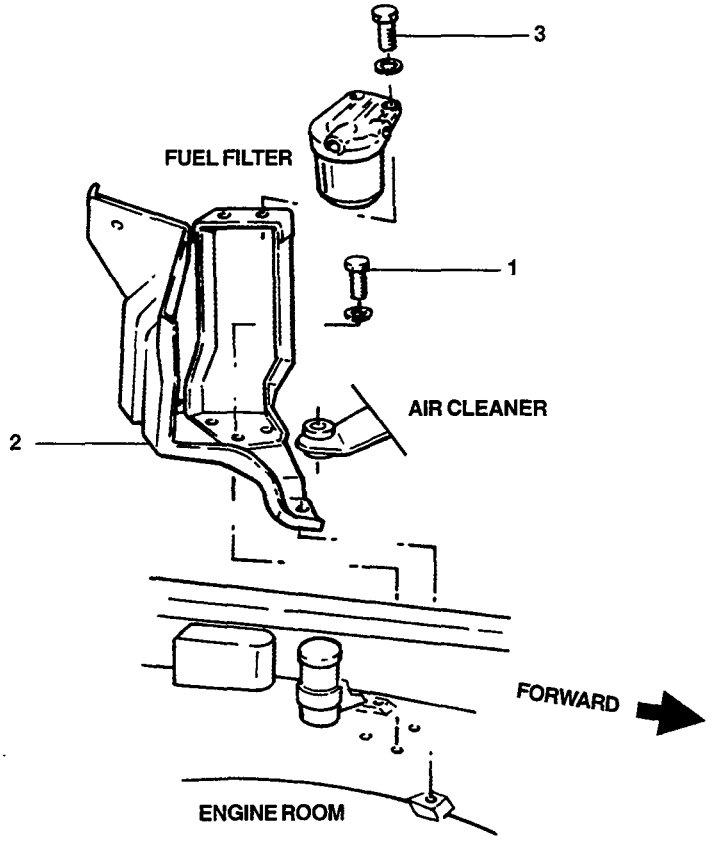

Removal Steps

1. Bolt; Bracket to body
2. Bracket; Fuel filter
3. Bolt; Fuel filter

Installation Steps

3. Bolt; Fuel filter
2. Bracket; Fuel filter
1. Bolt; Fuel filter

FUEL TANK
REMOVAL AND INSTALLATION

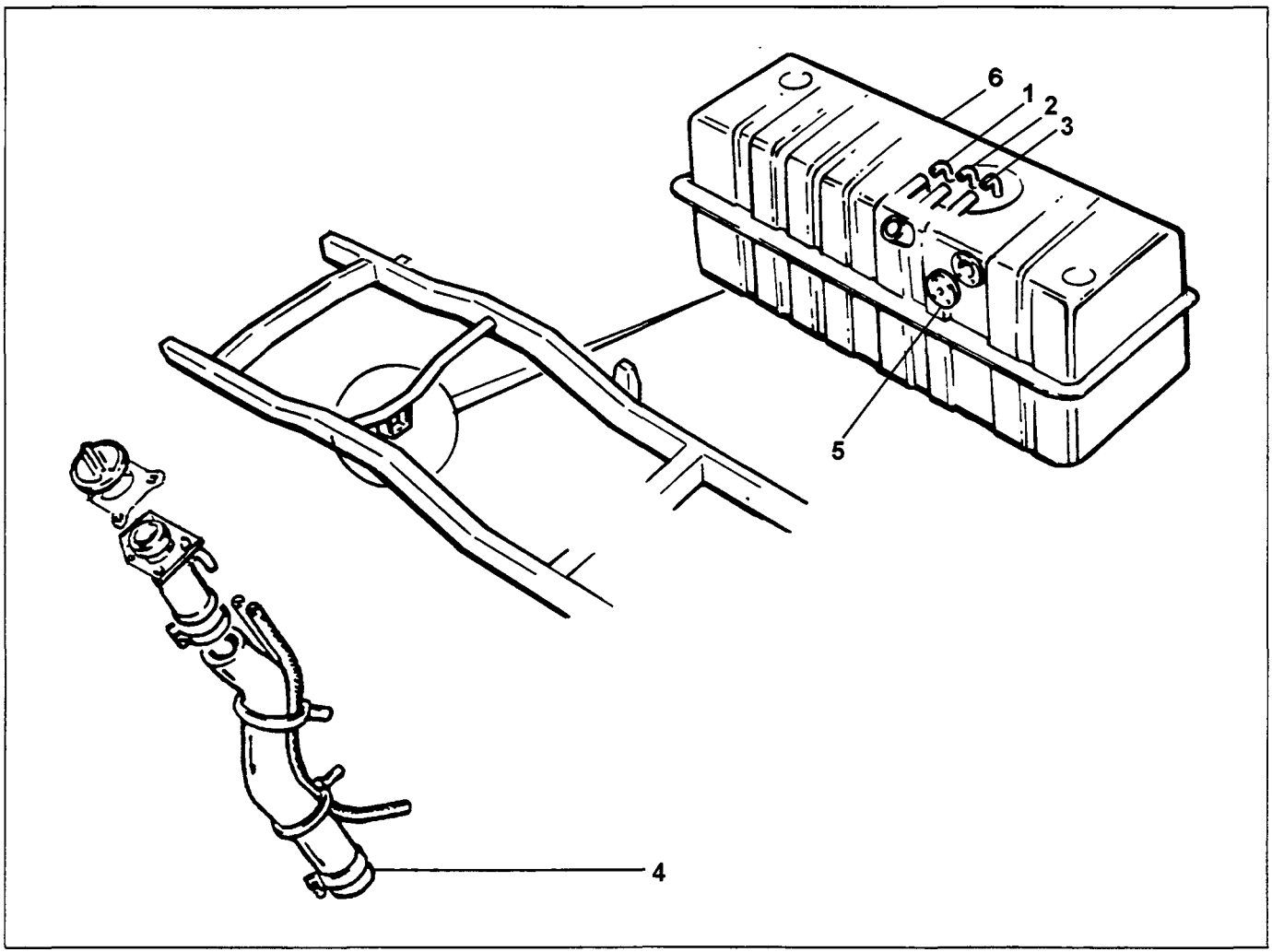

Removal Steps

1. Breather hose
2. Fuel delivery hose
3. Fuel return hose
4. Filler neck hose
5. Fuel tank unit
6. Tank ASM

Installation Steps

6. Tank ASM
5. Fuel tank unit
4. Filler neck hose
3. Fuel return hose
2. Fuel delivery hose
1. Breather hose

INSPECTION AND REPAIR

Make all necessary adjustments, repairs, and part replacements if wear, damage, or other problems are discovered during inspection.

- Fuel rubber hose
- Evaporator rubber hose
- Fuel filter hose

Visual Check

Check the parts listed at the left for excessive wear and damage.

TROUBLESHOOTING

Refer to this Section to quickly diagnose and repair fuel system problems. Each troubleshooting chart has three headings arranged from left to right.

(1) Checkpoint (2) Trouble Cause (3) Countermeasure

This Section is divided into seven sub-sections:

1. Fuel Over Flowing
2. Fuel Not Reaching Float Chamber
3. Unstable Idling
4. Excessive Fuel Consumption
5. Insufficient Power
6. Flat Spot on Accereleration
7. Flat Spot on High Speed Operation

Note:

V : Variation (Optional on some models)

FUEL OVER FLOWING

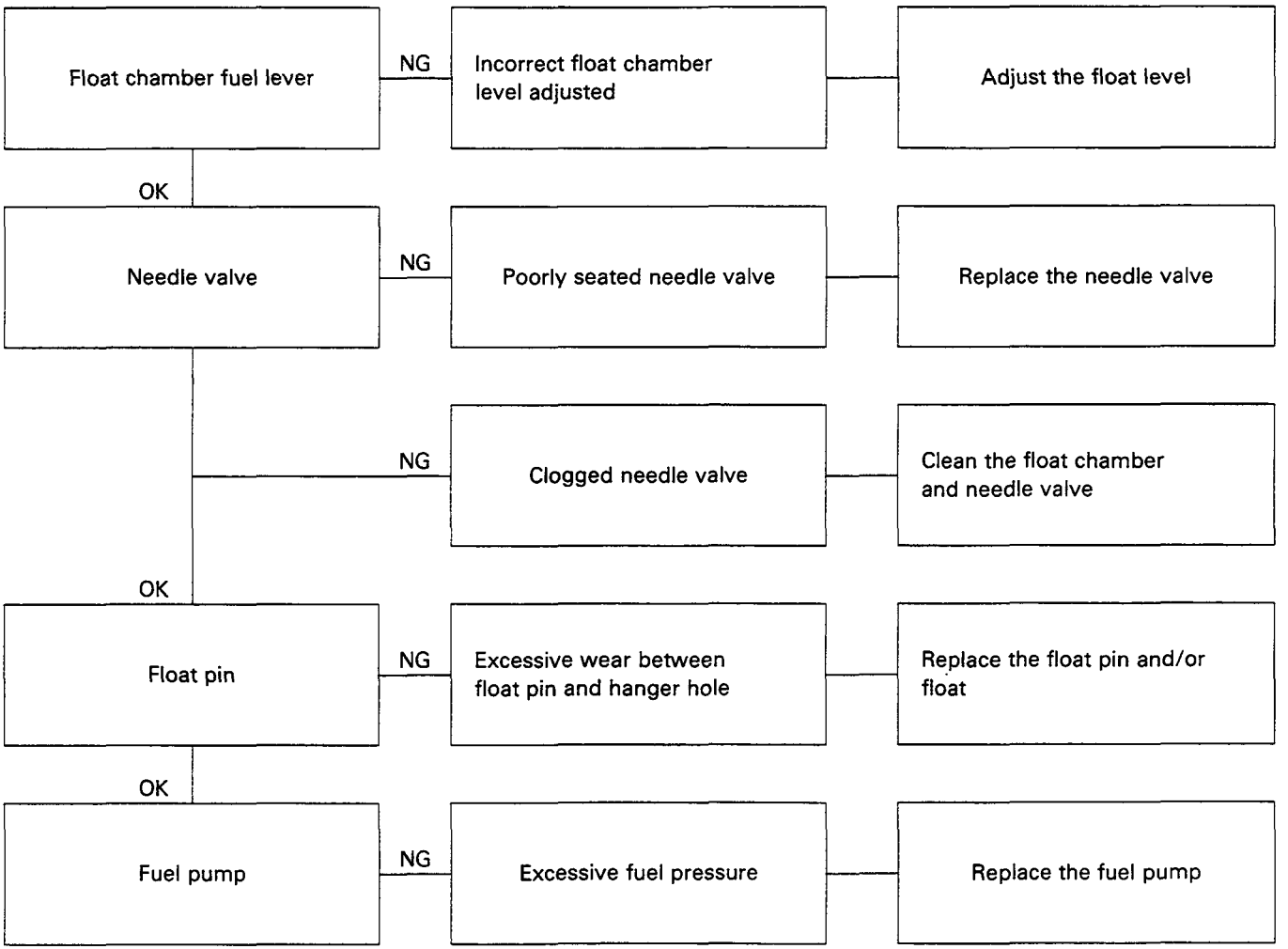

FUEL NOT REACHING FLOAT CHAMBER

Checkpoint		Trouble Cause	Countermeasure
Fuel filter	NG	Clogged fuel filter	Replace the fuel filter
OK			
Fuel supply	NG	Insufficient fuel being delivered to the carburetor	Replace the fuel filter element and/or fuel filter element Clean the fuel pipe
OK			
Fuel strainer	NG	Clogged fuel strainer	Clean or replace the fuel strainer
OK			
Fuel pump	NG	Defective fuel pump	Replace the fuel pump

UNSTABLE IDLING

Checkpoint		Trouble Cause	Countermeasure
Idling system	NG	Idling speed improperly adjusted	Adjust the idling speed
OK			
Slow cut solenoid valve	NG	Defective slow cut solenoid valve	Repair or replace the slow cut solenoid valve
OK			
Choke system	NG	Choke system out of adjustment	Adjust the choke system
OK			
Float chamber fuel level	NG	Fuel level too high or too low	Adjust the float level
OK			
Jet	NG	Jets clogged or damaged	Overhaul the carburetor
OK			
Mixture	NG	Defective mixture control valve	Replace the mixture control valve
OK			
Coasting fuel system	NG	Coasting fuel system not functioning properly	Adjust the coasting richer system and the coasting fuel cut system

Continued on the next page

Continued from the previous page

Checkpoint		Trouble Cause	Countermeasure
EGR valve V	NG	Defective EGR valve	Replace the EGR valve
Thermal vacuum valve V	NG	Thermal vacuum valve does not operate when cold	Replace the thermal vacuum valve
Air cleaner	NG	Clogged air cleaner element	Replace the air cleaner element
Throttle valve	NG	Fail to close completely Second throttle valve	Clean or repair the throttle valve
Slow air bleed	NG	Clogged slow air bleed	Clean the slow air bleed
Idling speed	NG	Idling speed too low	Adjust the idling speed
Carburetor fitting	NG	Loose carburetor intake manifold Defective manifold gasket	Retighten the intake manifold Replace the intake manifold gasket

Continued on the next page

Continued from the previous page

Checkpoint		Trouble Cause	Countermeasure
Ignition timing	NG	Incorrect ignition timing	Adjust the ignition timing
Valve clearance	NG	Valve clearance incorrectly adjusted	Adjust the valve clearance
Valve seating	NG	Valve incorrectly seated	Correct the valve seating
Compression pressure	NG	Blown out cylinder head gasket Worn cylinder liner Piston ring sticking or broken improper seating between the valve and the valve seat	Replace the applicable parts

EXCESSIVE FUEL CONSUMPTION

Checkpoint		Trouble Cause	Countermeasure
Fuel system	NG	Fuel leakage	Repair or replace the applicable parts
OK			
Fuel mixture	NG	Engine misfire due to excessively lean fuel mixture	Refer to "ABNORMAL CONSUMPTION"
	NG	Excessively rich fuel mixture	Refer to "ABNORMAL COMBUSTION"
OK			
Power valve [V]	NG	Open too soon power valve	Adjust the power valve
OK			
Outlet valve	NG	Incorrectly seated outlet valve	Replace the outlet valve
OK			
Vacuum piston [V]	NG	Function is too fast causing power valve to open too soon, or power valve is held open	Clean or replace the vacuum piston
OK			
Carburetor emulsion tube	NG	Clogged emulsion tube	Clean the emulsion tube

Continued on the next page

Checkpoint		Trouble Cause		Countermeasure
Continued from the previous page OK Main jet	NG	Incorrect main jet		Replace the main jet

INSUFFICIENT POWER

Checkpoint		Trouble Cause	Countermeasure
Fuel line	NG	Fuel filter cartridge clogged of fouled	Replace the fuel filter
	NG	Fuel line clogged	Clean the fuel line
	NG	Water particles in the fuel	Replace the fuel
	NG	Use of wrong fuel	Use fuel of the specified octane rating
OK			
Fuel pump	NG	Defective fuel pump	Replace the fuel pump
OK			
Carburetor	NG	Fuel level too low or too high	Adjust the float level
	NG	Clogged main jet	Overhaul the carburetor Clean the jet

Continued on the next page

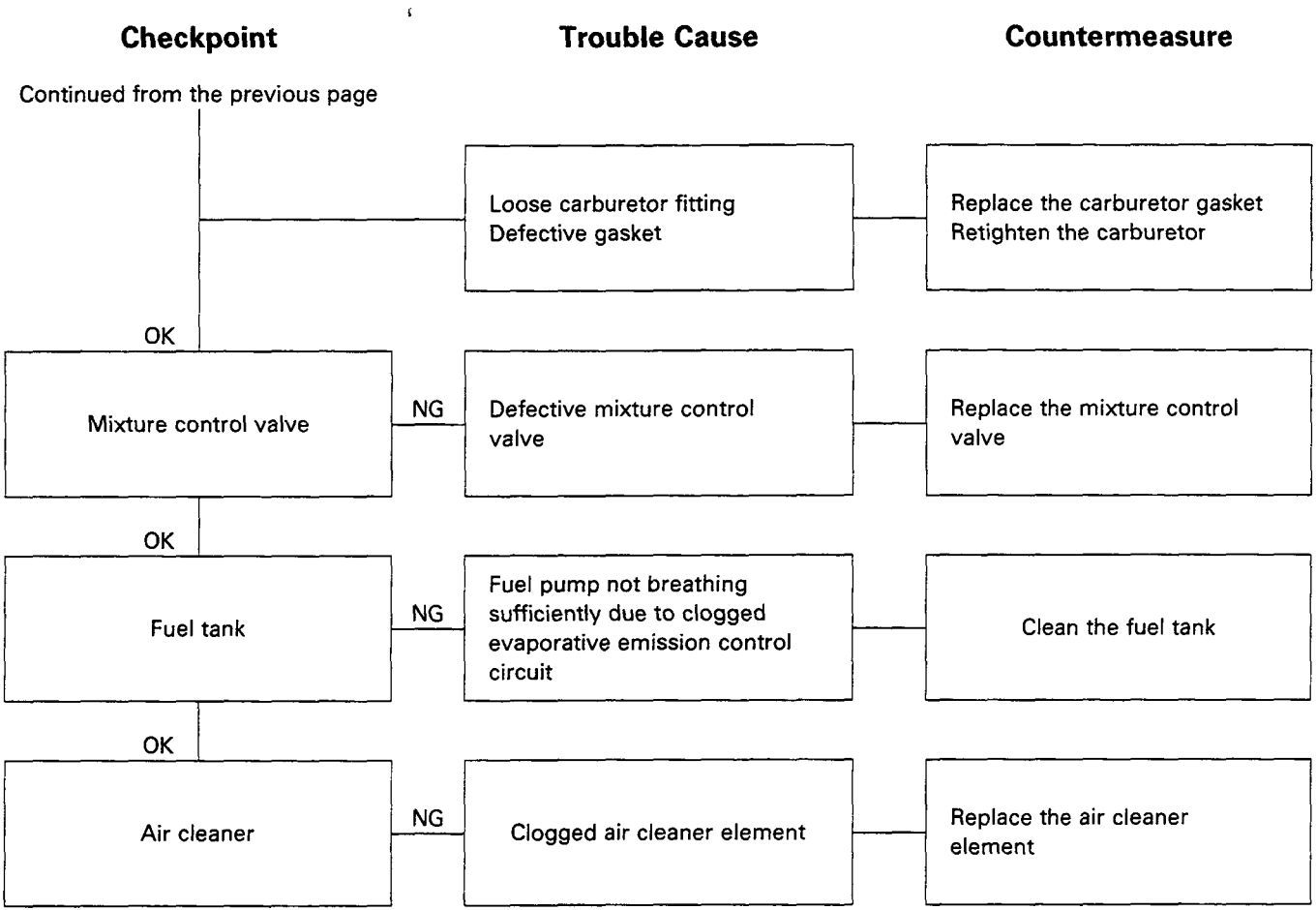
Checkpoint
Trouble Cause
Countermeasure
Continued from the previous page
Loose carburetor fitting
Defective gasket
Replace the carburetor gasket
Retighten the carburetor
OK
Mixture control valve
NG
Defective mixture control valve
Replace the mixture control valve
OK
Fuel tank
NG
Fuel pump not breathing sufficiently due to clogged evaporative emission control circuit
Clean the fuel tank
OK
Air cleaner
NG
Clogged air cleaner element
Replace the air cleaner element

FLAT SPOT ON ACCELERATION

Checkpoint		Trouble Cause	Countermeasure
Engine idling	NG	Incorrectly engine idling	Adjust the engine idling
OK			
Carburetor	NG	Defective vent switching valve	Replace the vent switching valve
	NG	Excessive play accelerator pump linkage	Adjust or replace the pump linkage or carburetor
	NG	Insufficient fuel supply	Replace the accelerator
	NG	Clogged main jet	Clean or replace the main jet
	NG	Clogged fuel strainer	Clean or replace the fuel strainer
OK			
Fuel pump	NG	Defective fuel pump	Replace the fuel pump

FLAT SPOT ON HIGH SPEED OPERATION

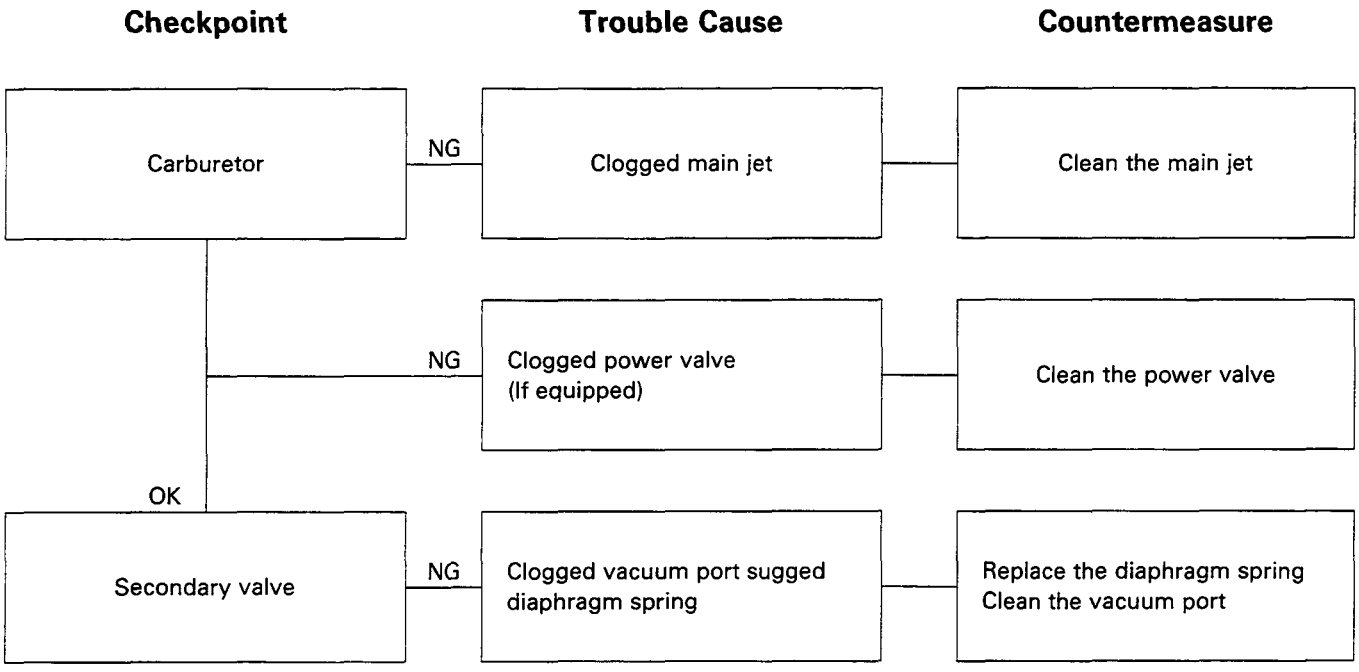

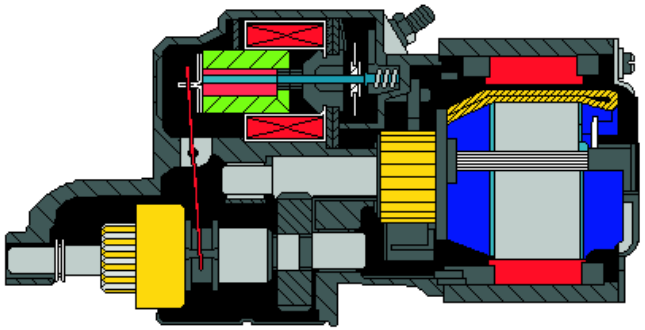

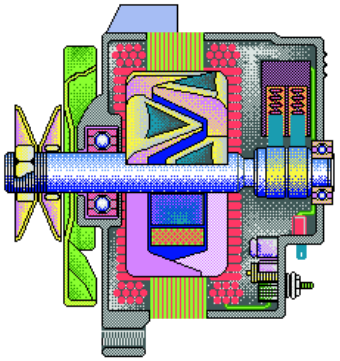

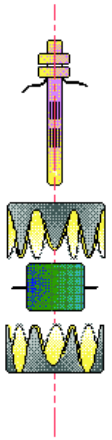

Index

Specs.

Alternator

Starter

Distributor

Coil

KB TF 140 Petrol
Engine Electrical

ISUZU

SECTION 6D

ENGINE ELECTRICAL

TABLE OF CONTENTS

PAGE

Main Data and Specifications 6D– 2
General Description 6D– 3
Torque Specifications 6D– 6
Alternator 6D– 7
  Removal and Installation 6D– 7
  Disassembly 6D– 9
  Inspection and Repair 6D–12
  Reassembly 6D–14
Starter Motor 6D–17
  Removal and Installation 6D–17
  Disassembly 6D–19
  Inspection and Repair 6D–22
  Reassembly 6D–27
Distributor 6D–30
  Removal and Installation 6D–30
  Disassembly/Reassembly (Except Switzerland, Sweden, Germany and Chili (From '92)) 6D–31
  Inspection and Repair 6D–33
  Disassembly (For Switzerland, Sweden, Germany and Chili (From '92)) 6D–35
  Inspection and Repair 6D–37
  Reassembly 6D–38
Ignition Coil 6D–41
  Removal and Installation 6D–41
Troubleshooting 6D–42

MAIN DATA AND SPECIFICATIONS

Item		Description
STARTER MOTOR		
Type		Magnet shift, Reduction type
Rated voltage	V	12
Rated out-put	kW	1.4 kW
Terminal voltage - with load	V	8
ALTERNATOR		
Type	V	Stator diode rectified
Voltage	V	12
Drive & rotation		V-belt, clockwise viewed from front
Ground polarity		Negative
Maximum out-put		
Amperameter	A	55
REGULATOR		
Type		IC regulator
DISTRIBUTOR		
Type		Full Transistor type (Contact pointless)
Ignition interval		89° - 91°
Direction of rotation		Clockwise (as viewed from capside)
SPARK PLUG		
Model		BPR6ES or BPR6ES11
Size	mm(in)	M14, P = 1.25 (0.049)
Spark gap	mm(in)	
without catalytic converter vehicle		0.7 - 0.8 (0.028 - 0.031)
with catalytic converter vehicle		1.0 - 1.1 (0.040 - 0.043)

GENERAL DESCRIPTION

ALTERNATOR

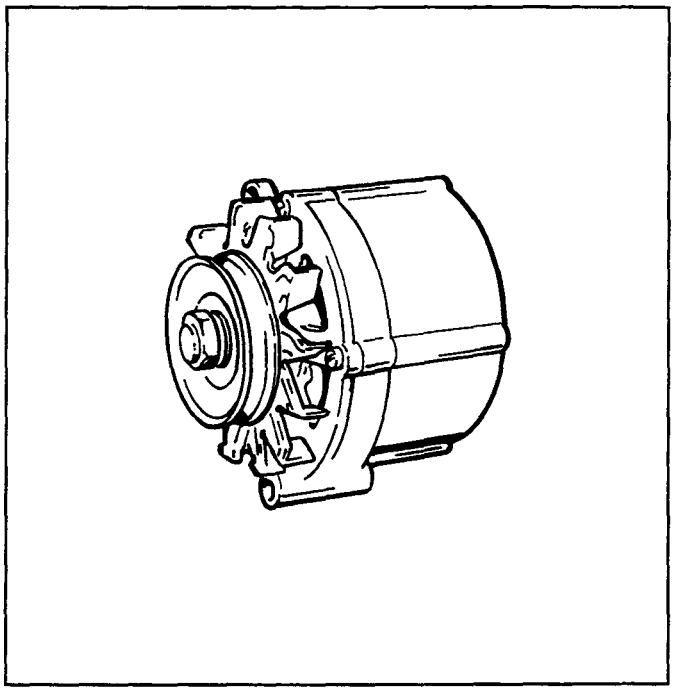

STARTER MOTOR

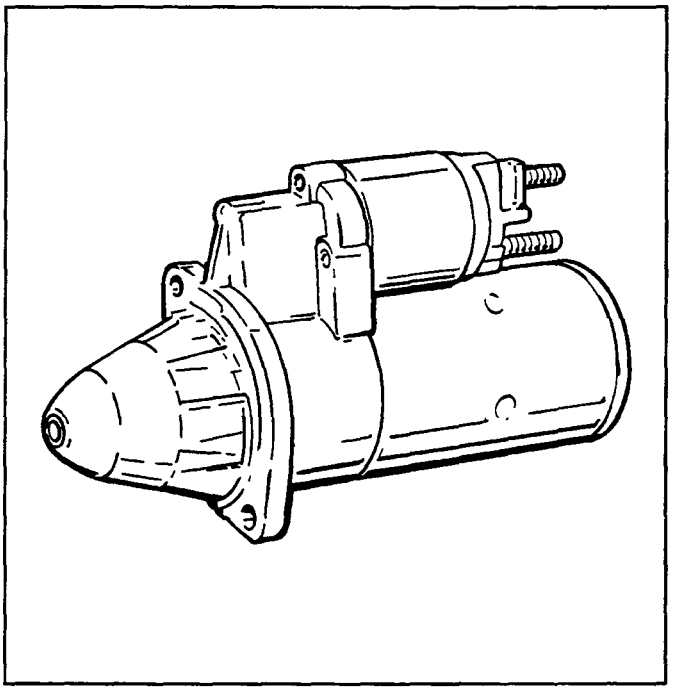

ALTERNATOR

The basic charging system is the IC integral regulator charging system.
The generator features a solid state regulator that is mounted inside the generator. All regulator components are enclosed into a solid mold, and this unit along with the brush holder assembly is attached to the slip ring end frame. The generator voltage setting cannot be adjusted.

STARTER

The starter motor circuit is composed of a 4-pole 4-brush type direct current series motor, ignition switch with safety lock, etc. The starter motor circuit utilizes negative ground polarity.
The starter engagement mechanism is of an integral type with the main switch fitted into the magnetic switch that controls shifting of the starter pinion. The pinion incorporates an overrunning clutch.

DISTRIBUTOR

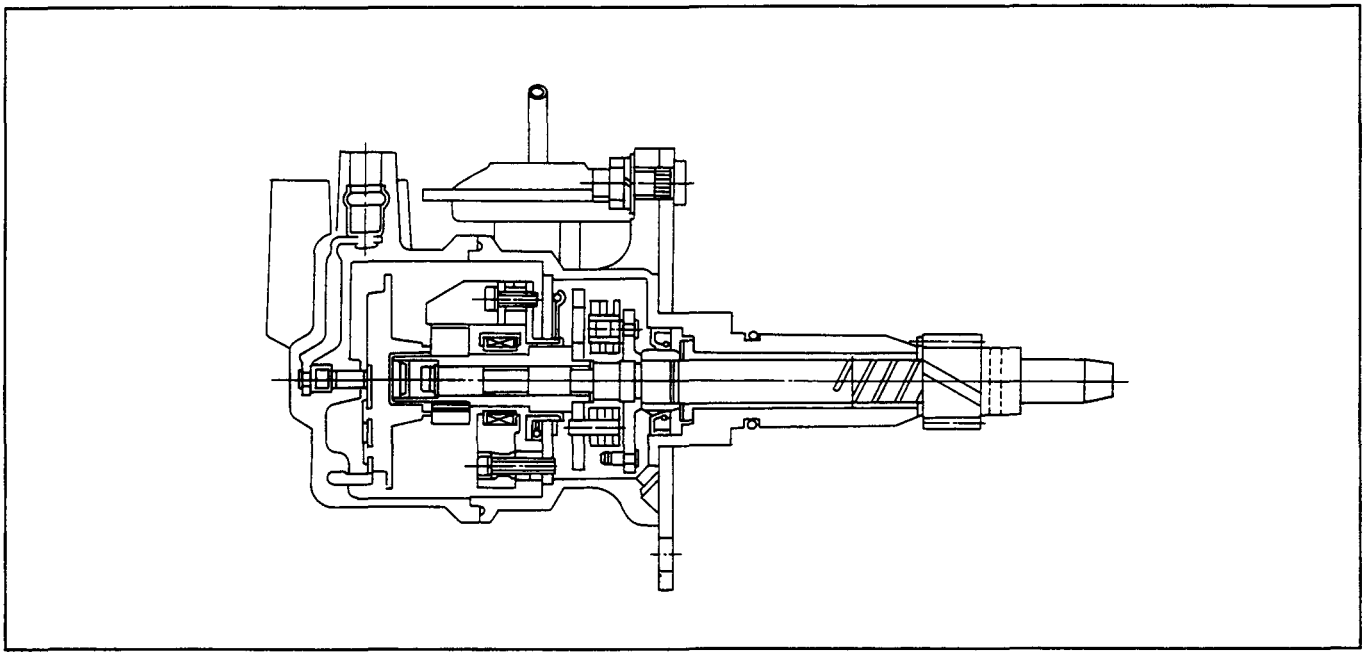

The 4Z series engine uses a full transisterized type. (Contact pointless type).

The distributor consists of the distributor shaft, the rotor shaft, the rotor head, the breaker assembly, the reluctor, the governor flyweight, the pinion gear, and the vacuum control.

CHARGING CIRCUIT DIAGRAM

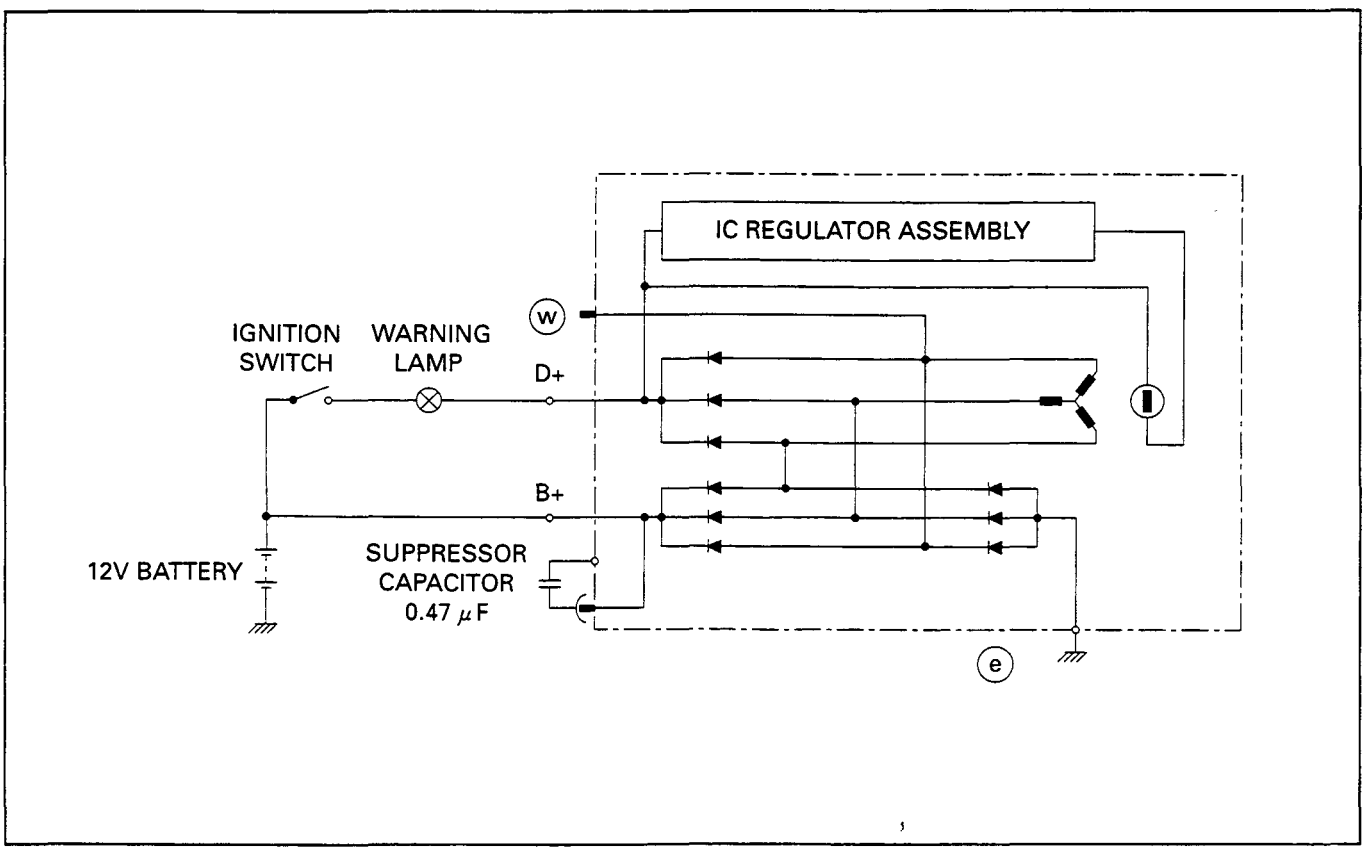

IGNITION CIRCUIT

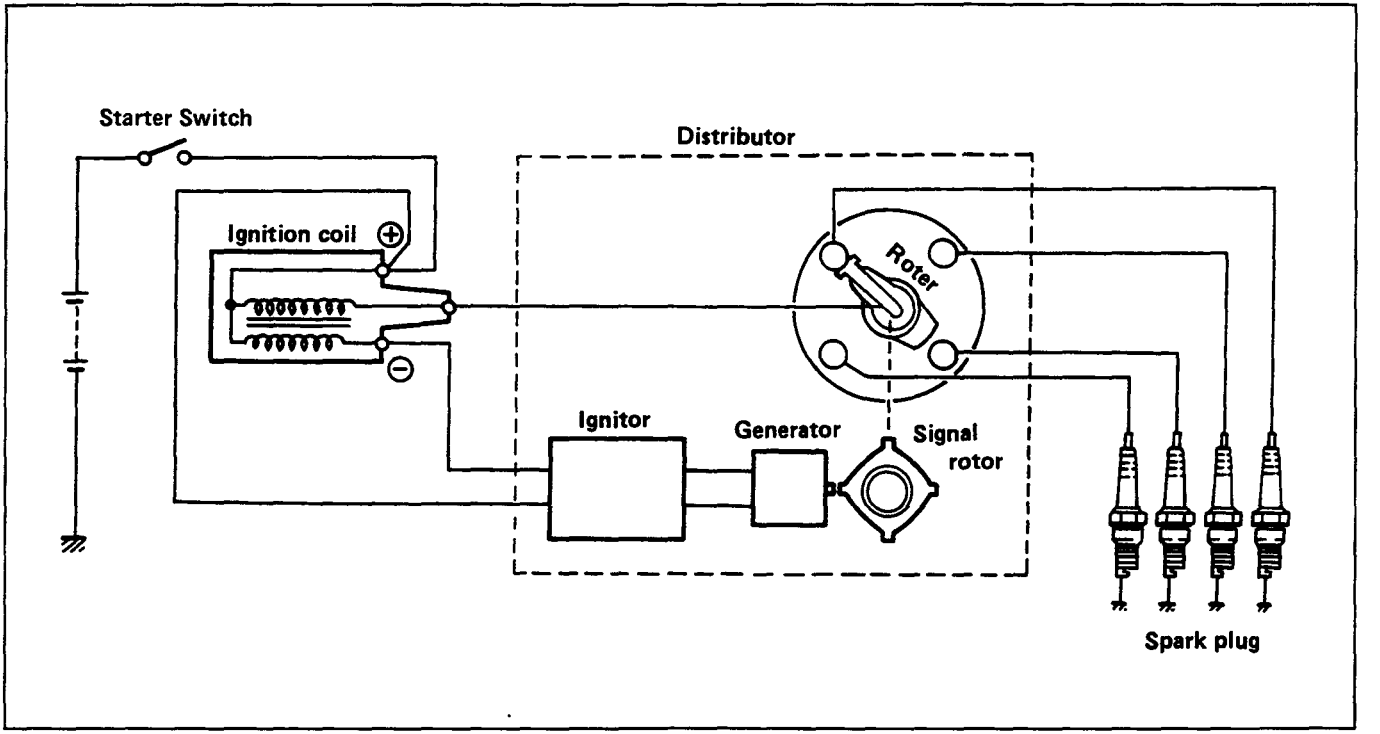

TORQUE SPECIFICATIONS

ALTERNATOR

N•m

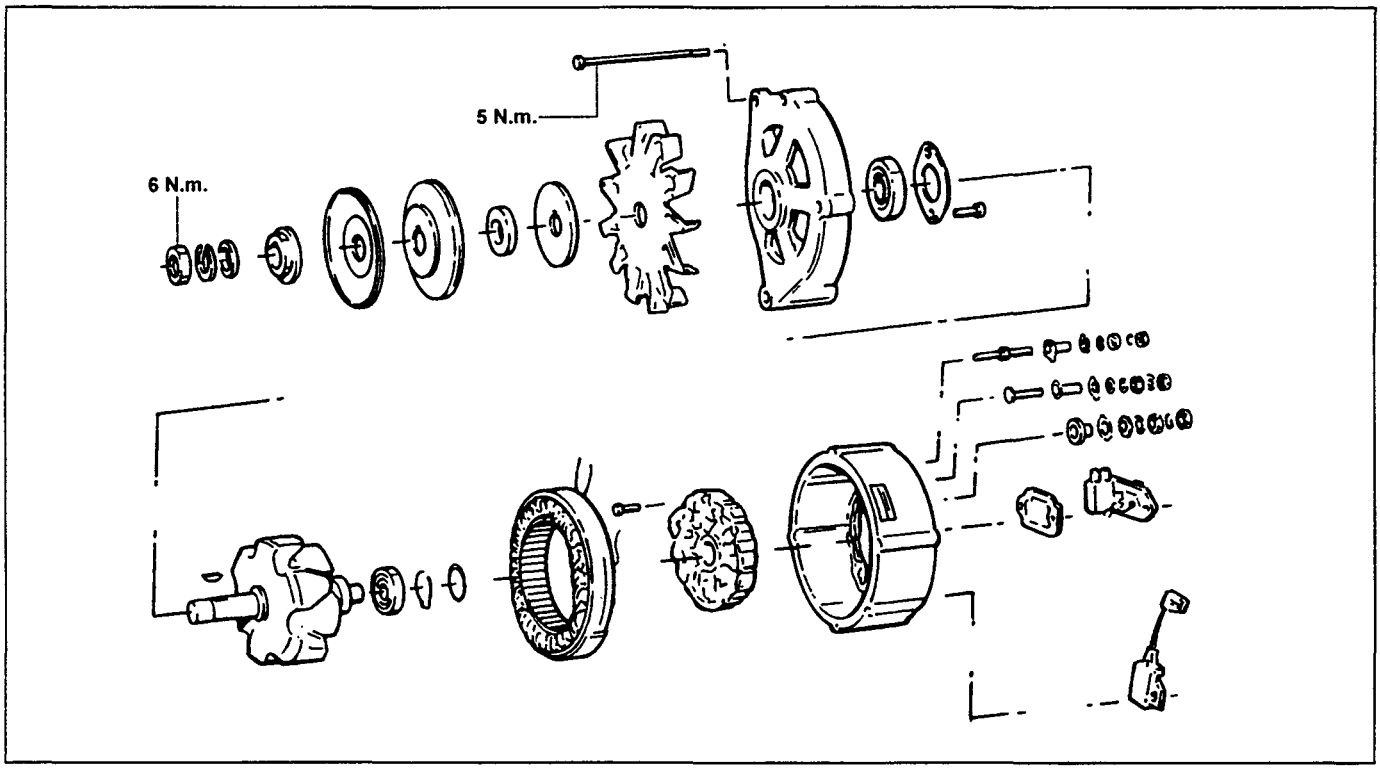

STARTER MOTOR

N•m

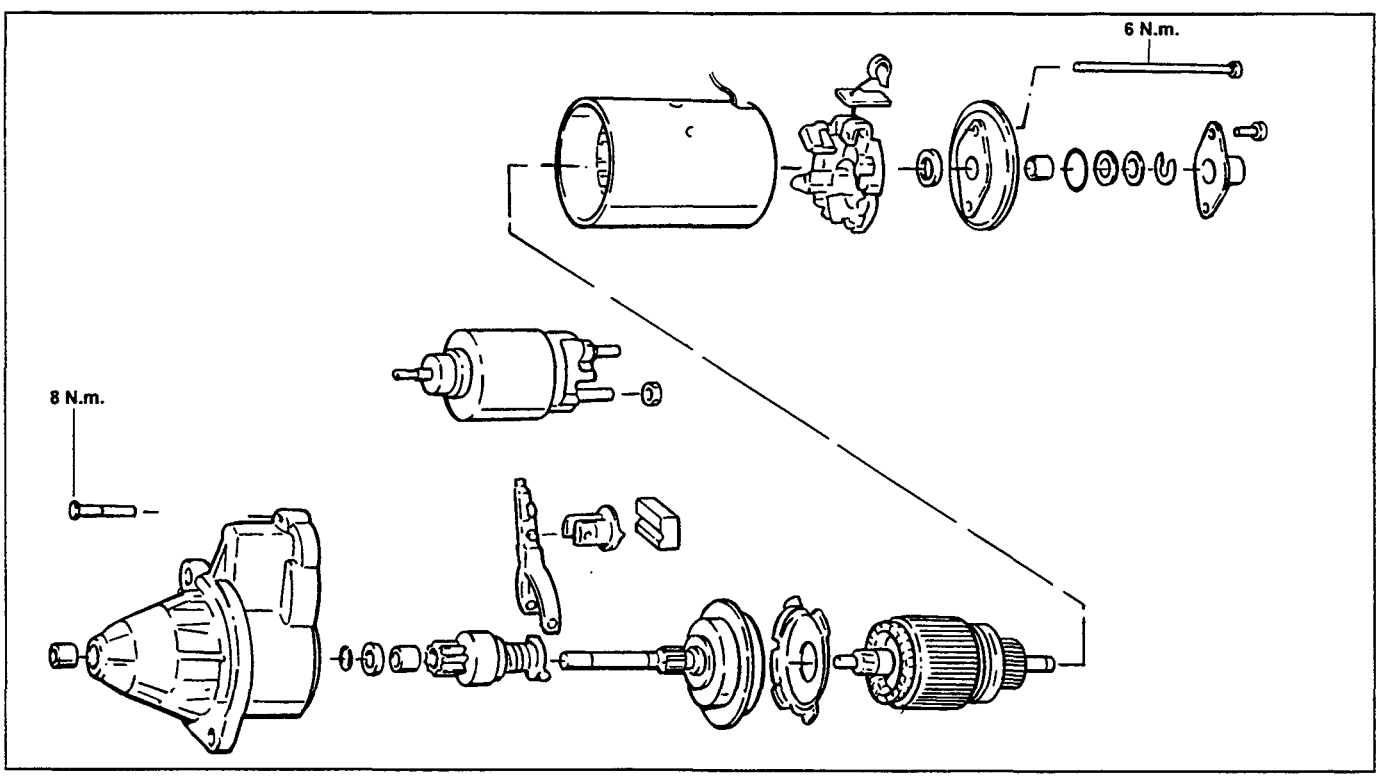

ALTERNATOR

REMOVAL AND INSTALLATION

Read this Section carefully before performing any removal and installation procedure. This Section gives you important points as well as the order of operation. Be sure that you understand everything in this Section before you begin.

Important Operations – Removal

Use a circuit tester to inspect the charging circuit before removal.

Refer to "INSPECTION AND REPAIR" "CHARGING CIRCUIT ON THE VEHICLE".

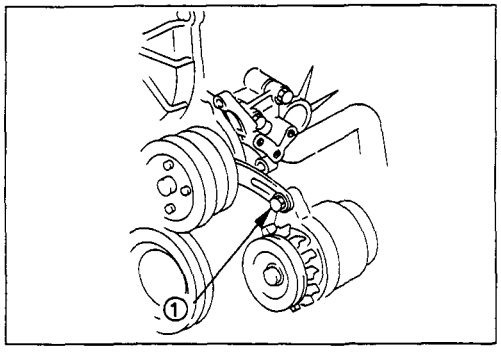

▲ Cooling Fan Belt

1) Loosen and remove the fan belt adjusting plate bolts ①.
2) Remove the fan belt from the alternator drive pulley.

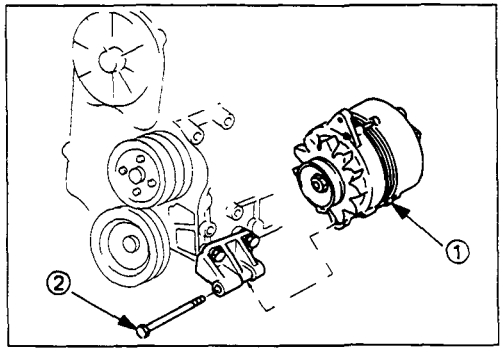

▲ Alternator

Remove the alternator bolt ① and the alternator ② from the bracket.

Important Operations – Installation

Follow the removal procedure in the reverse order to perform the installation procedure. Pay careful attention to the important points during the installation procedure.

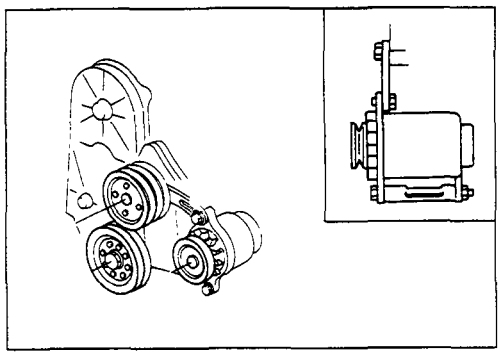

▲ Alternator

1. Install the alternator to the bracket.
2. Tighten the alternator bolt to the specified torque.

Alternator Bolt Torque	kg·m(lb.ft/N·m)
3.8 ± 1.0 (27.5 ± 7.2/37.2 ± 9.8)	

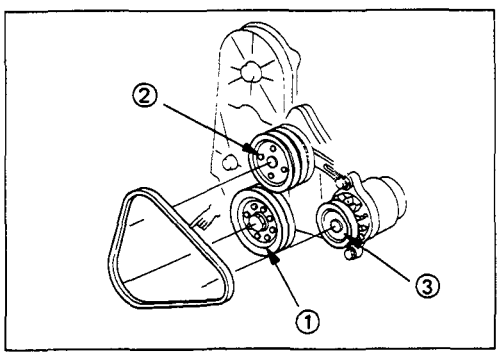

▲ Cooling Fan Belt

1) Hold the alternator toward the engine.
2) Install the fan belt to the three pulleys.
   ① Crankshaft pulley
   ② Water pump pulley
   ③ Alternator pulley

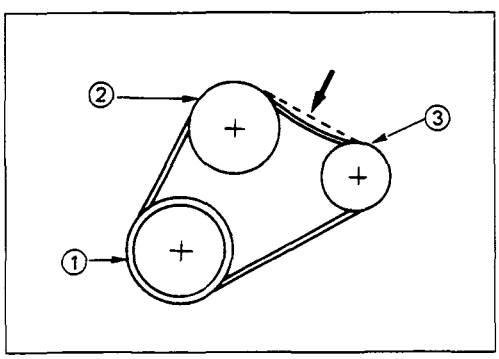

3) Adjust the fan belt tension.
   ① Use a bar to pull the alternator away from the engine as far as possible.
   ② Use your hand to apply a pressure of 10 kg (22 lb/98 N) to the area of the fan belt indicated by the arrow in the illustration.

   There should be from 8 – 12 mm (0.31 – 0.47 in) of belt deflection.

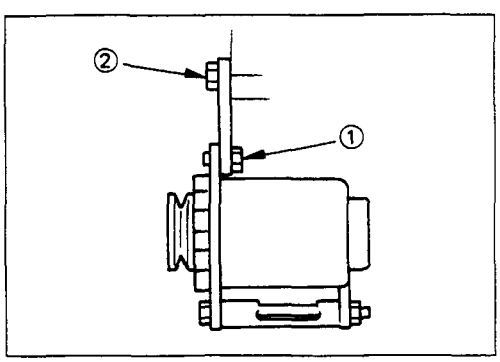

4) Tighten the adjusting plate bolts to the specified torque a little at a time in the numerical order shown in the illustration.

Adjusting Plate Bolt Torque	kg·m(lb.ft/N·m)
1.9 ± 0.5 (13.7 ± 3.6/18.6 ± 4.9)	

ALTERNATOR

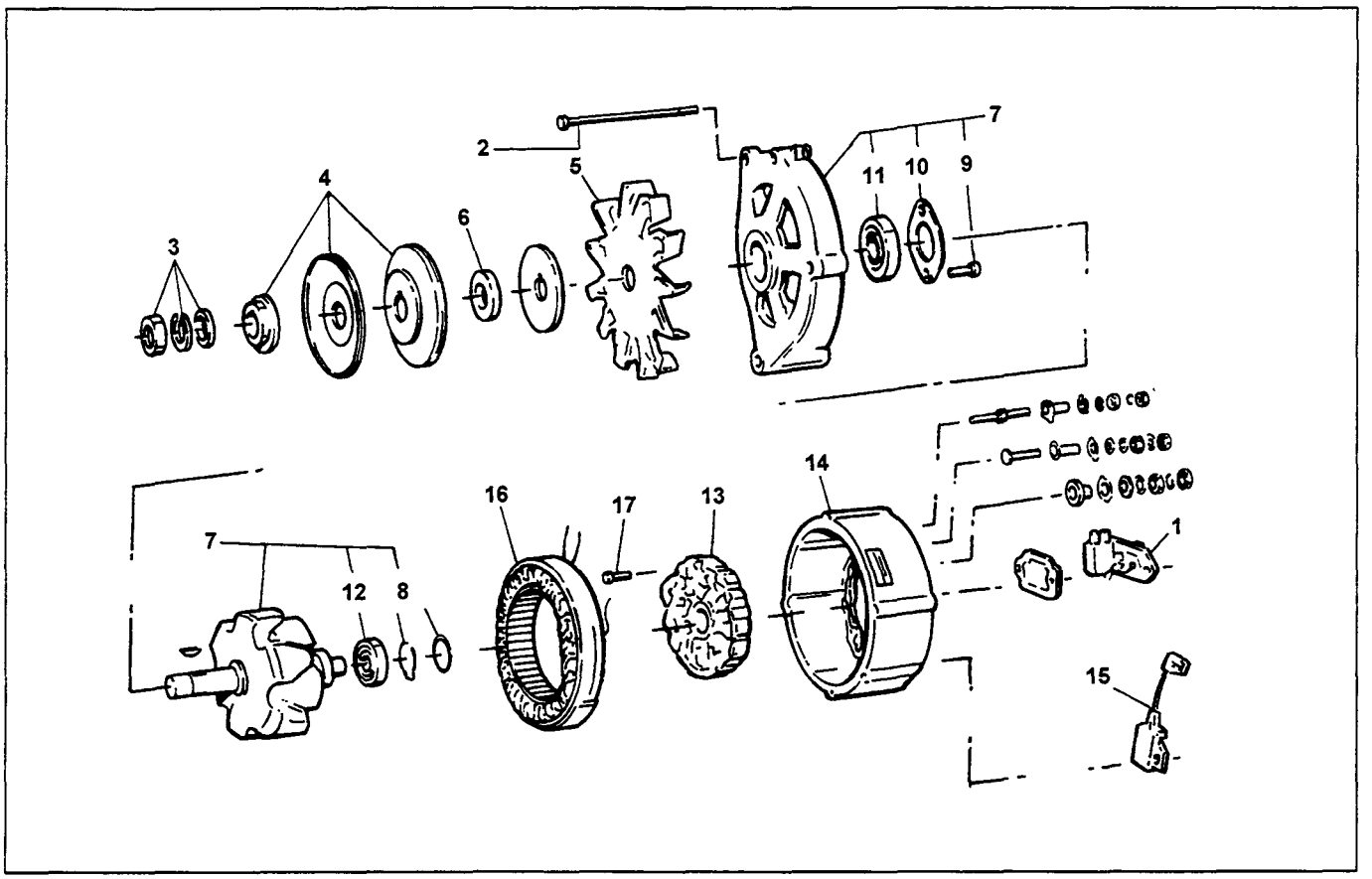

Disassembly Steps

1. Blush and EE regulator
2. Through bolt
3. Pulley nut, cup and washer
4. Pulley
5. Fan
6. Spacer
7. Rotor assembly
8. Wave washers
9. Screw
10. Bearing retainer
11. Front bearing
12. Rear bearing
13. Front cover
14. Rear cover
15. Condenser
16. Stator
17. Battery terminal
18. Diode bridge

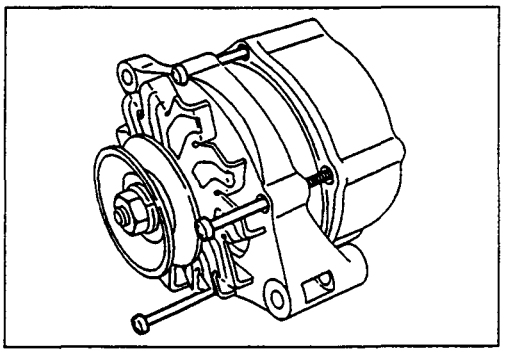

DISASSEMBLY

1. **Blush and EE regulator**
2. **Through Bolt**
   - Remove the through bolt.
   - Insert the tip of a pry bar into the gaps between the front cover and the stator core. Pry apart and separate the front cover and rotor and the rear cover and stator.

CAUTION:
Take care not to scratch or otherwise damage the stator coil with pry bar.

3. **Pulley Nut Clip and Washer**
4. **Pulley**
5. **Fan**
6. **Spacer**
7. **Rotor Assembly**
   - Remove the rotor assembly from front cover.
8. **Wave Washers**
9. **Screw**
10. **Bearing Retainer**
11. **Front Bearing**
12. **Rear Bearing**
13. **Front Cover**

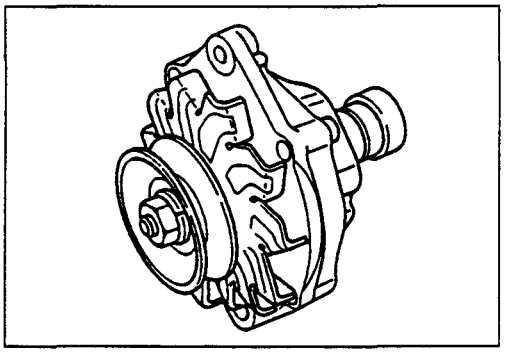

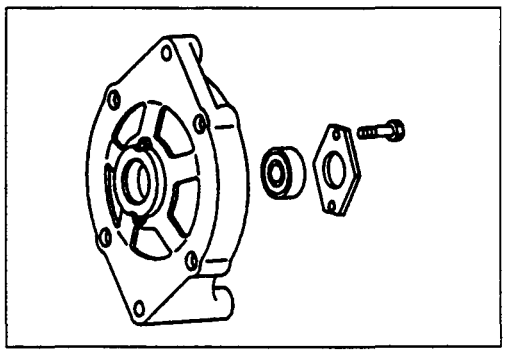

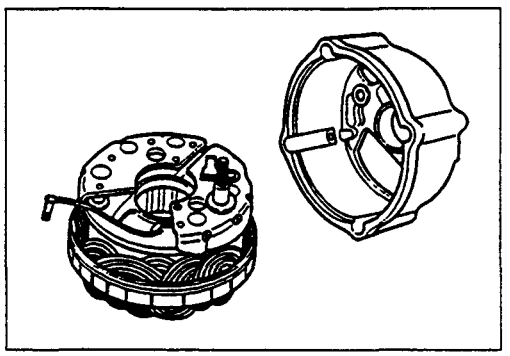

14. **Rear Cover**
    - Remove the three retaining screws and the BAT terminal
    - Separate the rear cover from the stator.
17. **Condenser**

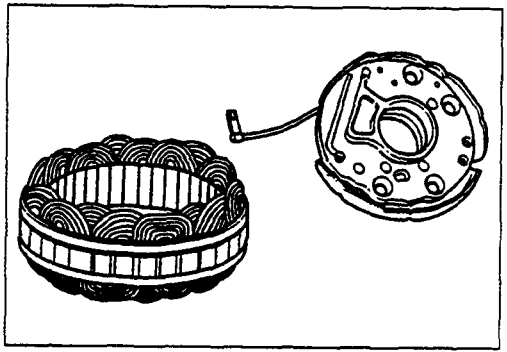

16. Stator

- Cut the diode soldering points, then remove the stator.

17. Battery Terminal

18. Diode Bridge

INSPECTION AND REPAIR

Make the necessary adjustments, repairs, and part replacements if excessive wear or damage is discovered during inspection.

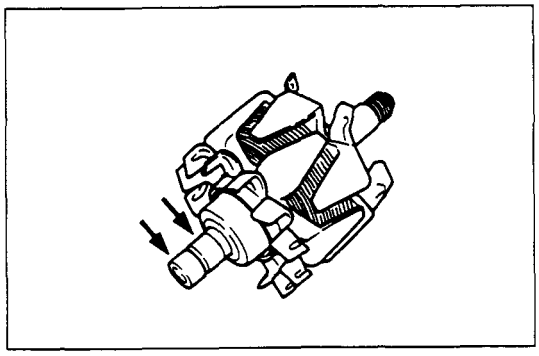

ROTOR ASSEMBLY

1. Inspection the slip ring faces for dirt and pitting.
   Wipe away any dirt with a clean cloth soaked in alcohol.
   Use a hand grinder to remove pitting.
2. Measure the slip ring diameter.
   If the slip ring diameter is less than the specified limit, the slip rings must be replaced.

Slip Ring Diameter — mm(in)

Standard	Limit
27.0 (1.063)	26.0 (1.024)

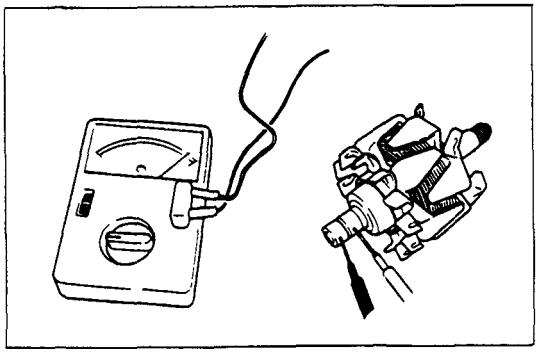

3. Measure the rotor coil resistance.

Rotor Coil Resistance at 20°C (68°F) — Ohms

Standard
2.69

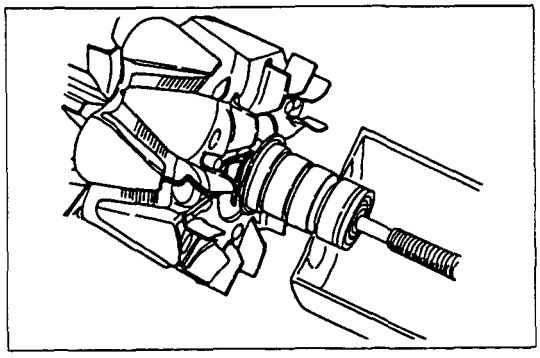

4. Check for continuity between the slip rings and the rotor core or shaft.
   If there is continuity, the entire rotor assembly must be replaced.

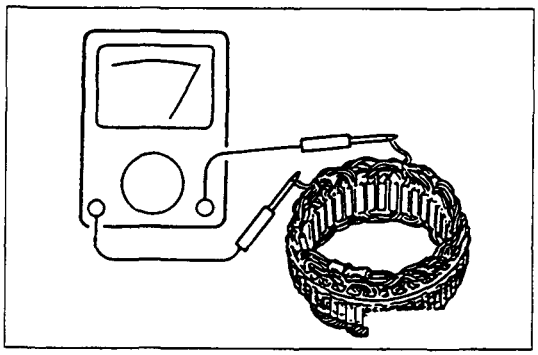

STATOR COIL ASSEMBLY

1. Check for continuity across the stator coils.

   If there is no continuity, the stator coils must be replaced.

Resistance Between The Terminal "N" and The Coil Ends (Reference)	Ohms
Standard	
0.14	

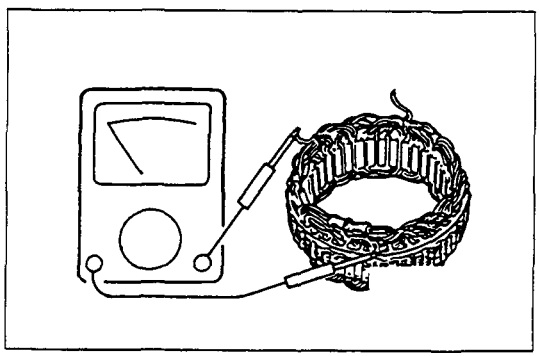

2. Check for continuity between each stator coils and the stator core.

   If there is continuity, the stator coils must be replaced.

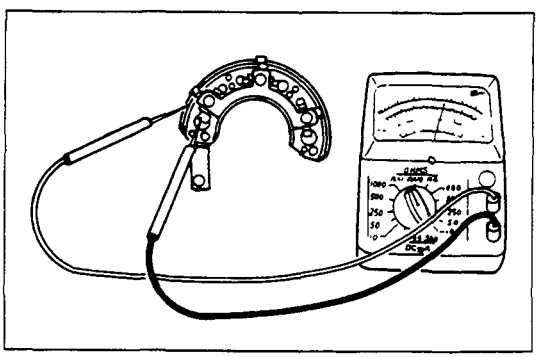

DIODE

1. Measure the resistance between each diode terminal and holder in forward and reverse directions with the connection of the tester leads switched. The diodes are normal if resistance is nearly zero ohms in one direction and is infinitely high in the other direction.
2. If a diode has no resistance or equal resistance in both directions, it is defective and should be replaced together with the holder.

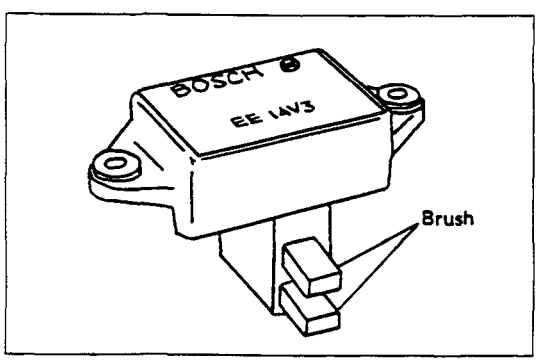

BRUSH

1. Measure the brush length.
2. If the measured brush length is less than 5.5 mm, the brush and the brush holder assembly must be replaced.

   There is a minimum brush length limit line stamped into the brush.

Length	mm(in)
Limit	
3.8 (0.150)	

3. Brush soldering precautions.
   - Be sure to use 60/40 resin cored solder.

ALTERNATOR

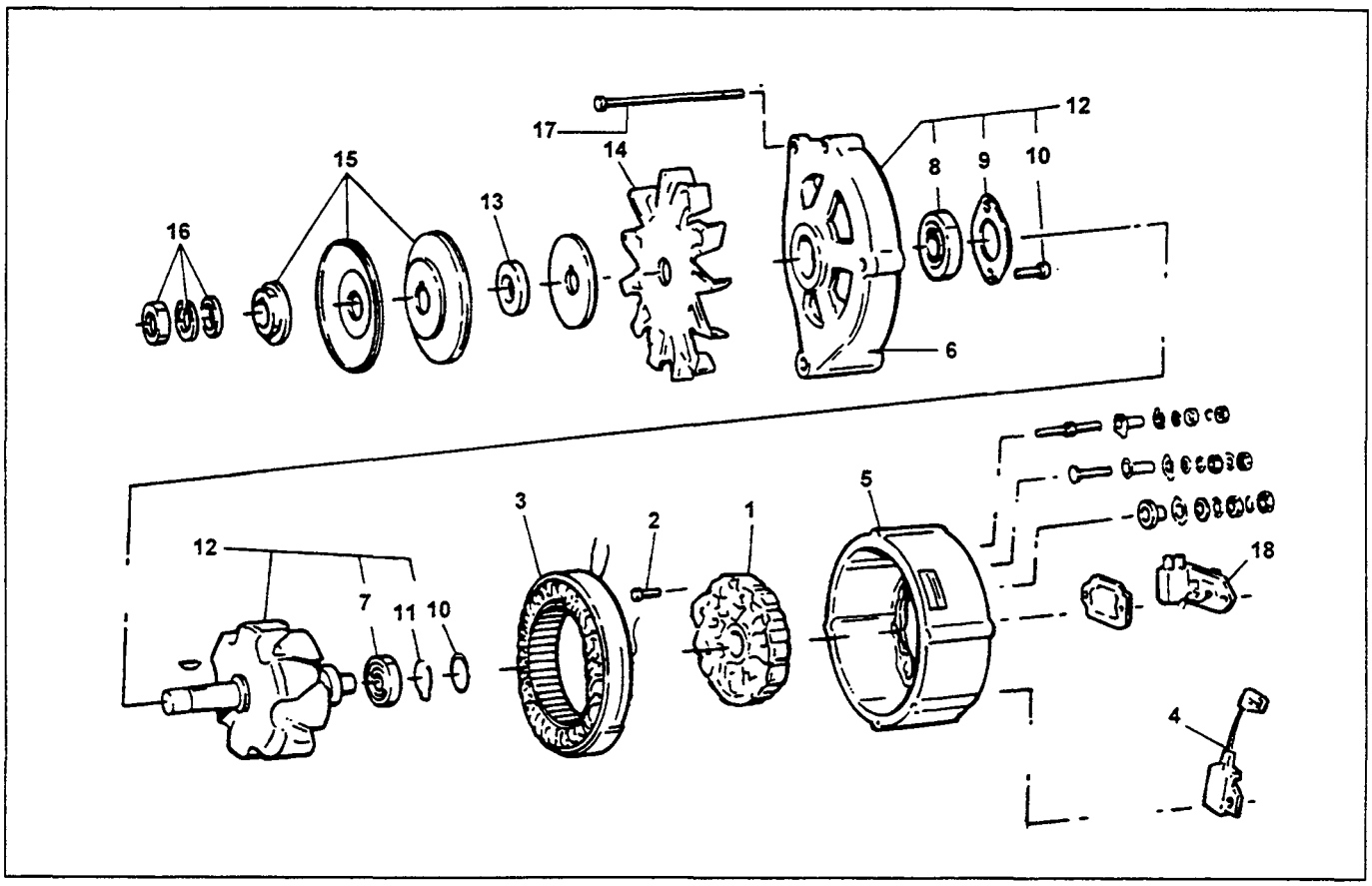

Reassembly Steps

▲ 1. Diode bridge
2. Battery terminal
▲ 3. Stator
4. Condenser
5. Rear cover
6. Front cover
7. Rear bearing
8. Front bearing
9. Bearing retainer
10. Screw
11. Wave washers
▲ 12. Rotor assembly
13. Spacer
14. Fan
15. Pulley
16. Pulley nut, clip and washer
17. Through bolt
18. Blush and EE regulator

Important Operations

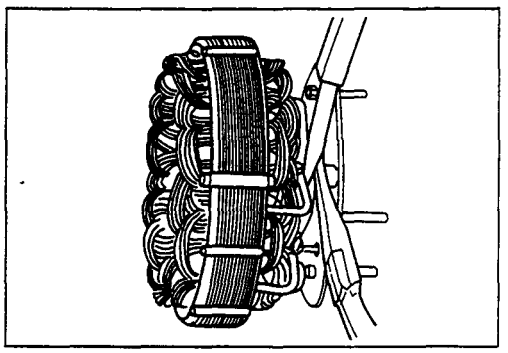

1. Diode Bridge
3. Stator

1) Solder together the rectifier and stator leads.
   Hold the diode lead near the rectifier with a pair of long-nose pliers to protect the rectifier from heat.
   Complete the soldering procedure as quickly as possible.

2) Install the rectifier/stator assemblies to the rear cover.
   Be absolutely sure that the washers and the insulators are reinstalled to their original positions.
   Hold the stator coil against the rear cover.
   Do not allow the stator coil to fall free.

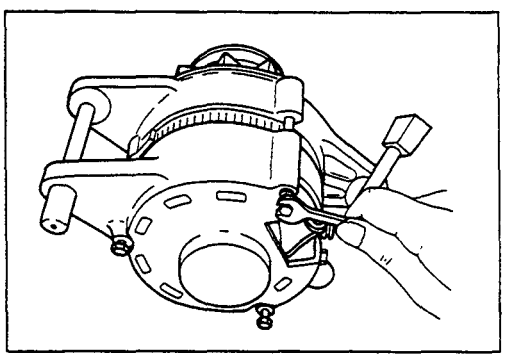

12. Rotor Assembly with Rear Bearing
17. Through Bolt

1) Install the front cover and rotor assembly to the rear cover.
   Take care not to damage the rotor, the coil leads, and the coil seal lip, and the splines.
2) Place the guide bar to the rear cover bracket hole.
3) Align the front cover bracket hole with the guide bar.
   Install the through bolt.
4) Tighten the through bolts to the specified torque.

Through Bolt Torque	N•m
5.0	

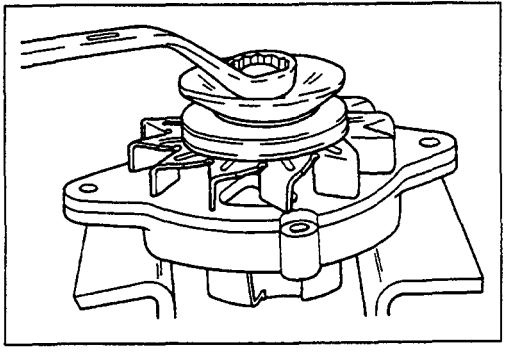

15. Pulley

16. Pulley Nut and Washer

1) Carefully clamp the rotor in a vise.
2) Install the pulley and the pulley nut.
3) Tighten the pulley to the specified torque.

Pulley Nut Torque	N•m
6	

Note:

Take care not to damage the rotor when clamping it in the vise.

STARTER MOTOR

REMOVAL AND INSTALLATION

Read this Section carefully before performing any removal and installation procedure. This Section gives you important points as well as the order of operation. Be sure that you understand everything in this Section before you begin.

Important Operations - Removal

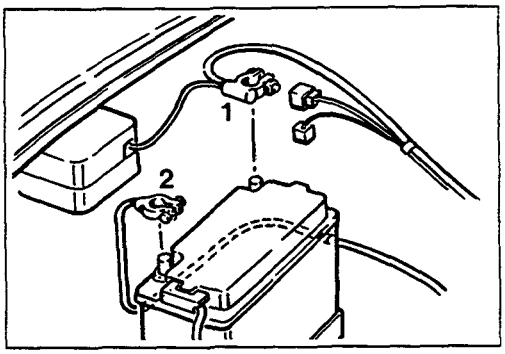

▲ **Starter Motor**

▲ **Magnetic Switch Cable**

1. Disconnect the battery cable (1) and the grounding cable (2) from the battery terminals.
2. Disconnect the magnetic switch cable from the terminal bolts.
3. Disconnect the battery cable at the starter motor and the ground cable at the cylinder body.
4. Remove the starter motor from the engine.

Important Operations - Installation

Follow the removal procedure in the reverse order to perform the installation procedure. Pay careful attention to the important points during the installation procedure.

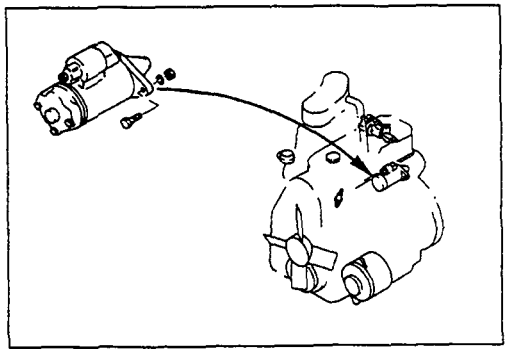

▲ **Starter Motor**

1. Install the starter motor to the rear plate.
2. Tighten the starter motor bolts to the specified torque.

Starter Motor Bolt Torque	kg•m(lb.ft/N•m)
8.8 ± 1.9 (63.6 ± 16.6/86.2 ± 18.6)	

3. Reconnect the battery cable at the starter motor and the grounding cable at the cylinder body.

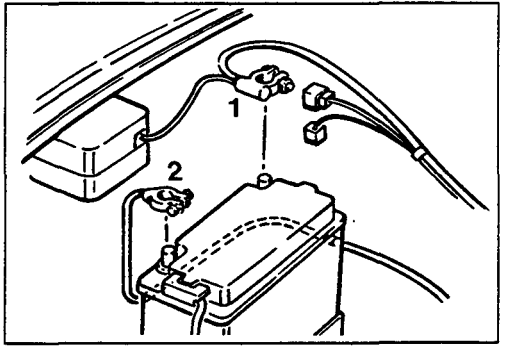

4. Reconnect the battery cable (1) and the grounding cable (2).

STARTER MOTOR

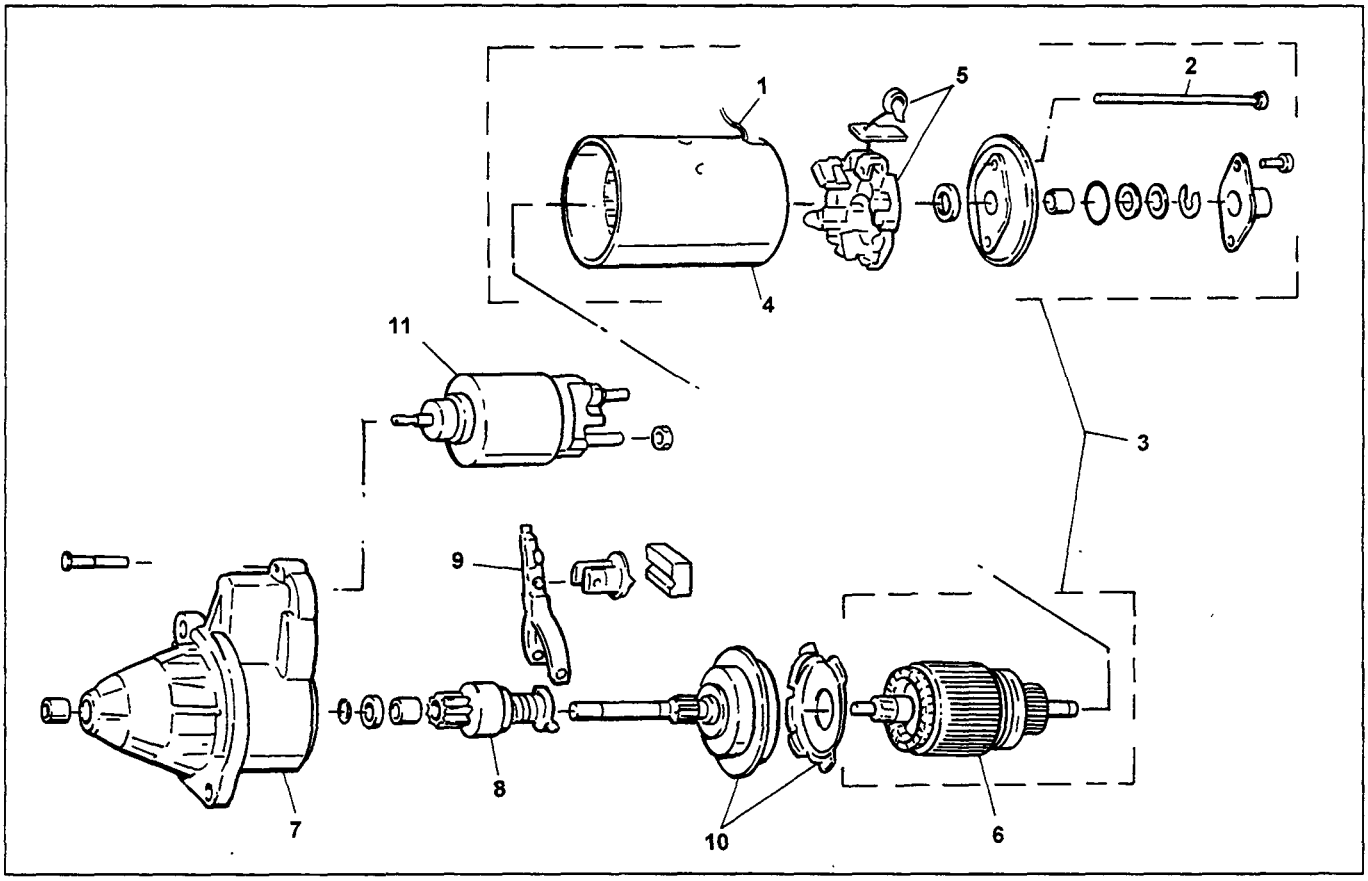

Disassembly Steps

- ▲ 1. Lead wire
- 2. Through bolt
- ▲ 3. Yoke assembly
- 4. Field coil
- ▲ 5. Brush and brush holder
- ▲ 6. Armature
- ▲ 7. Drive side housing
- 8. Bendix drive
- 9. Fork lever
- 10. Planet gear set
- 11. Solenoid

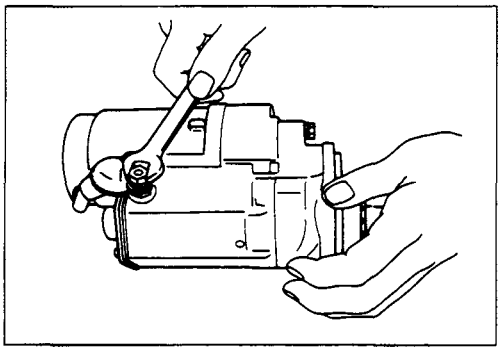

Important Operations

1. Lead Wire

Disconnect the lead wire at the magnetic switch.

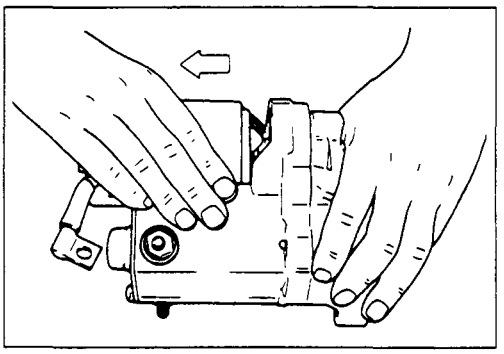

3. Yoke Assembly

Pull the magnetic switch from the yoke.

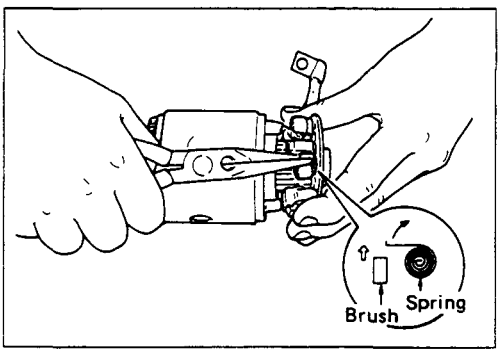

5. Brush and Brush Holder

1) Use a pair of long-nose pliers to compress the spring end.

   Remove the brushes from the yoke.

2) Remove the brush holder from the yoke.

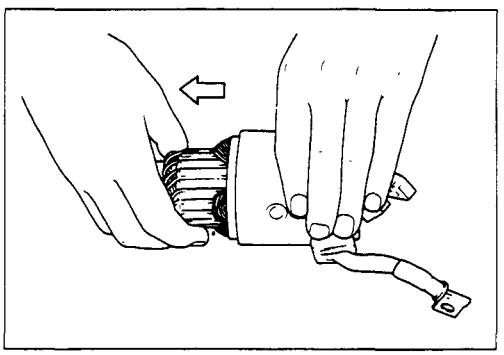

6. Armature

Tap on the yoke end with a soft mallet to remove the armature from the yoke.

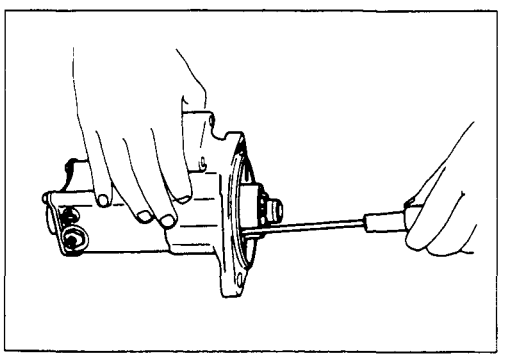

7. Drive Side Housing

1) Remove the two screws from the drive housing.
2) Pull the drive housing from the magnetic switch.

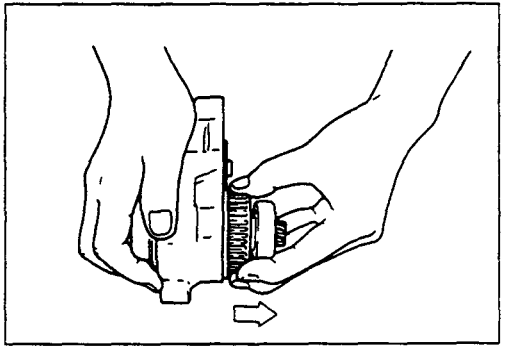

8. Bendix Drive

Remove the Bendix Drive from the drive side housing.

INSPECTION AND REPAIR

Make necessary correction or parts replacement if wear, damage or any other abnormal condition is found through inspection.

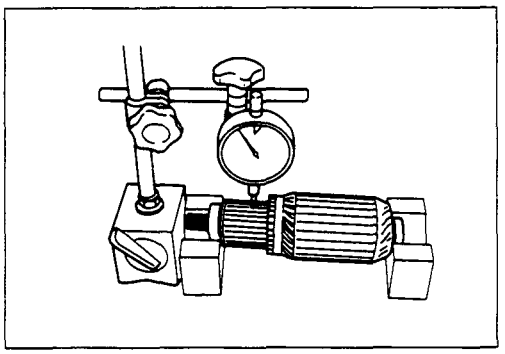

ARMATURE

1. Measure the commutator run-out.

   Replace the commutator if the measured run-out exceeds the specified limit.

Commutator Run-out mm(in)

Standard	Limit
0.02 (0.0008)	0.05 (0.0020)

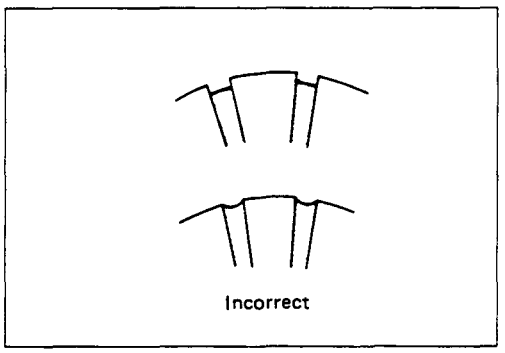

2. Check the commutator mica segments for excessive wear.
3. Measure the mica segment depth.

Mica Segment Depth mm(in)

Standard	Limit
0.5—0.8 (0.028—0.035)	0.2 (0.008)

If the mica segment depth is less than the standard but more than the limit, the commutator may be reground.

If the mica segment depth is less than the limit, the commutator must be replaced.

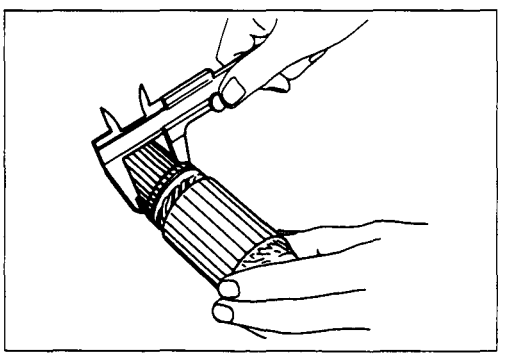

4. Measure the commutator outside diameter.

Commutator Outside Diameter mm(in)

Standard	Limit
35 (1.378)	34 (1.339)

If the measured outside diameter is less than the specified limit, the commutator must be replaced.

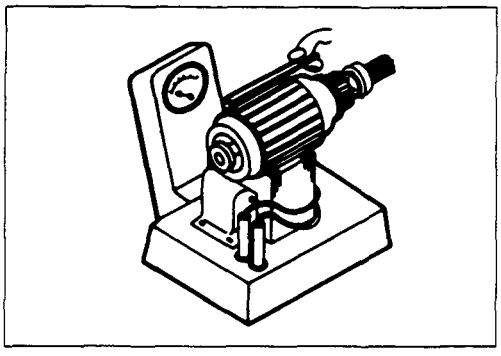

5. Test the armature for short circuiting.
   1) Place the armature in a growler tester.
   2) Hold a hacksaw blade against the armature core.

      Slowly rotate the armature.

      If the armature has a short circuit, the hacksaw blade will vibrate.

      Replace the armature if there is a short circuit.

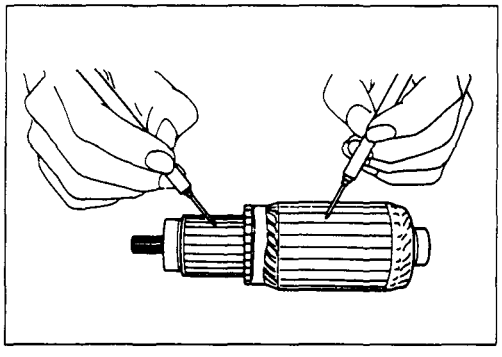

6. Use a circuit tester to check the armature for grounding.
   1) Hold one probe of the circuit tester against the commutator segment.
   2) Hold the other circuit tester probe against the armature core.

      If the circuit tester indicates continuity, the armature is grounded.

      The armature must be replaced.

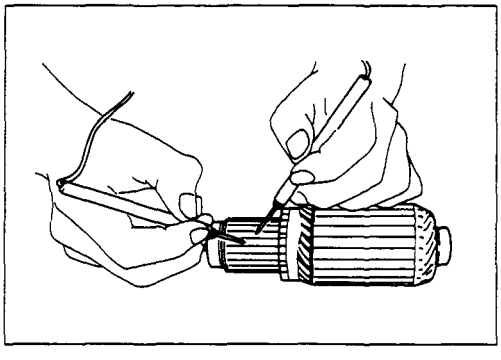

7. Use the circuit tester to check the armature for continuity.
   1) Hold the circuit tester probes against two armature core segments.
   2) Repeat Step 1 at different segments of the armature core.

      There should be continuity between all segments of the armature core.

      If there is not, the armature must be replaced.

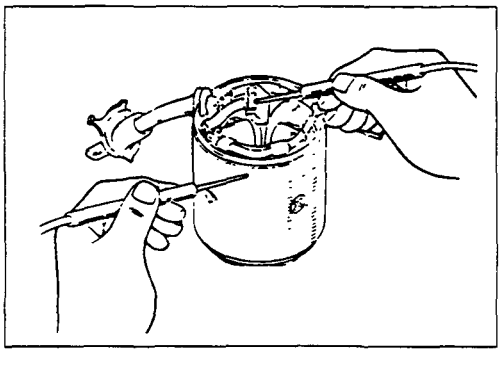

YOKE

1. Use a circuit tester to check the field winding ground.
   1) Hold one circuit tester probe against the field winding end or brush.
   2) Hold the other circuit tester probe against the bare surface of the yoke body.

      There should be no continuity.

      If there is continuity, the field coil is grounded.

      The yoke must be replaced.

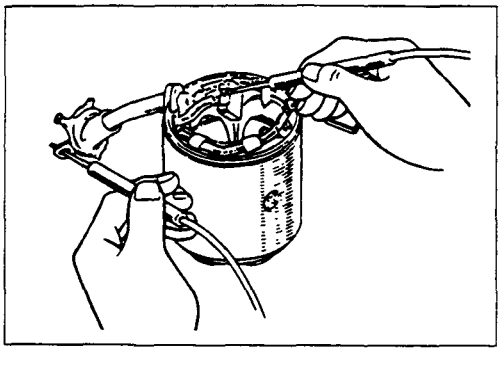

2. Use the circuit tester to check the field winding continuity.
   1) Hold one circuit tester probe against the "C" terminal lead wire.
   2) Hold the other circuit tester probe against the field winding brush.

      There should be continuity.

      If there is no continuity, the yoke must be replaced.

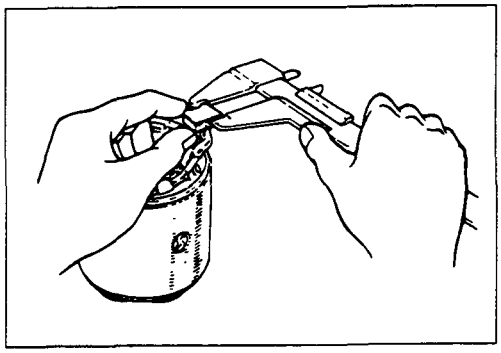

BRUSH AND BRUSH HOLDER

1. Use a vernier caliper to measure the brush length (four brushes).

   Replace the brushes as a set if one or more of the brush lengths is less than the specified limit.

Brush Length mm(in)

	Standard	Limit
Other	15.0 (0.590)	10.0 (0.394)

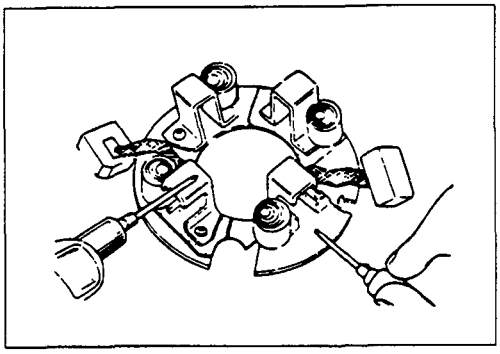

2. Use a circuit tester to check the brush holder insulation.

   Touch one probe to the holder plate and the other probe to the positive brush holder.

   There should be no continuity.

3. Inspect the brushes for excessive wear.

   If the negative brushes have excessive wear, the entire brush holder assembly must be replaced.

   If the positive brushes have excessive wear, only the brushes must be replaced.

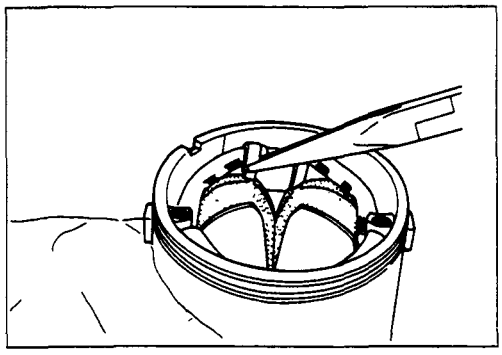

Brush Replacement

Brush Removal

1. Use a pair of side cutters to cut the lead wire from the brush.
2. File away any foreign matter clinging to the edge of the lead wire.
3. Remove the brushes from the brush holder.

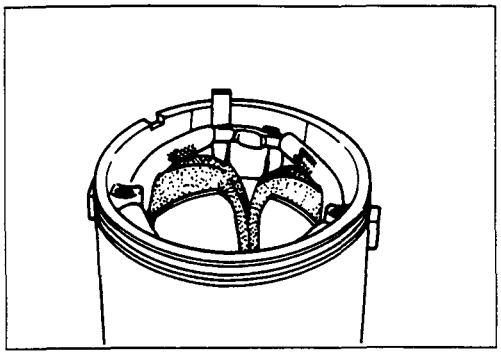

Brush Installation

1. Install the new brushes.
2. Straighten the bent portion of the clip.
3. File away any foreign matter clinging to the clip surface.

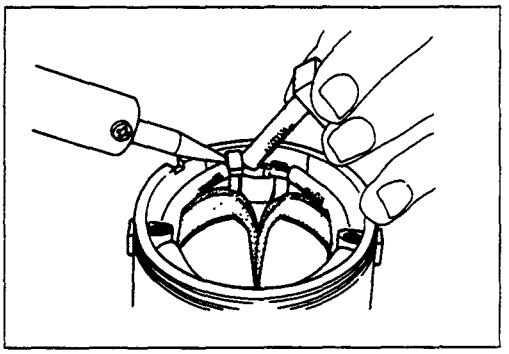

4. Place the lead wire in the clip.
5. Bend the clip shut.
6. Solder the brush lead.
7. Repeat the procedure for each of the brushes.

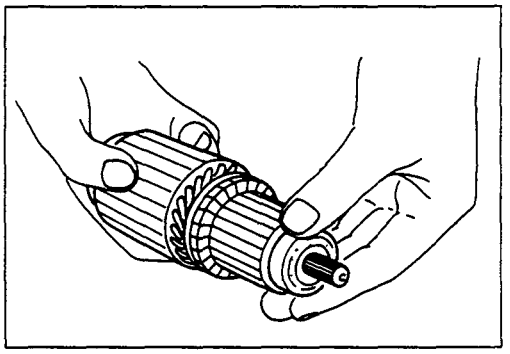

BEARING

Inspect the bearings for excessive wear and damage. Replace the bearings if necessary.

MAGNET SWITCH

The following tests must be performed with the starter motor fully assembled.

The yoke lead wire must be disconnected from the "C" terminal.

To prevent coil burning, complete each test as quickly as possible (within three to five seconds).

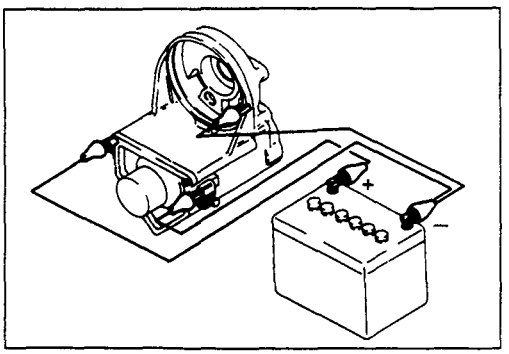

Pull-Out Test

1. Connect the battery negative test leads to the starter motor body and the "C" terminal.
2. Touch the battery positive test lead to the "50" terminal. If the magnetic switch function is satisfactory, there will be a strong magnetic force moving the pinion away from its home position.

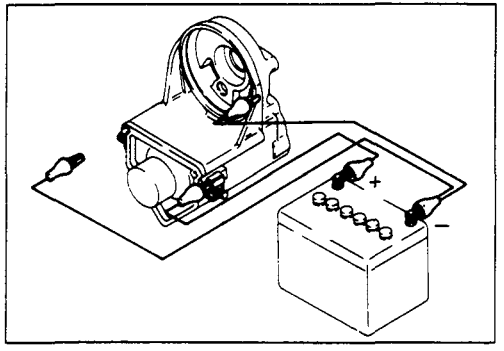

Hold-In Test

1. Connect the battery negative test lead to the starter motor body.
2. Touch the battery positive test lead to the "50" terminal.

   If the magnetic switch function is satisfactory, there will be a strong magnetic force moving the pinion away from its home position.

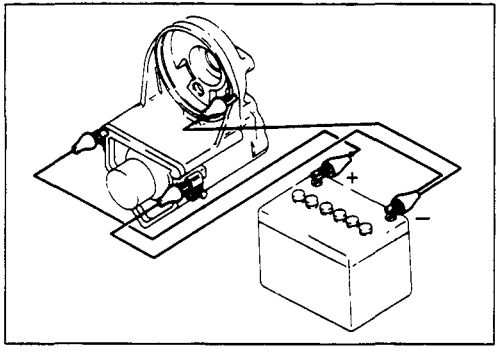

Return Test

1. Connect the battery negative test lead to the starter motor body and the "50" terminal.
2. Touch the battery positive test lead to the "C" terminal.

   If the magnetic switch function is satisfactory, there will be a strong magnetic force moving the pinion toward its home position.

STARTER MOTOR

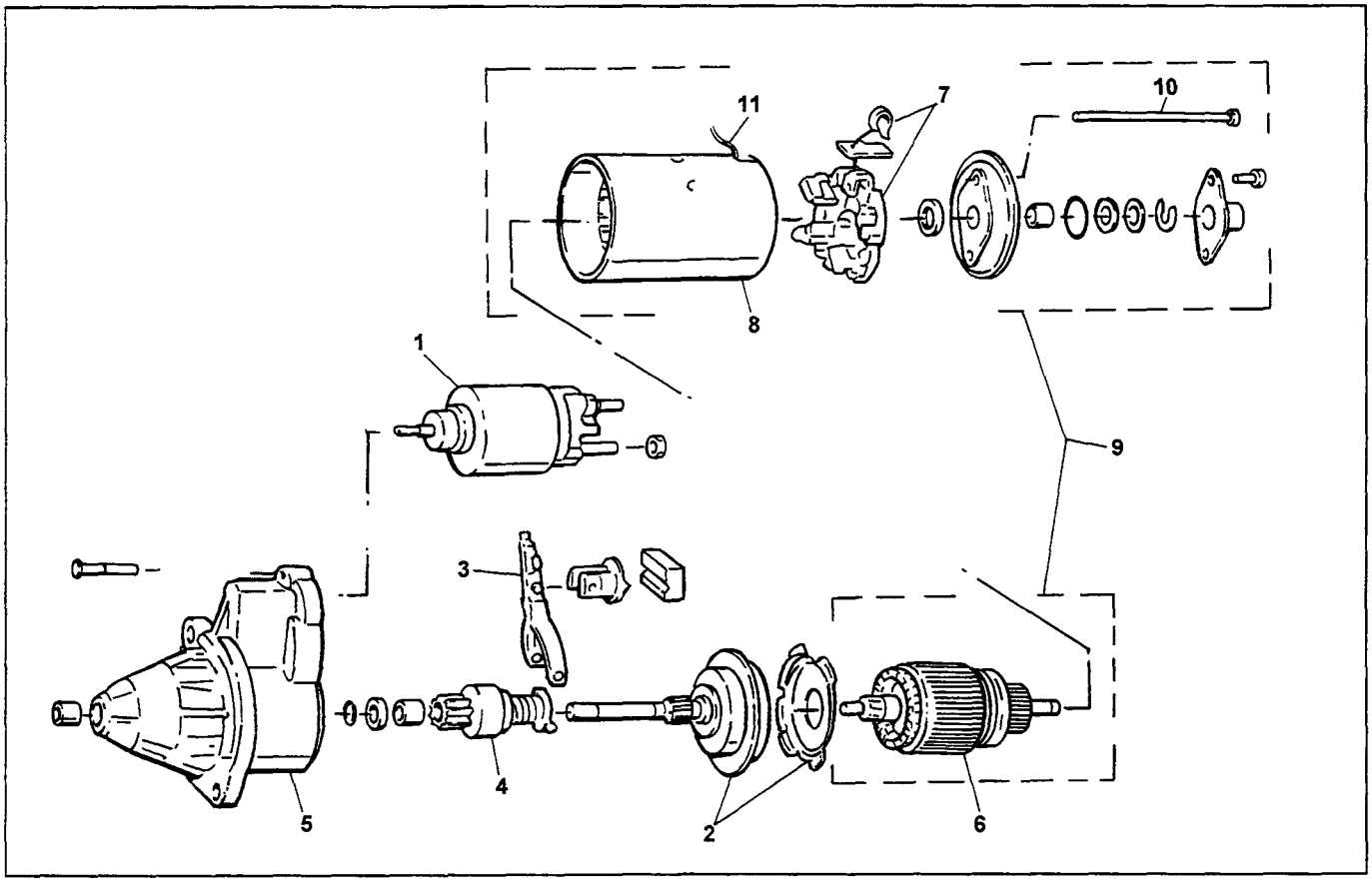

Reassembly Steps

1. Solenoid
2. Planet gear set
3. Fork lever
4. Bendix drive
5. ▲ Drive side housing
6. ▲ Armature
7. ▲ Brush and brush holder
8. Field coil
9. ▲ Yoke assembly
10. ▲ Through bolt
11. Lead wire

Important Operations

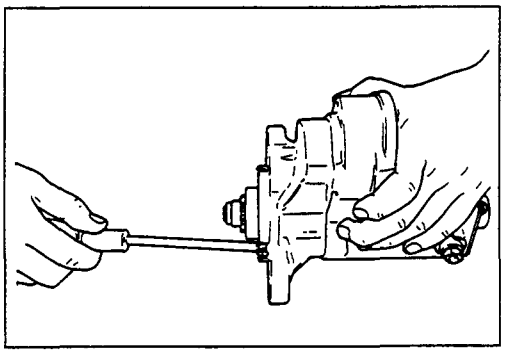

5. Drive Side Housing

Tighten the drive housing screws to the specified torque.

Drive Housing Screw Torque	N•m
8	

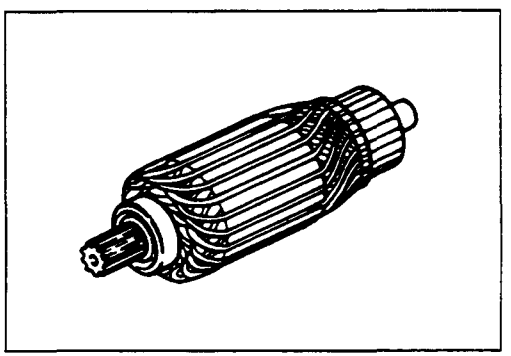

6. Armature

Apply grease to the armature shaft bearings.
Do not allow the grease to touch the armature.
Grease on the armature will result in power loss and damage.

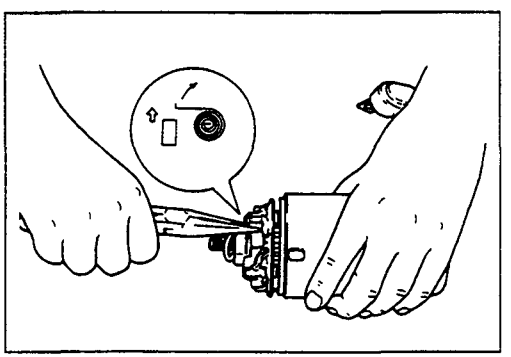

7. Bush and Brush Holder

Install the brushes and the brush holder to the yoke and the armature.
Keep the brushes free of grease and other foreign material.

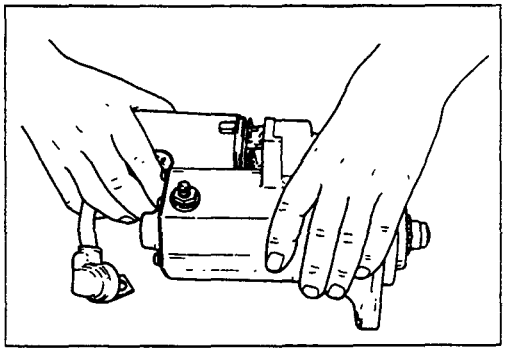

9. YOKE ASSEMBLY

Install the yoke assembly to the magnetic switch.
Be sure to use a new O-ring.
Do not attempt to reuse the old O-ring.

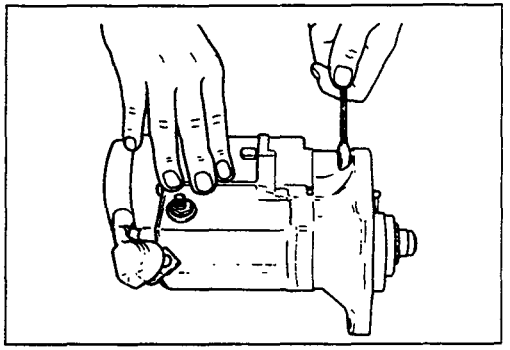

10. Through Bolt

Tighten the through bolts to the specified torque.

Drive Housing Screw Torque	N•m
6.0	

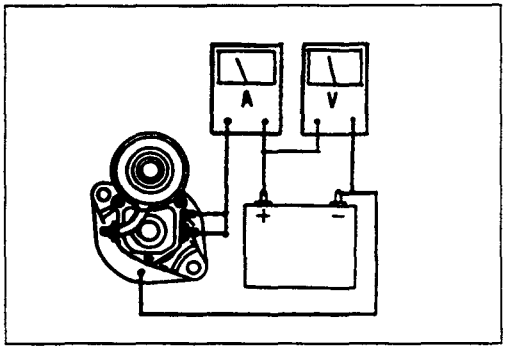

Operating Test

Perform the operating test after assembly of the starter motor.

1. Clamp the assembled starter motor securely in a vise.
2. Connect a standard 12-volt battery, a voltmeter, and an ammeter to the starter motor.
3. Apply battery voltage to the starter motor.
   Pinion position should change immediately.
   The starter motor should operate smoothly.

Test Conditions

Applied Voltage	(V)	11.5
Amperage	(A)	Less than 90
Starter Motor Operating Speed	(rpm)	More than 3,000

DISTRIBUTOR

REMOVAL AND INSTALLATION

Read this Section carefully before performing any removal and installation procedure. This Section gives you important points as well as the order of operation. Be sure that you understand everything in this Section before you begin.

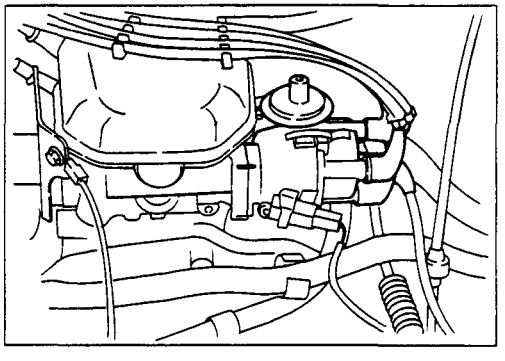

Important Operations

Mark the distributor flange and cylinder head side. then remove the distributor.

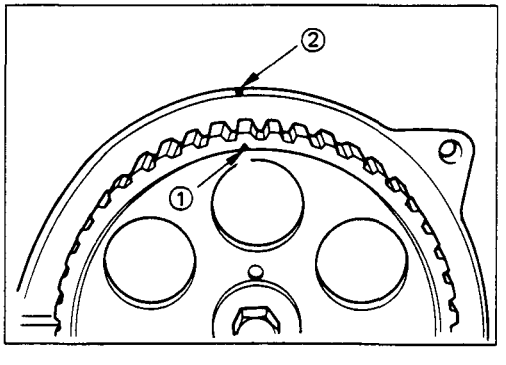

▲ Distributor

1) Move the No. 4 cylinder to TDC on the compression stroke.

   Align the camshaft pulley setting mark ① with the front plate setting mark ②.

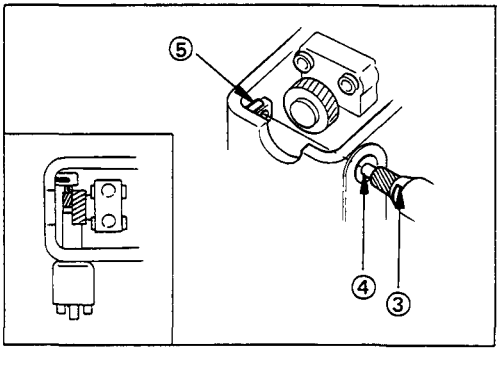

2) Apply engine oil to the O-rings.
3) Align the distributor case setting mark ③ with the distributor shaft setting mark ④.
4) Install the distributor to the cylinder head.

   Align the distributor shaft setting mark with the cylinder head setting mark ⑤.
5) Tighten the distributor bolts to the specified torque.

Distributor Bolt Torque	kg·m(lb.ft/N·m)
1.9 ± 0.5 (13.7 ± 3.6/18.6 ± 4.9)	

DISASSEMBLY/ REASSEMBLY

(Except Switzerland, Sweden & Germany, Chili (From '92))

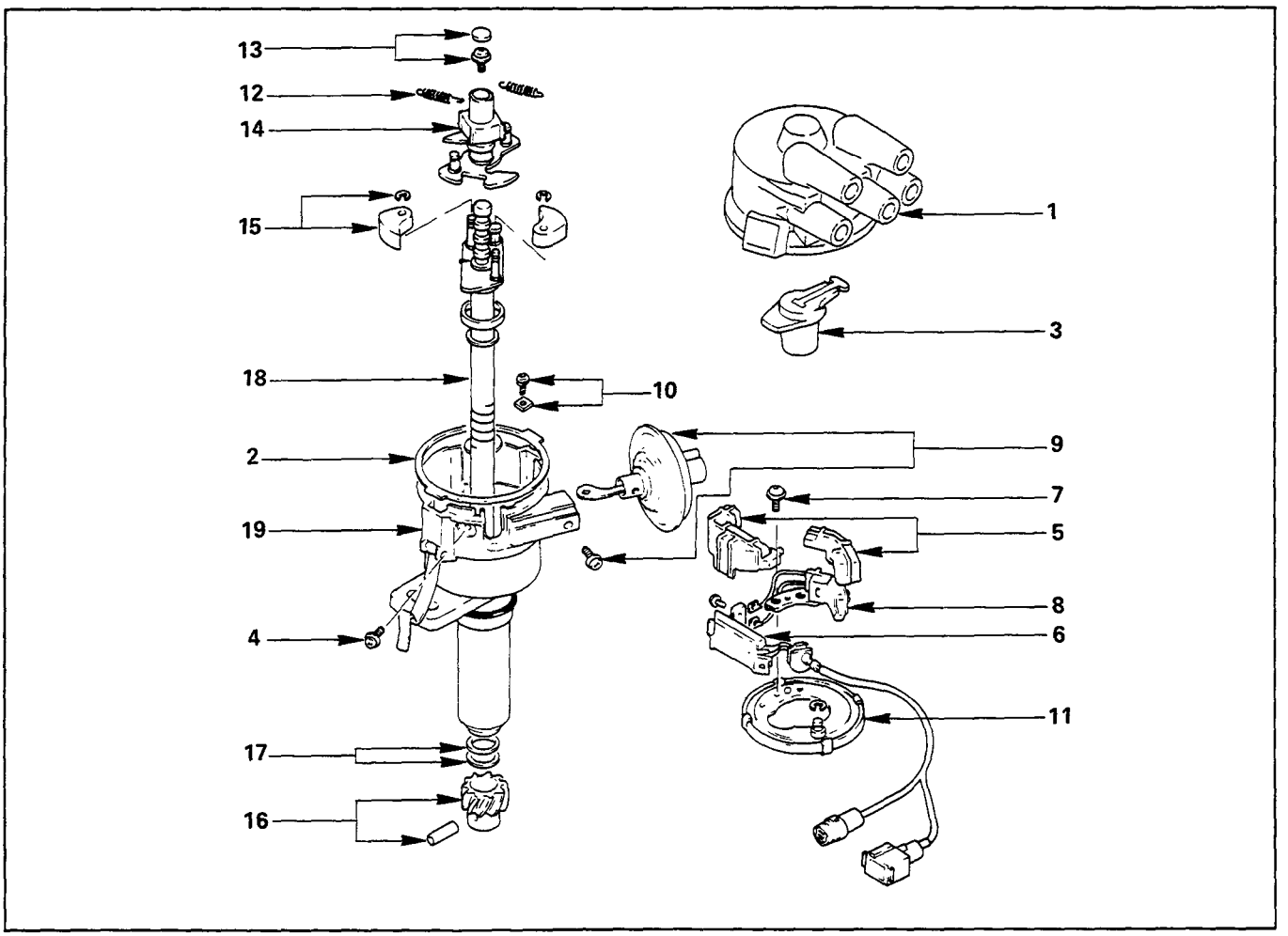

Disassembly Steps

1. Distributor cap
2. Gasket
3. Rotor
▲ 4. Ignitor screw
5. Dust proof cover
6. Ignitor
▲ 7. Signal generator screw
8. Signal generator
▲ 9. Vacuum advancer
10. Breaker plate screw
11. Breaker plate
12. Flyweight spring
13. Pad and screw
14. Signal roter shaft
15. Flyweight and clip
▲ 16. Gear and pin
17. Washer
18. Shaft
19. Housing

Reassembly

To install the distributor, follow the removal procedure in reverse order.

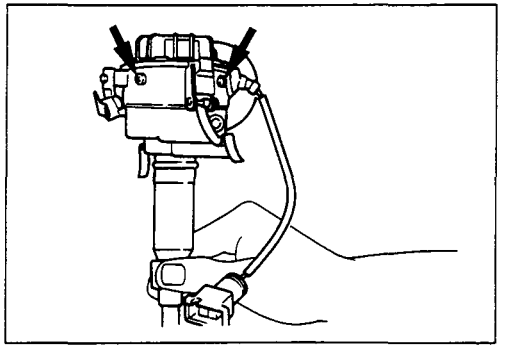

Important Operations

4. Ignitor screw

Remove the ignitor screws from housing.

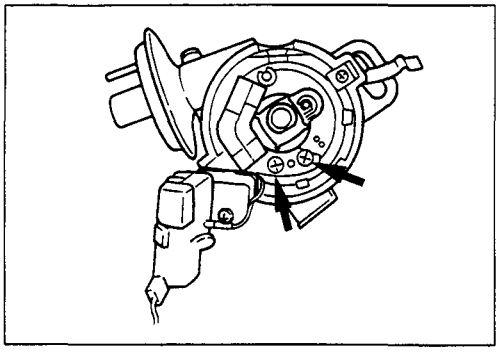

7. Signal generator screw

Remove the signal generator from breaker plate.

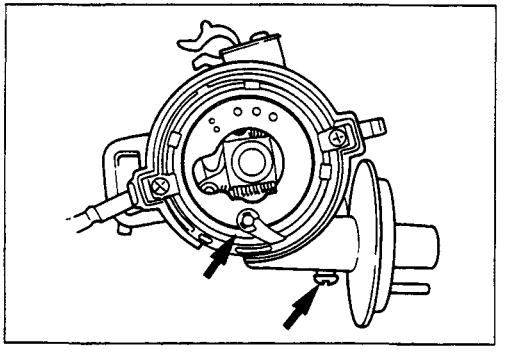

9. Vacuum advancer

Remove the circlip fixing the vacuum advancer rod and remove the vacuum advancer.

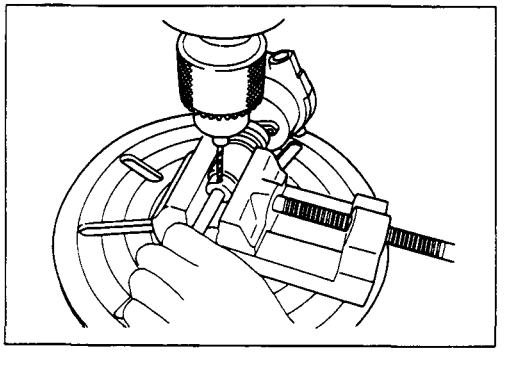

16. Gear and pin

Break away caulking on the gear and remove the pin.

INSPECTION AND REPAIR

Make the necessary adjustments, repairs, and part replacements if excessive wear or damage is discovered during inspection.

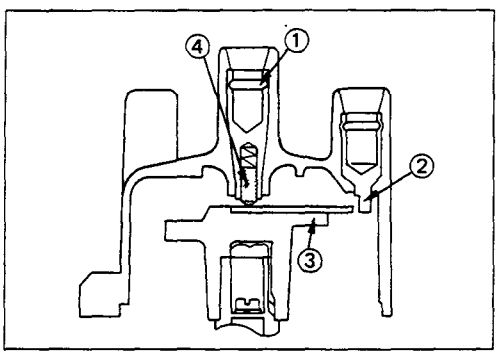

Distributor

1. Distributor Cap

   Remove the distributor cap and check the following:

   1) Check the center electrode ① and the side electrode ② for burning and corrosion.
   2) Check the rotor ③ for excessive wear and burning.
   3) Check the center carbon ④ for excessive wear and cracking.

   Replace the parts as required.

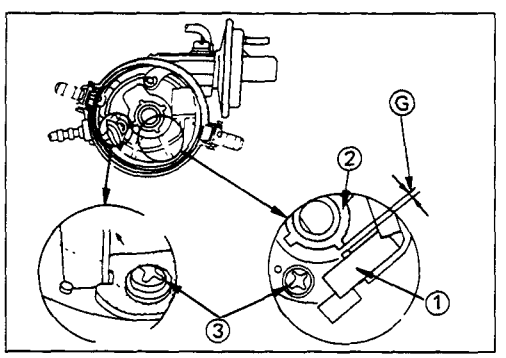

2. Air Gap

   Use a feeler gauge to measure the clearance between the signal generator ① and the distributor cam ②.

   If the measured value is outside the specified value, adjust the air gap by loosening the two screws ③ and moving the bracket.

Air Gap	mm(in)
0.2 – 0.4 (0.008 – 0.016)	

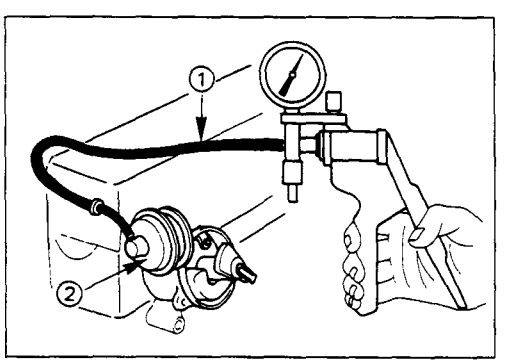

Vacuum Advancer

1. Remove the distributor cap and the igniter cover.
2. Disconnect the high tension cable from the distributor side terminal.
3. Move the high tension cable end to the coil fixing screw and keep the clearance about 5 mm.

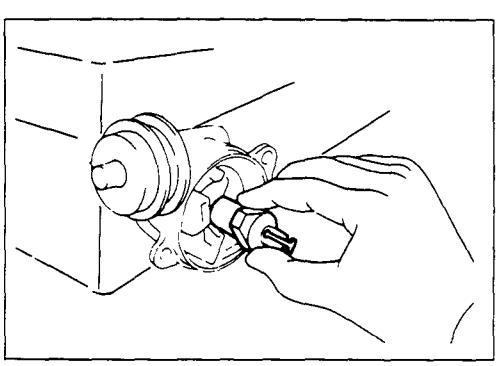

Governor

1. Check the rotor shaft for excessive looseness.

   If the shaft is excessively loose, the governor is defective and must be replaced.

2. Turn the rotor shaft clockwise 1/4 of a turn and release it.

   The rotor shaft should spring back.

   If the shaft does not spring back, the governor is defective and must be replaced.

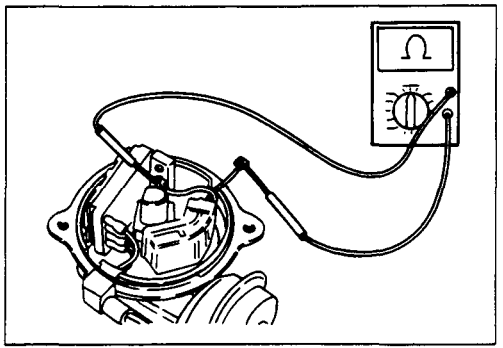

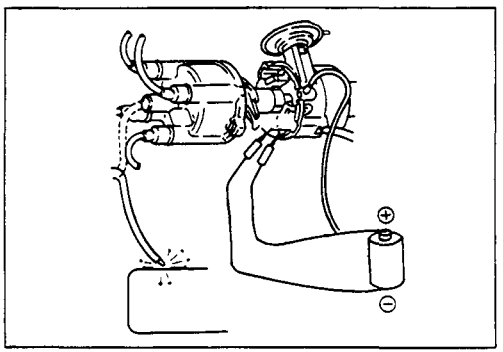

INSPECTION ON THE VEHICLE

Signal Generator

- Set the key switch to "OFF" position.
- Remove the distributor cap.
- Measure resistance across the signal generator terminals between red and white.

Ω

Standard resistance	140 – 180

Ignitor

1. Remove the distributor cap.
2. Disconnect the ignition coil high-tension cable at the distributor side, and maintain a 5 to 6 mm gap between the cable end and the ground.
3. Connect a 1.5-volt dry cell battery to the red terminal ignitor at its (+) side and to the white terminal of ignitor at its (–) side.
4. Turn the key switch to the "ON" position.

- The ignitor is considered normal when spark are generated between the high-tension cable and the ground when one connected is disconnected.

Do not apply voltage to the ignitor for more than 3 seconds.

DISASSEMBLY (For 4ZD1)

(For Switzerland, Sweden, Germany and Chili (From '92))

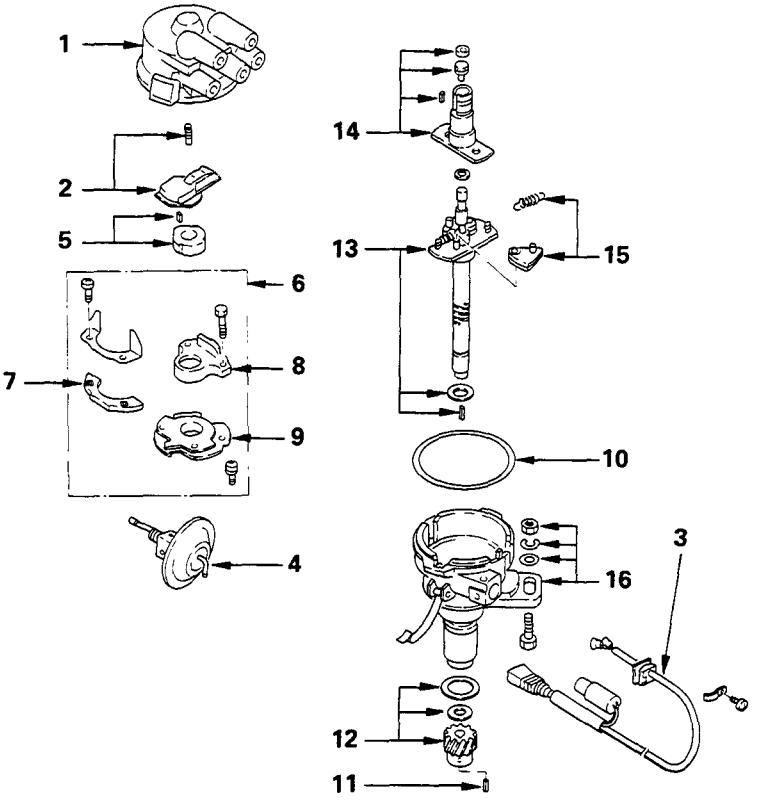

Disassembly Steps

▲ 1. Distributor cap
2. Distributor rotor
3. Distributor lead wire
▲ 4. Vacuum control
▲ 5. Retractor
6. Breaker plate, magnet and unit
7. Distributor magnet
8. Distributor unit
9. Breaker plate
10. Housing gasket
▲ 11. Roll pin
▲ 12. Pinion gear and gasket
13. Distributor shaft
14. Rotor shaft
▲ 15. Governor flyweight and spring
16. Distributor housing

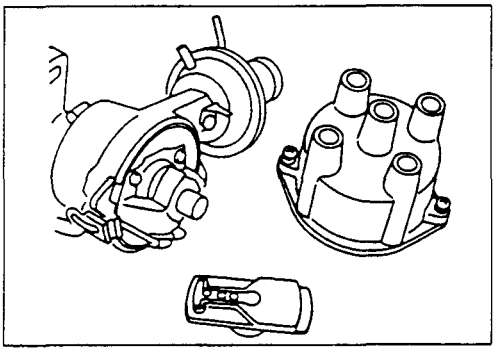

Important Operations

1. Distributor Cap

1. Remove the distributor cap fixing screw.
2. Remove the distributor cap and the rotor.
3. Pull the carbon points from the distributor cap.

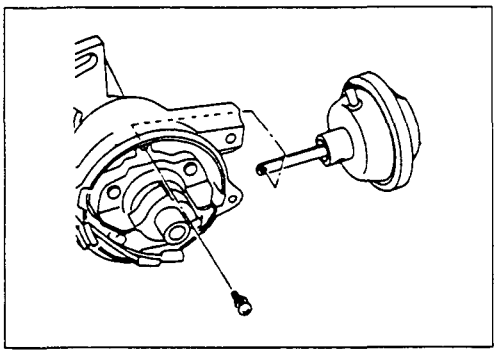

4. Vacuum Control

Remove the ground terminal and vacuum control mounting screw.

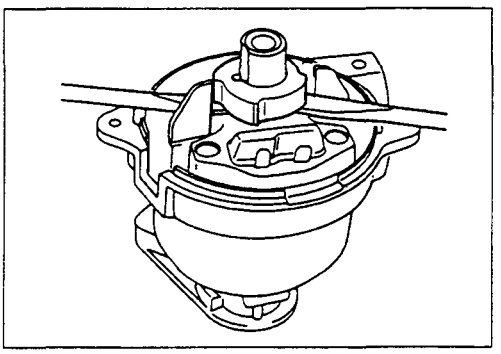

5. Retractor

1. Pry loose the retractor outer cover.
2. Insert a screwdriver into the lower side of the retractor.
3. Pull the retractor free.

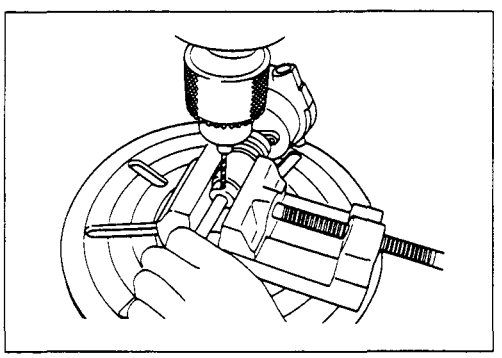

11. Roll Pin

12. Pinion Gear and Gasket

Break away the staking on the gear set and remove the pin.
File off staked end of the roll pin, then drive out the roll pin toward the opposite side.

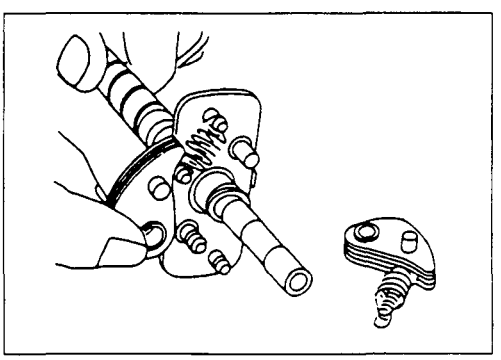

15. Governor Flyweight and Spring

Remove the governor weight and the springs from the shaft.

INSPECTION AND REPAIR

Make the necessary adjustments, repairs, and part replacements if excessive wear or damage is discovered during inspection.

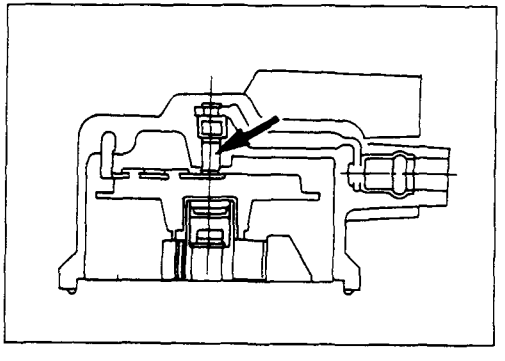

Distributor Cap

Check the distributor cap and rotor for cracks and carbon tracks. Check the distributor cap center contact for wear. Center contact should be 2.2 mm (0.087 in) or longer.

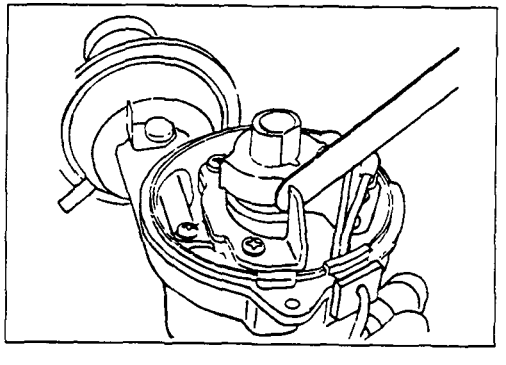

Air Gap

Using a feeler gauge, measure the air gap between the pick-up coil projections.

Air Gap	mm(in)
0.3 – 0.5 (0.012 – 0.020)	

Adjust air gap if necessary.
Loosen the two screws and move the ignitor until the gap is correct. Tighten the two screws and check the air gap.

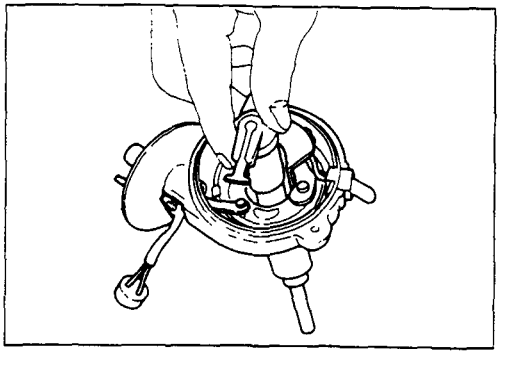

Governor Control

Turn the rotor shaft counter-clockwise, release it, and check that the rotor returns slightly clockwise.

REASSEMBLY

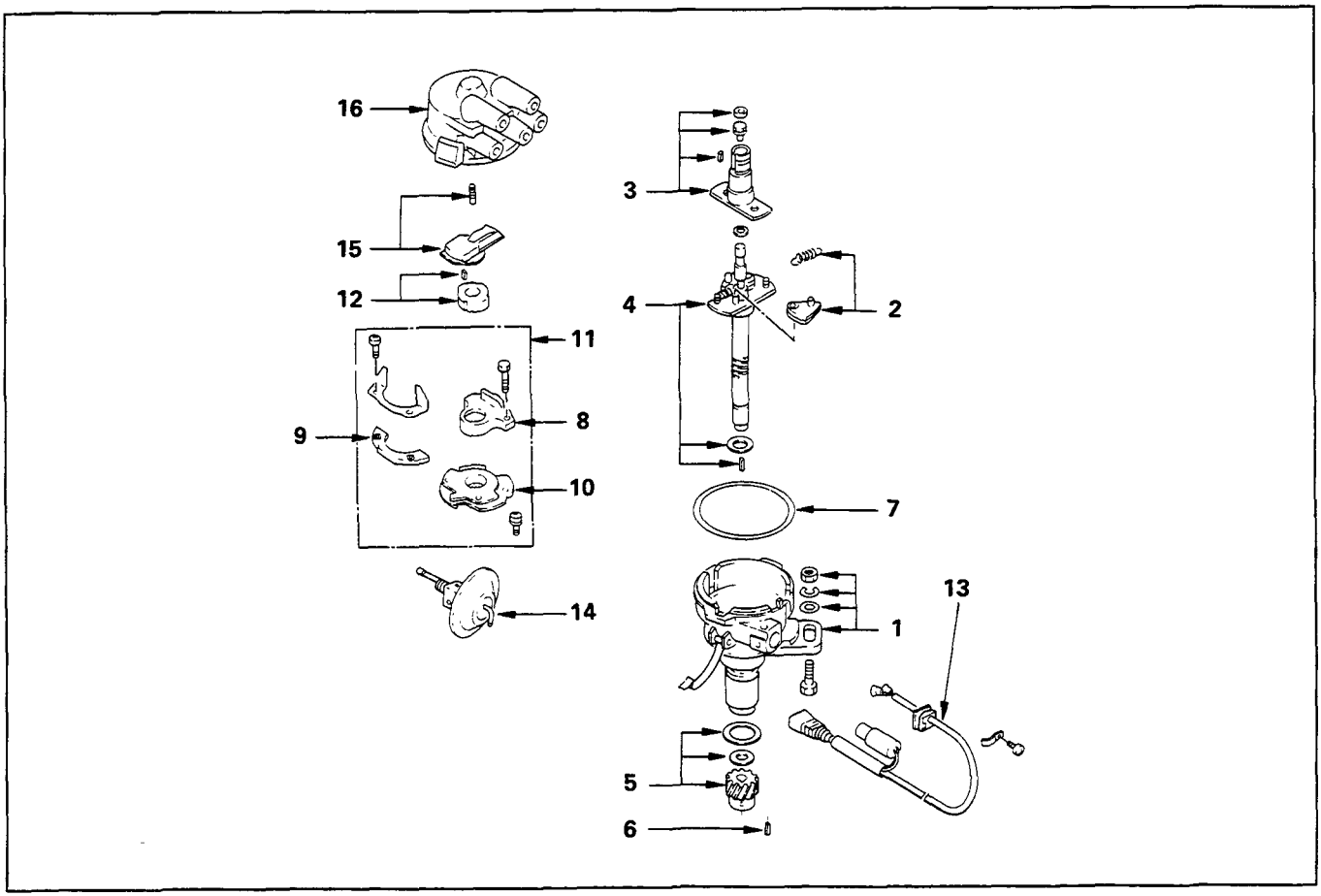

Reassembly Steps

1. Distributor housing
▲ 2. Governor flyweight and spring
▲ 3. Rotor shaft
4. Distributor shaft
▲ 5. Pinion gear and gasket
▲ 6. Roll pin
7. Housing gasket
8. Distributor unit
9. Distributor magnet
10. Breaker plate
▲ 11. Breaker plate, magnet, and unit
▲ 12. Retractor
13. Distributor lead wire
▲ 14. Vacuum control
15. Distributor rotor
16. Distributor cap

Important Operations

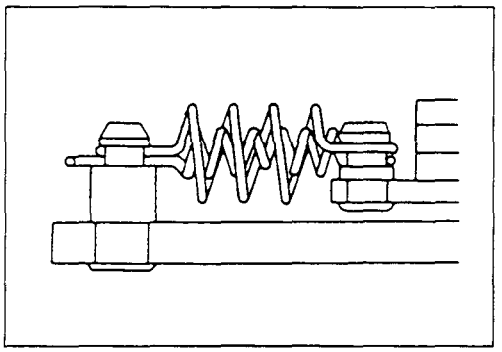

2. Governor Flyweight and Spring

Attach the governor spring to the shaft spring hanger pin. The smaller tapered ends of the spring (both ends) should be secured to the lower side of the hook.

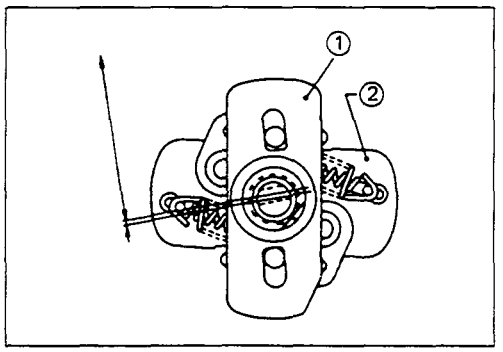

3. Rotor Shaft

Carefully align the rotor shaft ① notches and the distributor shaft ② notches when installing the rotor shaft.

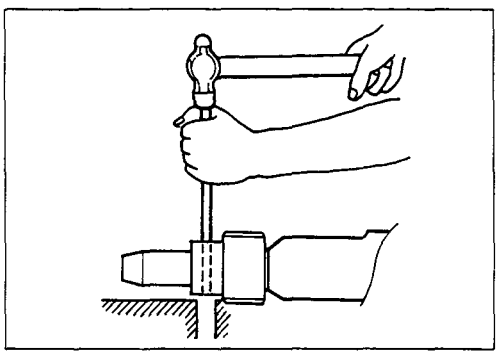

5. Pinion Gear and Gasket

6. Roll Pin

1. Carefully align the pinion gear pin hole and distributor shaft pin hole.
2. Set the pinion gear with gasket to the distributor shaft.
3. Insert the roll pin into the pin hole.
4. Caulk the roll pin both side.

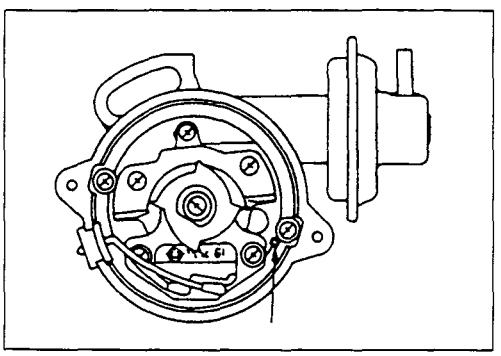

11. Breaker Plate, Magnet, and Unit

Carefully align the scribe marks on the breaker plate and the housing.

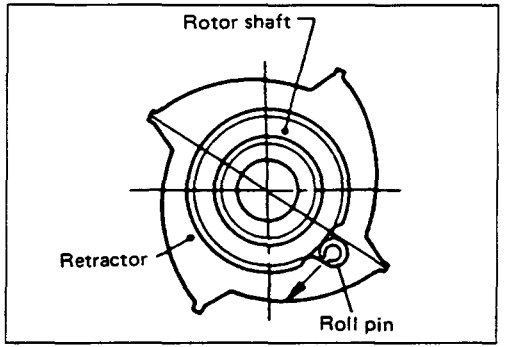

12. Retractor

The roll pin notch and the retractor notch must be parallel when the roll pin is inserted into the retractor.

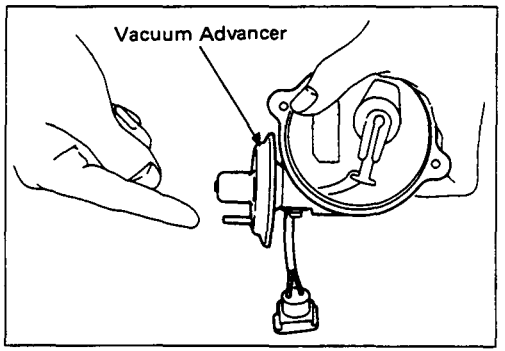

14. Vacuum Control

Apply vacuum and check that the vacuum advancer moves.

IGNITION COIL

REMOVAL AND INSTALLATION

Read this Section carefully before performing any removal and installation procedure. This Section gives you important points as well as the order of operation. Be sure that you understand everything in this Section before you begin.

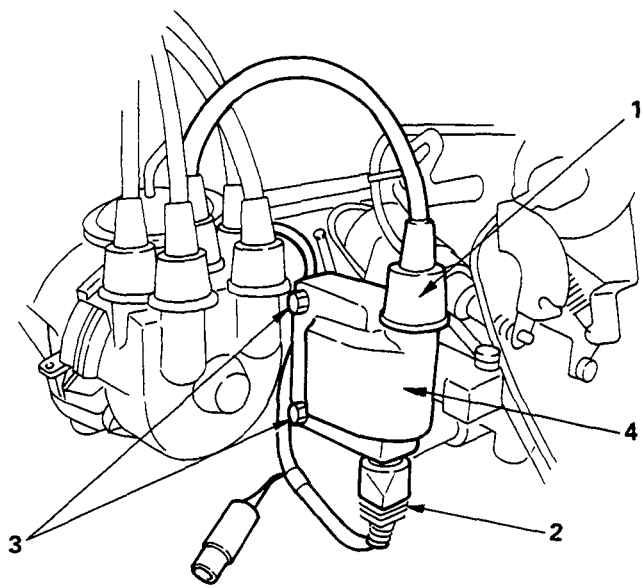

Removal Steps

1. High-tension cable
2. Lead (positive and negative terminals)
3. Attaching bolt
4. Ignition coil

Installation Steps

To install, follow the removal procedure in the reverse order.

TROUBLESHOOTING

Refer to this Section to quickly troubleshoot and repair engine electrical problems. Each troubleshooting chart has three headings arranged from left to right.

(1) Checkpoint (2) Trouble Cause (3) Countermeasure

This Section is divided into five sub-sections:

1. Charging and Noise Problem
   1) Noise charging takes place.
   2) Battery overcharging
   3) Battery undercharging
   4) Charging current unstable
   5) Noise
2. Starter Switch and Starter Motor Faulty
   1) Solenoid switch does not work when starter switch is turned on.
   2) Pinion engages ring gear properly, but engine will not turn over.
   3) Pinion gear does not properly engage ring gear.
   4) Starter motor does not stop when starter switch is turned off.
   5) Excessive sparking at commutator
3. Ignition Faulty
   1) No spark occurs.
   2) Spark occurs irregularly or jump across gap of only 1 to 2 mm (0.04 to 0.08 in).
   3) Spark jumps across gap of 5 mm (0.2 in) or more.
4. Rough Engine Running
   1) Engine misfires regularly.
   2) Engine knocks regularly.
   3) Engine lacks power.

1. CHARGING AND NOISE PROBLEM

1) NO CHARGING TAKES PLACE

Checkpoint		Trouble Cause	Countermeasure
Terminal and connector	NG	Broken or defective terminal and/or connector	Repair the terminal and/ or connector
OK			
Part ground condition	NG	Poorly grounded	Repair the grounded
OK			
Brush contact with slip ring	NG	Poorly brush contact with slip ring	Repair or replace the brush contact with slip ring
OK			
Stator coil	NG	Opened or burned stator coil	Repair or replace the stator coil
OK			
Rotor coil	NG	Opened or burned rotor coil	Repair or replace the rotor coil
OK			
Diode	NG	Defective diode	Replace the diode
OK			
IC regulator	NG	Defective	Replace

2) BATTERY OVERCHARGING

Checkpoint		Trouble Cause		Countermeasure
"B" and "F" terminal circuit	NG	Shorted terminal circuit	—	Repair or replace the terminal
OK				
IC regulator	NG	Voltage adjusted too high	—	Replace

3) BATTERY UNDERCHARGING

Checkpoint		Trouble Cause		Countermeasure
Terminal	NG	Loosen terminal	—	Tighten the terminal
OK				
V-Belt	NG	Slipping V-belt	—	Adjust or replace the V-belt
OK				
Brush contact with slip ring	NG	Poorly brush contact with slip ring	—	Correct or replace the brush holder
OK				
Rotor coil	NG	Shorted rotor coil	—	Correct or replace the rotor coil
OK				

Continued on the next page

Continued from the previous page

Checkpoint		Trouble Cause	Countermeasure
Stator coil	NG	Coil shorted or opened stator	Repair or replace the stator coil
Diode (OK)	NG	Defective diode	Replace the diode
Electrical load (OK)	NG	Excessive electrical load	Use higher capacity alternator
IC regulator (OK)	NG	Voltage adjusted too low	Replace

4) CHARGING CURRENT UNSTABLE

Checkpoint		Trouble Cause	Countermeasure
Terminal connection	NG	Loose terminal	Tighten the terminal
OK			
V-belt	NG	Loosen V-belt	Adjust the V-belt
OK			
Brush contact with slip ring	NG	Poor brush contact with slip ring	Repair or replace the brush contact
OK			
Rotor coil	NG	Shorted or opened rotor coil	Repair or replace the rotor coil
OK			
Stator coil	NG	Shorted or opened stator coil	Repair or replace the stator coil
OK			
Connection between stator coil and diode	NG	Loose connection between stator coil and diode	Repair the connection

5) NOISE

Checkpoint		Trouble Cause	Countermeasure
Parts mounting condition	NG	Loose parts mount	Repair the parts mount
OK			
V-belt	NG	Defective V-belt	Replace the V-belt
OK			
Bearing	NG	Defective bearing	Replace the bearing
OK			
Diode	NG	Defective diode	Replace the diode
OK			
Stator coil	NG	Shorted stator coil	Repair or replace the stator coil

2. STARTER SWITCH AND STARTER MOTOR FAULTY

1) SOLENOID SWITCH DOES NOT WORK WHEN STARTER SWITCH IS TURNED ON

Checkpoint		Trouble Cause	Countermeasure
Battery	NG	Battery charge too low	Recharge the battery
OK			
Starter circuit	NG	Opened circuit, poorly connected, or incorrectly wired	Repair or replace the circuit, connector, or wire
OK			
Starter switch	NG	Defective starter switch contact point	Replace the starter switch
OK			
Magnetic switch coil	NG	Opened or burned magnetic switch coil	Replace the magnetic switch
OK			
Plunger shaft	NG	Bent or binding plunger shaft	Repair or replace the plunger shaft

2) PINION ENGAGES RING GEAR PROPERLY BUT ENGINE WILL NOT TURN OVER

Checkpoint		Trouble Cause	Countermeasure
Battery	NG	Battery charge too low	Recharge the battery
OK			
Brush contact with commutator	NG	Poor brush contact with commutator	Repair or replace the commutator
OK			
Pinion clutch	NG	Slipping pinion clutch	Replace the pinion clutch
OK			
Armature field coil	NG	Defective field coil	Repair or replace the field coil

3) PINION GEAR DOES NOT PROPERLY ENGAGE RING GEAR

Checkpoint		Trouble Cause	Countermeasure
Battery	NG	Battery charge too low	Recharge the battery
OK			
Pinion gear teeth and ring gear teeth	NG	Worn or damaged pinion gear and ring gear	Replace the pinion gear and ring gear
OK			
Pinion gear movement	NG	Incorrect pinion returning	Repair the pinion

Continued on the next page

Checkpoint		Trouble Cause	Countermeasure
Continued from the previous page			
OK			
Armature shaft	NG	Defective bearing	Replace the bearing

4) STARTER MOTOR DOES NOT STOP WHEN STARTER SWITCH IS TURNED OFF

Checkpoint		Trouble Cause	Countermeasure
Engage switch contact point	NG	Seized engage switch	Repair or recharge the engage switch contact point
OK			
Starter switch	NG	Defective starter switch	Replace the starter switch

5) EXCESSIVE SPARKING AT COMMUTATOR

Checkpoint		Trouble Cause	Countermeasure
Brush contact with commutator	NG	Poor brush contact with commutator	Repair or replace the commutator
OK			
Commutator	NG	Commutator segment or under-cut phenol resin protected	Correct or replace the commutator
	NG	Loose commutator	Repair or replace the commutator
OK			
Armature shaft	NG	Run-out due to uneven wear in bearing	Replace the armature or bearing
OK			
Brush holder	NG	Loose mount	Repair the mount

3. IGNITION FAULTY

1) NO SPARK OCCURS

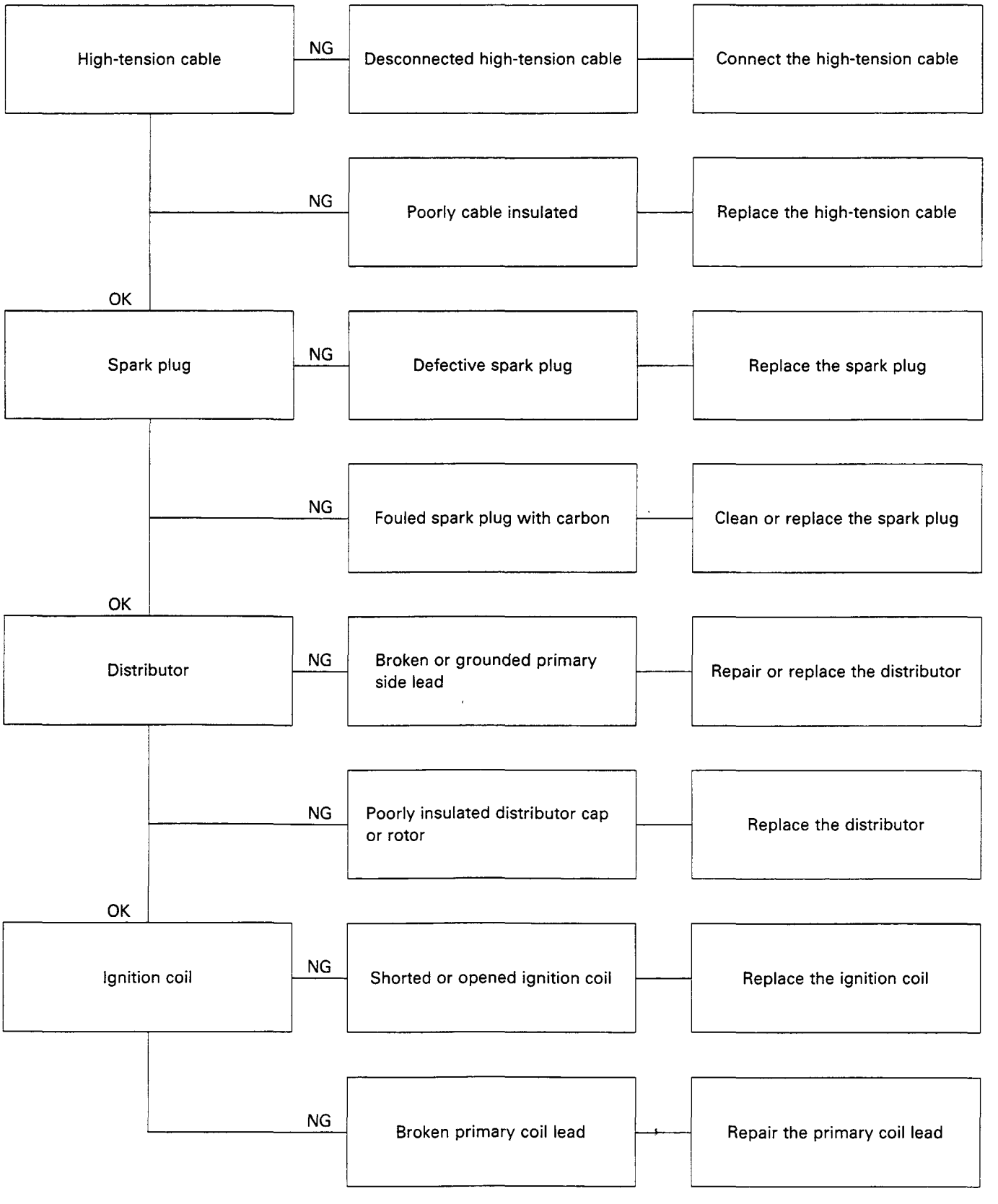

2) SPARK OCCURS IRREGULARLY OR JUMPS ACROSS GAP OF ONLY 1 to 2 mm (0.04 to 0.08 in)

Checkpoint		Trouble Cause	Countermeasure
Ignition coil	NG	Shorted ignition coil	Replace the ignition coil

3) SPARK JUMPS ACROSS GAP OF 5 mm (0.2 in) OR MORE

Checkpoint		Trouble Cause	Countermeasure
Spark plug	NG	Excessive spark plug gap	Adjust or replace the spark plug
	NG	Fouled spark plug with carbon	Clean or replace the hotter type spark plug
	NG	Broken porcelain insulator	Replace the spark plug
	NG	Worn out spark plug electrode	Replace the spark plug

4. ROUGH ENGINE RUNNING

1) ENGINE MISFIRES REGULARLY

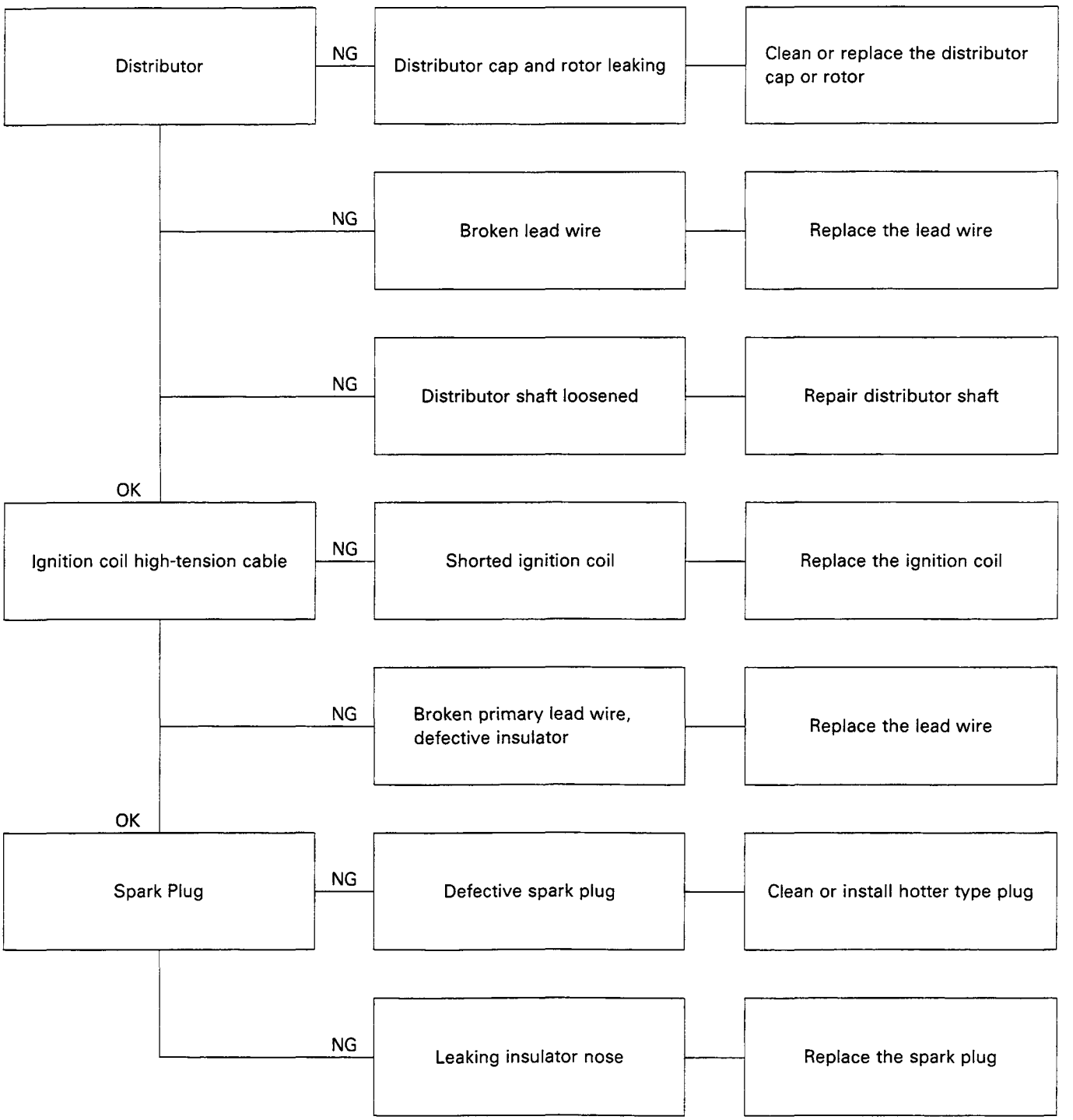

2) ENGINE KNOCKS REGULARLY

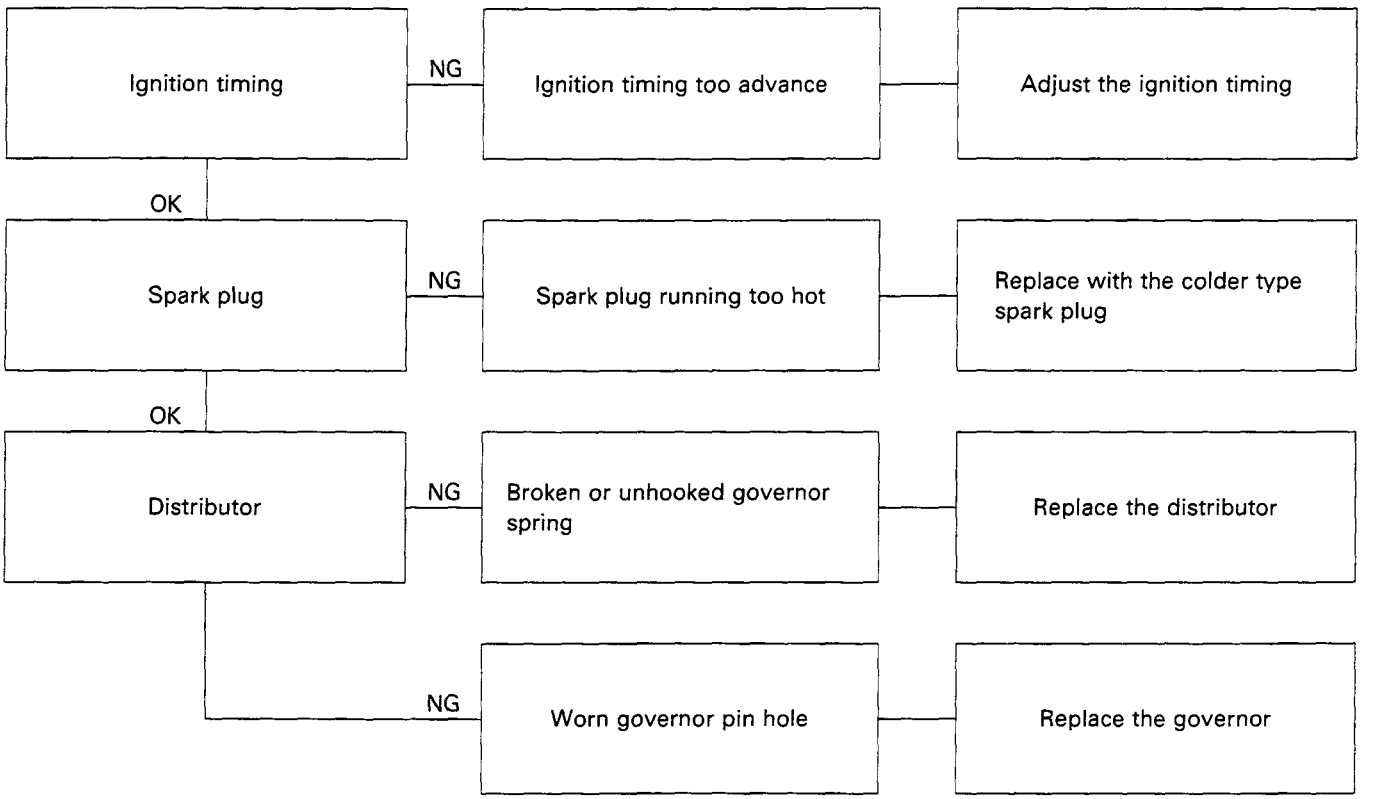

3) ENGINE LACKS POWER

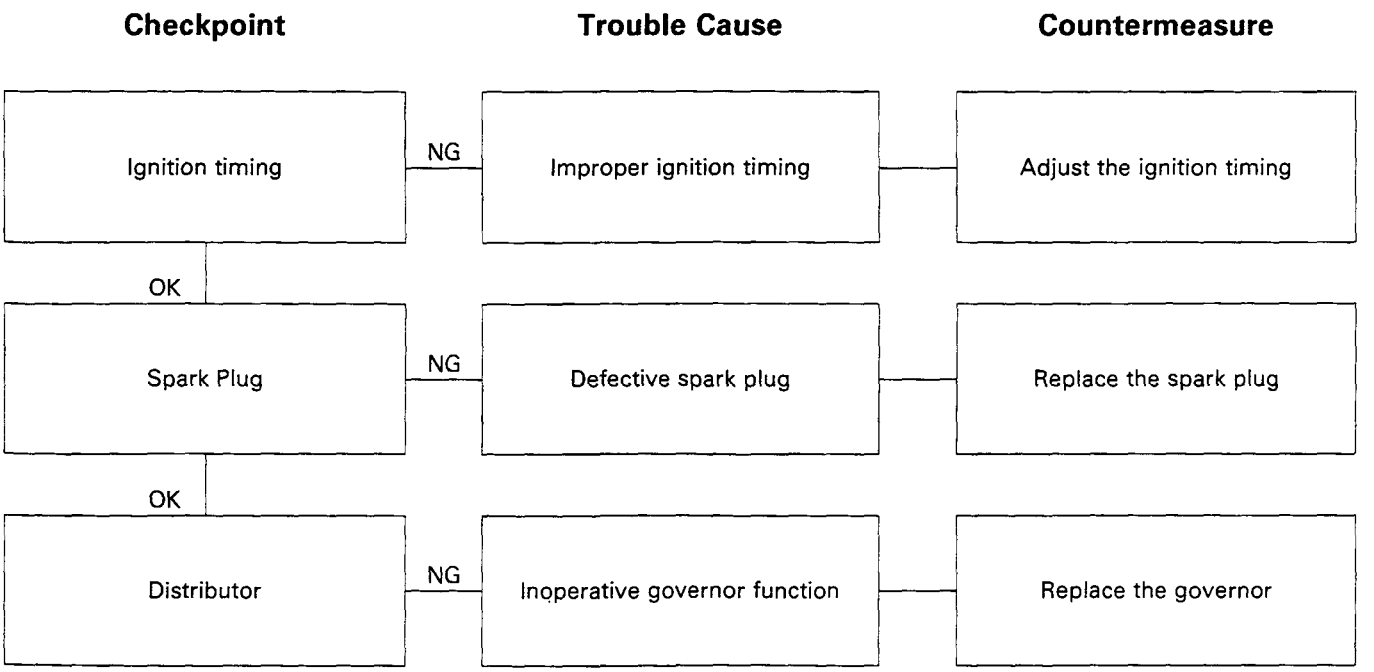

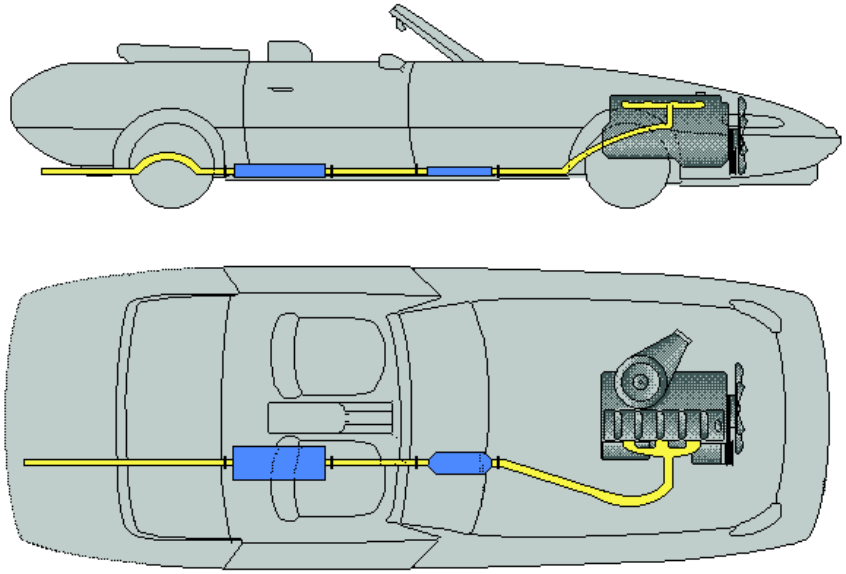

KB TF 140 Petrol
Engine Exhaust

ISUZU

Index
Specs.
Removal
Inspection

SECTION 6F

ENGINE EXHAUST

TABLE OF CONTENTS

PAGE

Main Data and Specifications ..... 6F—2
General Description ..... 6F—2
Removal and Installation ..... 6F—3
Inspection and Repair ..... 6F—4

MAIN DATA AND SPECIFICATIONS

Exhaust system		
Pipe outside diameter × thickness		
Front pipe	mm(in)	50.8 × 1.5 (2.0 × 0.059)
Middle pipe	mm(in)	50.8 × 1.5 (2.0 × 0.059)
Rear pipe	mm(in)	50.8 × 1.6 (2.0 × 0.063)
Silencer		
Type		Circular section-shell construction of triple skin and end plates, internal construction of baffles and perforated tubes.
Inside diameter	mm(in)	Approximately 180 (7.09)
Length	mm(in)	Approximately 525 (20.67)
Mounting		
Number of suspension points		5
Type		Rubber and metal
Catalytic converter type		Oxidizing catalytic (Until '90 model)
(For Switzerland and Sweden)		Three-way catalytic (From '91 model)

GENERAL DESCRIPTION

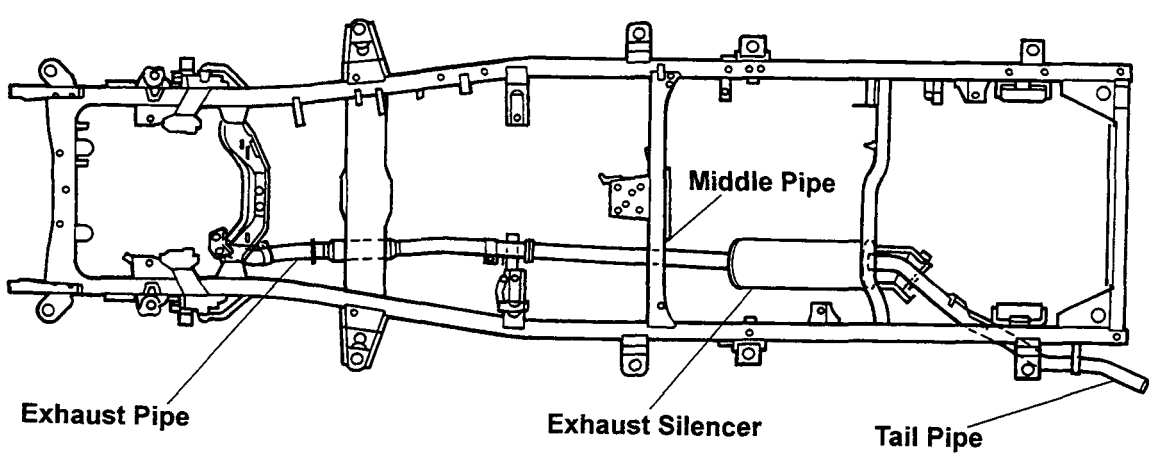

REMOVAL AND INSTALLATION

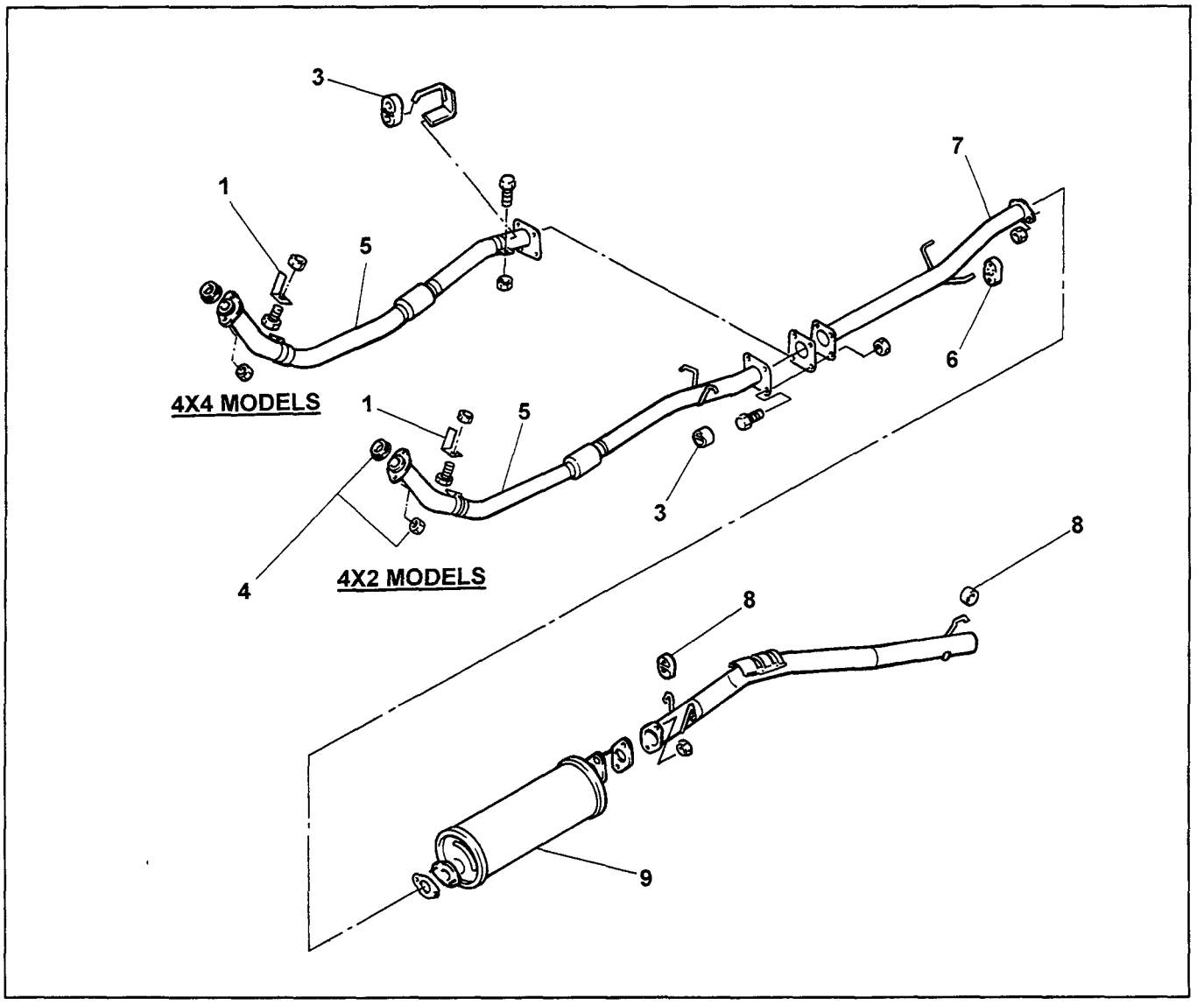

Removal Steps

1. Front exhaust pipe bracket nut (Transmission side)
2. Front exhaust pipe mounting bracket nut (4x4 model)
3. Front exhaust pipe damper ring
4. Front exhaust pipe flange nut with gasket
5. Front exhaust pipe
6. Center exhaust pipe damper ring
7. Center exhaust pipe
8. Rear exhaust pipe damper rings
9. Exhaust silencer with rear exhaust pipe

Installation Steps

9. Exhaust silencer with rear exhaust pipe
8. Rear exhaust pipe damper rings
7. Center exhaust pipe
6. Center exhaust pipe damper ring
5. Front exhaust pipe
▲ 4. Front exhaust pipe flange nut with gasket
3. Front exhaust pipe damper ring
2. Front exhaust pipe mounting bracket nut (4x4 model)
1. Front exhaust pipe bracket nut (Transmission side)

Important — Installation

9. Exhaust Silencer with Rear Exhaust Pipe

Apply muffler sealer to the joining portion of the pipes.

4. Front Exhaust Pipe Flange Nut

Connect the exhaust pipe to the exhaust manifold.

Front exhaust pipe to manifold nut.

Torque	kg·m(lb.ft/N·m)
6.8 ± 0.5 (49 ± 3.6/66 ± 5)	

INSPECTION AND REPAIR

Make the necessary adjustments, repairs, and part replacements if excessive wear or damage is discovered during inspection.

Front Exhaust Pipe

Center Exhaust Pipe and Catalytic Converter Flange Nut

Exhaust Pipe Damper Ring

Exhaust Silencer with Rear Exhaust Pipe

Check the pipes for corrosion, cracking, damage or misalignment and repair if required.
Check the rubber rings for deterioration or damage and repair if required.

DELTA OPEL ISUZU SUZUKI

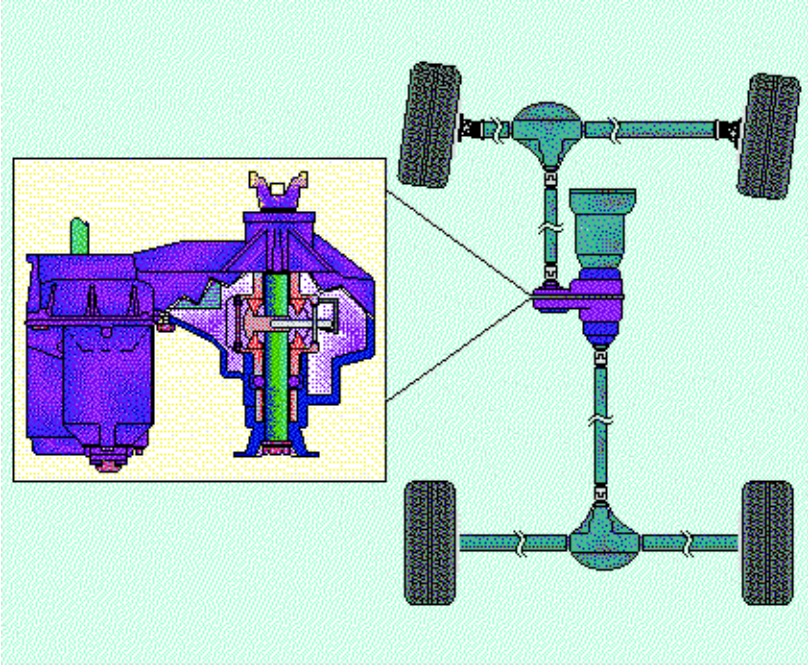

Index

4 x 2

4 x 4

KB TF 140
MSG Gearbox

ISUZU

SECTION 7B
MANUAL TRANSMISSION

TABLE OF CONTENTS

	PAGE
4 X 2 Model transmission	7B – 2
Main data and specifications	7B – 2
General description	7B – 3
Torque specifications	7B – 4
Repair kit	7B – 6
Removal and installation	7B – 7
Disassembly	7B – 15
Inspection and repair	7B – 25
Reassembly	7B – 29

4 X 2 MODEL TRANSMISSION

MAIN DATA AND SPECIFICATIONS

Transmission type		Fully synchonized 5-forward gears with a constant mesh type reverse gear.
Transmission Control		Direct control with the gear shift lever on the floor.
Gear ratio		5K 4.122 2.493 1.504 1.000 0.855 3.720
Oil capacity	lit. (US gal.)	1.55 (0.41)
Weight ; approx.,	kg (lbs)	33.3 (73.8)

GENERAL DESCRIPTION

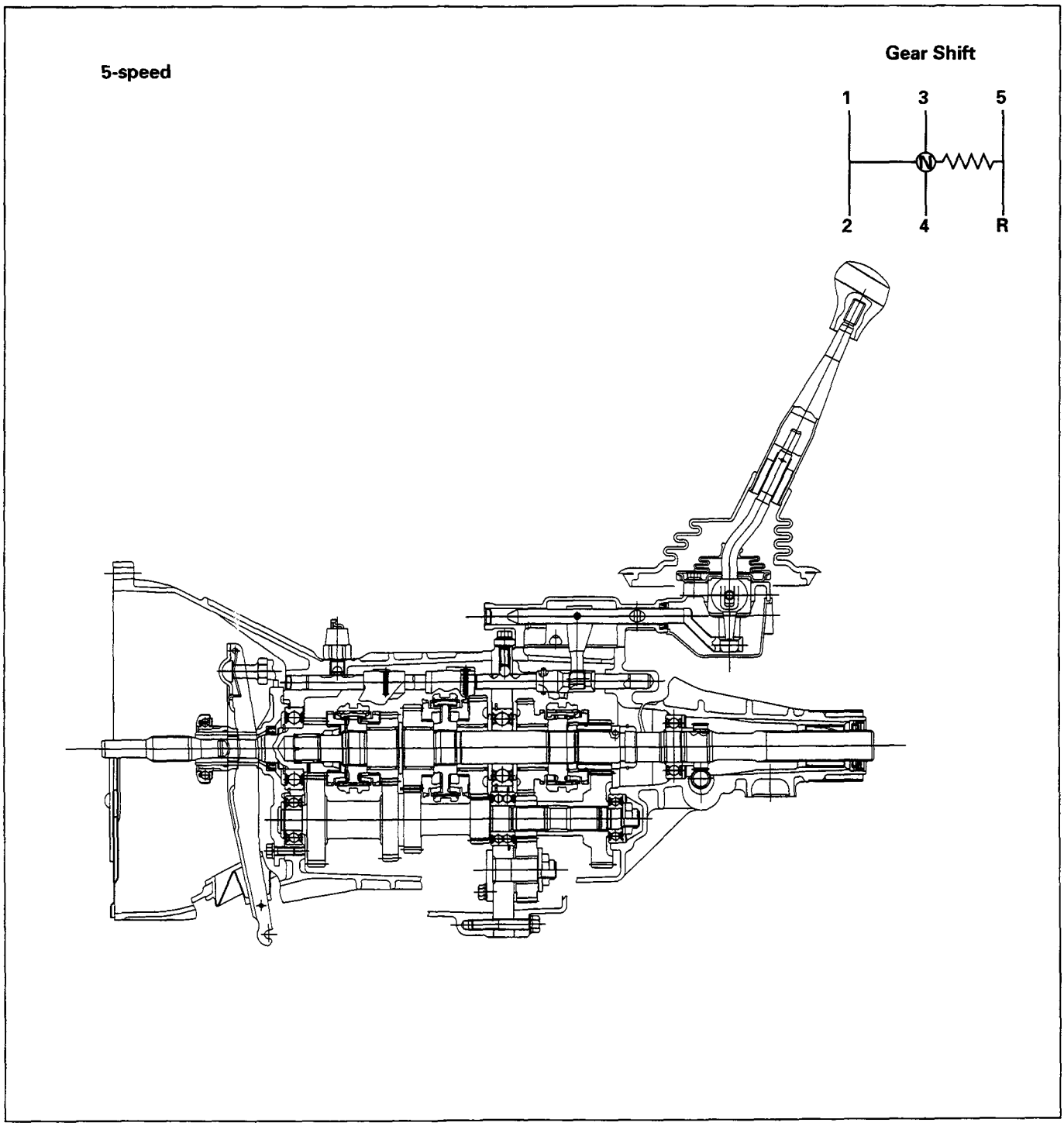

A07LV002

The MSG type transmission is fully synchronized 5-speed unit with blocking ring type synchronizers and a constant mesh type reverse gear. The unit consists principally of a case with an integral clutch housing, intermediate plate, rear cover and gears. The top of the rear cover is a quadrant box containing the transmission control mechanism. The case and rear cover are cast aluminum alloy to reduce weight.

TORQUE SPECIFICATION

STANDARD BOLTS

The torque values given in the following table should be applied where a particular torque is not specified.

N·m (kg·m / lb·ft)

	Strength Class	4.8/4T	7T	8.8		9.8/9T
				Refined	Non-Refined	
	Bolt Identification	4	7	8	8	9
	Bolt Diameter× Pitch (mm)	No mark	—			
Standard Hex. Head Bolt	M6 × 1.0	6 (0.6 / 52 lb·in)	7 (0.7 / 61 lb·in)	8 (0.8 / 69 lb·in)		–
	M8 × 1.25	13 (1.3 / 113 lb·in)	17 (1.7 / 12)	20 (2.0 / 14)		24 (2.4 / 17)
	M10 × 1.25	27 (2.8 / 20)	37 (3.8 / 27)	42 (4.3 / 31)		50 (5.1 / 37)
	M12 × 1.25	61 (6.3 / 45)	76 (7.8 / 56)	87 (8.9 / 64)		95 (9.7 / 70)
	M14 × 1.5	96 (9.8 / 71)	116 (11.8 / 85)	133 (13.6 / 98)		142 (14.5 / 105)
	M16 × 1.5	130 (13.3 / 96)	170 (17.3 / 125)	193 (19.7 / 143)		200 (20.4 / 148)
	M18 × 1.5	188 (19.2 / 139)	244 (24.9 / 180)	278 (28.3 / 205)		287 (29.3 / 212)
	M20 × 1.5	258 (26.3 / 190)	337 (34.4 / 249)	385 (39.3 / 284)		396 (40.4 / 292)
	M22 × 1.5	332 (33.9 / 245)	453 (46.3 / 335)	517 (52.7 / 381)		530 (54.1 / 391)
	M24 × 2.0	449 (45.8 / 331)	570 (58.2 / 421)	651 (66.3 / 480)		692 (70.6 / 511)
	* M10 × 1.5	26 (2.7 / 20)	36 (3.7 / 27)	41 (4.2 / 30)		48 (4.9 / 35)
	* M12 × 1.75	57 (5.8 / 42)	71 (7.2 / 52)	80 (8.2 / 59)		89 (9.1 / 66)
	* M14 × 2.0	89 (9.1 / 66)	110 (11.2 / 81)	125 (12.7 / 92)		133 (13.6 / 98)
	* M16 × 2.0	124 (12.7 / 92)	162 (16.5 / 119)	185 (18.9 / 137)		191 (19.5 / 141)
Flange Bolt	M6 × 1.0	7 (0.7 / 61 lb·in)	8 (0.8 / 69 lb·in)	9 (0.9 / 78 lb·in)		–
	M8 × 1.25	15 (1.5 / 11)	19 (1.9 / 14)	22 (2.2 / 16)		26 (2.7 / 20)
	M10 × 1.25	31 (3.2 / 23)	41 (4.2 / 30)	47 (4.8 / 35)		56 (5.7 / 41)
	M12 × 1.25	69 (7.0 / 51)	85 (8.7 / 63)	97 (9.9 / 72)		106 (10.8 / 78)
	M14 × 1.5	104 (10.6 / 77)	126 (12.8 / 93)	144 (14.6 / 106)		154 (15.7 / 114)
	M16 × 1.5	145 (14.8 / 127)	188 (19.2 / 139)	214 (21.8 / 158)		221 (22.5 / 163)
	M18 × 1.5	–	–	–		–
	M20 × 1.5	–	–	–		–
	M22 × 1.5	–	–	–		–
	M24 × 2.0	–	–	–		–
	* M10 × 1.5	30 (3.1 / 22)	40 (4.1 / 30)	46 (4.7 / 34)		54 (5.5 / 40)
	* M12 × 1.75	64 (6.5 / 47)	78 (8.0 / 58)	89 (9.1 / 66)		99 (10.1 / 73)
	* M14 × 2.0	97 (9.9 / 72)	119 (12.1 / 88)	135 (13.8 / 99.7)		144 (14.7 / 107)
	* M16 × 2.0	137 (14.0 / 101)	178 (18.2 / 132)	203 (20.7 / 150)		210 (21.5 / 155)

The asterisk * indicates that the bolts are used for female-threaded parts that are made of soft materials such as casting, etc.

FLARE NUTS

N·m (kg·m / lb·ft)

Pipe diameter mm (in)	Torque	Pipe diameter mm (in)	Torque
4.76 (0.187)	16 (1.6 / 12)	10.00 (0.394)	54 (5.5 / 40)
6.35 (0.250)	26 (2.7 / 20)	12.00 (0.472)	88 (9.0 / 65)
8.00 (0.315)	44 (4.5 / 33)	15.00 (0.591)	106 (10.8 / 78)

SPECIAL PARTS FIXING NUTS AND BOLTS

kg·m(lb·ft/N·m)

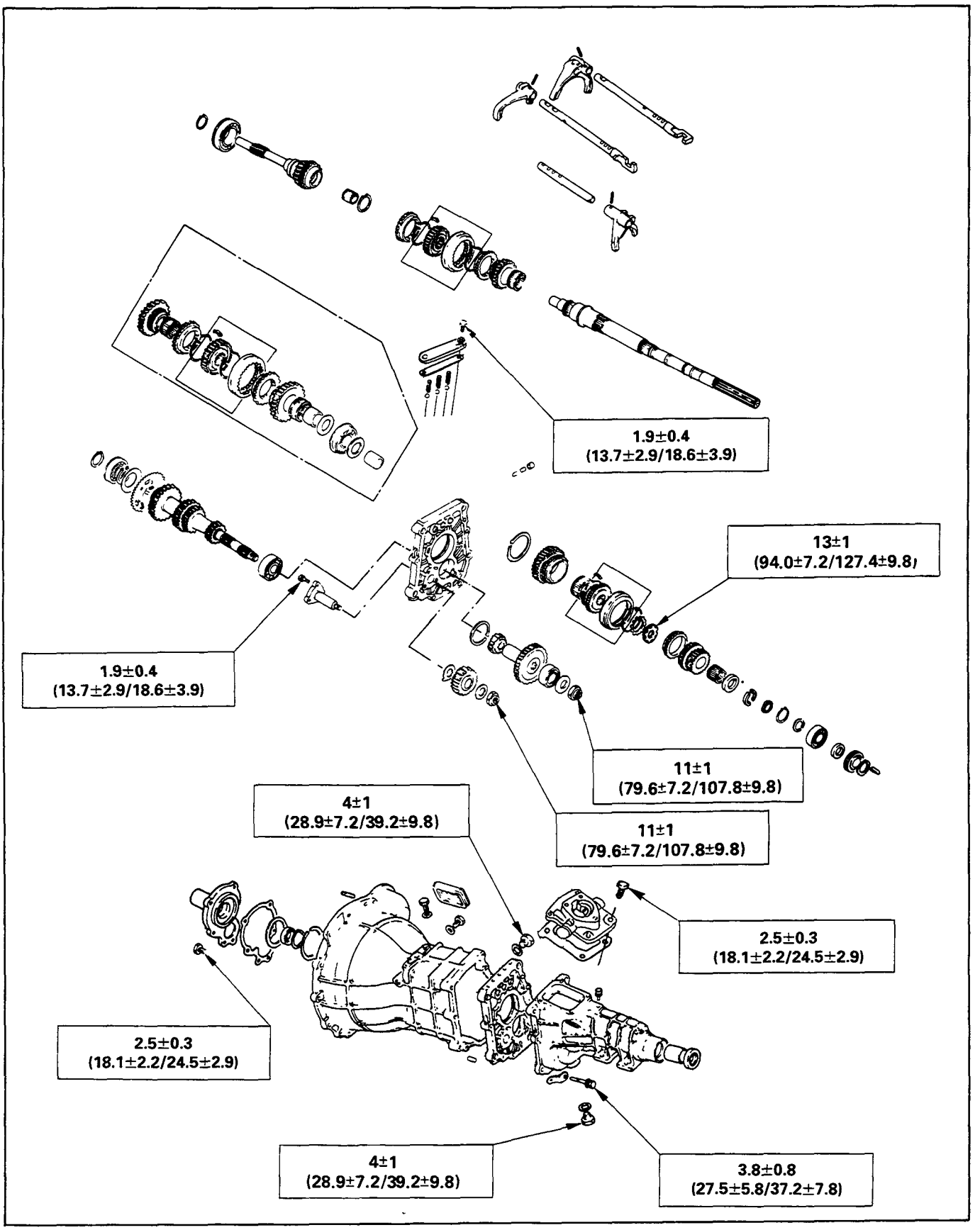

REPAIR KIT

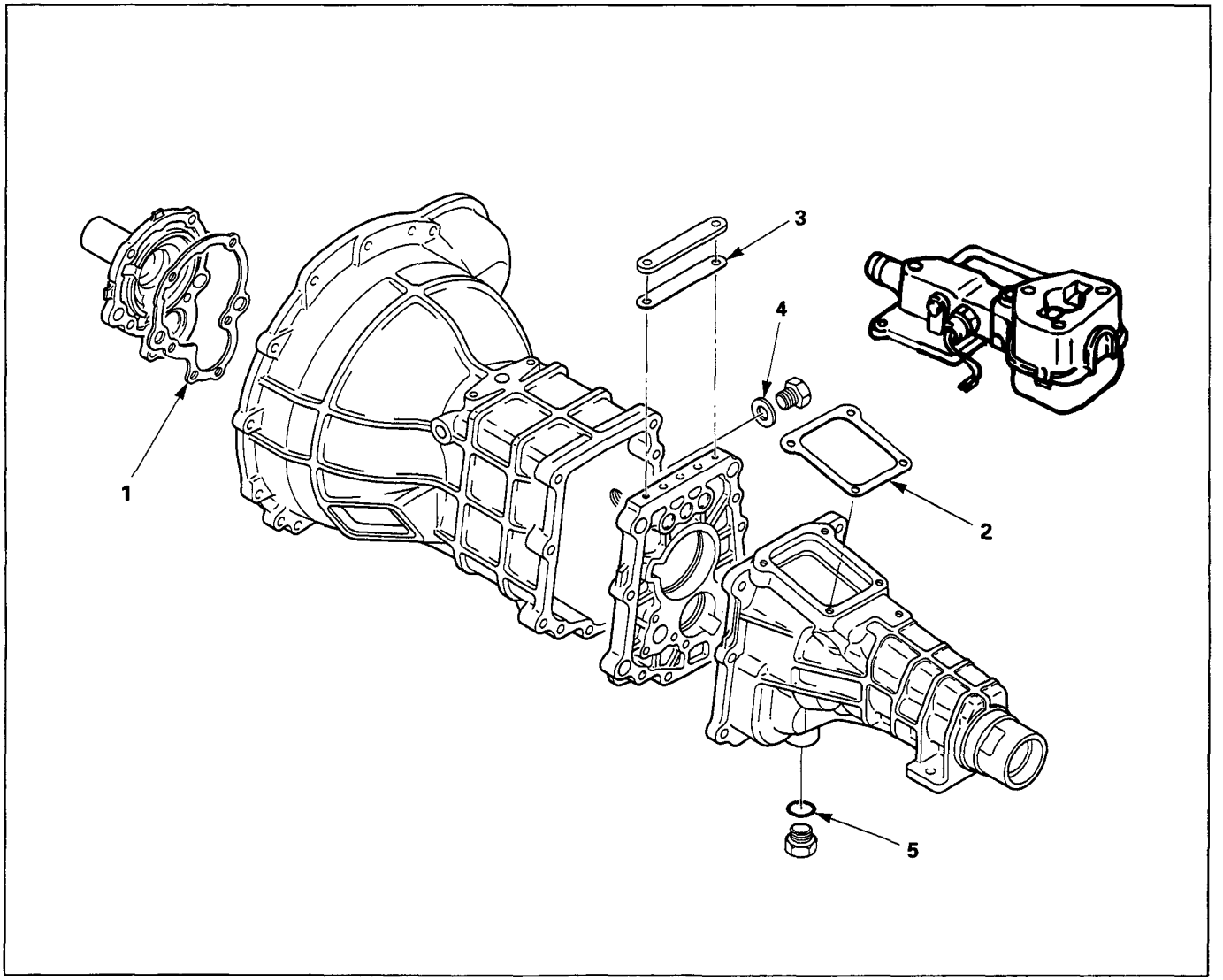

1. Case to front cover gasket
2. Control box gasket
3. Plate gasket
4. Filler plug O-ring
5. Drain plug O-ring

REMOVAL AND INSTALLATION

Read this Section carefully before performing any removal and installation procedure. This Section gives you important points as well as the order of operation. Be sure that you understand everything in this Section before you begin.

Important Operations — Removal

Battery Cable

Disconnect the negative (–) cable from the battery terminal.

Engine Hood

Apply setting marks to the engine hood and the engine hood hinges before removing the engine hood.

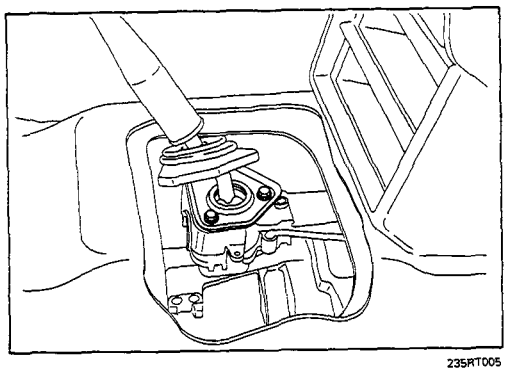

235RT005

Gear Shift Lever

1. Place the gear shift lever in the neutral position.
2. Remove the gear shift lever knob.
3. Remove the front console assembly.
4. Remove the gear shift lever grommet and dust cover.
5. Remove the gear shift lever cover bolts.
6. Remove the gear shift lever.

Note:

Cover the shift lever hole to prevent the entry of foreign material into the transmission.

Lifting the Vehicle

1. Jack up the vehicle.
2. Place chassis stands at the front and the rear of the vehicle.

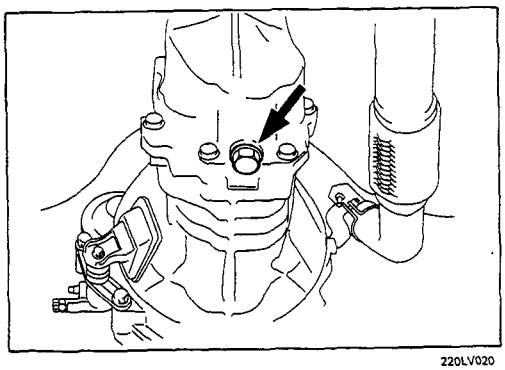

220LV020

Transmission Oil Draining

1. Remove the transmission oil drain plug.
2. Replace the drain plug after draining the oil.

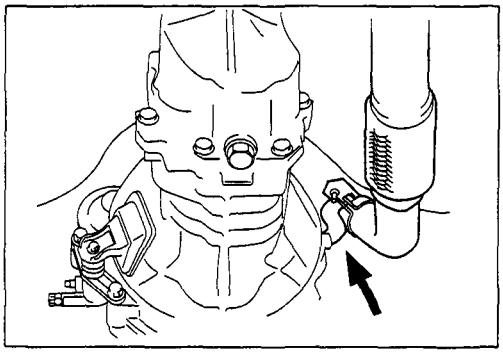

220LV022

Exhaust Pipe

1. Remove the exhaust pipe bracket from the transmission case.
2. Remove the exhaust pipe.

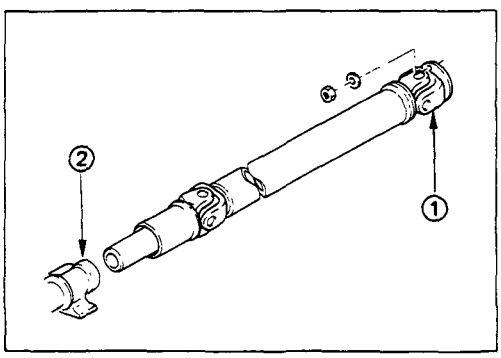

Rear Propeller Shaft (Single Shaft Type)

1. Remove the propeller shaft flange yoke at the drive pinion side ①.
2. Remove the propeller shaft from the transmission main shaft spline ②.

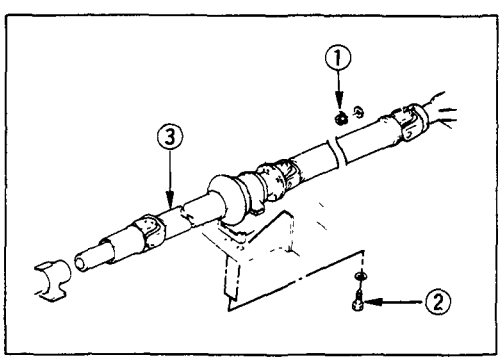

Rear Propeller Shaft (Dual Shaft Type)

1. Apply setting marks to the 2nd propeller shaft flange yoke.
   This will prevent mispositioning during the installation procedure.
2. Remove the 2nd propeller shaft flange yoke bolts at the drive pinion side ①.
3. Remove the center bearing retainer bolts ②.
4. Remove the 1st propeller shaft with the center bearing and the 2nd propeller shaft.
   Pull the 1st propeller shaft toward the rear of the vehicle until the spline yoke is free of the transmission main shaft.

Harness Connector

Disconnect the back up light switch connector and the speedometer sensor connector.

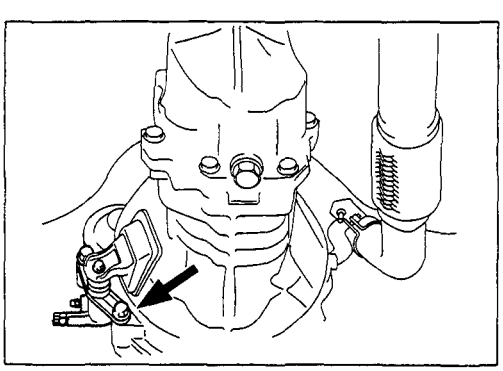

220LV021

Slave Cylinder

Remove the slave cylinder from the transmission case.

Engine Lifting Hanger

1. Attach the engine lifting hanger to the front portion of the engine.
2. Attach the lifting wire to both ends of the engine lifting hanger.

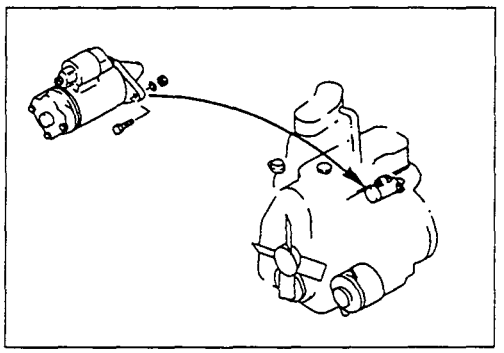

Starter Motor

Remove the starter motor from the engine rear plate.

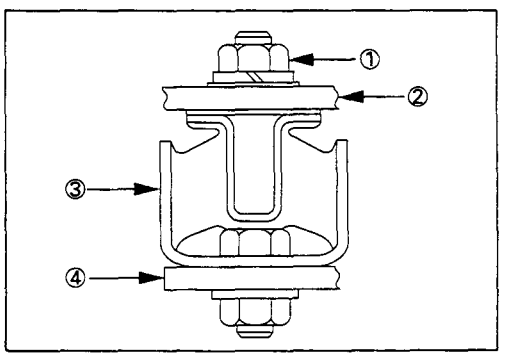

220LV001

Transmission

1. Support the transmission with a transmission jack.
2. Remove the engine rear mounting rubber nuts ① from the transmission ②.
3. Remove the rear mounting rubber ③ from the No. 3 crossmember ④.
4. Remove the gear control box from the transmission.

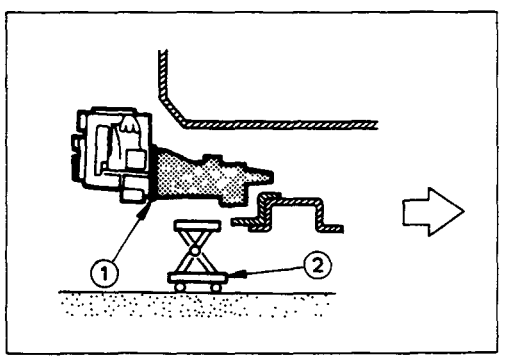

5. Remove the transmission from the engine.

   The removal of the transmission will require the cooperative efforts of two mechanics.

   1) Remove the transmission nuts and bolts ① from the engine rear plate.
   2) Place a transmission jack ② beneath the transmission.

      Do not raise the transmission jack.

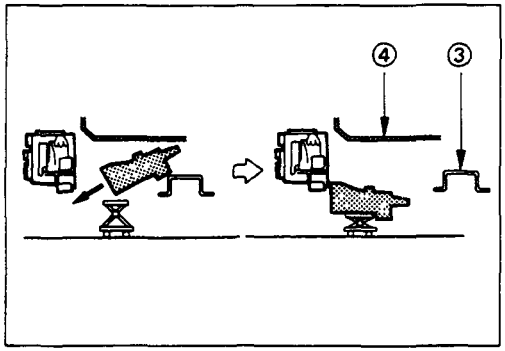

3) Manually move the transmission as far as possible toward the rear of the vehicle (into the space between the No. 3 crossmember ③ and the floor panel ④.

4) Lower the clutch housing end of the transmission toward the transmission jack.

   The rear of the transmission is supported by the No. 3 crossmember at this time.

5) Firmly grasp the transmission rear cover (1st mechanic).

   Raise the transmission jack toward the transmission (2nd mechanic).

   Carefully lower the transmission onto the transmission jack.

   The transmission must be centered on the transmission jack.

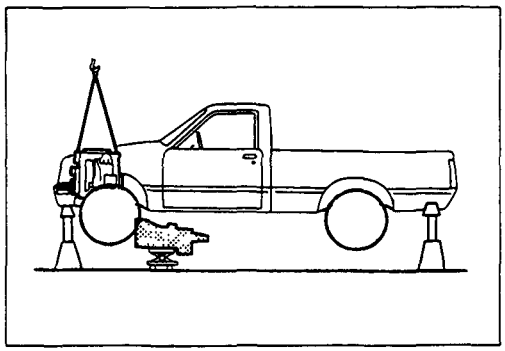

6. Carefully pull the transmission jack with the transmission from beneath the vehicle.

Important Operations — Installation

Follow the removal procedure in the reverse order to perform the installation procedure. Pay careful attention to the important points during the installation procedure.

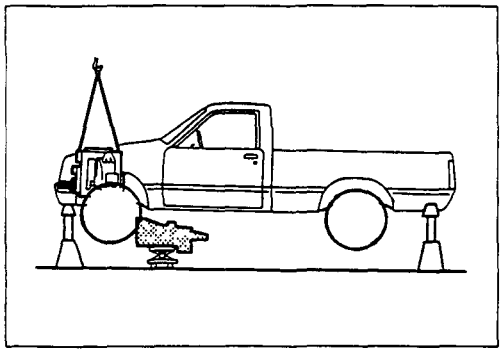

Transmission

1. Apply a thin coat of molybdenum disulfide grease to the top gear shaft spline.
2. Place the transmission on a transmission jack.
3. Carefully move the transmission jack and transmission into position behind the engine.

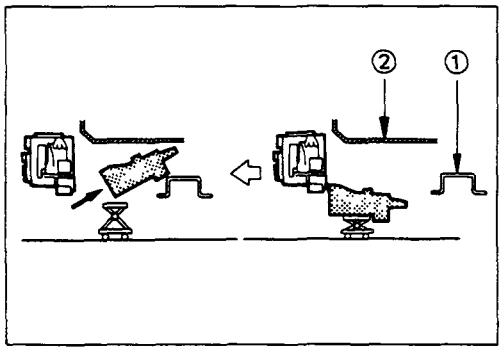

4. Slowly operate the transmission jack to raise the transmission until the rear of the transmission is at the same level as the No. 3 crossmember ①.
5. Manually support the transmission rear cover.

   Move the transmission into position between the No. 3 crossmember and the floor panel ②.

6. Slowly raise the transmission jack until the front of the transmission is aligned with the rear of the engine.

   The slope of the engine and the transmission must be the same.
7. Install the gear control box to the transmission.
8. Align the top gear shaft spline with the clutch drive plate spline.
9. Install the transmission to the engine.

   Tighten the transmission nuts and bolts to the specified torque.

Transmission Nut and Bolt Torque	kg·m(lb·ft/N·m)
M10 : 4.1 ± 1.0 (30 ± 7.2 / 40 ± 10)	
M12 : 8.0 ± 1.6 (58 ± 12 / 78 ± 16)	

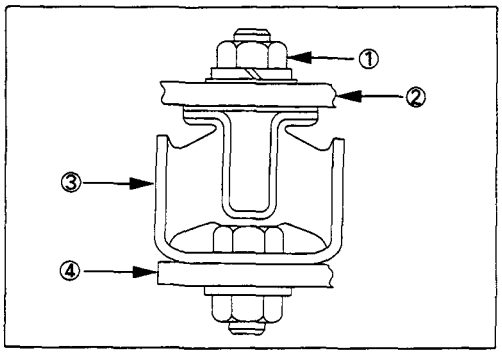

220LV001

10. Install the rear mounting rubber ③ to the transmission ②.
    Install the rear mounting rubber ③ to the No. 3 crossmember ④.
11. Tighten the rear mounting rubber nuts ① to the specified forque.

Rear Mounting Rubber Nut Torque	kg·m(lb·ft/N·m)
4.2 ± 0.5 (30 ± 3.6 / 41 ± 4.9)	

Mounting Bolt Torgue	kg·m(lb·ft/N·m)
4.2 ± 0.5 (30 ± 3.6 / 41 ± 4.9)	

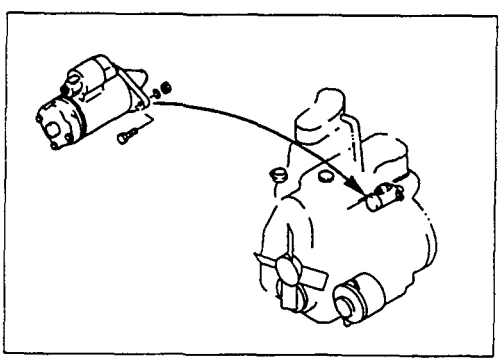

Starter Motor

1. Install the starter motor to the engine rear plate.
2. Tighten the starter motor bolts to the specified torque.

Starter Motor Bolt Torque	kg·m(lb·ft/N·m)
8.0 ± 1.6 (58 ± 12 / 78 ± 16)	

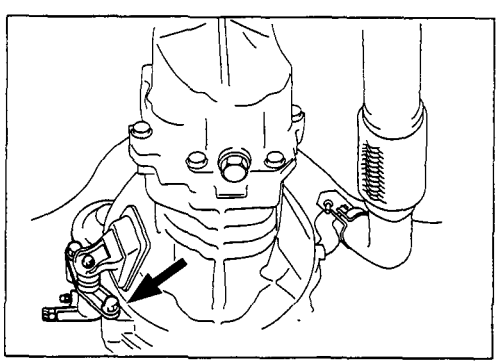
220LV021

Slave Cylinder

Install the slave cylinder to the transmission case.

Slave Cylinder Bolt Torque	kg•m (lb•ft/N•m)
8.0 ± 1.6 (58 ± 12 / 78 ± 16)	

Harness Connector

Connect the back up light switch connector and speedometer sensor connector.

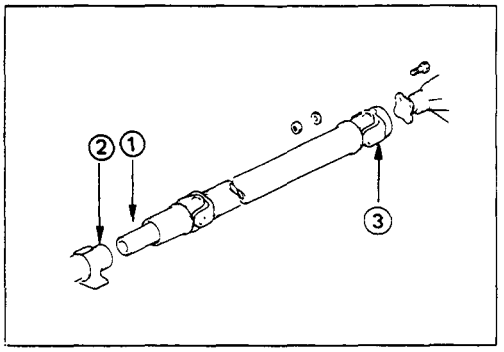

Rear Propeller Shaft (Single Shaft Type)

1. Insert the splined yoke ① with the propeller shaft into the transmission main shaft spline ②.
2. Install the propeller shaft flange yoke ③ to the drive pinion side.
3. Tighten the propeller shaft flange yoke bolt to the specified torque.

Propeller Shaft Flange Yoke Bolt Torque kg·m(lb·ft/N·m)
M8 : 3.6 ± 0.3 (26.0 ± 2.2 / 35.3 ± 2.94)
M10 : 6.4 ± 0.4 (46.3 ± 2.9 / 62.7 ± 3.9)

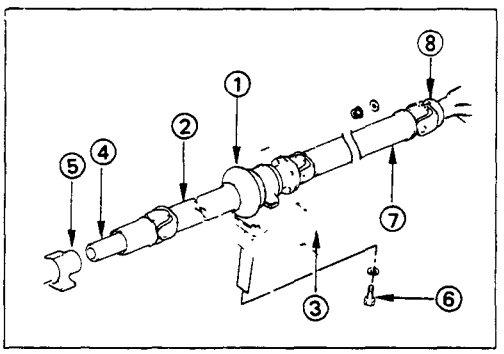

Rear Propeller Shaft (Dual Shaft Type)

1. Place the center bearing and retainer ① together with the 1st propeller shaft ② and 2nd propeller shaft ⑦ on the No. 4 crossmember ③.
2. Insert the splined yoke ④ into the transmission main shaft spline ⑤.
3. Tighten the center bearing retainer bolts ⑥ to the specified torque.

Center Bearing Retainer Bolt Torque kg·m(lb·ft/N·m)
6.2 ± 1.2 (44.8 ± 8.7 / 60.8 ± 11.8)

4. Connect the 2nd propeller shaft ⑦ and drive pinion side ⑧.

   Be sure to align the setting marks applied at disassembly.
5. Tighten the coupling bolts to the specified torque.

Propeller Shaft Flange Yoke Bolt Torque kg·m(lb·ft/N·m)
M8 : 3.6 ± 0.3 (26.0 ± 2.2 / 35.3 ± 2.94)
M10 : 6.4 ± 0.4 (46.3 ± 2.9 / 62.7 ± 3.9)

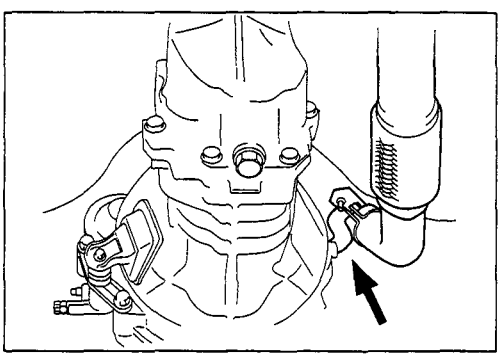

220LV022

Exhaust Pipe

1. Install the exhaust pipe to the exhaust manifold and the 2nd exhaust pipe.
2. Install the exhaust pipe bracket to the transmission case.

Gear Shift Lever

1. Replenish the transmission case with the specified engine oil.

Transmission Case Oil	lit (US gal.)
1.55(0.41)	

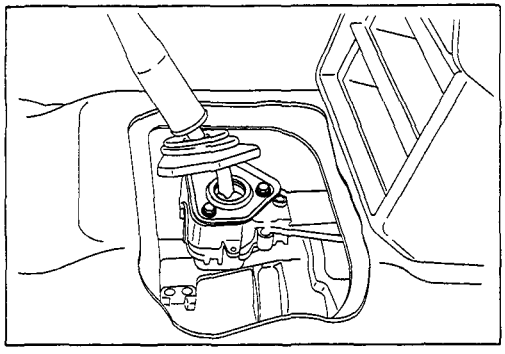

235RT005

2. Install the gear shift lever to the gear control box.
3. Tighten the gear shift lever cover bolts to the specified torque.

Shift Lever Cover Bolt Torque	kg·m(lb·ft/N·m)
2.0 ± 0.2 (14.5 ± 1.5/19.6 ± 1.96)	

4. Install the dust cover and the grommet.
5. Install the front console assembly.
6. Install the gear shift lever knob.

Lowering the Vehicle

1. Place a jack beneath the vehicle.
2. Raise the jack to remove the chassis stands.
3. Lower the vehicle to the ground.

Engine Hood

Align the setting marks(applied at removal)on the engine hood and the engine hood hinges to install the engine hood.

Battery Cable

Connect the negative (–) cable to the battery terminal.

DISASSEMBLY

MAJOR COMPONENTS

EXTERNAL PARTS

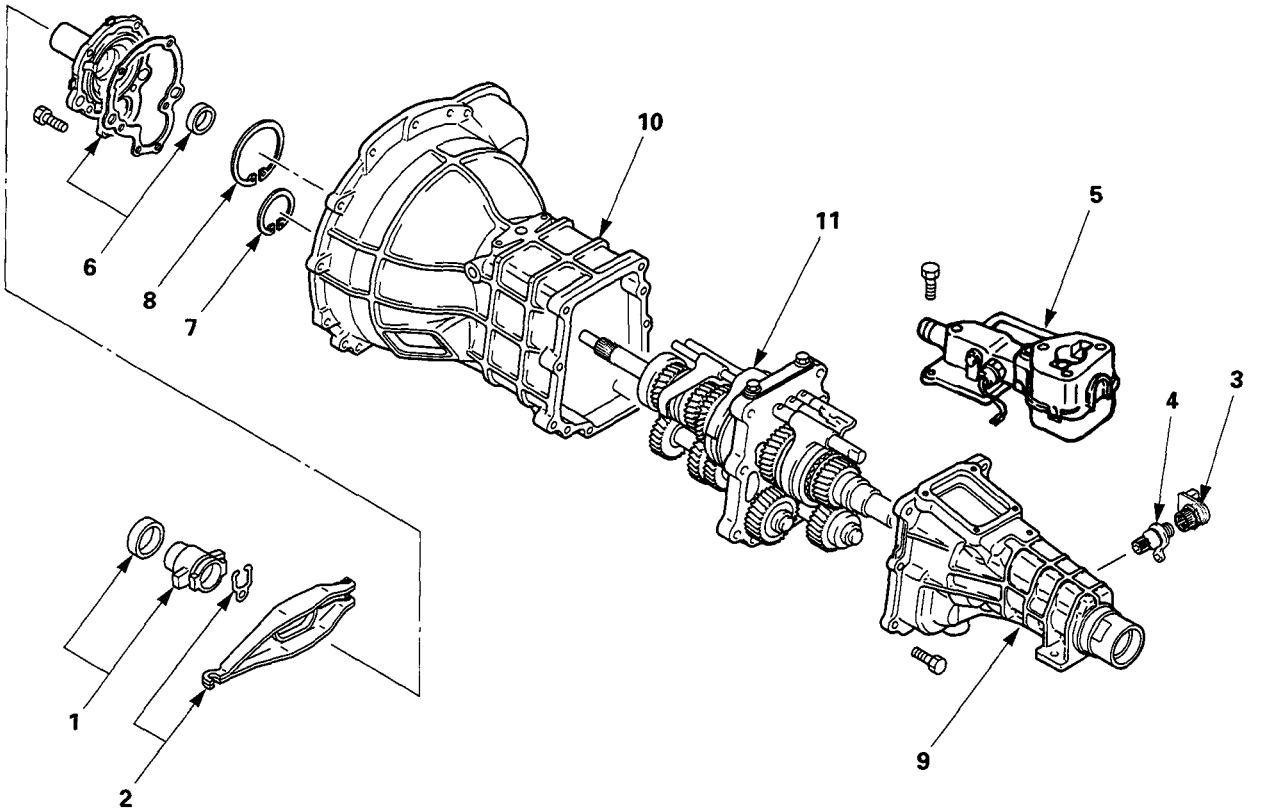

220LV007

Disassembly Steps

1. Clutch shift block and release bearing
2. Clutch shift fork
3. Speedometer sensor
4. Speedometer driven gear assembly
5. Gear control box assembly
▲ 6. Front cover with oil seal
▲ 7. Counter gear snap ring
▲ 8. Bearing snap ring
9. Rear cover with oil seal
10. Transmission case
11. Intermediate plate with gear assembly

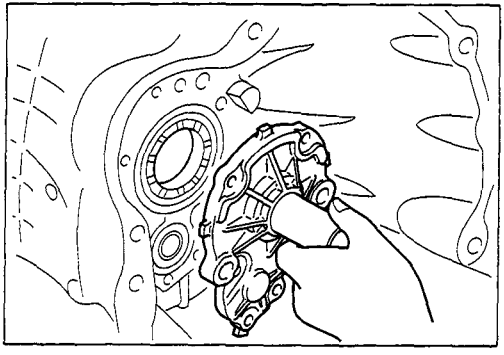

220LV012

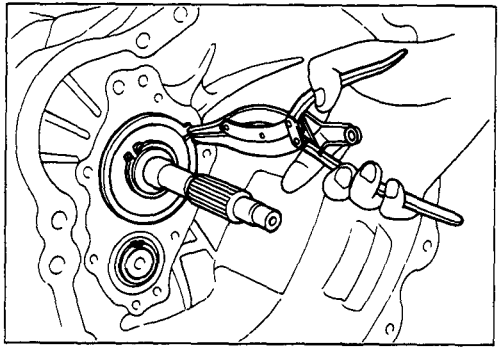

Important Operations

6. Front Cover with Oil Seal

Remove the front cover with oil seal from the transmission case.

7. Counter Gear Snap Ring
8. Bearing Snap Ring

Use a pair of snap ring pliers to remove the snap ring.

MAJOR COMPONENT

INTERNAL PARTS

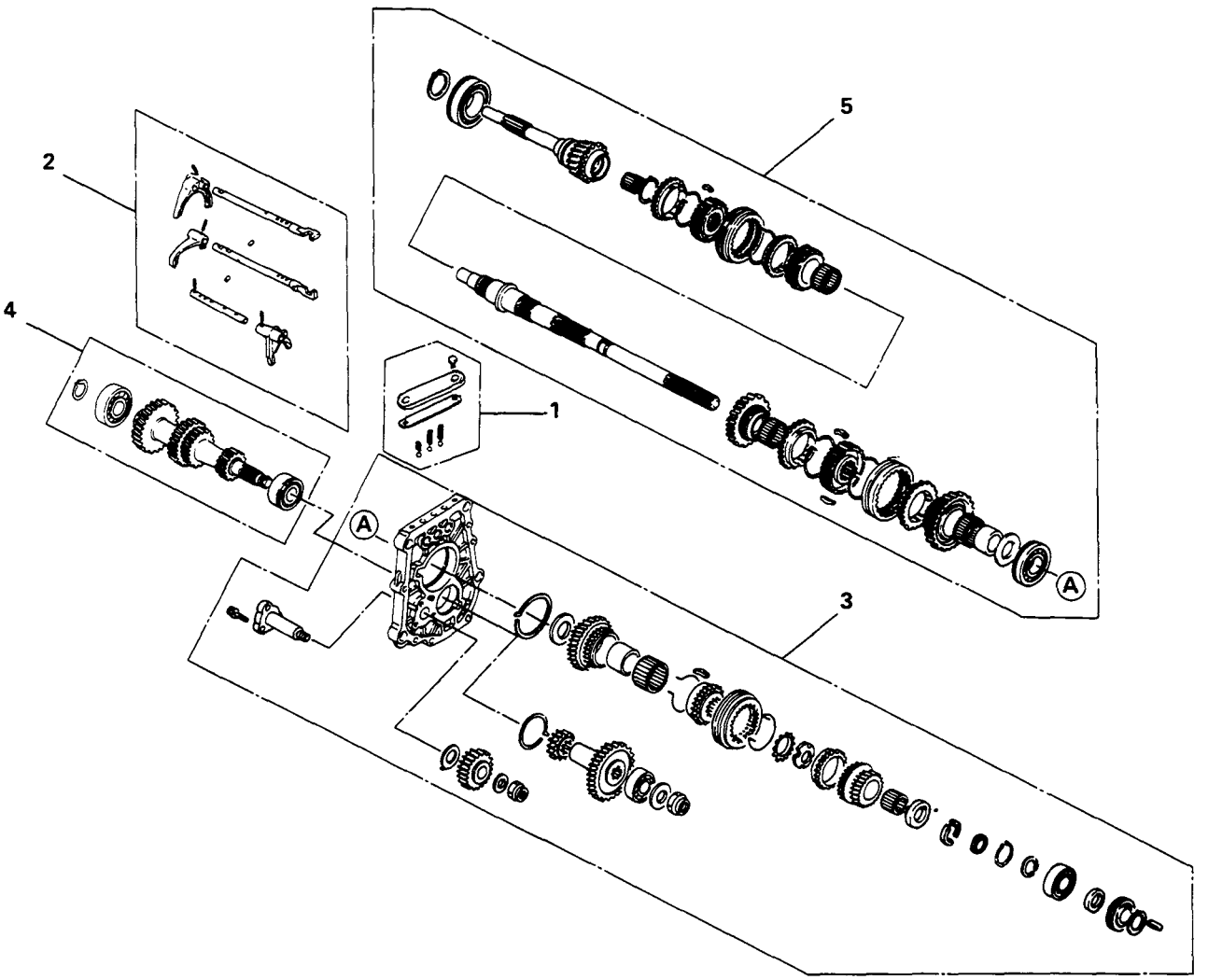

Disassembly steps

1. Detent assembly
2. Shift fork assembly & interlock pin
3. Rev. and 5th gear assembly
4. Counter gear shaft assembly
5. Top & main gear shaft assembly

MINOR COMPONENTS

DETENT, SHIFT ARM ASSEMBLY AND INTERLOCK PIN

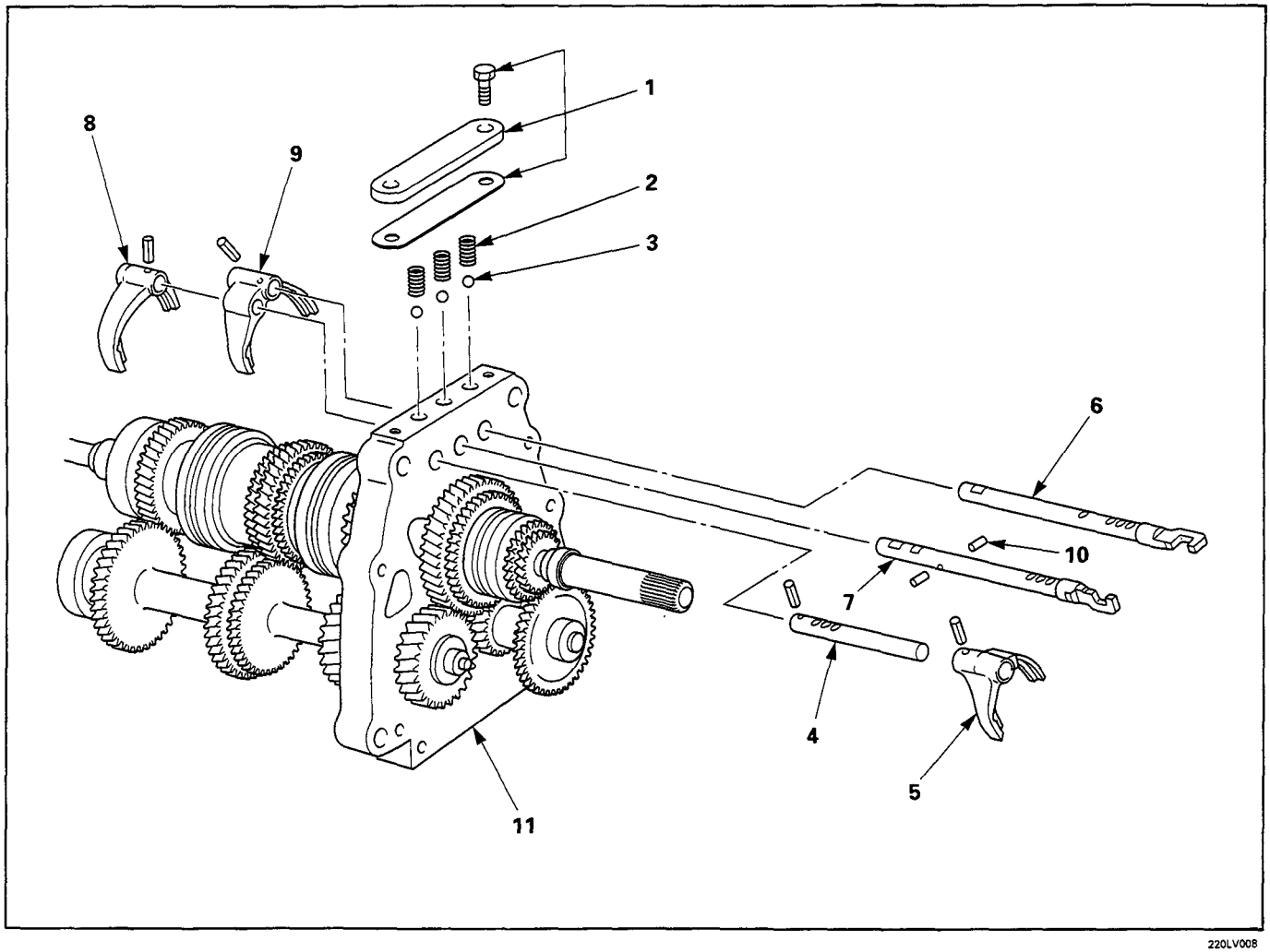

220LV008

Disassembly Steps

1. Detent spring plate and gasket
2. Detent spring
3. ▲ Detent ball
4. Rev.—5th shaft rod
5. Rev.—5th shaft arm
6. 1st—2nd shift rod
7. ▲ 3rd—4th shift rod
8. ▲ 3rd—4th shift arm
9. ▲ 1st—2nd shift arm
10. Interlock pin
11. Intermediate plate and gear assembly

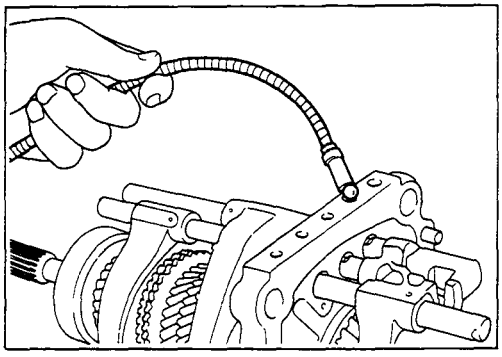

Important Operations

3. Detent Ball

Use a magnetic hand to remove the detent balls from the intermediate plate.

Take care not to lose the detent balls.

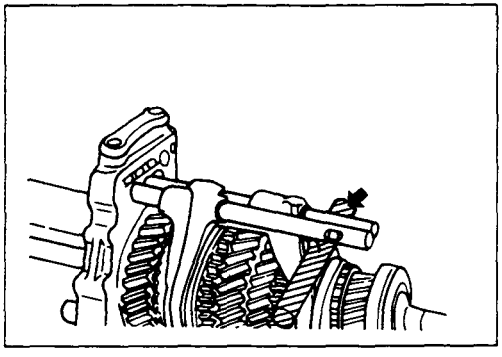

7. 3rd—4th Shift Rod
8. 3rd—4th Shift Arm
9. 1st—2nd Shift Arm

1) Hold a round bar against the shift arm end.
   This will prevent damage to other components.

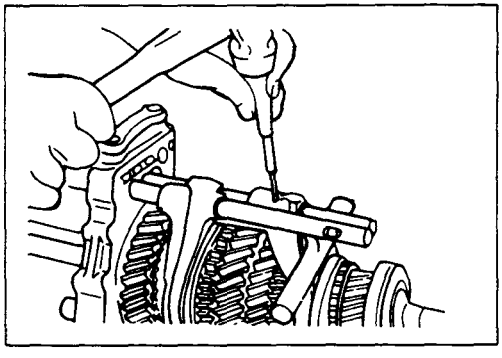

2) Use a spring pin remover to remove the shift arm spring pin from the shift arm and the shift rod.
   Spring Pin Remover : 9-8529-2201-0
   Discard the used spring pin.
3) Move the 3rd—4th shift rod forward.
   Take care not to lose the interlock pins.

REVERSE GEAR AND 5TH GEAR

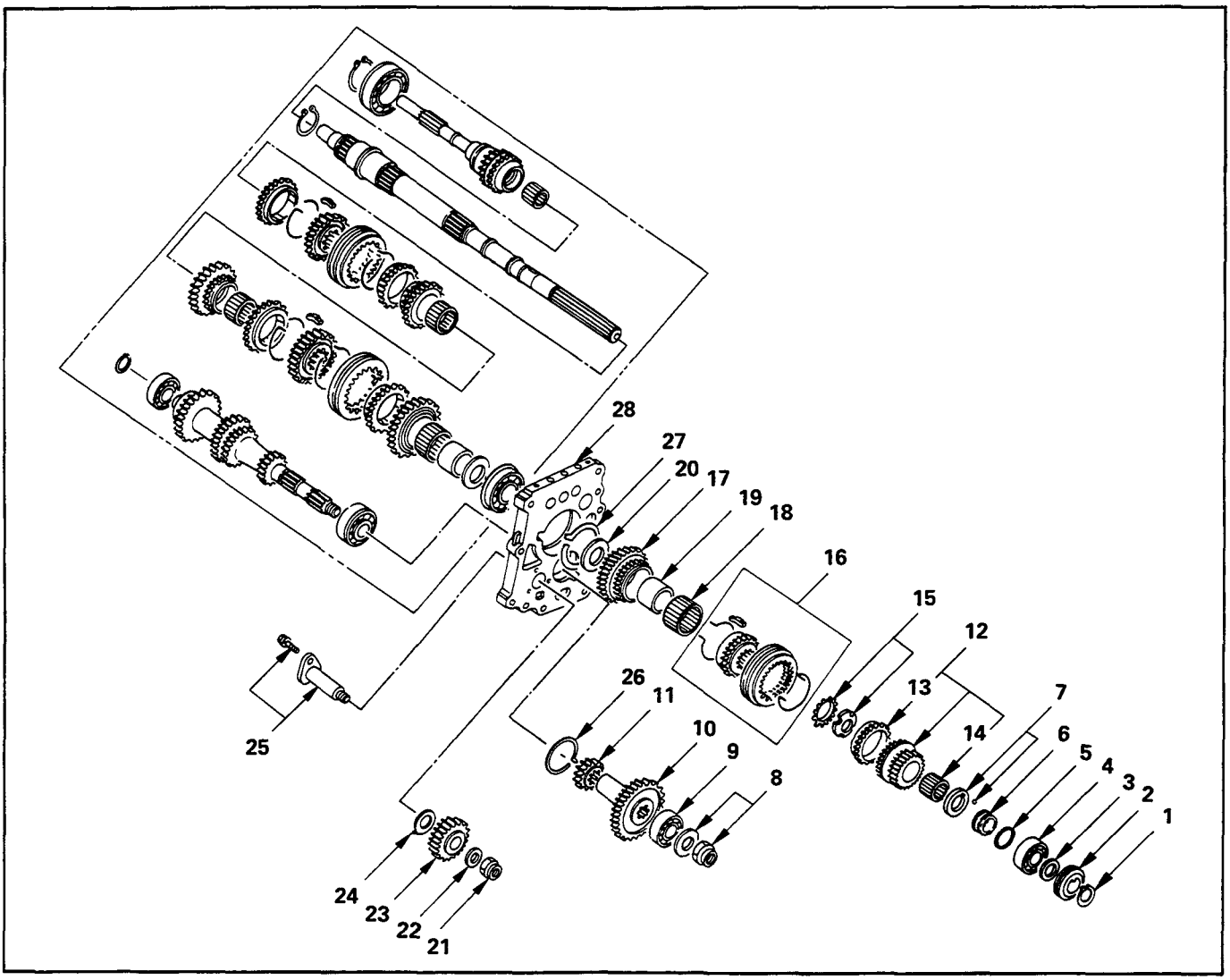

Disassembly Steps

1. Bearing snap ring
2. Speedometer drive gear and lock ball
3. Bearing spacer
4. Mainshaft end ball bearing
5. Thrust ring snap ring
6. Thrust washer thrust ring
7. Thrust washer and lock ball
8. Counter reverse gear nut and washer
▲ 9. Counter end ball bearing
▲ 10. Counter 5th gear
11. Counter reverse gear
12. 5th gear
13. 5th block ring
14. Needle bearing
▲ 15. Mainshaft lock nut and washer
▲ 16. Rev.—5th synchronizer assembly
17. Reverse gear
18. Needle bearing
19. Needle bearing collar
20. Thrust washer
21. Counter reverse gear lock nut
22. Thrust washer
23. Reverse idler gear
24. Thrust washer
25. Reverse idler shaft
▲ 26. Bearing snap ring
▲ 27. Bearing snap ring
▲ 28. Intermediate plate

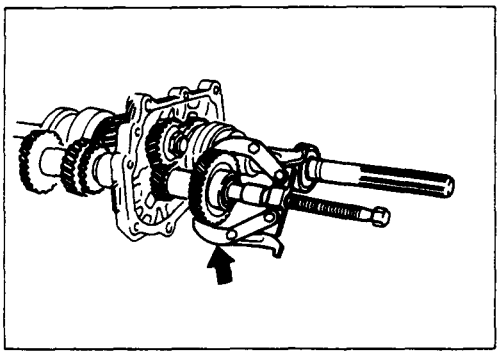

Important Operations

9. Counter End Ball Bearing

10. Counter 5th Gear

Use the gear remover to remove the counter 5th gear with the ball bearing.

Gear Remover : 5-8840-0013-0 (J-22888)

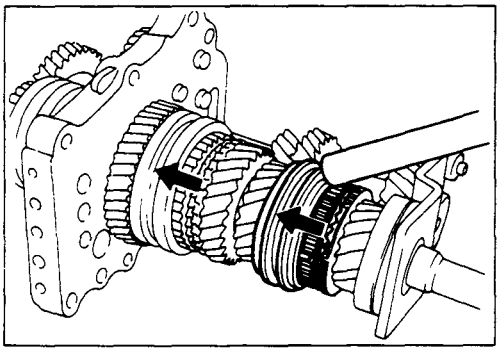

15. Mainshaft Lock Nut and Washer

1) Engage the 3rd—4th synchronizer with the 3rd gear.
2) Engage the 1st—2nd synchronizer with the 1st gear.
3) Attach the holding fixture to the mainshaft and the countergear.

   Holding Fixture : 5-8840-2001-0 (J-29768)

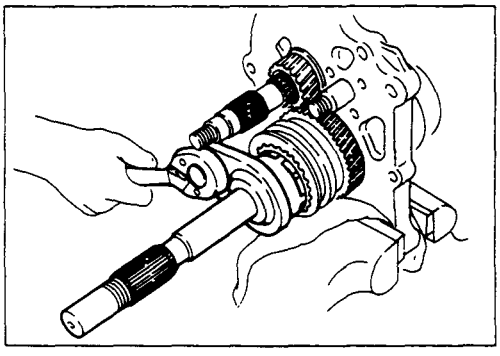

4) Use the lock nut wrench to remove the lock nut.

   Lock Nut Wrench: 5-8840-0353-0 (J-36629)

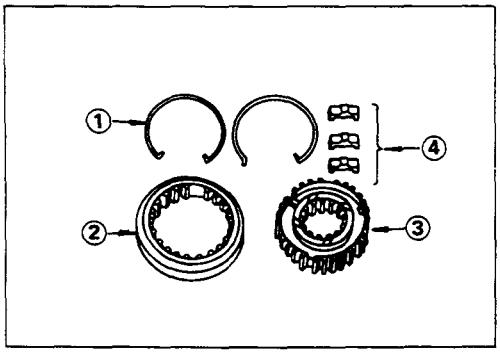

16. Rev.—5th Synchronizer Assembly

1) Remove the synchronizer assembly as a set.
2) Disassemble the synchronizer assembly.

   ① Springs
   ② Sleeve
   ③ Clutch Hub
   ④ Inserts

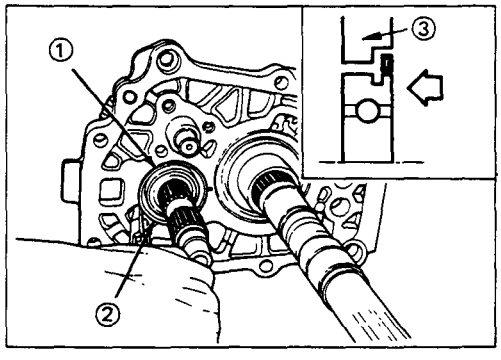

26. Bearing Snap Ring

1) Insert the snap ring pliers ① into the counter gear bearing snap ring hole ②.

   The snap ring hole is in the intermediate plate ③.
2) Use the snap ring pliers to force open the counter gear bearing snap ring.

   Tap on the front of the intermediate plate.

   The ball bearing snap ring will come free.

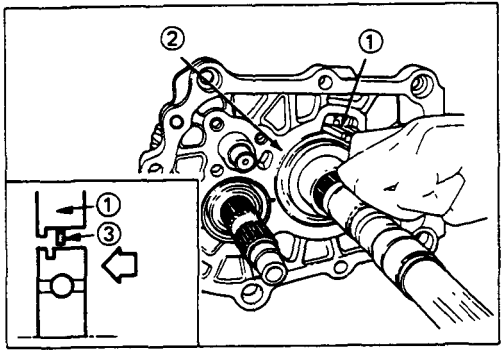

27. Bearing Snap Ring

28. Intermediate Plate

1) Insert the snap ring pliers into the mainshaft bearing snap ring hole.

   The snap ring hole is in the intermediate plate ①.

2) Use the snap ring pliers ② to force open the mainshaft bearing snap ring ③.

   Hold the snap ring open with the pliers.

3) Push the intermediate plate toward the rear of the transmission to remove it.

   The ball bearing snap ring will come free.

TOP GEAR SHAFT, MAINSHAFT GEAR AND COUNTER GEAR

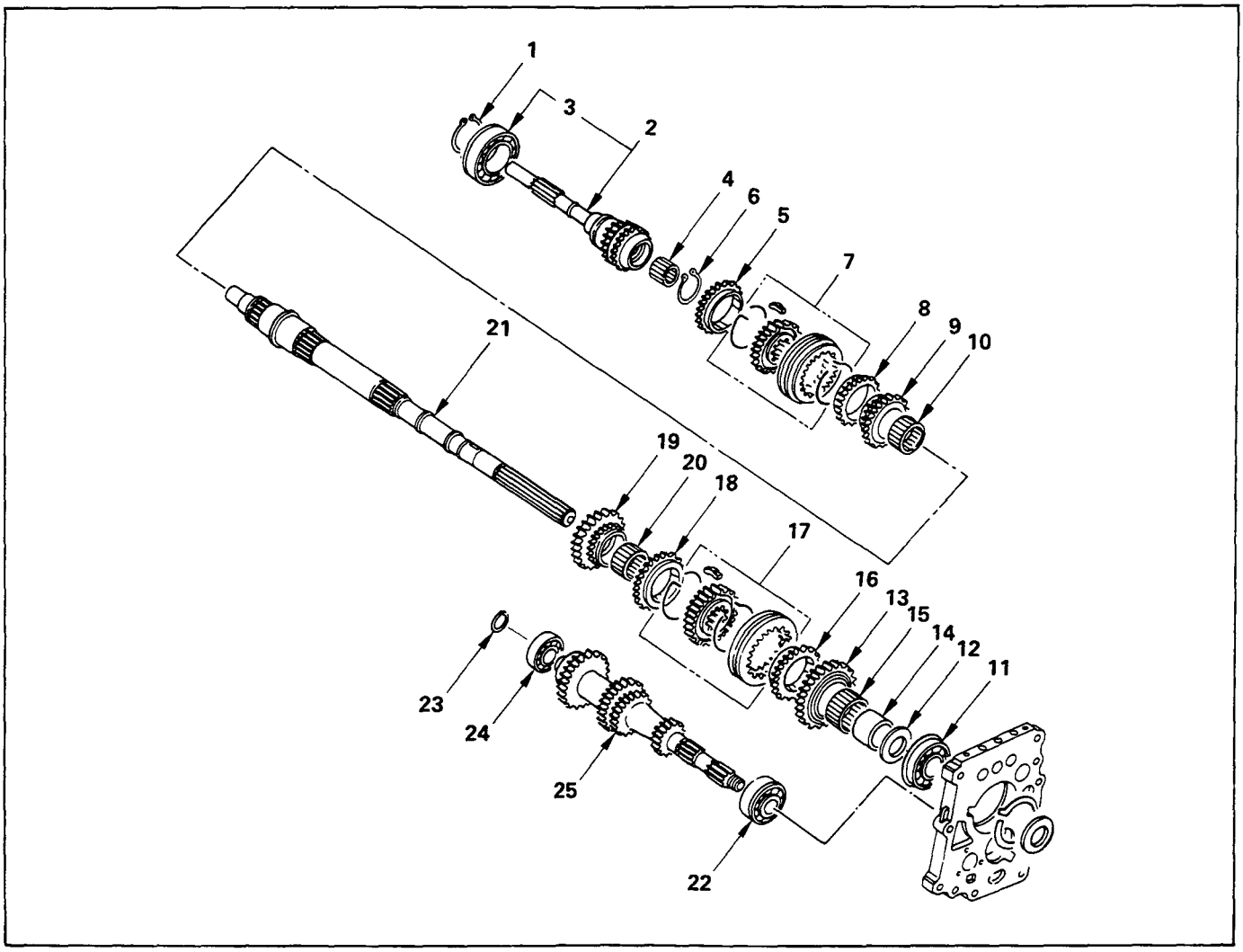

Disassembly Steps

- ▲ 1. Top gear shaft snap ring
- ▲ 2. Top gear shaft
- ▲ 3. Ball bearing
- 4. Needle bearing
- 5. 4th block ring
- 6. Mainshaft snap ring
- ▲ 7. 3rd—4th synchronizer assembly
- 8. 3rd block ring
- 9. 3rd gear
- 10. Needle bearing
- ▲ 11. Mainshaft ball bearing
- 12. 1st gear thrust washer
- 13. 1st gear
- 14. Needle bearing collar
- 15. Needle bearing
- 16. 1st block ring
- ▲ 17. 1st—2nd synchronizer assembly
- 18. 2nd block ring
- 19. 2nd gear
- 20. Needle bearing
- 21. Mainshaft
- ▲ 22. Rear ball bearing
- 23. Bearing snap ring
- ▲ 24. Front ball bearing
- 25. Counter gear

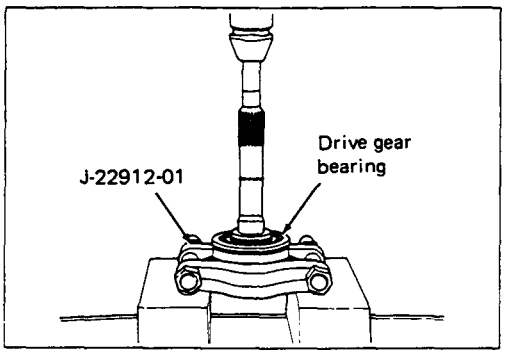

Important Operations

1. Top Gear Shaft Snap Ring

2. Top Gear Shaft

3. Ball Bearing

1) Use a pair of snap ring pliers to remove the snap ring.
2) Use a bench press and the bearing remover to remove the ball bearing.

Bearing Remover : 5-8840-0015-0 (J-22912-01)

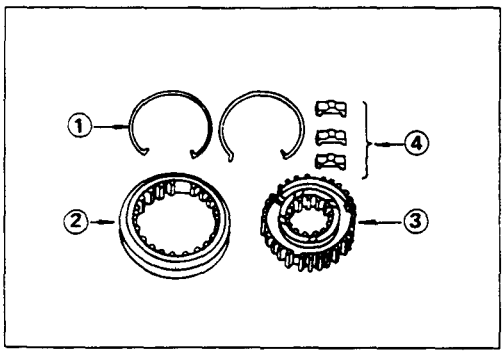

7. 3rd—4th Synchronizer Assembly

1) Remove the synchronizer assembly as a set.
2) Disassembly the synchronizer assembly.

① Springs
② Sleeve
③ Clutch Hub
④ Inserts

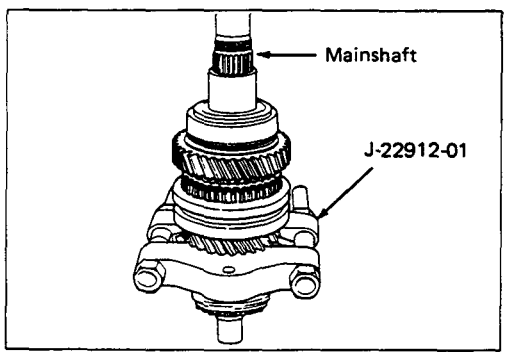

11. Mainshaft Ball Bearing

Use a bench press and the bearing remover to remove the ball bearing.

Bearing Remover : 5-8840-0015-0 (J-22912-01)

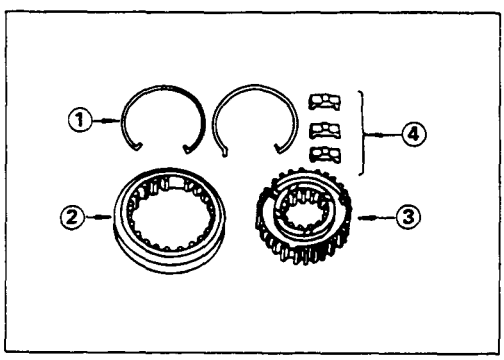

17. 1st—2nd Synchronizer Assembly

1) Remove the synchronizer assembly as a set.
2) Disassembly the synchronizer assembly.

① Springs
② Sleeve
③ Clutch Hub
④ Inserts

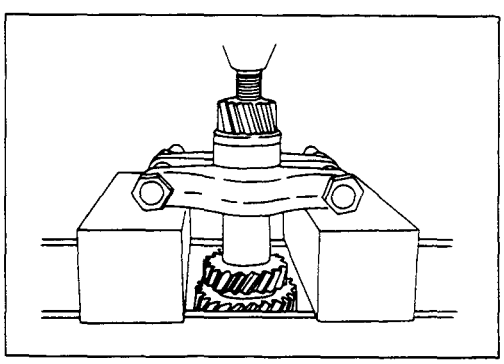

22. Rear Ball Bearing

24. Front Ball Bearing

Use a bench press and the bearing remover to remove the ball bearing.

Bearing Removar : 5-8840-0015-0 (J-22912-01)

INSPECTION AND REPAIR

Make the necessary adjustments, repairs, and part replacements if excessive wear or damage is discovered during inspection.

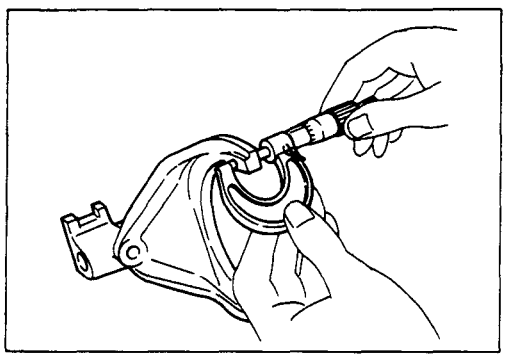

SHIFT ARM THICKNESS

Use a micrometer to measure the shift arm thickness.
If the measured value is less than the specified limit, the shift arm must be replaced.

Shift Arm Thickness — mm(in)

	Standard	Limit
1st–2nd	9.6–9.8 (0.378–0.386)	9.0 (0.354)
3rd–4th	6.95–7.2 (0.273–0.283)	6.5 (0.256)
Rev.–5th	6.8–6.9 (0.268–0.272)	6.3 (0.248)

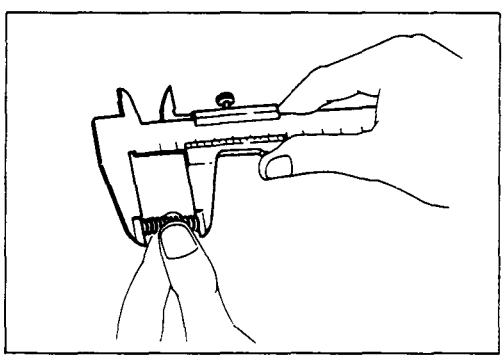

DETENT SPRING FREE LENGTH

Use a venier caliper to measure the detent spring free length.

If the measured value is less than the specified limit, the detent spring must be replaced.

Detent Spring Free Length — mm(in)

Standard	Limit
25.6 (1.01)	23.6 (0.93)

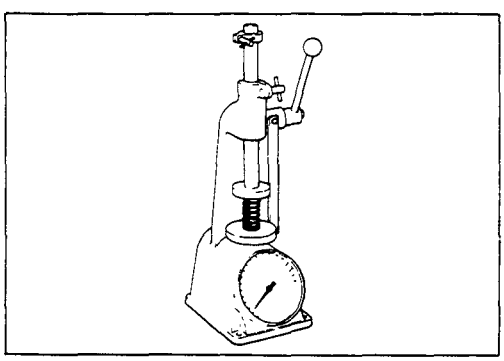

DETENT SPRING TENSION

Use a spring tester to measure the valve spring tension.

If the measured value is less than the specified limit, the valve spring must be replaced.

Valve Spring Tension — kg(lb/N)

Compressed Height mm(in)	Standard	Limit
22.1 (0.870)	6.3–6.7 (13.9—14.8 / 61.8—65.7)	5.7 (12.6/55.9)

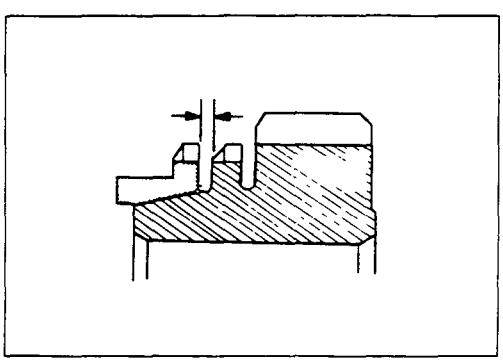

BLOCK RING AND DOG TEETH CLEARANCE

Use a thickness gauge to measure the clearance between the block ring and the dog teeth.

If the measured value exceeds the specified limit, the block ring must be replaced.

Block Ring and Dog Teeth Clearance — mm(in)

	Standard	Limit
1st, 2nd	2.0 (0.078)	1.3 (0.051)
3rd, 4th, 5th	1.5 (0.059)	0.8 (0.032)

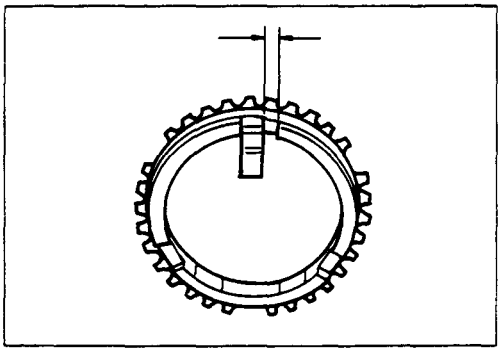

BLOCK RING AND INSERT CLEARANCE

Use a thickness gauge to measure the clearance between the block ring and the insert.

If the measured value exceeds the specified limit, the block ring and the insert must be replaced.

Block Ring and Insert Clearance — mm(in)

	Standard	Limit
1st, 2nd	3.46—3.74 (0.136—0.147)	4.0 (0.157)
3rd, 4th, 5th	3.51—3.79 (0.138—0.149)	

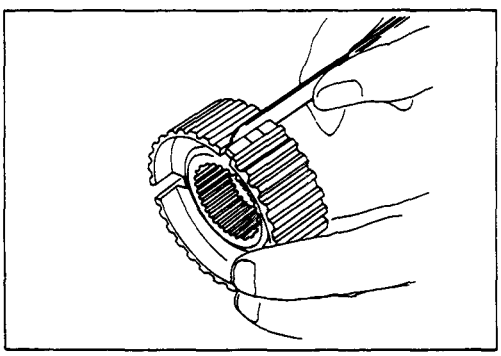

CLUTCH HUB AND INSERT CLEARANCE

Use a thickness gauge to measure the clearance between the clutch hub and the insert.

If the measured value exceeds the specified limit, the clutch hub and the insert must be replaced.

Clutch Hub and Insert Clearance — mm(in)

Standard	Limit
0.01 — 0.19 (0.0004 — 0.0075)	0.3 (0.012)

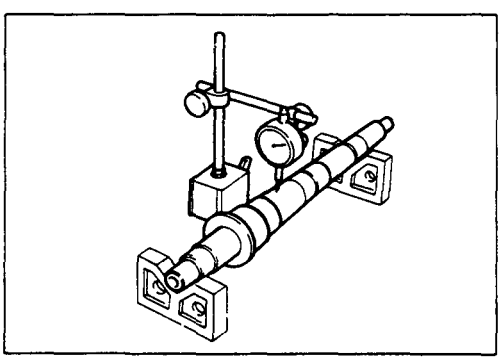

MAINSHAFT RUN-OUT

1. Install the mainshaft to a grinding machine.
2. Use a dial indicator to measure the mainshaft central portion run-out.

   If the measured mainshaft run-out exceeds the specified limit, the mainshaft must be replaced.

Mainshaft Run-Out — mm(in)

Limit
Less than 0.03 (0.0012)

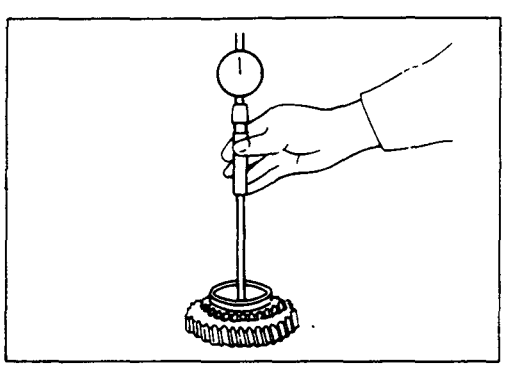

GEAR INSIDE DIAMETER

Use an inside dial indicator to measure the gear inside diameter.

If the measured value is less than the specified limit, the gear must be replaced.

Gear Inside Diameter — mm(in)

	Standard	Limit
1st Rev.	45.00–45.01 (1.7717—1.7720)	45.10 (1.7756)
2nd 3rd	41.00–41.01 (1.6142—1.6146)	41.10 (1.6181)
5th	34.03–34.04 (1.3398–1.3402)	34.10 (1.3425)

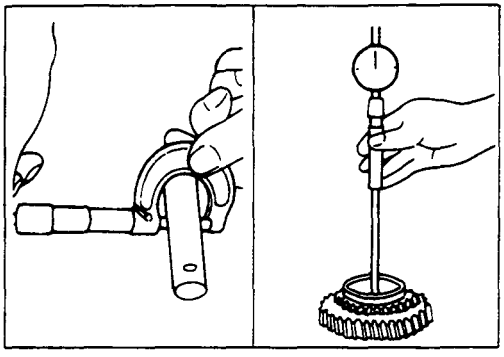

REVERSE IDLER GEAR AND IDLER GEAR SHAFT CLEARANCE

1. Use a micrometer to measure the idler gear shaft diameter.
2. Use an inside dial indicator to measure the idler gear inside diameter.
3. Calculate the idler gear and idler gear shaft clearance.

   Idler gear inside diameter – idler gear shaft diameter = idler gear and idler gear shaft clearance.

   If the measured value exceeds the specified limit, the idler gear and/or the idler gear shaft must be replaced.

Idler Gear and Idler Gear Shaft Clearance mm(in)

Standard	Limit
0.041 – 0.074 (0.0016 – 0.0029)	0.150 (0.0059)

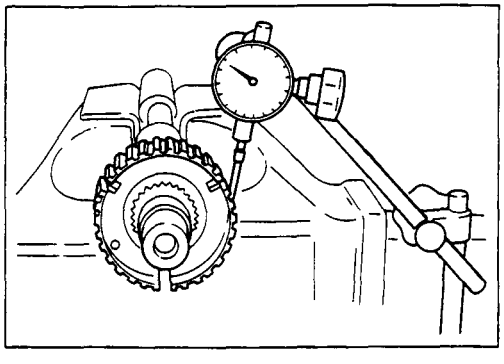

CLUTCH HUB SPLINE PLAY

1. Set a dial indicator to the clutch hub to be measured.
2. Move the clutch hub as far as possible to both the right and the left.

   Note the dial indicator reading.

   It the measured value exceeds the specified limit, the clutch hub must be replaced.

Clutch Hub Spline Play mm(in)

Standard	Limit
0 – 0.19 (0 – 0.0075)	0.20 (0.0079)

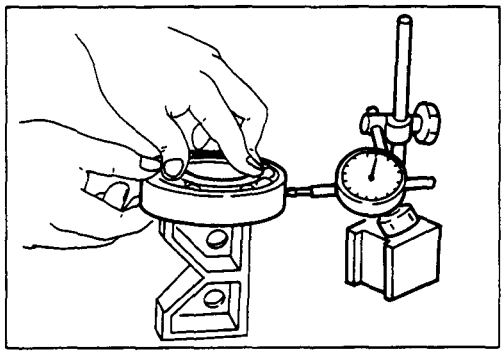

BALL BEARING PLAY

Use a dial indicator to measure the ball bearing play.

Ball Bearing Play	mm(in)
Limit	
0.2(0.0079)	

FRONT COVER OIL SEAL

Oil Seal Replacement

Oil Seal Removal

Use a screwdriver to pry the oil seal from the front cover.

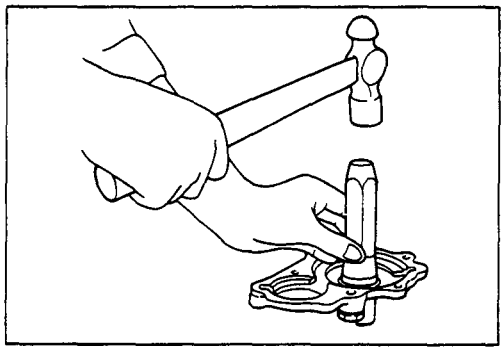

Oil Seal Installation

1. Use the oil seal installer to install the oil seal to the front cover.
   Oil Seal Installer : 5-8840-0026-0 (J-26540)
2. Apply engine oil to the oil seal lip.

REAR COVER OIL SEAL

Oil Seal Replacement

Oil Seal Removal

Use a screwdriver to pry the oil seal from the rear cover.

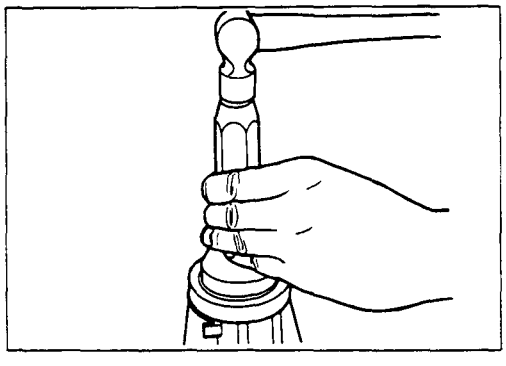

Oil Seal Installation

1. Use the oil seal installer to install the oil seal to the rear cover.
   Oil Seal Installer : 5-8522-0050-0 (J-29769)
2. Apply engine oil to the oil seal lip.

REASSEMBLY

MAJOR COMPONENT

INTERNAL PARTS

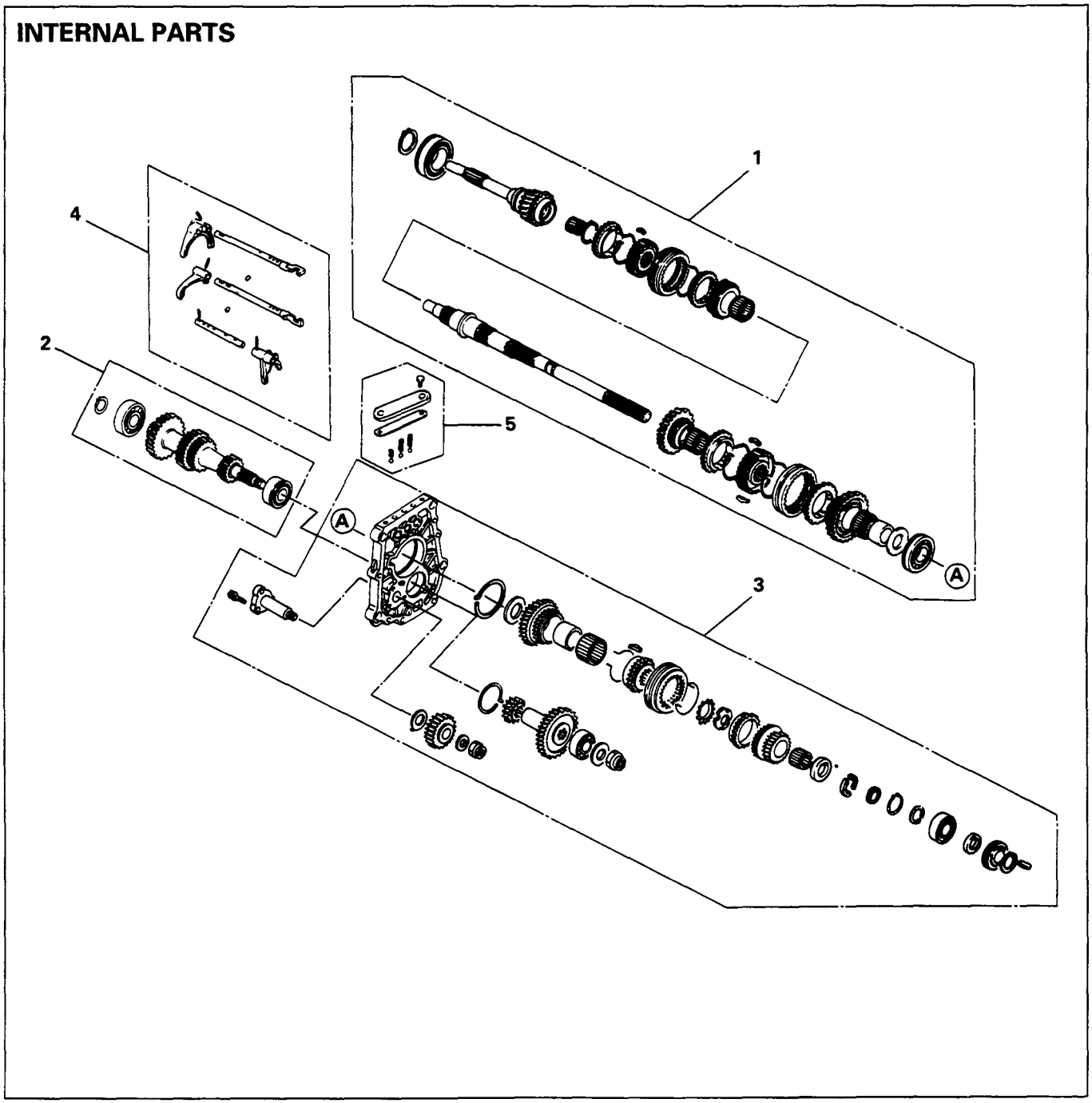

Reassembly steps

1. Top & main gear shaft assembly
2. Counter gear shaft assembly
3. Rev. and 5th gear assembly
4. Shift fork assembly & interlock pin
5. Detent assembly

MINOR COMPONENTS

TOP GEAR SHAFT, MAINSHAFT GEAR AND COUNTER GEAR

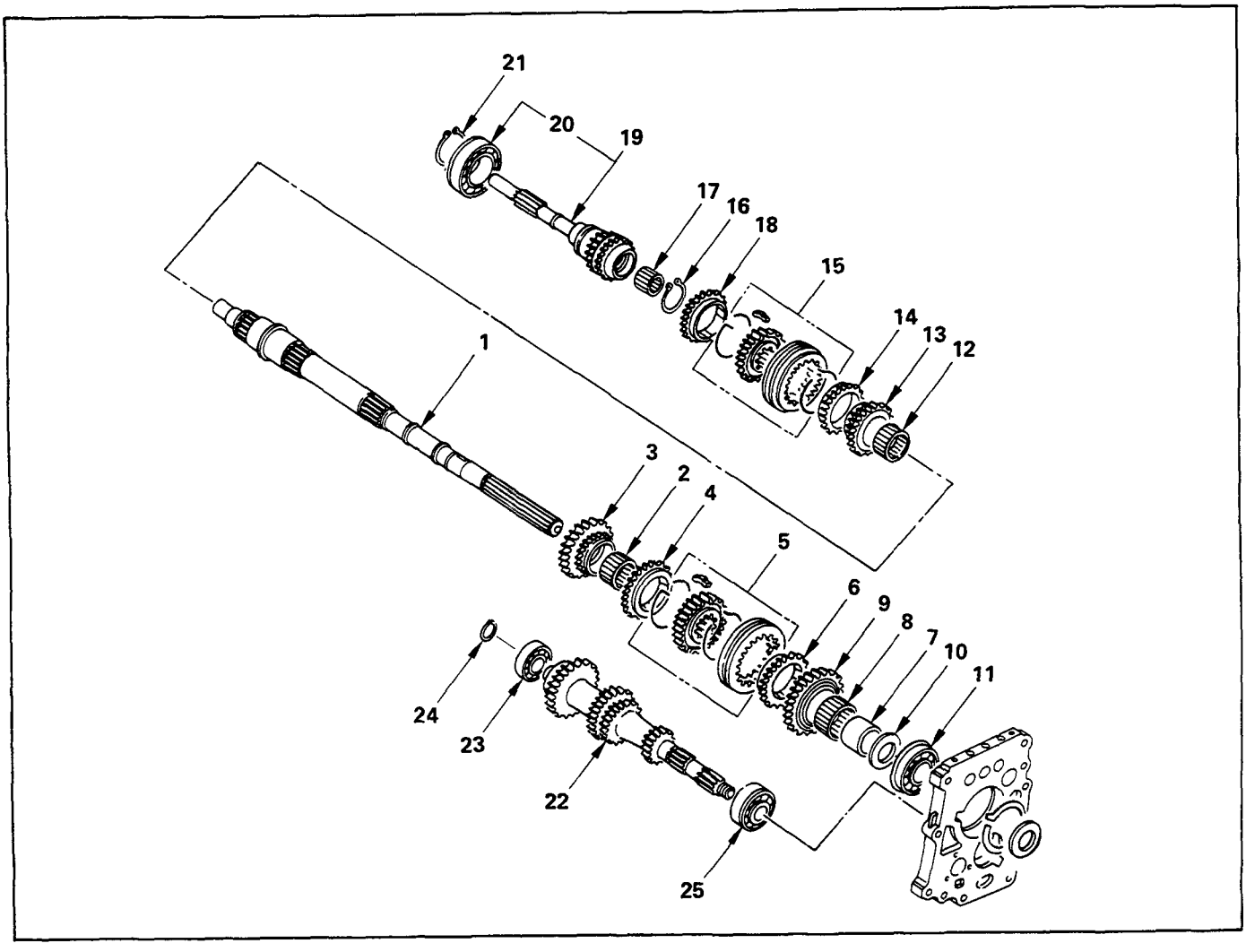

Reassembly Steps

1. Mainshaft
▲ 2. Needle bearing
▲ 3. 2nd gear
4. 2nd block ring
▲ 5. 1st—2nd synchronizer assembly
6. 1st block ring
▲ 7. Needle bearing collar
▲ 8. Needle bearing
▲ 9. 1st gear
▲ 10. 1st gear thrust washer
▲ 11. Mainshaft ball bearing
▲ 12. Needle bearing
▲ 13. 3rd gear
14. 3rd block ring
▲ 15. 3rd—4th synchronizer assembly
▲ 16. Mainshaft snap ring
17. Needle bearing
18. 4th block ring
▲ 19. Top gear shaft
▲ 20. Ball bearing
21. Top gear shaft snap ring
22. Counter gear
23. Front ball bearing
24. Bearing snap ring
▲ 25. Rear ball bearing

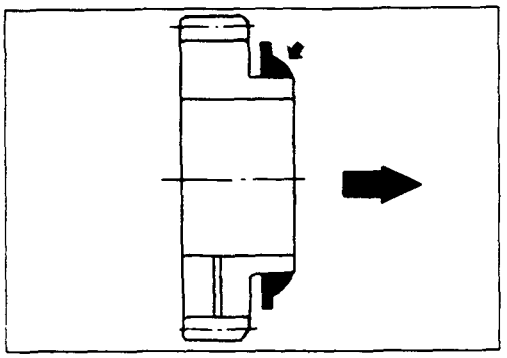

Important Operations

2. Needle Bearing

3. 2nd Gear

1) Apply the engine oil to the 2nd needle bearing and the 2nd gear.
2) Install the needle bearing and the 2nd gear to the mainshaft.
   The dog teeth of the 2nd gear must be facing the rear side of the transmission.

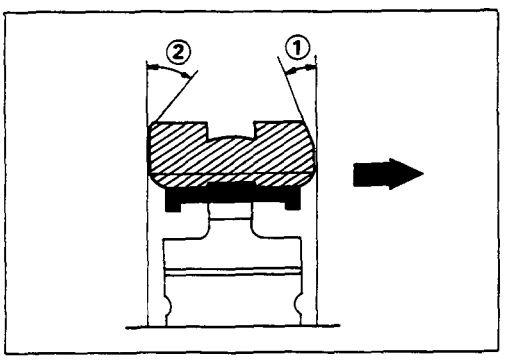

5. 1st—2nd Synchronizer Assembly

1) Apply the engine oil to the clutch hub spline.
2) Install the synchronizer assembly to the mainshaft.
   The outside sleeve heavy chamfering must be facing the rear of the transmission.
   ① Chamfer Angle = 30°
   ② Chamfer Angle = 45°

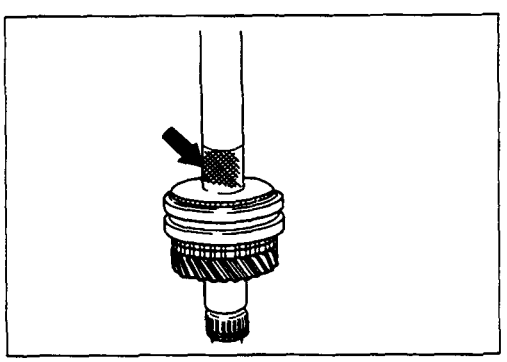

7. Needle Bearing Collar

Use a bench press and the collar installer to install the needle bearing collar.

Collar Installer : 5-8840-0178-0 (J-33851)

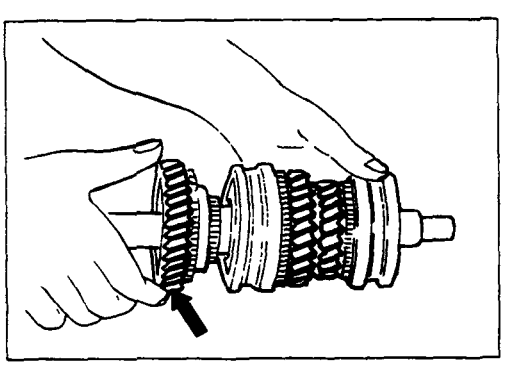

8. Needle Bearing

9. 1st Gear

1) Apply the engine oil to the 1st needle bearing and the 1st gear.
2) Install the needle bearing and the gear to the mainshaft.
   The dog teeth of the 1st gear must be facing the front side of the transmission.

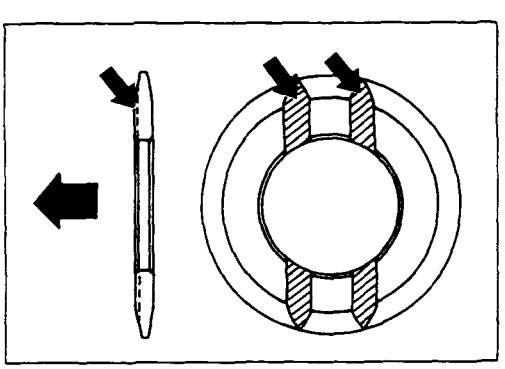

10. 1st Gear Thrust Washer

Install the thrust washer to the mainshaft.

The thrust washer oil groove must be facing the 1st gear side.

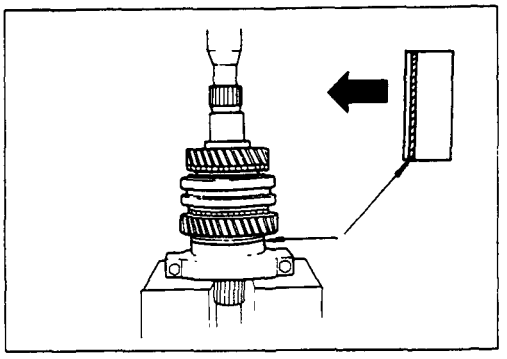

11. Mainshaft Ball Bearing

1) Apply the engine oil to the ball bearing inside circumference.
2) Use a bench press and the bearing installer to install the bearing.

   The bearing snap ring groove must be facing the front of the transmission.

   Bearing Installer : 5-8840-0015-0 (J-22912-01)

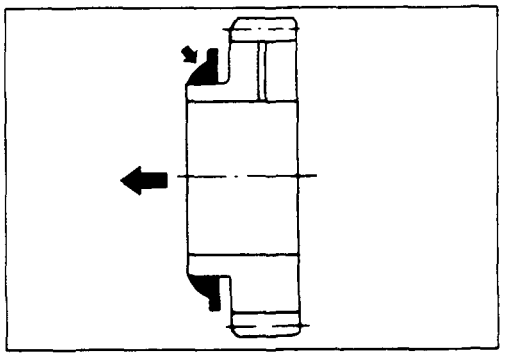

12. Needle Bearing

13. 3rd Gear

1) Apply the engine oil to the 3rd needle bearing and the 3rd gear.
2) Install the needle bearing and the gear to the mainshaft.

   The dog teeth of the 3rd gear must be facing the front side of the transmission.

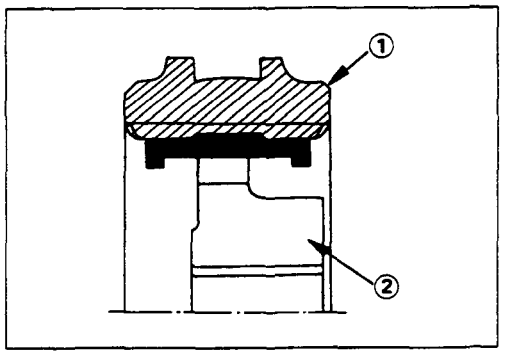

15. 3rd—4th Synchronizer Assembly

1) Apply the recommended lubricating oil to the clutch hub spline.
2) Install the synchronizer assembly to the mainshaft.

   The sleeve light chamfering ① and the clutch hub heavy boss ② must be facing the rear of the transmission.

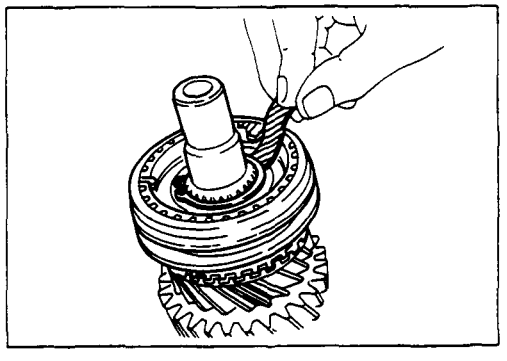

16. Mainshaft Snap Ring

1) Select the snap ring which will provide the minimum clearance between the mainshaft and the snap ring.

   There are four snap ring sizes available.

   The snap rings are numbered to indicate their thickness.

Mainshaft and Snap Ring Clearance — mm(in)

Standard
0 – 0.05 (0.002)

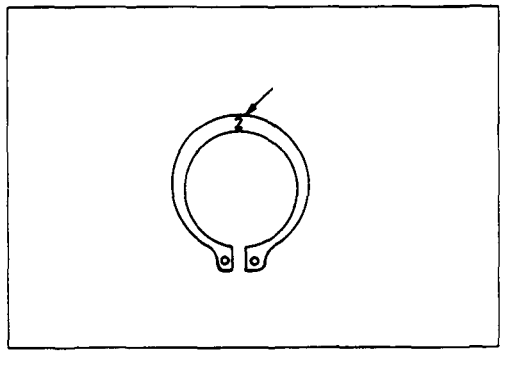

Snap Ring Availability — mm(in)

Thickness	Identification Number
1.50 (0.059)	1
1.55 (0.061)	2
1.60 (0.063)	3
1.65 (0.065)	4

2) Use a pair of snap ring pliers to install the snap ring to the mainshaft.

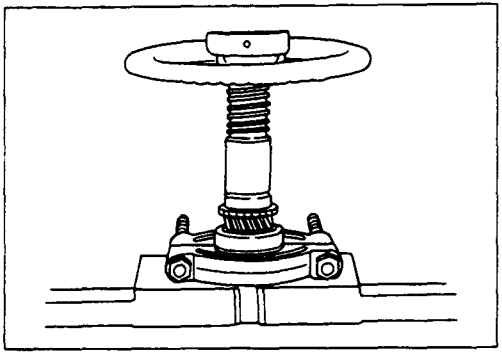

19. Top Gear Shaft

20. Ball Bearing

Use a bench press and the installer to install the ball bearing to the top gear shaft.

The snap ring groove must be facing the front of the transmission.

Bearing Installer : 5-8840-0015-0 (J-22912-01)

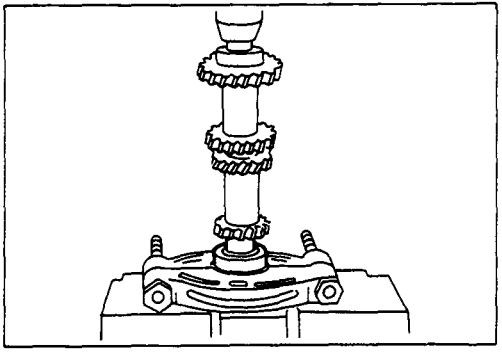

25. Rear Ball Bearing

Use a bench press and the bearing installer to install the bearing to the counter gear.

Bearing Installer : 5-8840-0015-0 (J-22912-01)

REVERSE GEAR AND 5TH GEAR

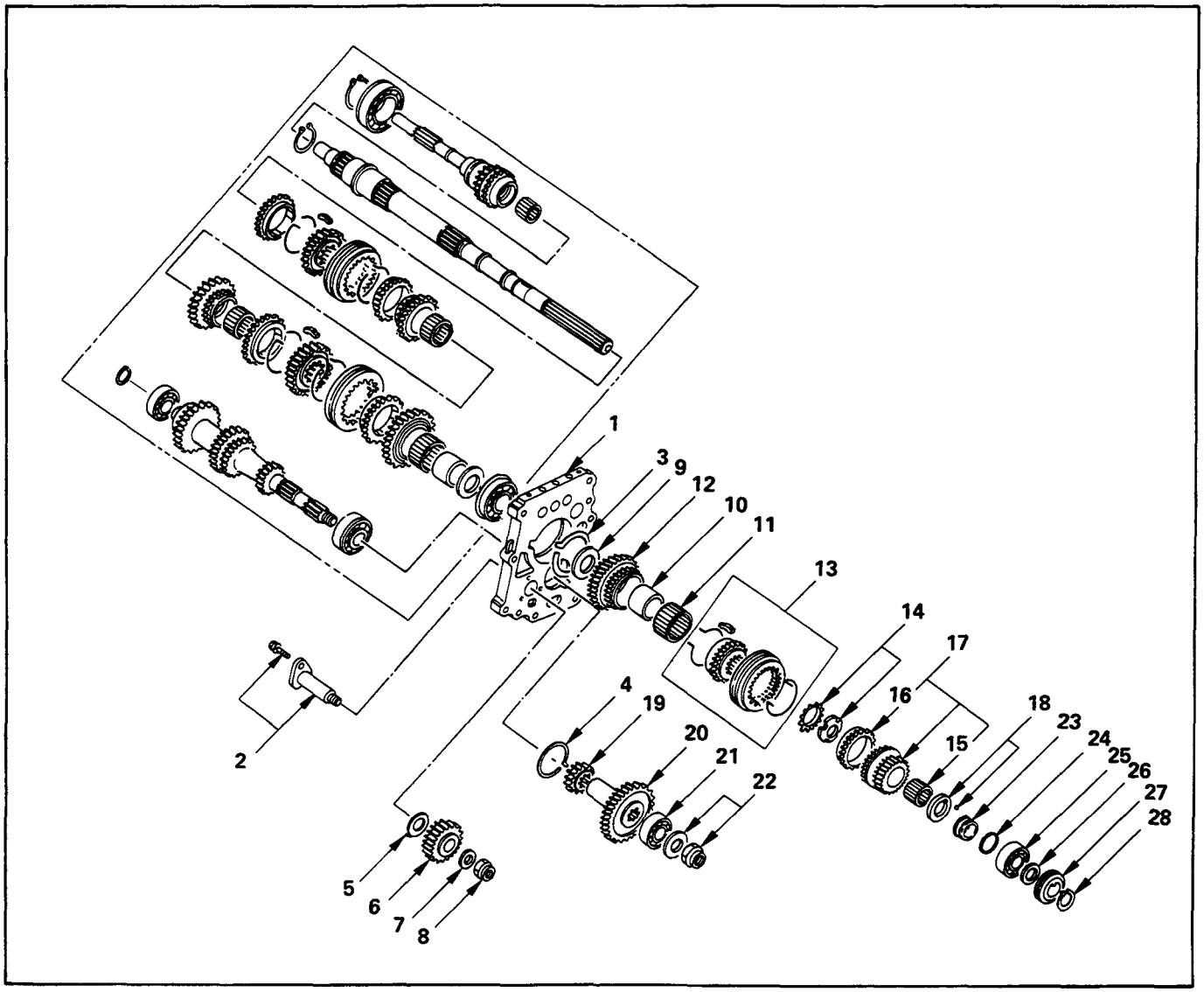

Reassembly Steps

- ▲ 1. Intermediate plate
- ▲ 2. Reverse idler shaft
- 3. Bearing snap ring
- 4. Bearing snap ring
- 5. Thrust washer
- ▲ 6. Reverse idler gear
- 7. Thrust washer
- ▲ 8. Counter reverse gear lock nut
- ▲ 9. Thrust washer
- 10. Needle bearing collar
- 11. Needle bearing
- 12. Reverse gear
- ▲ 13. Rev.—5th synchronizer assembly
- ▲ 14. Mainshaft lock nut and washer
- 15. Needle bearing
- 16. 5th block ring
- 17. 5th gear
- ▲ 18. Thrust washer and lock ball
- 19. Counter reverse gear
- 20. Counter 5th gear
- 21. Counter end ball bearing
- ▲ 22. Counter reverse gear nut and washer
- ▲ 23. Thrust washer thrust ring
- ▲ 24. Thrust ring snap ring
- 25. Mainshaft end ball bearing
- 26. Bearing spacer
- 27. Speedometer drive gear and lock ball
- 28. Bearing snap ring

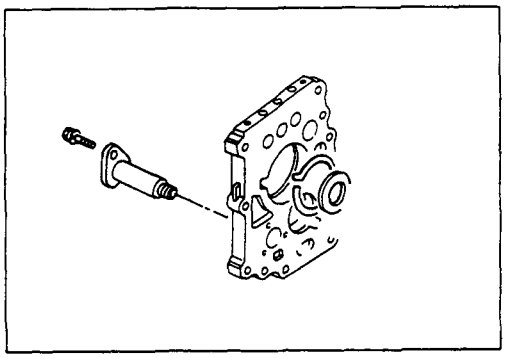

Important Operations

1. Intermediate Plate

2. Reverse Idler Shaft

1) Install the reverse idler shaft to the intermediate plate.
2) Tighten the reverse idler shaft bolt to the specified torque.

Idler Shaft Bolt Torque	kg·m(lb.ft/N·m)
1.9 ± 0.4 (13.7 ± 2.9 / 18.6 ± 3.9)	

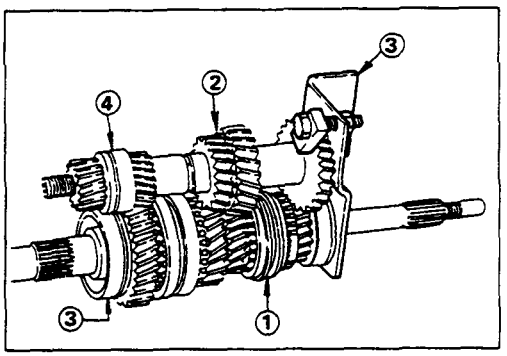

3) Set the mainshaft with gear assembly ① and the counter gear assembly ② to the holding fixture ③.
   Holding Fixture : 5-8840-2001-0 (J-29768)
4) Place the holding fixture (with the mainshaft and the counter shaft) in a vise.
5) Mesh the 3rd—4th synchronizer to the 3rd gear.
   Mesh the 1st—2nd synchronizer to the 1st gear.
6) Install the intermediate plate to the mainshaft and the counter gear ball bearings.

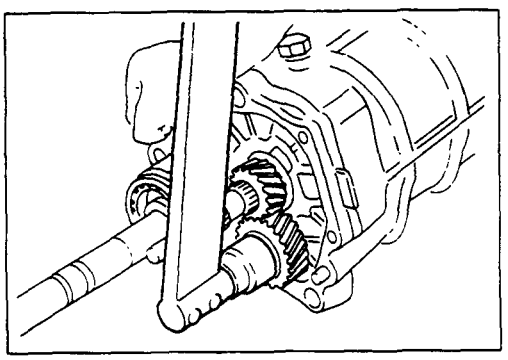

6. Reverse Idler Gear

8. Counter Reverse Gear Lock Nut

1) Apply the engine oil to the idler shaft and the reverse gear inside circumference.
2) Install the reverse gear to the idler shaft.
3) Install a new counter reverse gear lock nut.
   Never reinstall the old lock nut.
4) Tighten the reverse gear lock nut to the specified torque.

Lock Nut Torque	kg·m(lb.ft/N·m)
11 ± 1.0 (79.6 ± 7.2/107.8 ± 9.8)	

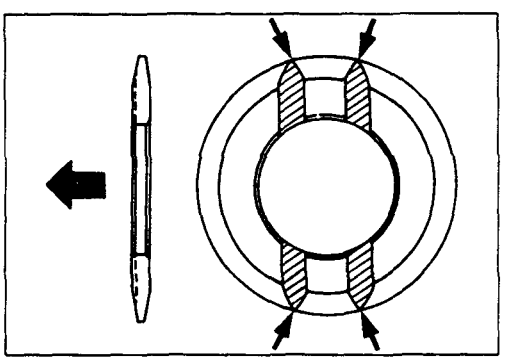

9. Thrust Washer

1) Apply the engine oil to both sides of the thrust washer.
2) Install the thrust washer to the mainshaft.
   The thrust washer oil groove must be facing the reverse gear side.

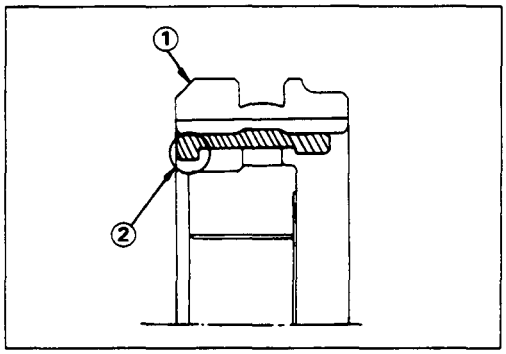

13. Rev.—5th Synchronizer Assembly

1) Apply the engine oil to the clutch hub spline.
2) Install the synchronizer assembly to the mainshaft.
   The sleeve heavy chamfer ① and the insert short side ② must be facing the rear side of the transmission.

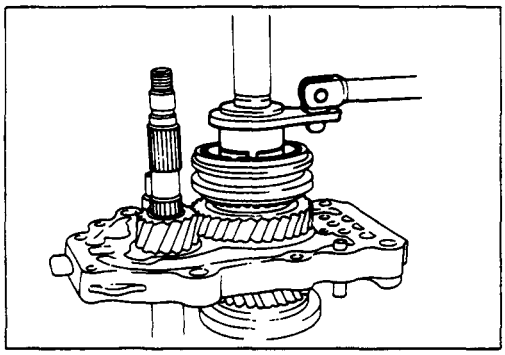

14. Mainshaft Lock Nut and Washer

1) Install a new lock nut and washer to the mainshaft.
   Never reinstall the used lock nut and washer.
2) Use the lock nut wrench to tighten the lock nut to the specified torque.
   Lock Nut Wrench : 5-8840-0353-0 (J-36629)

Lock Nut Torque	kg·m(lb.ft/N·m)
11 ± 1.0 (79.6 ± 7.2 / 107.8 ± 9.8)	

22. Counter Reverse Gear Nut and Washer

Tighten the counter gear lock nut to the specified torque.

Reverse Gear Nut Torque	kg·m(lb.ft/N·m)
11 ± 1.0 (79.6 ± 7.2 / 107.8 ± 9.8)	

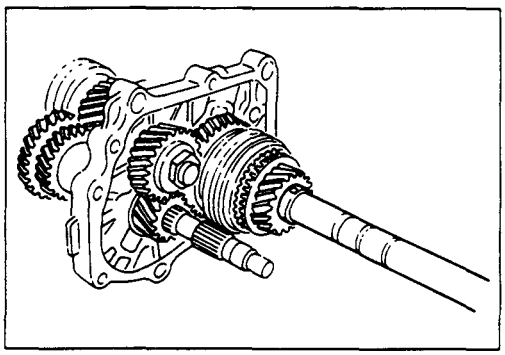

18. Thrust Washer and Lock Ball

23. Thrust Washer Thrust Ring

24. Thrust Ring Snap Ring

1) Install the thrust washer with lock ball together with the thrust ring to the mainshaft.
2) Use a pair of snap ring pliers to install the snap ring.

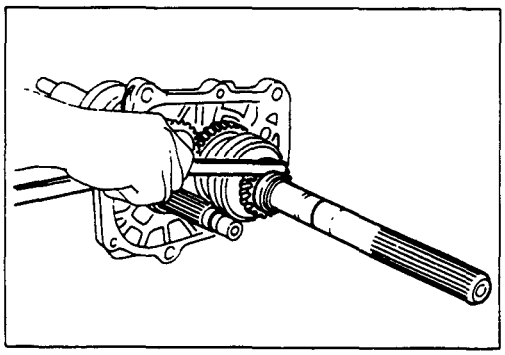

3) Use a thickness gauge to measure the clearance between the 5th gear and the thrust washer.

5th Gear and Thrust Washer Clearance	mm(in)
Standard	
0.1 – 0.3 (0.004 – 0.012)	

If required, replace the existing thrust washer with a new thrust washer to bring the clearance to specification.

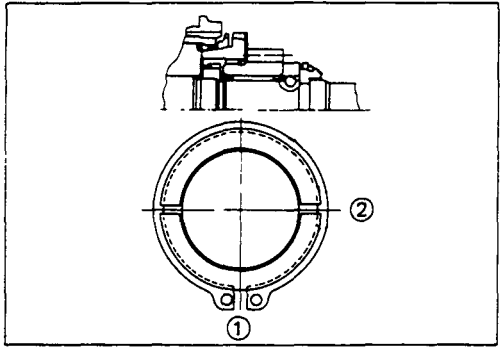

There are six thrust washer sizes available.

Thrust Washer Availability mm(in)

7.8 (0.307)	7.9 (0.311)	8.0 (0.315)
8.1 (0.319)	8.2 (0.323)	8.3 (0.327)

4) Position the thrust ring snap ring gap ① and the thrust ring gap ② so that they are separated at a 90° angle.

DETENT AND SHIFT ARM ASSEMBLY

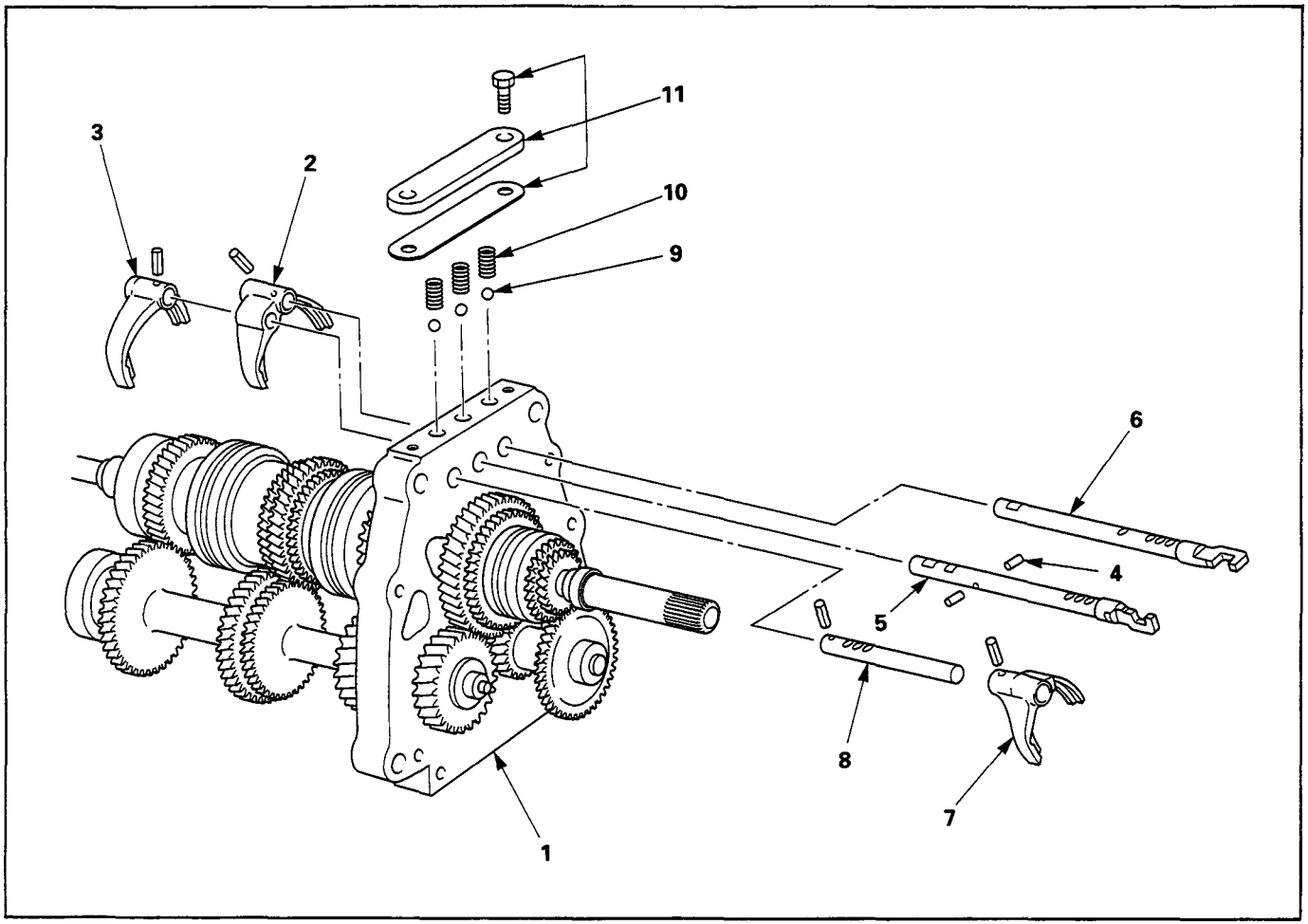

220LV014

Reassembly Steps

1. Intermediate plate and gear assembly
2. ▲ 1st—2nd shift arm
3. ▲ 3rd—4th shift arm
4. Interlock pin
5. 3rd—4th shift rod
6. 1st—2nd shift rod
7. ▲ Rev.—5th shift arm
8. Rev.—5th shift rod
9. Detent ball
10. Detent spring
11. ▲ Detent spring plate and gasket

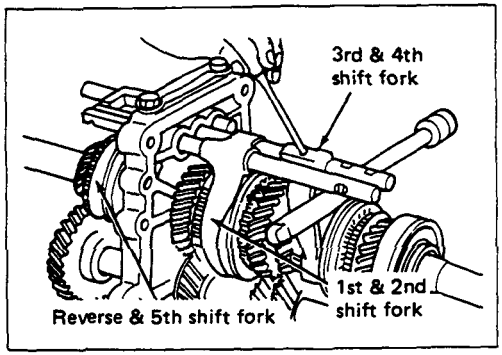

Important Operations

2. 1st—2nd Shift Arm

3. 3rd—4th Shift Arm

7. Rev.—5th Shift Arm

1) Hold a round bar against the shift rod end lower face to protect it against damage.
2) Use a spring pin installer to install the spring pin to the shift arm and the shift rod.

   Never reinstall the used spring pins.

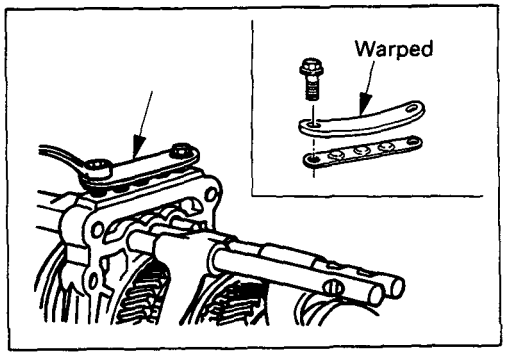

220LV017

11. Detent Spring Plate and Gasket.

1) Install the new detent plete and new gasket onto the transmission case into the correct direction.
2) Tighten the detent spring plate bolts to the specified torque.

Detent Spring Plate Bolt Torque	kg·m(lb.ft/N·m)
1.9 ± 0.4 (13.7 ± 2.9 / 18.6 ± 3.9)	

MAJOR COMPONENTS

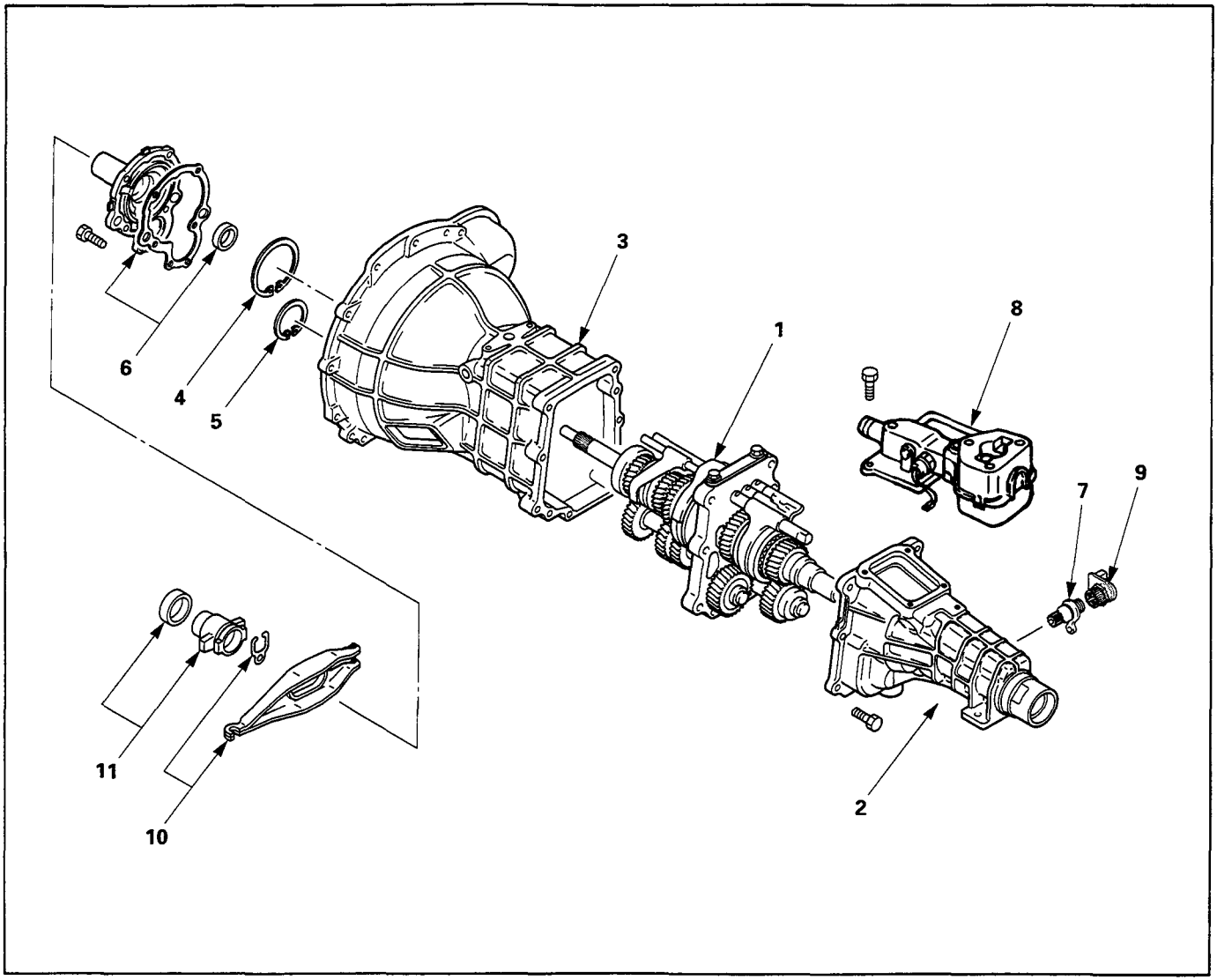

220LV015

Reassembly Steps

1. Intermediate plate with gear assembly
2. ▲ Rear cover with oil seal
3. ▲ Transmission case
4. ▲ Bearing snap ring
5. Counter gear snap ring
6. ▲ Front cover with oil seal
7. Speedometer driven gear
8. Gear control box assembly
9. Speedpmeter sensor
10. Clutch shift fork
11. Clutch shift block and release bearing

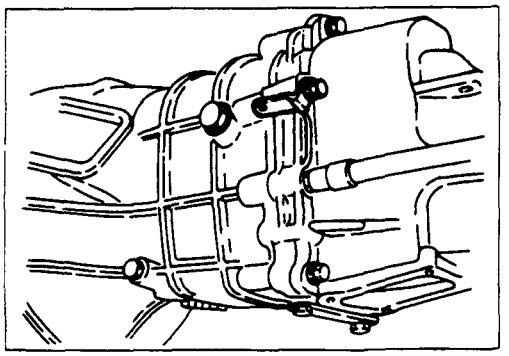

Important Operations

2. Rear Cover with Oil Seal

1) Align the pins at the lower side of the rear cover with the holes in the lower side of the intermediate plate.
2) Apply recommended liquid gasket or its equivalent to the rear cover fitting surfaces.
3) Install the rear cover to the intermediate plate.
4) Tighten the rear cover bolts to the specified torque.

Rear Cover Bolt Torque	kg•m (lb•ft/N•m)
3.8 ± 0.8 (27.5 ± 5.8 / 37.2 ± 7.8)	

Note:

Take care not to twist or puncture the oil seal during the installation procedure.

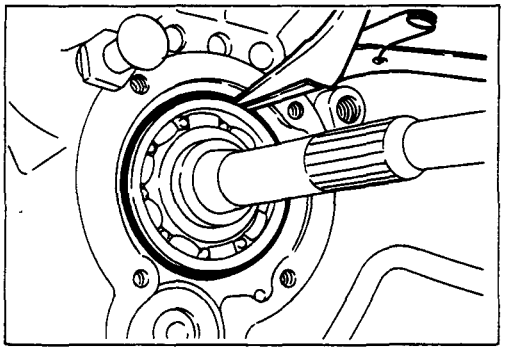

3. Transmission Case

4. Bearing Snap Ring

1) Apply the engine oil to the transmission case top gear shaft ball bearing fitting faces.
2) Apply recommended liquid gasket or its equivalent to the transmission case fitting surfaces.
3) Install the transmission case to the intermediate plate.
4) Pull the top gear shaft from the transmission case until the ball bearing snap ring groove protrudes from the transmission case front cover fitting fece.
5) Use a pair of snap ring pliers to install the snap ring to the ball bearing.

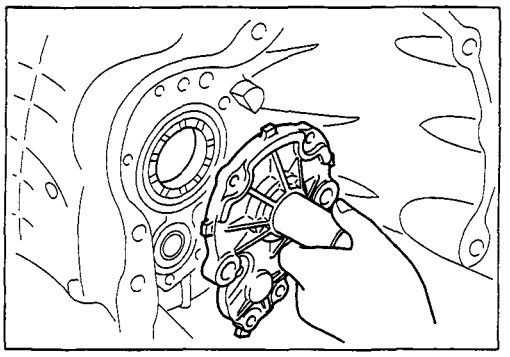

220LV012

6. Front Cover with Oil Seal

1) Clean and apply recommended liquid gasket or its equivalent to the through bolt threads.
2) Install the new gasket and tighten the new cover bolt to the specified torgue.

Front Cover Bolt Torgue	kg•m (lb•ft/N•m)
2.5 ± 0.3 (18.1 ± 2.2 / 24.5 ± 2.9)	

DELTA OPEL ISUZU SUZUKI

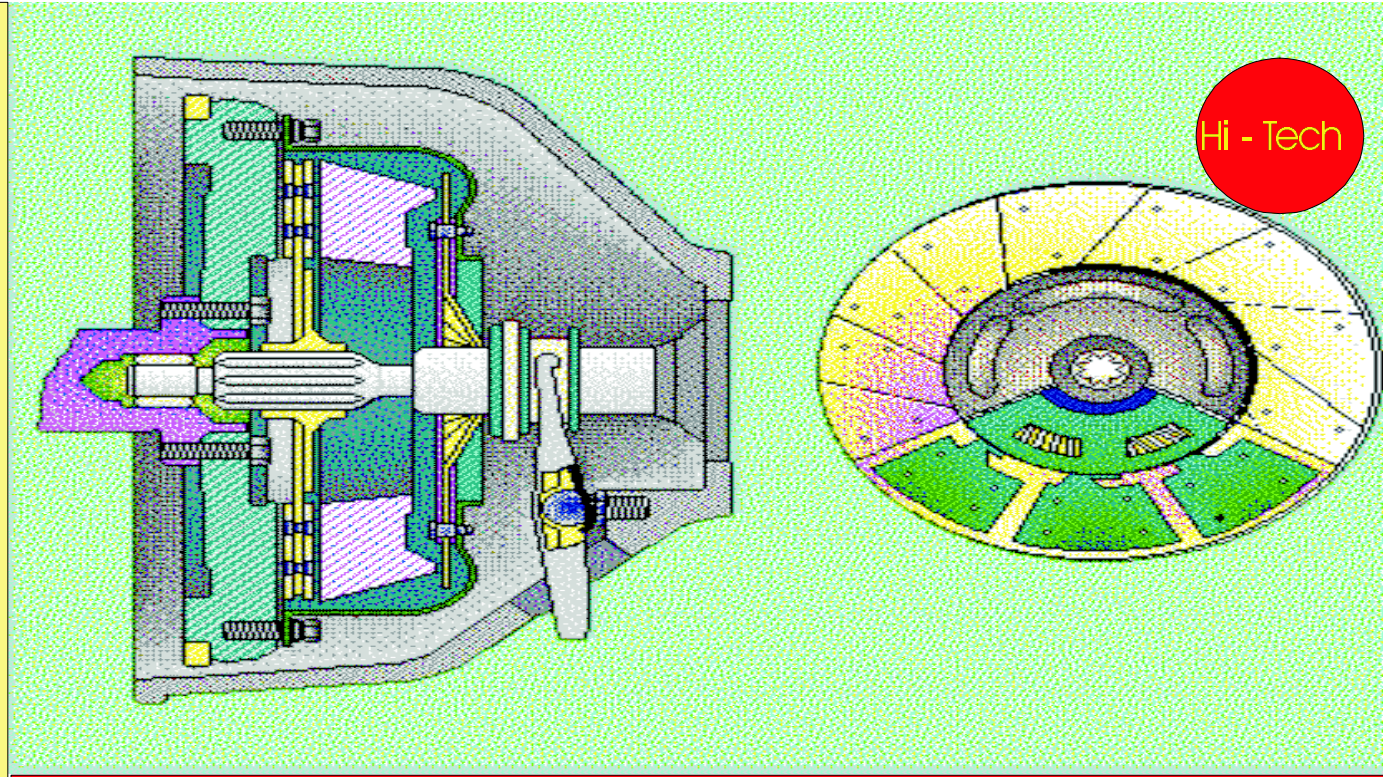

Index

Servicing

Removal

Master Cyl.

Slave Cyl.

Damper

KB TF 140
Clutch

ISUZU

SECTION 7C
CLUTCH

TABLE OF CONTENTS

	PAGE
Main data and specifications	7C– 2
General description	7C– 3
Torque specification	7C– 7
Servicing	7C– 10
Clutch	7C– 12
Removal and installation	7C– 12
Inspection and repair	7C– 15
Clutch control	7C– 21
Removal and installation	7C– 21
Master cylinder	7C– 22
Disassembly	7C– 22
Inspection and repair	7C– 23
Reassembly	7C– 24
Slave cylinder	7C– 25
Disassembly	7C– 25
Inspection and repair	7C– 26
Reassembly	7C– 27
Hydraulic damper cylinder	7C– 28
Inspection and repair	7C– 28
Troubleshooting	7C– 29

MAIN DATA AND SPECIFICATIONS

ENGINE		4ZC1	4JA1	4ZE1	4JB1T
Type		Dry single plate with diaphragm			
Size	mm (in)	215 (8.465)	225 (8.858)		240 (9.449)
Clamping force	kg (lb)	486 (1072)	500 (1103)		560 (1235)
	(N)	(4766)	(4903)		(5492)
Pressure plate					
Outside diameter	mm (in)	215 (8.465)	225 (8.858)		240 (9.449)
Inside diameter	mm (in)	154 (6.063)	154 (6.063)		160 (6.299)
Driven plate					
Thickness	mm (in)				
at free		8.0 (0.315)		8.2 (0.323)	8.0 (0.315)
at compressed		7.8 (0.307)		8.0 (0.315)	7.8 (0.307)
CLUTCH CONTROL		**RHD**			
Type		Hydraulic			
Pedal free play	mm (in)	5.0—15.0 (0.2—0.6)			
Pedal height	mm (in)	216—226 (8.50—8.90)			
Master cylinder					
Bore x Stroke	mm (in)	15.87 x 35 (0.625 x 1.38)			
Slave cylinder					
Bore x Stroke	mm (in)				
4ZC1/4ZC1/4JA1		20.64 x 16 (0.813 x 0.63)			
4ZE1/4JB1T		22.22 x 15 (0.875 x 0.59)			

GENERAL DESCRIPTION

HYDRAULIC CONTROL TYPE

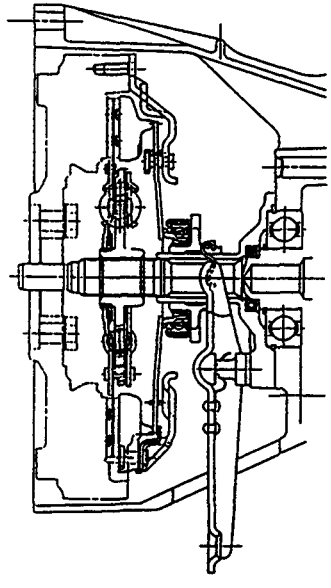

The clutch assembly consists of the pressure plate, the clutch cover, the diaphragm spring pivot pin, and the driven plate assembly.
The clutch pedal is connected to the shift block through the clutch shaft and the shift fork.
The driven plate assembly is installed between the flywheel and the pressure plate. Diaphragm spring pressure holds the driven plate against flywheel and the pressure plate to provide the friction necessary to engage the clutch.
Depressing the clutch pedal moves the shift fork against the shift block. The shift block forces the release bearing against the diaphragm to overcome the force of the diaphragm spring and separate the driven plate from the flywheel and pressure plate to disengage the clutch.

MASTER CYLINDER

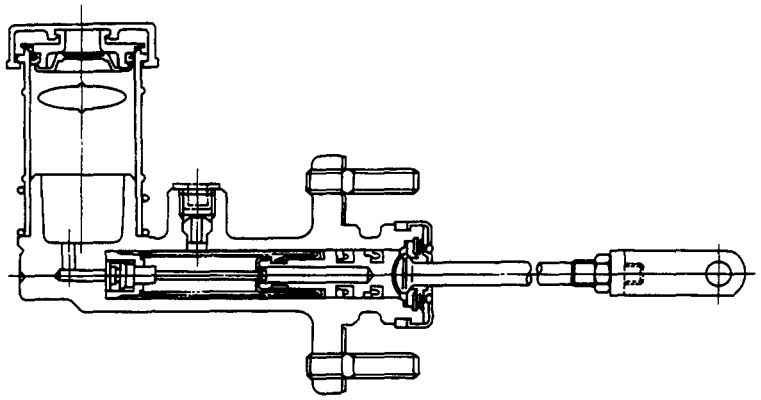

The master cylinder converts mechanical energy into hydraulic energy.

Depressing the clutch pedal causes the push rod to move against the piston to close the return port. Clutch fluid is forced out of the master cylinder.

Releasing the clutch pedal causes the return spring to force the piston back to its original position. The return port is opened and the clutch fluid flows back into the fluid reservoir.

Quickly releasing the clutch pedal will cause the fluid pressure at the return spring side to be lower than the fluid pressure at the push rod side. This allows the fluid at the push rod side to quickly flow to the return spring side through a port in the piston head. This equalizes the pressure at both sides of the piston.

SLAVE CYLINDER

4Z Engine Series

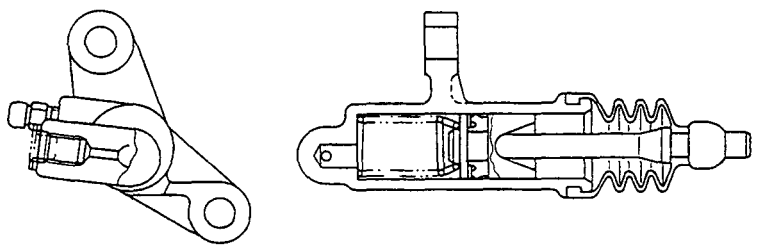

4J Engine Series

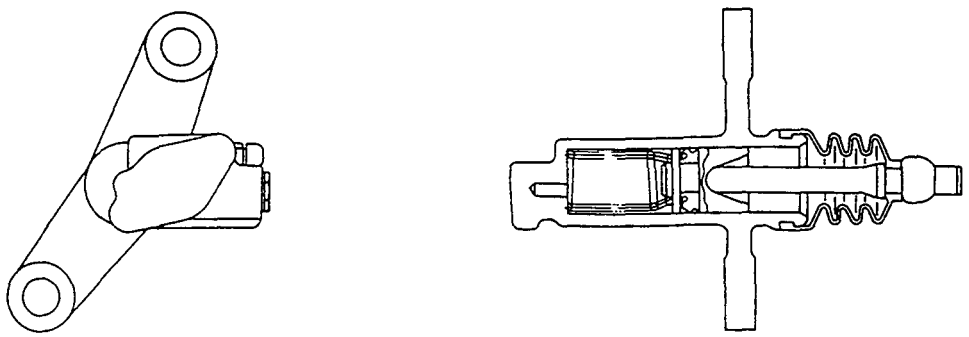

The slave cylinder converts hydraulic energy into mechanical energy. Hydraulic fluid supplied by the master cylinder moves the slave cylinder piston to actuate the shift fork. The mechanical energy produced by the slave cylinder is directly proportional to the diameters of the master cylinder and the slave cylinder.

A bleeder screw is provided to bleed the slave cylinder.

HYDRAULIC DAMPER CYLINDER (FOR 4J Engine Series)

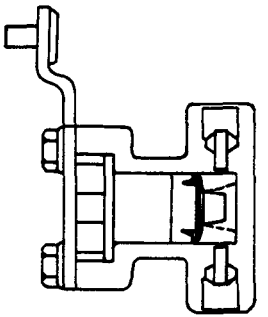

The hydraulic damper cylinder is installed between the master cylinder and the slave cylinder to smooth out variations in clutch pedal feel.

PRESSURE PLATE ASSEMBLY

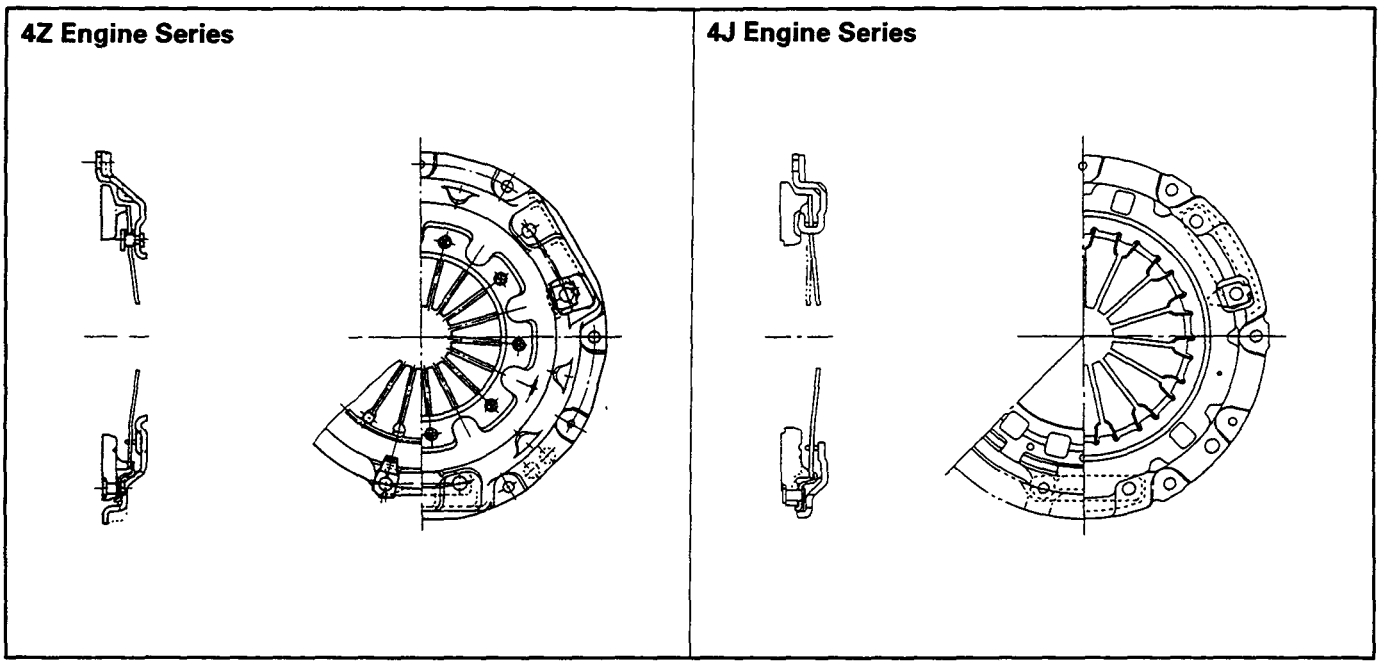

The pressure plate assembly consists of the clutch cover, the pressure plate with diaphragm spring.

Operating the clutch pedal causes the pressure plate to move in an axial direction to engage and disengage the clutch.

DRIVEN PLATE ASSEMBLY

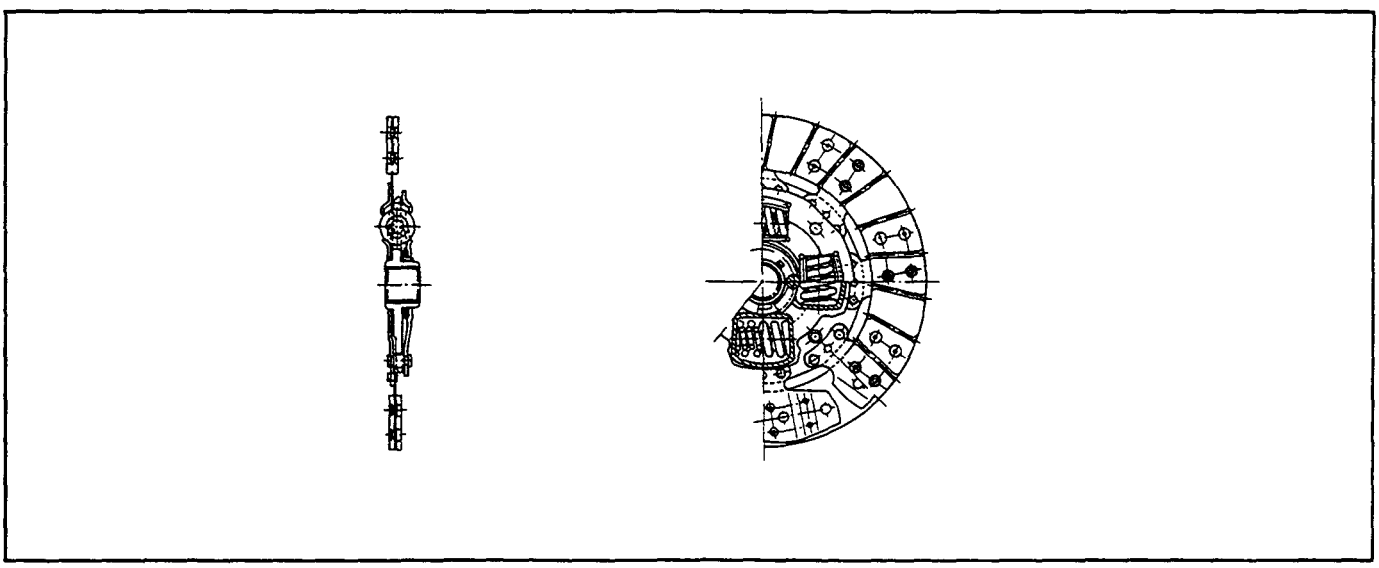

The driven plate assembly consists of the plate and the facing.

The plate consists of the clutch center, the cushioning plate, and the torsion springs.

The facing is riveted to both sides of the cushioning plate.

The cushioning plate provides a longer service life by minimizing wear and vibration at the clutch contact surfaces.

TORQUE SPECIFICATIONS

STANDARD BOLTS

The torque values given in the following table should be applied where a particular torque is not specified.

N·m (kg·m / lb·ft)

	Strength Class	4.8/4T	7T	8.8 Refined	8.8 Non-Refined	9.8/9T
	Bolt Identification	4	7	8	8	9
	Bolt Diameter× Pitch (mm)	No mark	—			
Standard Hex. Head Bolt	M6 × 1.0	6 (0.6 / 52 lb·in)	7 (0.7 / 61 lb·in)	8 (0.8 / 69 lb·in)		–
	M8 × 1.25	13 (1.3 / 113 lb·in)	17 (1.7 / 12)	20 (2.0 / 14)		24 (2.4 / 17)
	M10 × 1.25	27 (2.8 / 20)	37 (3.8 / 27)	42 (4.3 / 31)		50 (5.1 / 37)
	M12 × 1.25	61 (6.3 / 45)	76 (7.8 / 56)	87 (8.9 / 64)		95 (9.7 / 70)
	M14 × 1.5	96 (9.8 / 71)	116 (11.8 / 85)	133 (13.6 / 98)		142 (14.5 / 105)
	M16 × 1.5	130 (13.3 / 96)	170 (17.3 / 125)	193 (19.7 / 143)		200 (20.4 / 148)
	M18 × 1.5	188 (19.2 / 139)	244 (24.9 / 180)	278 (28.3 / 205)		287 (29.3 / 212)
	M20 × 1.5	258 (26.3 / 190)	337 (34.4 / 249)	385 (39.3 / 284)		396 (40.4 / 292)
	M22 × 1.5	332 (33.9 / 245)	453 (46.3 / 335)	517 (52.7 / 381)		530 (54.1 / 391)
	M24 × 2.0	449 (45.8 / 331)	570 (58.2 / 421)	651 (66.3 / 480)		692 (70.6 / 511)
	* M10 × 1.5	26 (2.7 / 20)	36 (3.7 / 27)	41 (4.2 / 30)		48 (4.9 / 35)
	* M12 × 1.75	57 (5.8 / 42)	71 (7.2 / 52)	80 (8.2 / 59)		89 (9.1 / 66)
	* M14 × 2.0	89 (9.1 / 66)	110 (11.2 / 81)	125 (12.7 / 92)		133 (13.6 / 98)
	* M16 × 2.0	124 (12.7 / 92)	162 (16.5 / 119)	185 (18.9 / 137)		191 (19.5 / 141)
Flange Bolt	M6 × 1.0	7 (0.7 / 61 lb·in)	8 (0.8 / 69 lb·in)	9 (0.9 / 78 lb·in)		–
	M8 × 1.25	15 (1.5 / 11)	19 (1.9 / 14)	22 (2.2 / 16)		26 (2.7 / 20)
	M10 × 1.25	31 (3.2 / 23)	41 (4.2 / 30)	47 (4.8 / 35)		56 (5.7 / 41)
	M12 × 1.25	69 (7.0 / 51)	85 (8.7 / 63)	97 (9.9 / 72)		106 (10.8 / 78)
	M14 × 1.5	104 (10.6 / 77)	126 (12.8 / 93)	144 (14.6 / 106)		154 (15.7 / 114)
	M16 × 1.5	145 (14.8 / 127)	188 (19.2 / 139)	214 (21.8 / 158)		221 (22.5 / 163)
	M18 × 1.5	–	–	–		–
	M20 × 1.5	–	–	–		–
	M22 × 1.5	–	–	–		–
	M24 × 2.0	–	–	–		–
	* M10 × 1.5	30 (3.1 / 22)	40 (4.1 / 30)	46 (4.7 / 34)		54 (5.5 / 40)
	* M12 × 1.75	64 (6.5 / 47)	78 (8.0 / 58)	89 (9.1 / 66)		99 (10.1 / 73)
	* M14 × 2.0	97 (9.9 / 72)	119 (12.1 / 88)	135 (13.8 / 99.7)		144 (14.7 / 107)
	* M16 × 2.0	137 (14.0 / 101)	178 (18.2 / 132)	203 (20.7 / 150)		210 (21.5 / 155)

The asterisk * indicates that the bolts are used for female-threaded parts that are made of soft materials such as casting, etc.

FLARE NUTS

N·m (kg·m / lb·ft)

Pipe diameter mm (in)	Torque	Pipe diameter mm (in)	Torque
4.76 (0.187)	16 (1.6 / 12)	10.00 (0.394)	54 (5.5 / 40)
6.35 (0.250)	26 (2.7 / 20)	12.00 (0.472)	88 (9.0 / 65)
8.00 (0.315)	44 (4.5 / 33)	15.00 (0.591)	106 (10.8 / 78)

SPECIAL PARTS FIXING NUTS AND BOLTS

kg·m(lb·ft/N·m)

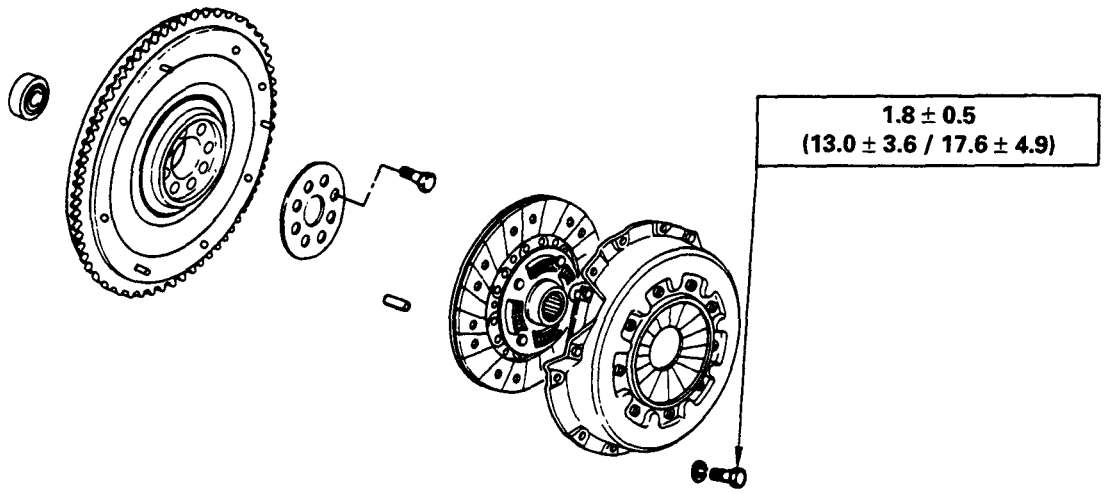

4Z Engine Series

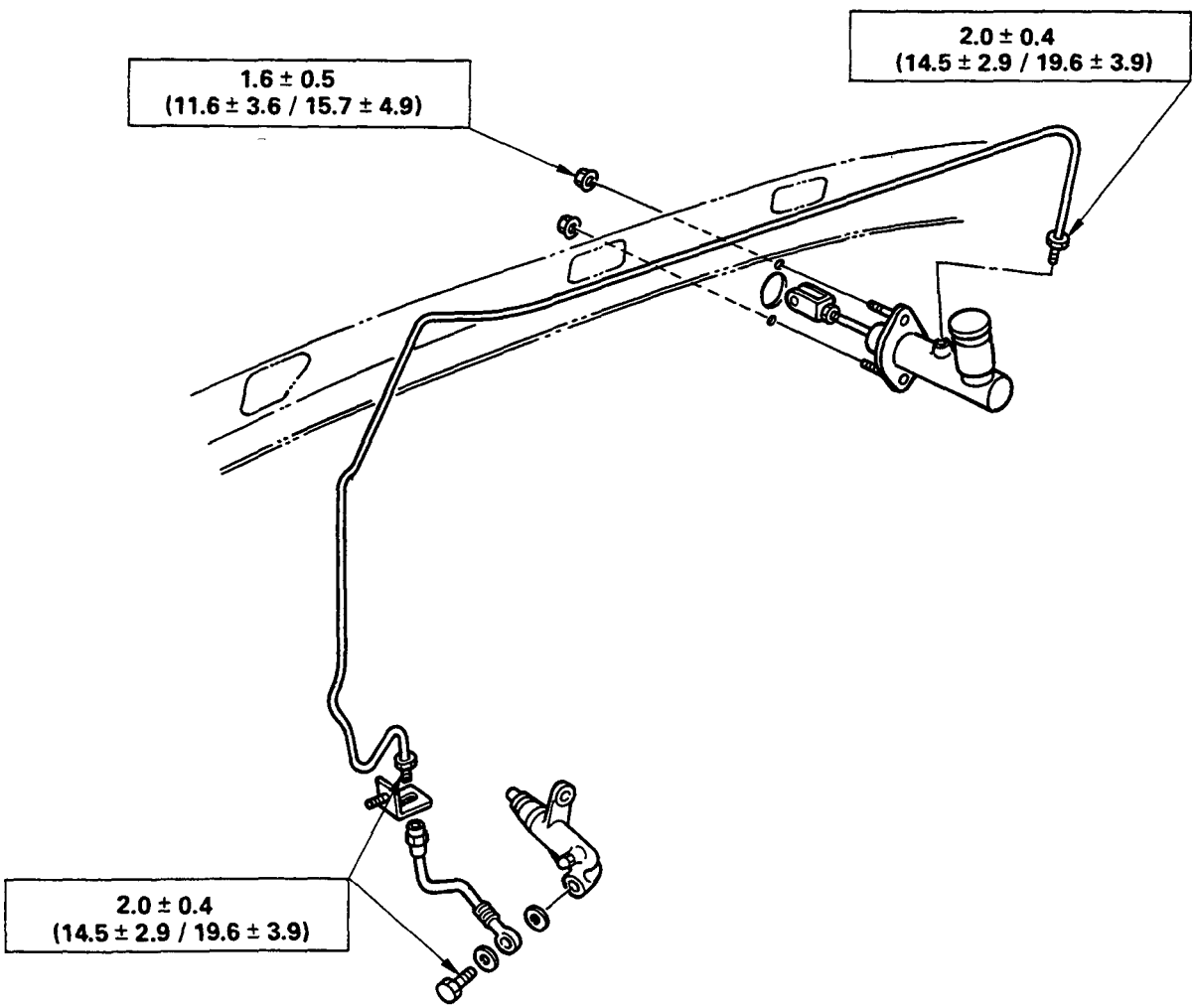

kg•m (lb•ft/N•m)

4J Engine Series

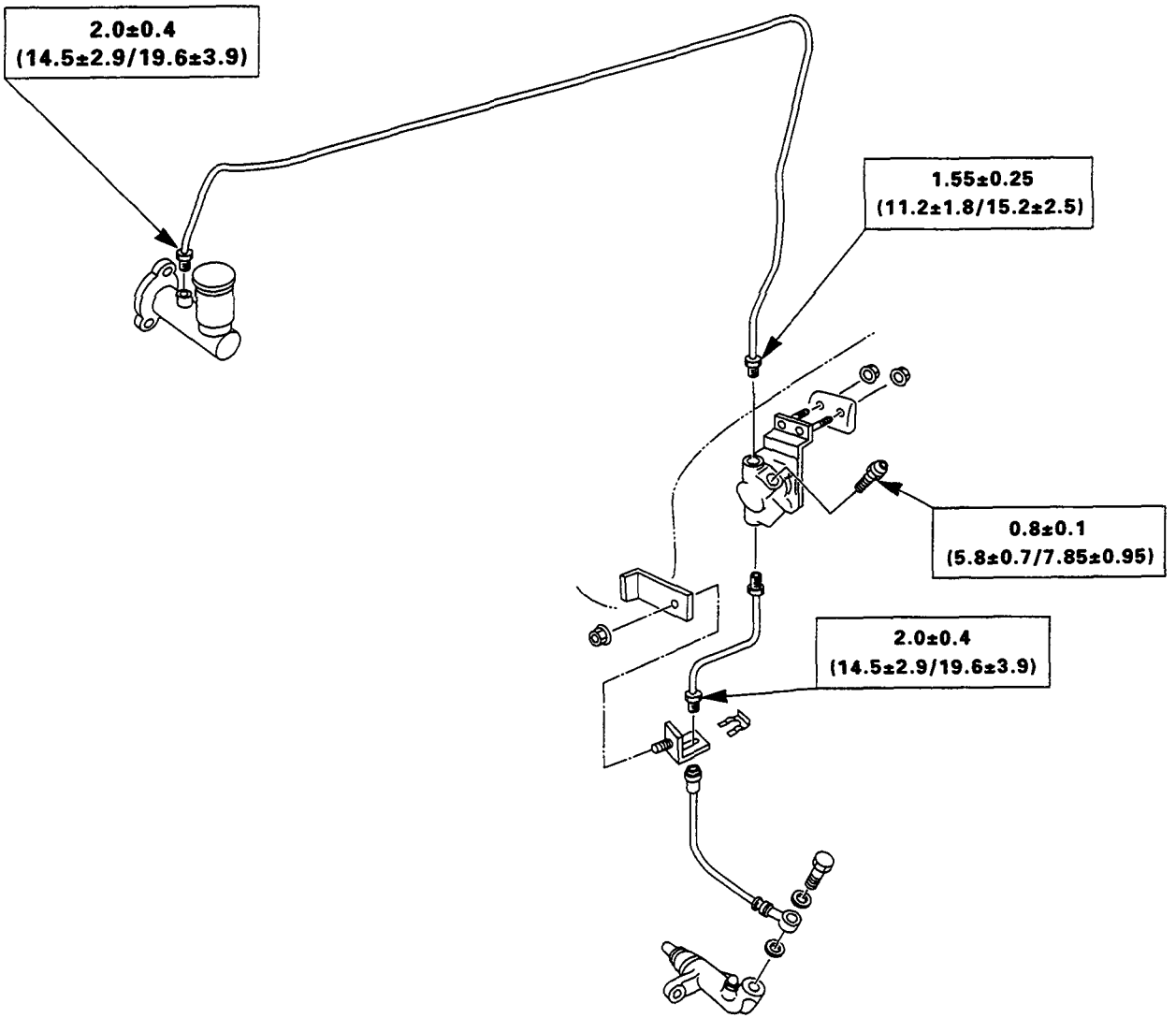

205LV001

SERVICING

Servicing refers to general maintenance procedures to be performed by qualified service personnel.

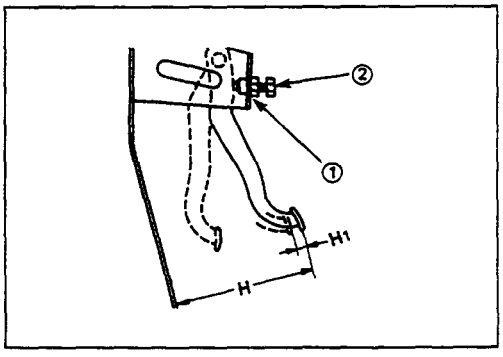

CLUTCH PEDAL HEIGHT

Inspection

Measure to verify that the distance from the upper surface of the pedal pad to the firewall is within the standard value.

Clutch Pedal Height	mm (in)
216—226 (8.50—8.90)	

Adjustment

1. Adjust the clutch pedal height by loosening lock nut (1) and turning stopper bolt or clutch switch (2).
2. After the adjustment, tighten lock nut (1).

CLUTCH PEDAL PLAY

Inspection

Depress the clutch pedal lightly by hand, and measure to determine if the free play is within the standard value.

Clutch Pedal Height	mm (in)
H1	5.0—15.0 (0.2—0.6)

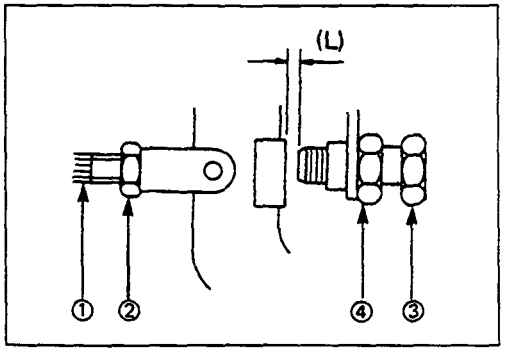

Clutch Pedal Play Adjustment

1. Adjust the free play by loosening lock nut (2) and turning push rod (1).
2. After adjustment, tighten lock nut (2).
3. Drive in (3) so that (L) becomes 0.5 to 1.5 mm (0.02 to 0.06 in), then lock (4).

Bleeding Procedure

1. Bleed air from clutch operating cylinder according to the following procedure.

- Carefully monitor fluid level at master cylinder during bleeding operation.

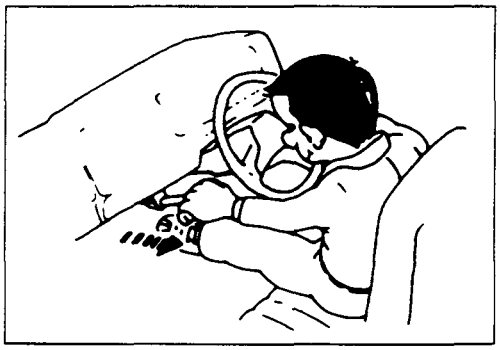

1. Set the paking brake.

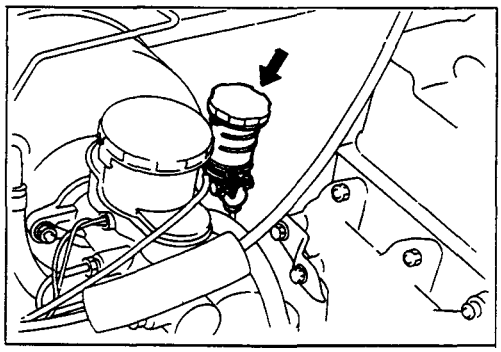

2. Top up reservoir with recommended brake fluid.
3. Connect a transparent vinyl tube to air bleeder valve.

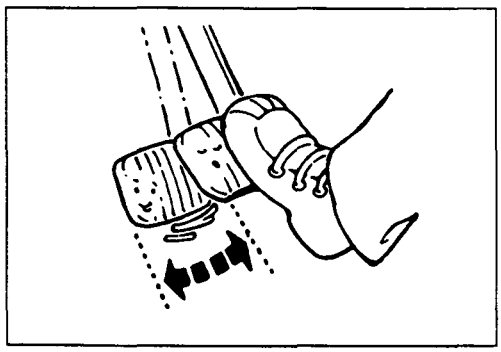

4. Fully depress clutch pedal several times.

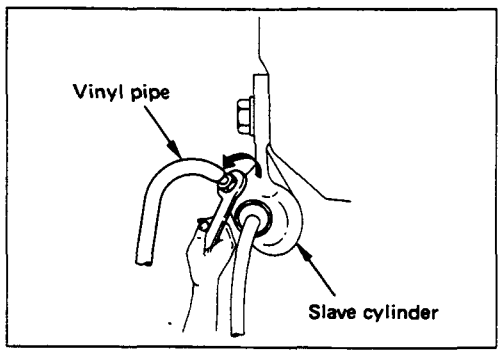

5. With clutch pedal depressed, open bleeder valve to release air.
6. Close bleeder valve.
7. Repeat steps 5 through 6 above until brake fluid flows from air bleeder valve without air bubbles.
8. Bleed air from clutch damper according to the above procedure.
9. Repeat the above bleeding procedure 1 and 2 several times.

CLUTCH

REMOVAL AND INSTALLATION

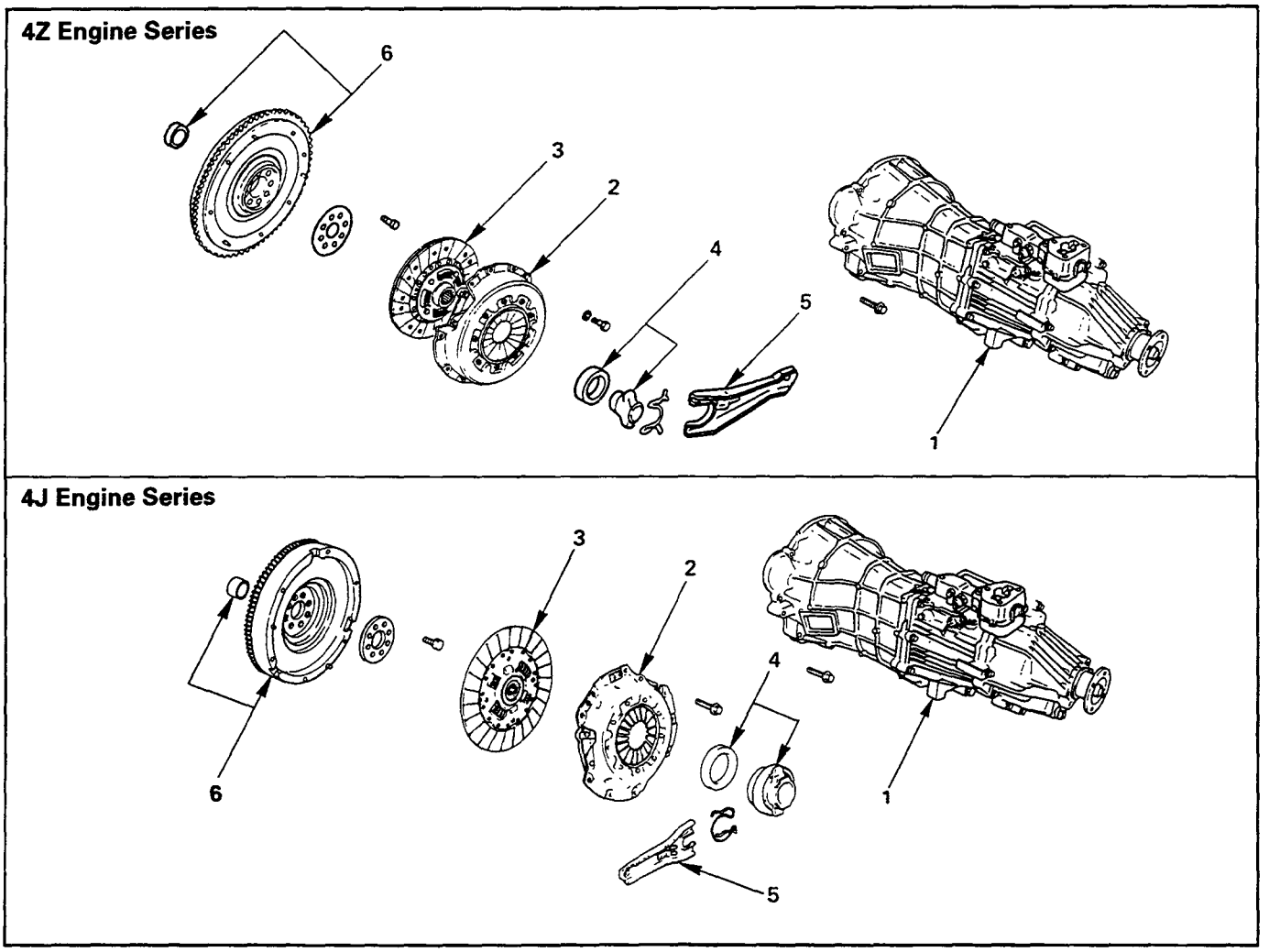

Removal Steps

1. Transmission assembly
▲ 2. Pressure plate assembly
▲ 3. Driven plate assembly
4. Release bearing
5. Shift fork
6. Flywheel assembly and cran bearing

Installation Steps

To install, follow the removal steps in the reverse order.

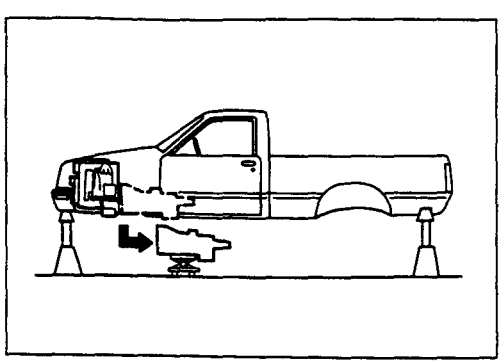

Important Operations — Removal

1. Transmission Assembly

Refer to "MANUAL TRANSMISSION" of section 7B for "REMOVAL AND INSTALLATION" procedure.

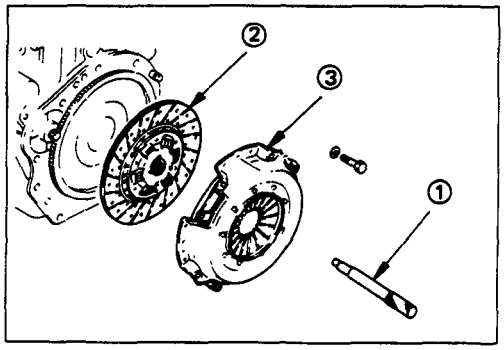

2. Clutch Pressure Plate Assembly

3. Driven Plate Assembly

1. Use the clutch pilot aligner ① to prevent the driven plate assembly ② from falling free.

   Clutch Pilot Aligner : 5-8525-3001-0 (J-24547)

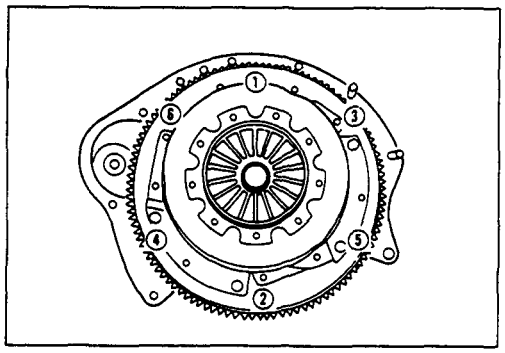

2. Loosen the clutch cover bolts in the numerical order shown in the illustration.
3. Remove the pressure plate assembly ③ from the flywheel.
4. Remove the driven plate from the flywheel.

Important Operations — Installation

Follow the removal procedure in reverse order to perform the installation procedure. Pay careful attention to the important points during the installation procedure.

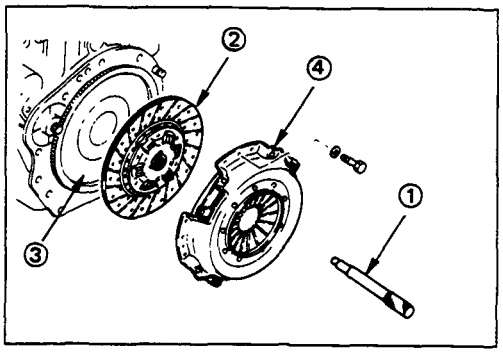

3. Driven Plate Assembly

2. Clutch Pressure Plate Assembly

1. Clean the flywheel surface.
2. Clean the facing surface.
3. Use the clutch pilot aligner ① to install the driven plate assembly ② to the flywheel ③.

   Clutch Pilot Aligner : 5-8525-3001-0 (J-24547)

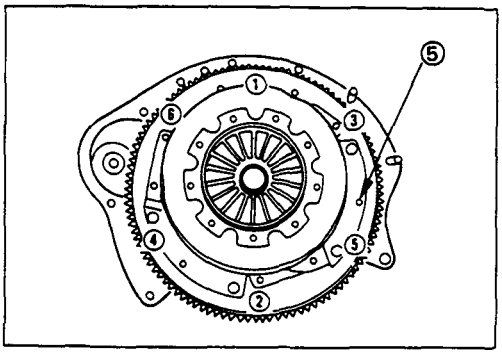

4. Clean the pressure plate surfaces.
5. Align the pressure plate assembly ④ with the flywheel knock pin ⑤.
6. Install the pressure plate assembly to the flywheel.
7. Tighten the clutch cover bolts a little at a time in the numerical order shown in the illustration.

Clutch Cover Bolt Torque	kg·m(lb.ft/N·m)
1.8 ± 0.5 (13.0 ± 3.6/17.6 ± 4.9)	

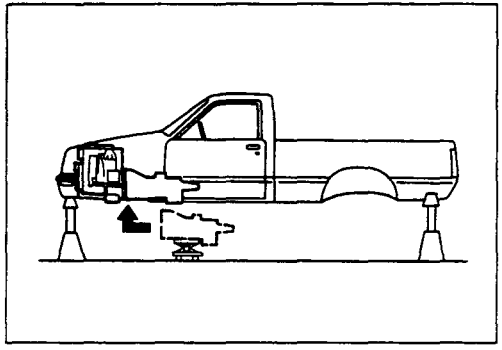

8. Remove the clutch pilot aligner.

Note:

Do not strike the clutch pilot aligner with a hammer to remove it.

INSPECTION AND REPAIR

Make the necessary adjustments, repairs, and part replacements if excessive wear or damage is discovered during inspection.

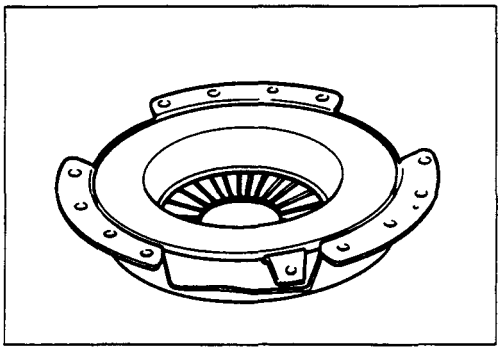

PRESSURE PLATE ASSEMBLY

Visually inspect the pressure plate friction surface for excessive wear and heat cracks.

If excessive wear or deep heat cracks are present, the pressure plate must be replaced.

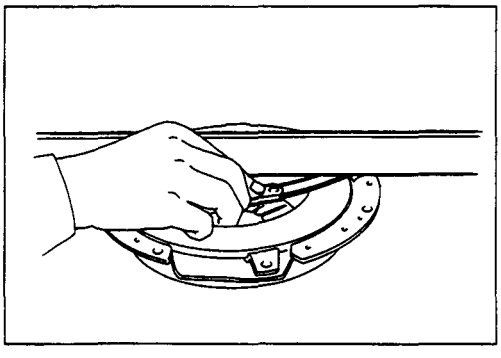

Pressure Plate Warpage

Use a straight edge and a feeler gauge to measure the pressure plate friction surface flatness in four directions.

If any of the measured values exceed the specified limit, the pressure plate must be replaced.

Pressure Plate Warpage	mm(in)
Limit	
0.3 (0.012)	

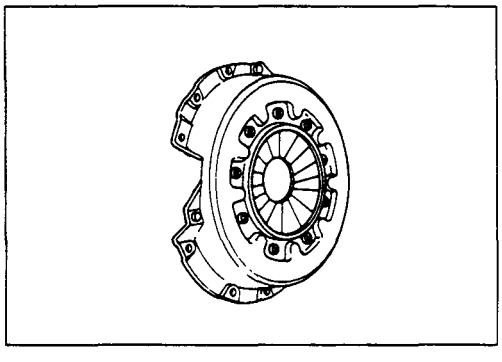

Clutch Cover

Visually inspect the entire clutch cover for excessive wear, cracking, and other damage.

The clutch cover must be replaced if any of these conditions are present.

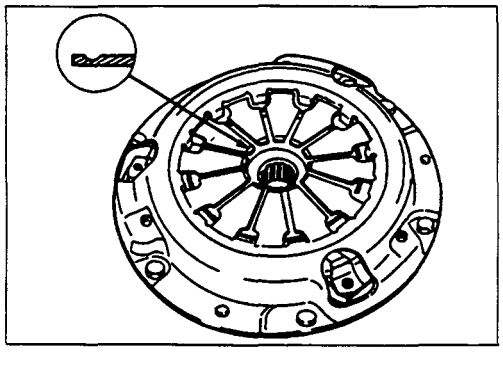

1. Abrasion, scratches, cracks and deflection of friction face to the disc, loose rivet and wear of wire ring
   - Grind small scratches, or replace the assembly if extreme scratches are found.

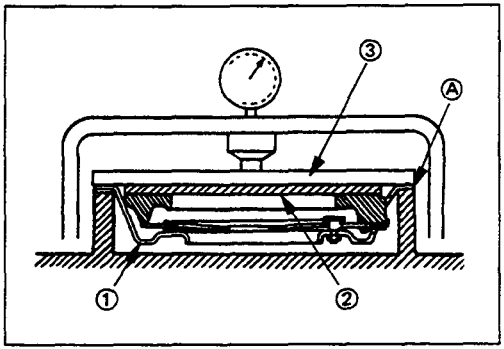

Clutch Set Force

1. Position the pressure plate assembly (1) as shown in the illustration.
2. Place the new driven plate (2) over the pressure plate assembly.

Driven Plate Thickness (Reference) mm (in)

	Standard	
	Free	Compressed
4ZC1	8.0 (0.315)	7.8 (0.307)
4ZE1	8.2 (0.323)	8.0 (0.315)
4JA1	8.0 (0.315)	7.8 (0.307)
4JB1T	8.0 (0.315)	7.8 (0.307)

3. Place a metal sheet (3) between the press and the driving plate.
4. Compress the metal sheet and the driven plate until the driven plate is flush with the drive plate assembly (A).
5. Note the pressure gauge reading.

Driven Plate Slamping Force kg (Lb/N)

	Standard
4ZC1	486 (1,072/4,766)
4JA1	500 (1,103/4,903)
4ZE1	560 (1,235/5,492)
4JB1T	560 (1,235/5,492)

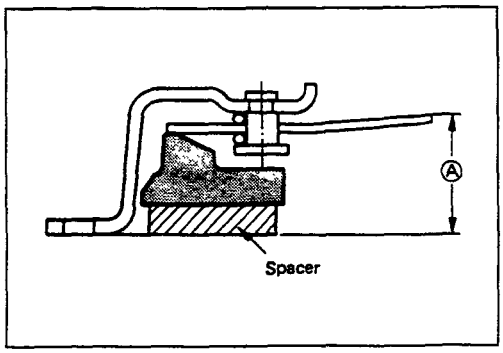

Diaphragm Spring Finger Height

1. Place the appropriate spacer beneath the pressure plate.
   Refer to the table below

Spacer Thickness (Reference)	mm (in)
4ZE1	8.0 (0.315)
OTHER	7.8 (0.307)

2. Fully compress the pressure plate and the diaphragm spring.
   There are two ways to do this.
   1) Use a bench press to press down the assembly from the top.
   2) Tighten the fixing bolts.
3. Measure the spring finger height (A) from the base to the spring tip.

Spring Finger Height	mm (in)
4ZC1	31.7 — 33.7 (1.25 — 1.33)
4JA1	30.5 — 32.5 (1.20 — 1.28)
4ZE1	37.5 — 39.5 (1.48 — 1.56)
4JB1T	35.0 — 37.0 (1.38 — 1.46)

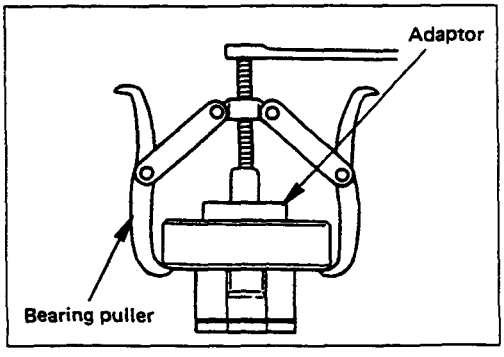

Release Bearing Replacement

Removal

Use the bearing puller and the adapter to remove the release bearing.
Bearing Puller : 5-8840-0013-0 (J-22888)
Adapter : 5-8840-0124-0 (J-2241-11)

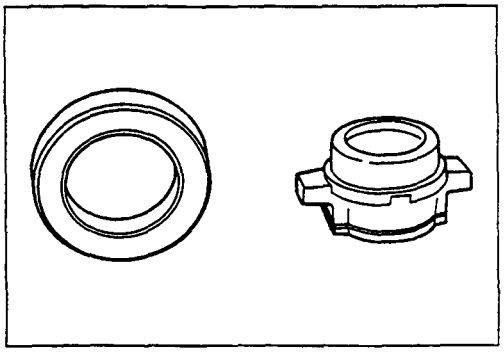

Release Bearing Installation

1. Set the release bearing to the shift block bearing fitting surfaces.
2. Use a bench press to fit the release bearing to the shift block.

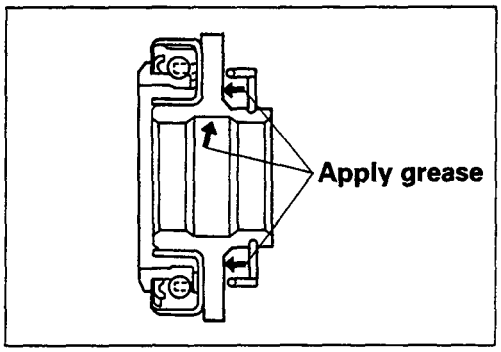

Install the parts as illustrated after applying wheel bearing grease or multi-purpose type grease (NLGI No. 2 or No. 3).

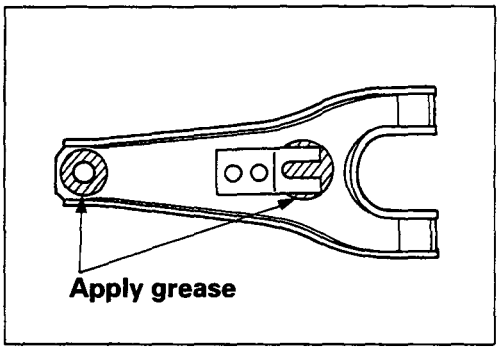

Shift Fork

1. Visually inspect the surfaces of the shift fork making contact with the shift block for excessive wear and damage.
2. Remove any minor stepping or abrasion from the shift block with an oil stone.

   Replace any exhibiting excessive wear or damage.
3. Apply multi-purpose type grease (NLGI No.2 or No.3) to ▨ area.

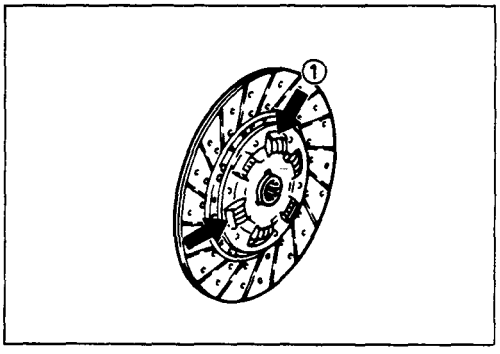

DRIVEN PLATE ASSEMBLY

1. Visually inspect the torsion spring ① for looseness, breakage, and weakening.

   If any of these conditions are discovered, the driven plate assembly must be replaced.

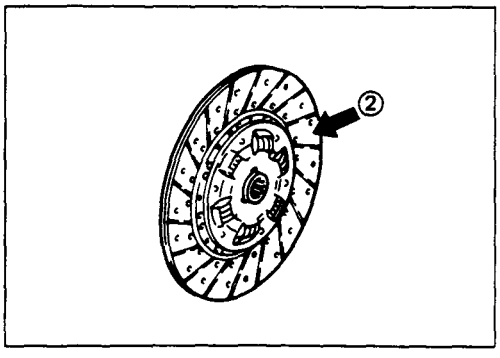

2. Visually inspect the facing surfaces ② for cracking and excessive scorching.

   Visually inspect the facing surfaces for the presence of oil or grease.

   If any of these conditions are discovered, the facing must be cleaned or replaced.

3. Check that the driven plate moves smoothly on the transmission top gear shaft spline.

   Minor ridges on the top gear shaft spline may be removed with an oil stone.

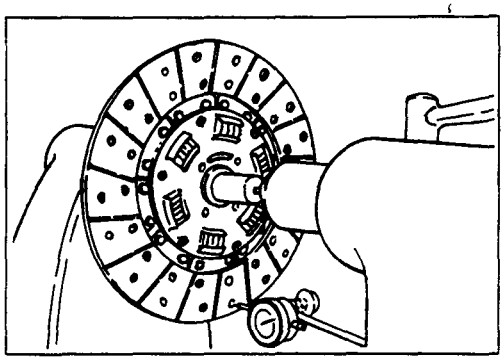

Driven Plate Warpage

1. Insert the clutch pilot aligner into the driven plate splined hub.

   The clutch pilot aligner must be held perfectly horizontal.

   Clutch Pilot Aligner : 5-8825-3001-0 (J-24547)
2. Set a dial indicator to the driven plate outside circumference.
3. Slowly turn the driven plate.

   Read the dial indicator as you turn the driven plate.

   If the measured value exceeds the specified limit, the driven plate assembly and/or the facing must be replaced.

Driven Plate Warpage mm(in)

Standard	Limit
0.7 (0.028)	1.0 (0.039)

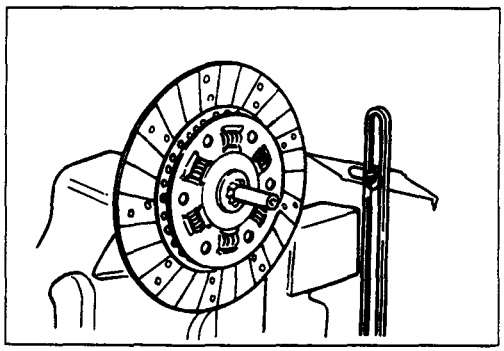

Driven Plate Splined Hub Spline Wear

1. Clean the driven plate splined hub.
2. Install the driven plate to the transmission top gear shaft spline.
3. Set a surface gauge to the driven plate outside circumference.
4. Slowly turn the driven plate counterclockwise.

   Measure the spline rotation play as you turn the driven plate.

   If the measured value exceeds the specified limit, the driven plate assembly must be replaced.

Driven Plate Splined Hub Spline Wear mm(in)

Standard	Limit
0.5 (0.020)	1.0 (0.039)

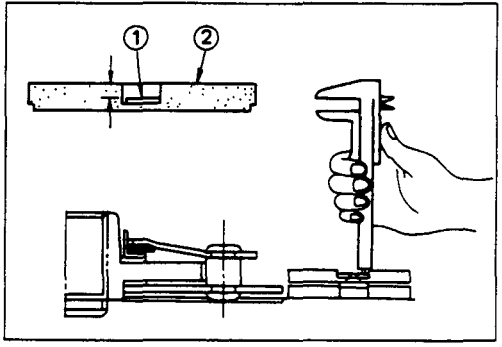

Rivet Head Depression

Use a depth gauge or a straight edge with steel rule to measure the rivet head depression ① from the facing surface ②.

Be sure to measure the rivet head depression on both sides of the driven plate.

If the measured value is less than the specified limit, the facing must be replaced.

Rivet Head Depression mm(in)

	Standard		Limit
	Fly wheel side	P/Plate side	
4JA1	1.35—1.95 (0.053—0.077)	1.65—2.25 (0.065—0.089)	0.2 (0.008)
OTHER	1.3—1.9 (0.051—0.075)		

CLUTCH CONTROL

REMOVAL AND INSTALLATION

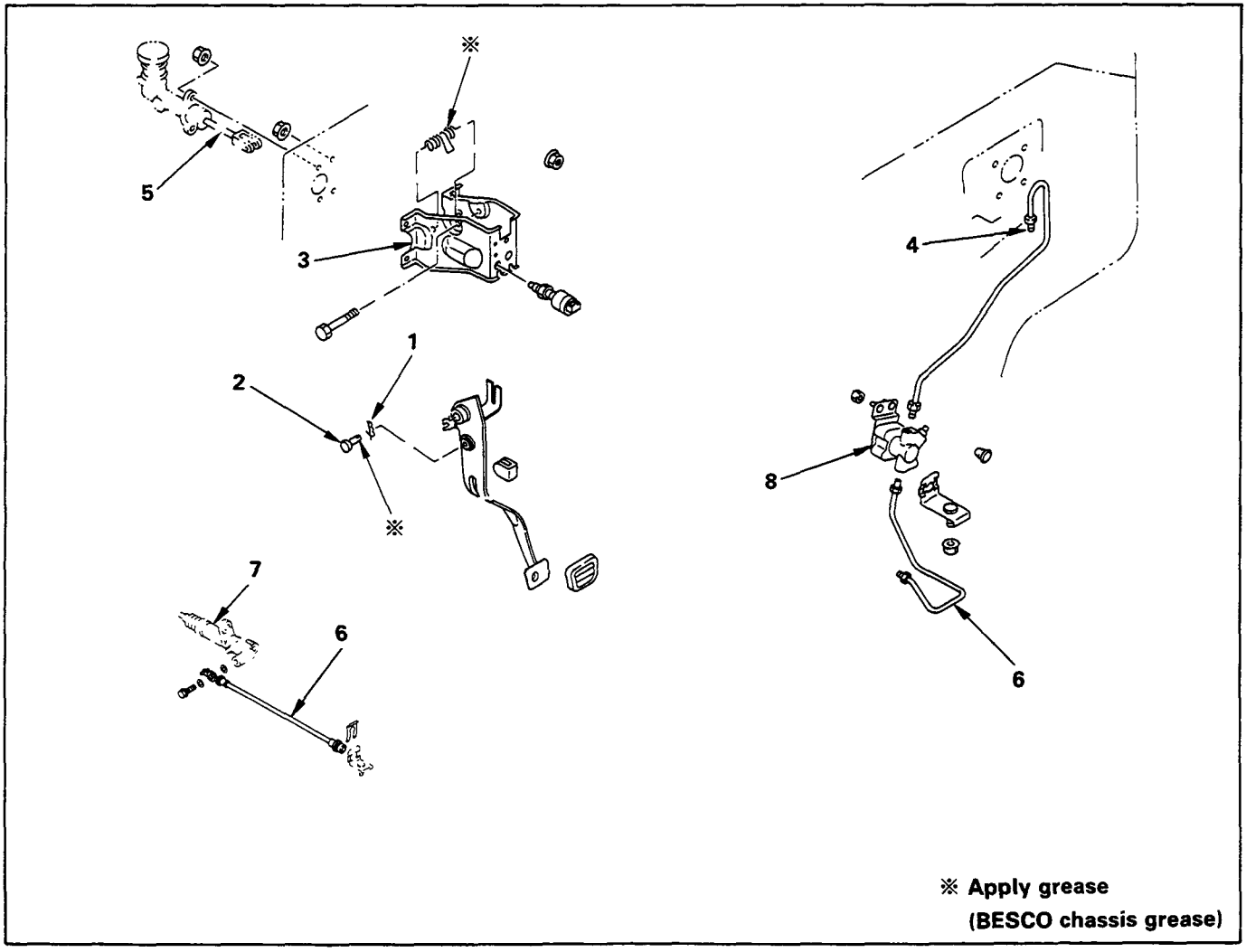

Removal Steps

1. Pin
2. Jaw joint pin
3. Pedal assembly
4. Oil line
5. Master cylinder assembly
6. Oil line
7. Slave cylinder assembly
8. Damper cylinder assembly (For 4J engine series)

Installation Steps

8. Damper cylinder assembly (For 4J engine series)
7. Slave cylinder assembly
6. Oil line
5. Master cylinder assembly
4. Oil line
3. Pedal assembly
2. Jaw joint pin
1. Pin

MASTER CYLINDER

DISASSEMBLY

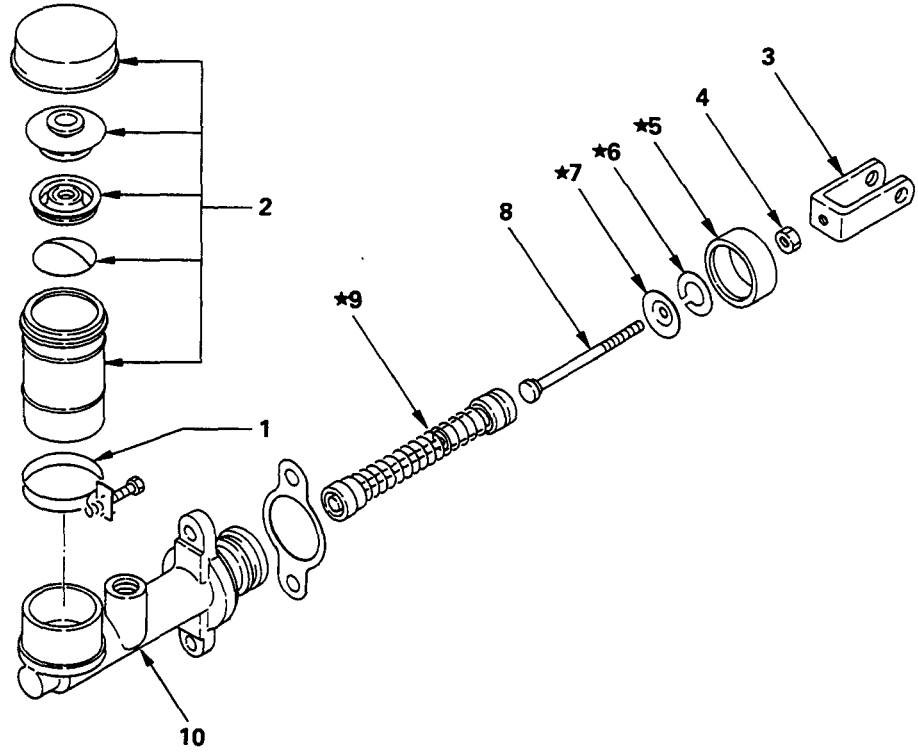

★ Repair kit

Disassembly Steps

1. Oil tank band
2. Oil tank assembly
3. Joint
4. Lock nut
5. Dust cover
6. Stopper ring
7. Stopper
8. Push rod
9. Piston assembly
10. Cylinder body

INSPECTION AND REPAIR

Make the necessary adjustments, repairs, and part replacements if excessive wear or damage is discovered during inspection.

Cylinder Body

1. Clean the cylinder body.
2. Check the fluid return port for restrictions and clean it if necessary.

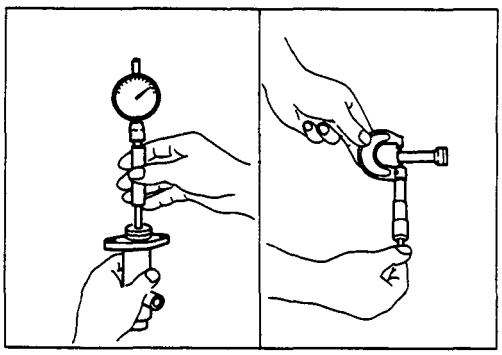

Cylinder Bore and Piston Clearance

1. Clean the cylinder body and the piston.
2. Use an inside dial indicator to measure the cylinder bore.
3. Use a micrometer to measure the piston diameter.
4. Calculate the clearance between the cylinder bore and the piston.

   If the clearance exceeds the limit, the entire master cylinder assembly must be replaced.

Cylinder Bore and Piston Clearance mm(in)

Standard	Limit
0.07 (0.0028)	0.15 (0.006)

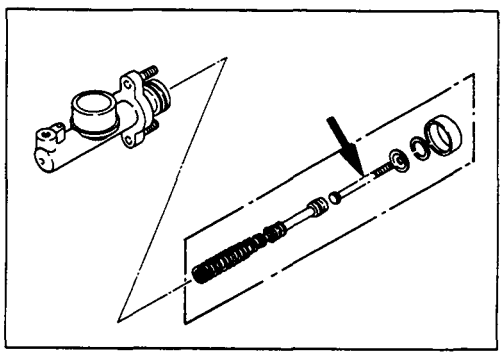

Inner Parts

Replace the inner parts with new parts shown in the illustration.

REASSEMBLY

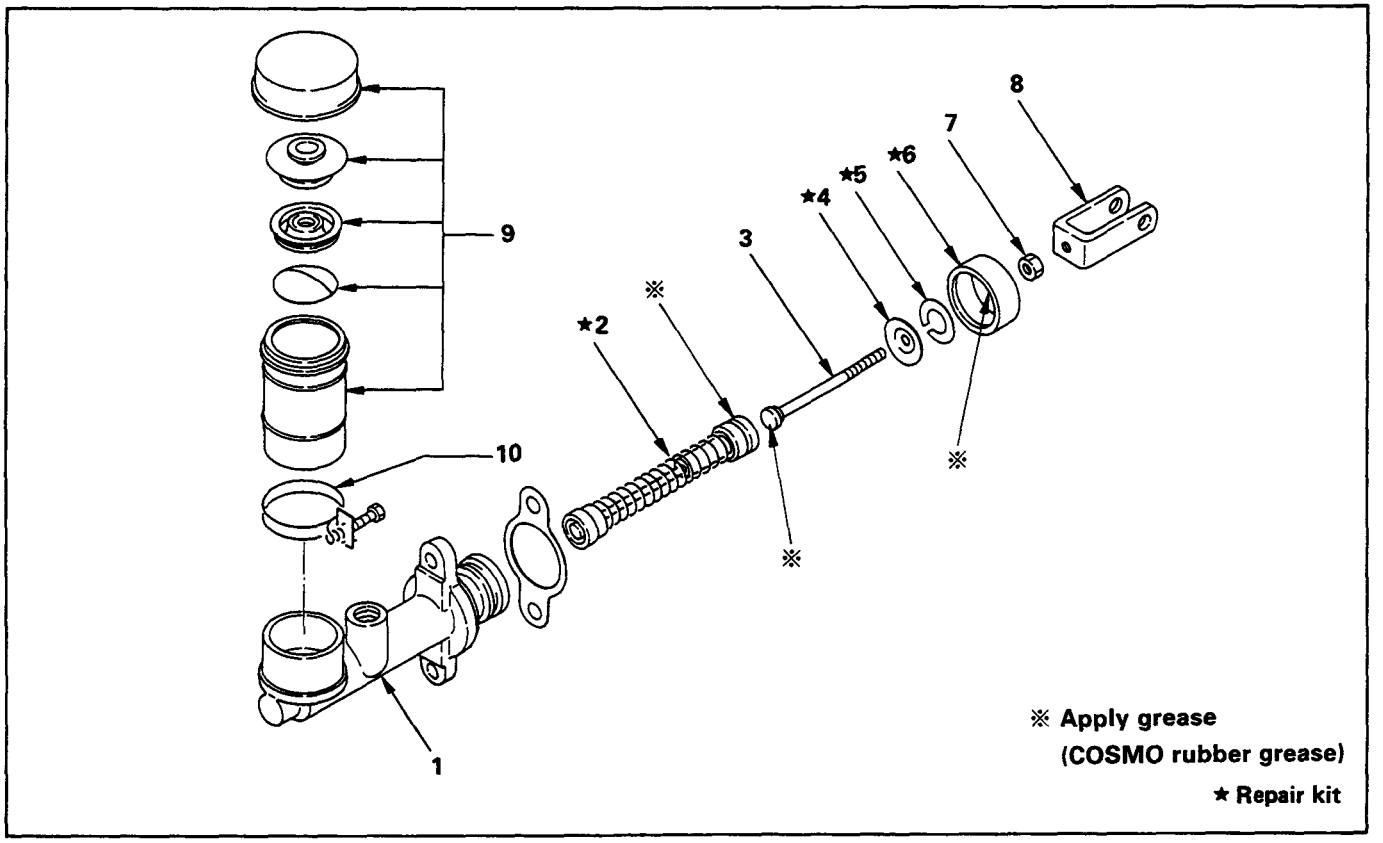

Reassembly Steps

▲ 1. Cylinder body
2. Piston assembly
3. Push rod
4 Stopper
5. Stopper ring
6. Dust cover
7. Lock nut
8. Joint
9. Oil tank assembly
10. Oil tank band

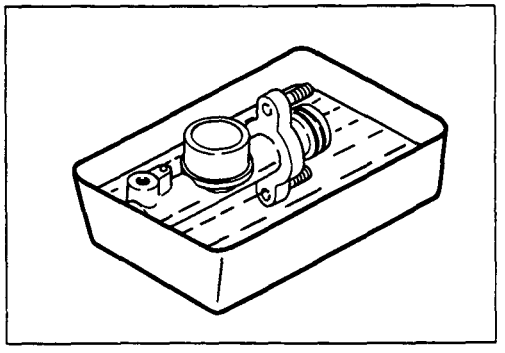

Important Operations

1. Cylinder Body

Immerse the cylinder body in clean brake fluid.

SLAVE CYLINDER

DISASSEMBLY

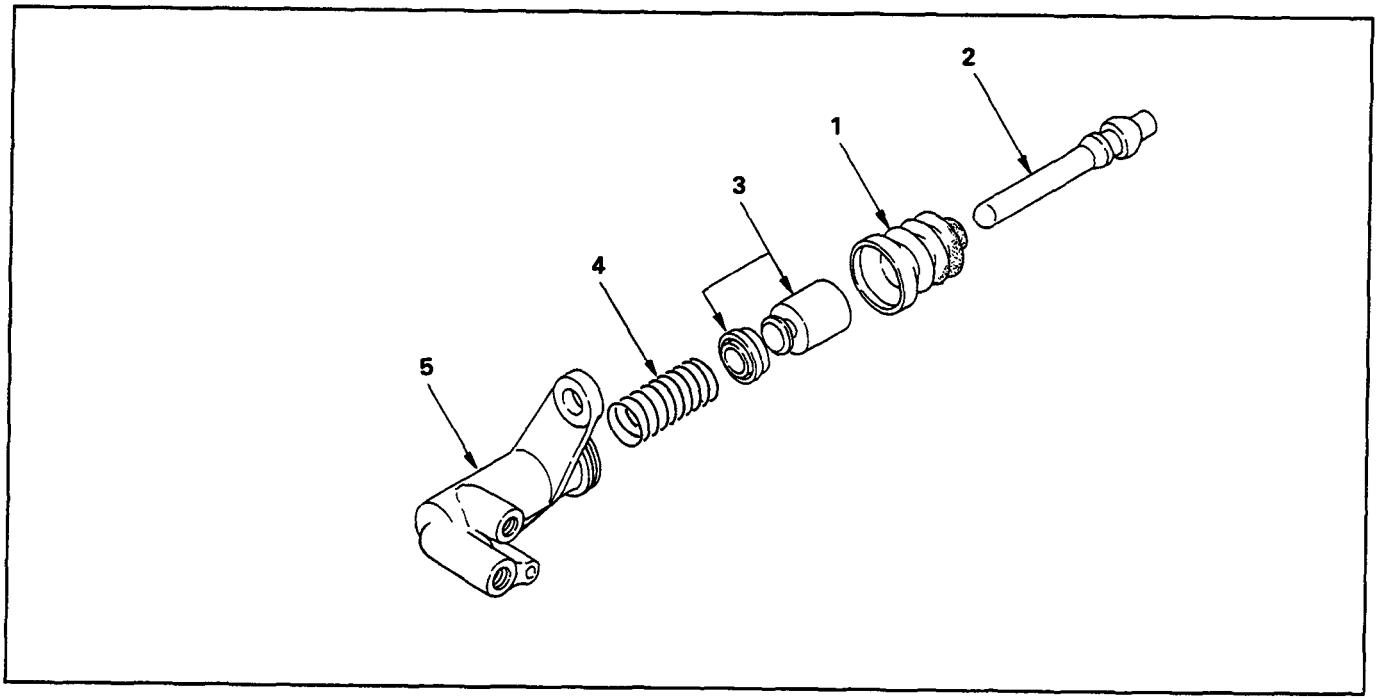

Disassembly Steps

▲ 1. Boot
2. Push rod
3. Piston and piston cup
4. Spring
5. Cylinder body
6. Solenoid switch

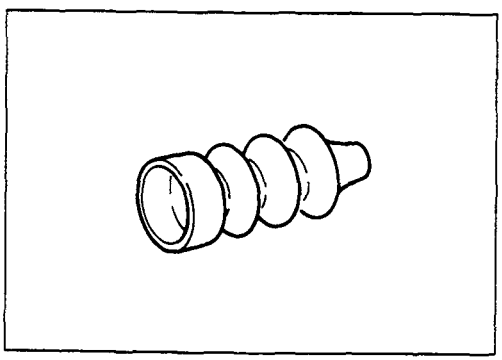

Important Operations

1. Boot

Brake fluid spilled on painted or plastic surfaces will cause serious damage. Take care not to spill brake fluid.

INSPECTION AND REPAIR

Make the necessary adjustments, repairs, and part replacements if excessive wear or damage is discovered during inspection.

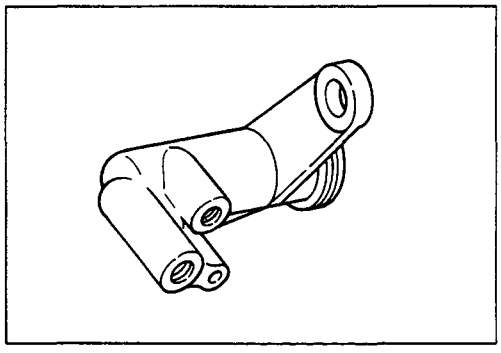

Cylinder Body

1. Clean the cylinder body.
2. Check the fluid return port for restrictions and clean it if necessary.

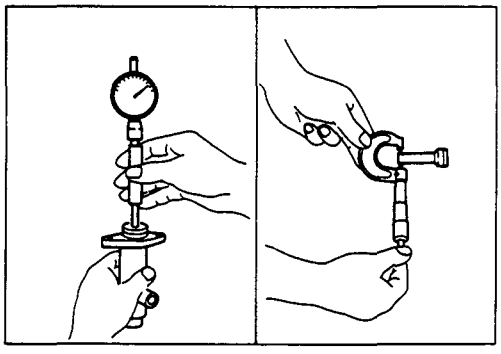

Cylinder Bore and Piston Clearance

1. Clean the cylinder body and the piston.
2. Use an inside dial indicator to measure the cylinder bore.
3. Use a micrometer to measure the piston diameter.
4. Calculate the clearance between the cylinder bore and the piston diameter.

   If the clearance exceeds the limit, the entire slave cylinder assembly must be replaced.

Cylinder Bore and Piston Clearance mm(in)

Standard	Limit
0.07 (0.0028)	0.15 (0.006)

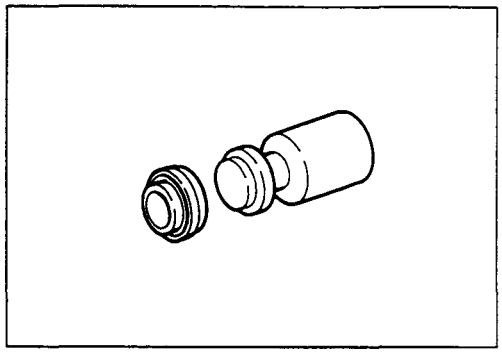

Piston and Piston Cup

Visually inspect the disassembled piston and piston cup for excessive wear and damage.

Replace the inner parts with new parts (Repair Kit A) shown in the illustration.

REASSEMBLY

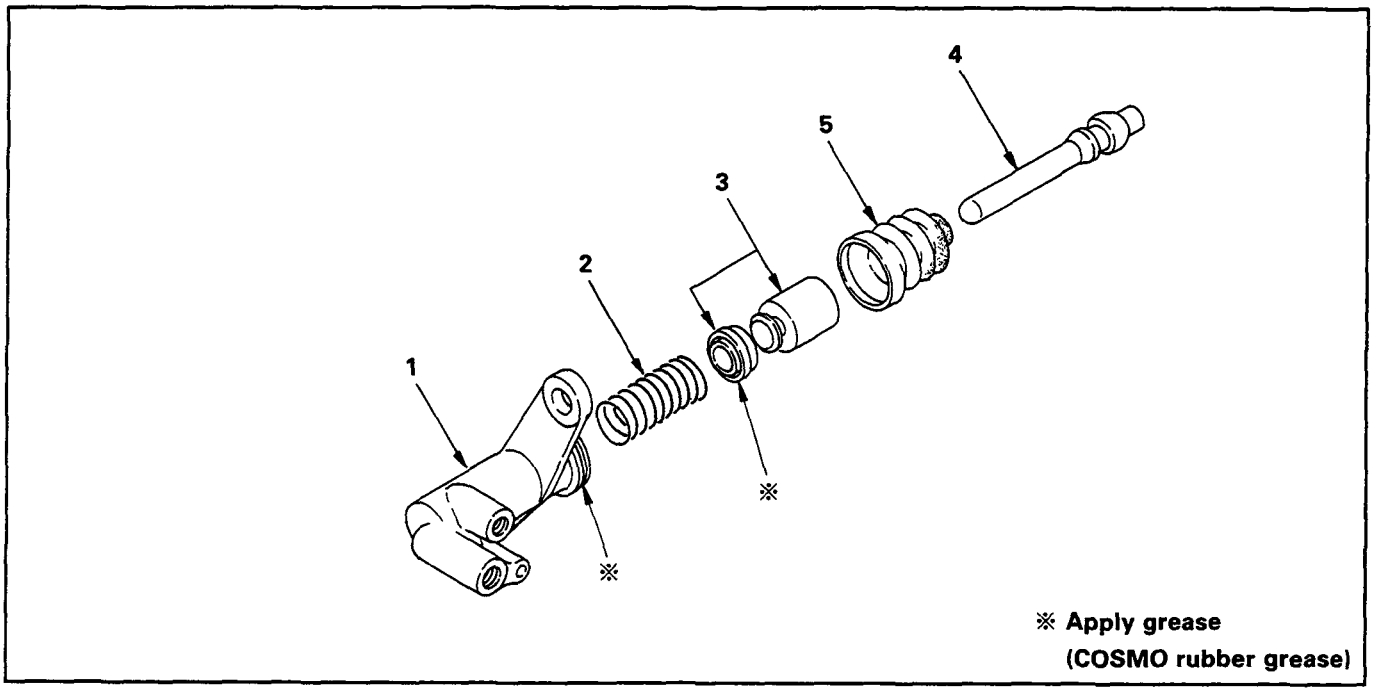

Reassembly Steps

- ▲ 1. Cylinder body
- 2. Spring
- ▲ 3. Piston and piston cup
- 4. Push rod
- 5. Boot
- 6. Solenoid switch

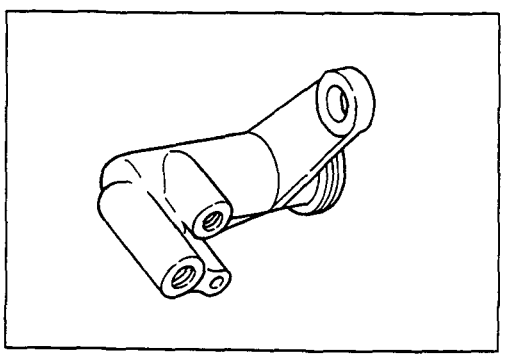

Important Operations

1. Cylinder Body

1) Clean the cylinder body.
2) Apply brake fluid to the cylinder bore.

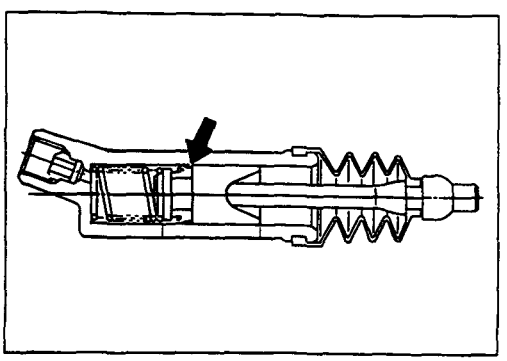

3. Piston and Piston Cup

1) Apply brake fluid to the piston and piston cup.
2) Install the cups to the piston.
   Note the installation direction of the piston cups in the illustration.
3) Install the piston and piston cup to the cylinder body.

HYDRAULIC DAMPER CYLINDER

(For 4J Engine Models)

INSPECTION AND REPAIR

Make the necessary adjustments, repairs, and part replacements if excessive wear or damage is discovered during inspection.

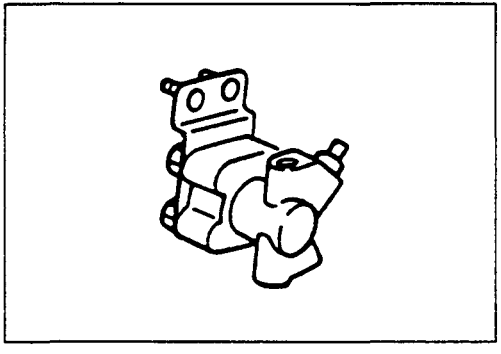

Visually check for oil leakage and other damage.
If oil leakage or other damage is discovered during the inspection; the damper cylinder assembly must be replaced as a unit.

TROUBLESHOOTING

Refer to this Section to quickly diagnose and repair clutch problems. Each troubleshooting chart has three headings arranged from left to right.

(1) Checkpoint (2) Trouble Cause (3) Countermeasure

This Section is divided into five sub-sections:

1. Clutch Slippage
2. Clutch Does Not Release Properly
3. Clutch Shudder
4. Clutch Noise
   1) Clutch Pedal Depressed (Clutch Disengaged)
   2) Clutch Pedal Not Depressed (Clutch Engaged)
5. Oil Leakage

1. CLUTCH SLIPPAGE

Checkpoint		Trouble Cause	Countermeasure
Clutch pedal free play	NG	No push rod play in the master cylinder	Adjust the push rod play
	NG	No push rod play in the slave cylinder	Adjust the push rod play
	OK		
Shift block	NG	Insufficient grease on the front cover contact surfaces	Clean and grease the shift block
	NG	Transmission front cover unevenly worn	Repair or replace the transmission front cover
	OK		
Grease or oil adhering to the facing	NG	Too much grease	Clean the related parts and/or replace the facing
	NG	Defective transmission front cover oil seal	Clean the related parts and/or replace the facing Replace the transmission front cover oil seal
	OK		

Continued on the next page

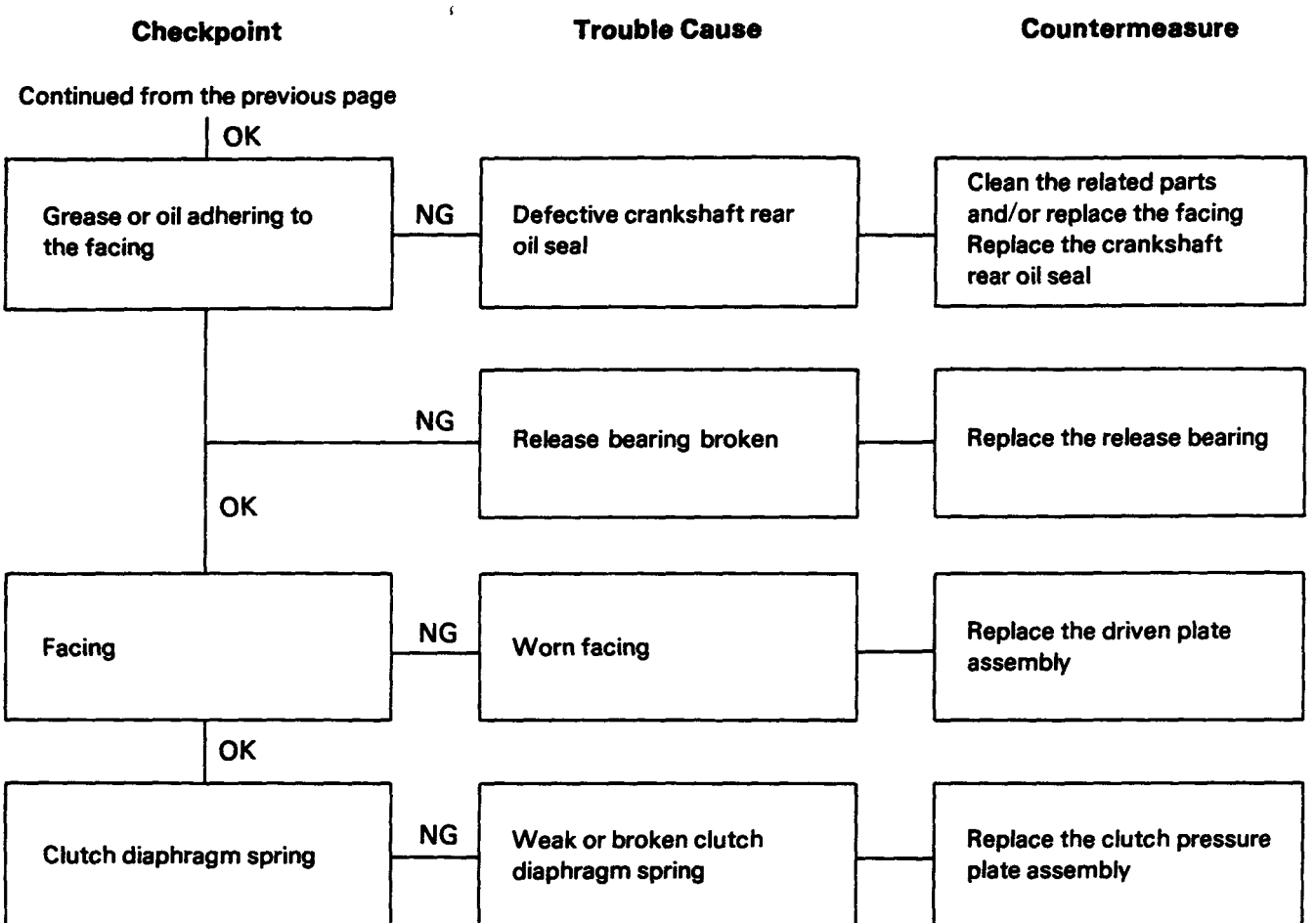
Checkpoint
Trouble Cause
Countermeasure
Continued from the previous page
OK
Grease or oil adhering to the facing
NG
Defective crankshaft rear oil seal
Clean the related parts and/or replace the facing Replace the crankshaft rear oil seal
NG
Release bearing broken
Replace the release bearing
OK
Facing
NG
Worn facing
Replace the driven plate assembly
OK
Clutch diaphragm spring
NG
Weak or broken clutch diaphragm spring
Replace the clutch pressure plate assembly

2. CLUTCH DOES NOT RELEASE PROPERLY

Checkpoint		Trouble Cause	Countermeasure
Clutch pedal free play	NG	Too much push rod play in the master cylinder	Adjust the push rod play
	NG	Too much push rod play in the slave cylinder	Adjust the push rod play
	OK		
Hydraulic circuit	NG	Air in the hydraulic circuit	Bleed the hydraulic circuit
	OK		
Driven plate	NG	Driven plate warped or unevenly worn	Replace the driven plate
	NG	Insufficient grease on the spline contact surface of the splined hub	Clean and grease the splined contact surface
	NG	Corrosion or step wear on the top gear shaft spline	Clean or repair the top gear shaft spline Replace the top gear shaft
	OK		
Pressure plate	NG	Pressure plate unevenly worn	Replace the pressure plate assembly
	OK		

Continued on the next page

Checkpoint		Trouble Cause		Countermeasure
Continued from the previous page				
OK				
Flywheel	NG	Flywheel unevenly worn	—	Repair or replace the flywheel
OK				
Crankshaft pilot bearing	NG	Top gear shaft wobble is causing pilot bearing wear	—	Replace the pilot bearing

3. CLUTCH SHUDDER

Checkpoint		Trouble Cause	Countermeasure
Power train	NG	Poorly connected components causing looseness and abrasion	Tighten the connections Repair or replace the applicable parts
Power train	OK		
Pressure plate	NG	Pressure plate unevenly worn	Replace the pressure plate assembly
Pressure plate	OK		
Grease or oil adhering to the facing	NG	Too much grease	Clean the related parts and/or replace the facing
Grease or oil adhering to the facing	NG	Defective transmission front cover oil seal	Clean the related parts and/or replace the facing Replace the transmission front cover oil seal
Grease or oil adhering to the facing	NG	Defective crankshaft rear oil seal	Clean the related parts and/or replace the facing Replace the crankshaft rear oil seal
Grease or oil adhering to the facing	OK		
Driven plate	NG	Insufficient grease on the spline contact surface of the splined hub	Clean and grease the spline contact surface
Driven plate	NG	Corrosion or step wear on the top gear shaft spline	Clean or repair the top gear shaft spline Replace the top gear shaft
Driven plate	OK		

Continued on the next page

Checkpoint		Trouble Cause	Countermeasure
Continued from the previous page			
Driven plate	NG	Loose facing rivets	Replace the driven plate assembly
	NG	Warpage and/or uneven wear	Replace the driven plate assembly
Flywheel	NG	Flywheel uneven wear	Repair or replace the flywheel

OK

OK

4. CLUTCH NOISE

1) Clutch Pedal Depressed (Clutch Disengaged)

Checkpoint		Trouble Cause	Countermeasure
Pedal shaft and sleeve	NG	Insufficient grease at the pedal shaft and sleeve	Clean and grease the pedal shaft and sleeve
	NG	Worn pedal shaft and/or sleeve	Replace the pedal shaft with the sleeve
	OK		
Master cylinder piston and push rod contact faces	NG	Insufficient grease at the master cylinder piston and push rod contact faces	Clean and grease the master cylinder piston and push rod contact faces
	OK		
Driven plate	NG	Loose or broken damper spring	Replace the driven plate assembly
	OK		
Crankshaft pilot bearing	NG	Insufficient grease at the crankshaft pilot bearing (pilot bearing worn)	Replace the crankshaft pilot bearing

2) Clutch Pedal Not Depressed (Clutch Engaged)

Driven plate damper spring	NG	Weak or broken damper spring	Replace the driven plate
	OK		
Crankshaft pilot bearing	NG	Insufficient grease at the crankshaft pilot bearing (pilot bearing worn)	Replace the crankshaft pilot bearing

5. OIL LEAKAGE

Checkpoint		Trouble Cause	Countermeasure
Master cylinder	NG	Weak or damaged piston cap	Replace the piston cap
OK			
Master cylinder fluid pipe and hose	NG	Loosely connected fluid pipe and/or hose	Tighten the fluid pipe and/or hose connections
OK			
Slave cylinder	NG	Weak or damaged piston cup	Replace the piston cup
OK			
Slave cylinder oil pipe	NG	Loosely connected oil pipe	Tighten the oil pipe connection
OK			
Fluid reservoir	NG	Loosely connected oil pipe	Tighten the oil pipe

DELTA OPEL ISUZU SUZUKI

Index

4 x 2

4 x 4

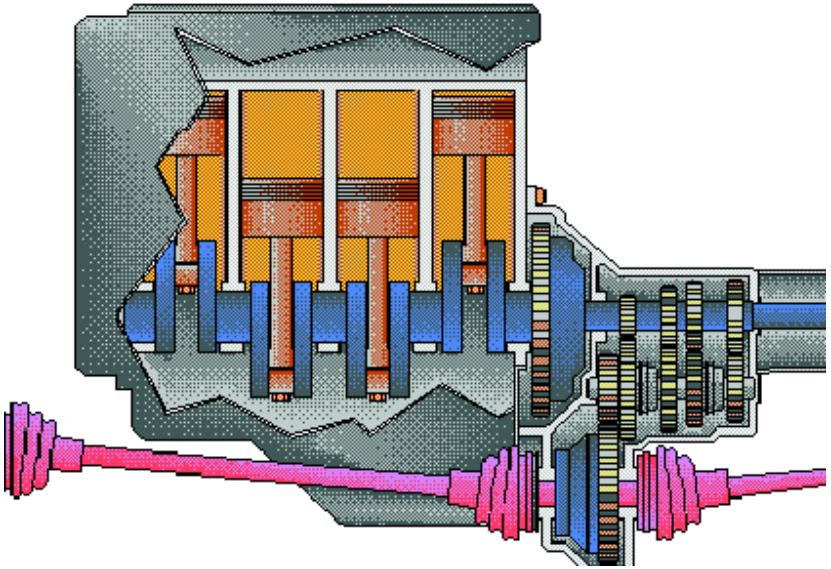

KB TF 140

MUA Gearbox

ISUZU

SECTION 7B1
MANUAL TRANSMISSION

TABLE OF CONTENTS

PAGE

4 x 2 Model Transmission ..... 7B1— 2
- Main Data and Specifications ..... 7B1— 2
- General Description ..... 7B1— 3
- Torque Specifications ..... 7B1— 4
- Recommended Liquid Gasket ..... 7B1— 6
- Removal and Installation ..... 7B1— 7
- Disassembly ..... 7B1— 15
- Inspection and Repair ..... 7B1— 25
- Reassembly ..... 7B1— 30

4 x 4 Model Transmission ..... 7B1— 45
- Main Data and Specifications ..... 7B1— 45
- General Description ..... 7B1— 46
- Torque Specifications ..... 7B1— 47
- Recommended Liquid Gasket ..... 7B1— 49
- Removal and Installation ..... 7B1— 50
- Disassembly ..... 7B1— 59
- Inspection and Repair ..... 7B1— 79
- Reassembly ..... 7B1— 85
- Troubleshooting ..... 7B1—110

4 x 2 MODEL TRANSMISSION

MAIN DATA AND SPECIFICATIONS

Models		MUA 5C	MUA 5S
Transmission type		Fully synchronized 5-forward and revers gears.	
Gear ratio	1st	3.767	4.357
	2nd	2.248	2.502
	3rd	1.404	1.501
	4th	1.000	1.000
	5th	0.809	0.809
	Rev.	3.875	3.970
Oil capacity	lit (US gal.)	2.95 (0.78)	

GENERAL DESCRIPTION

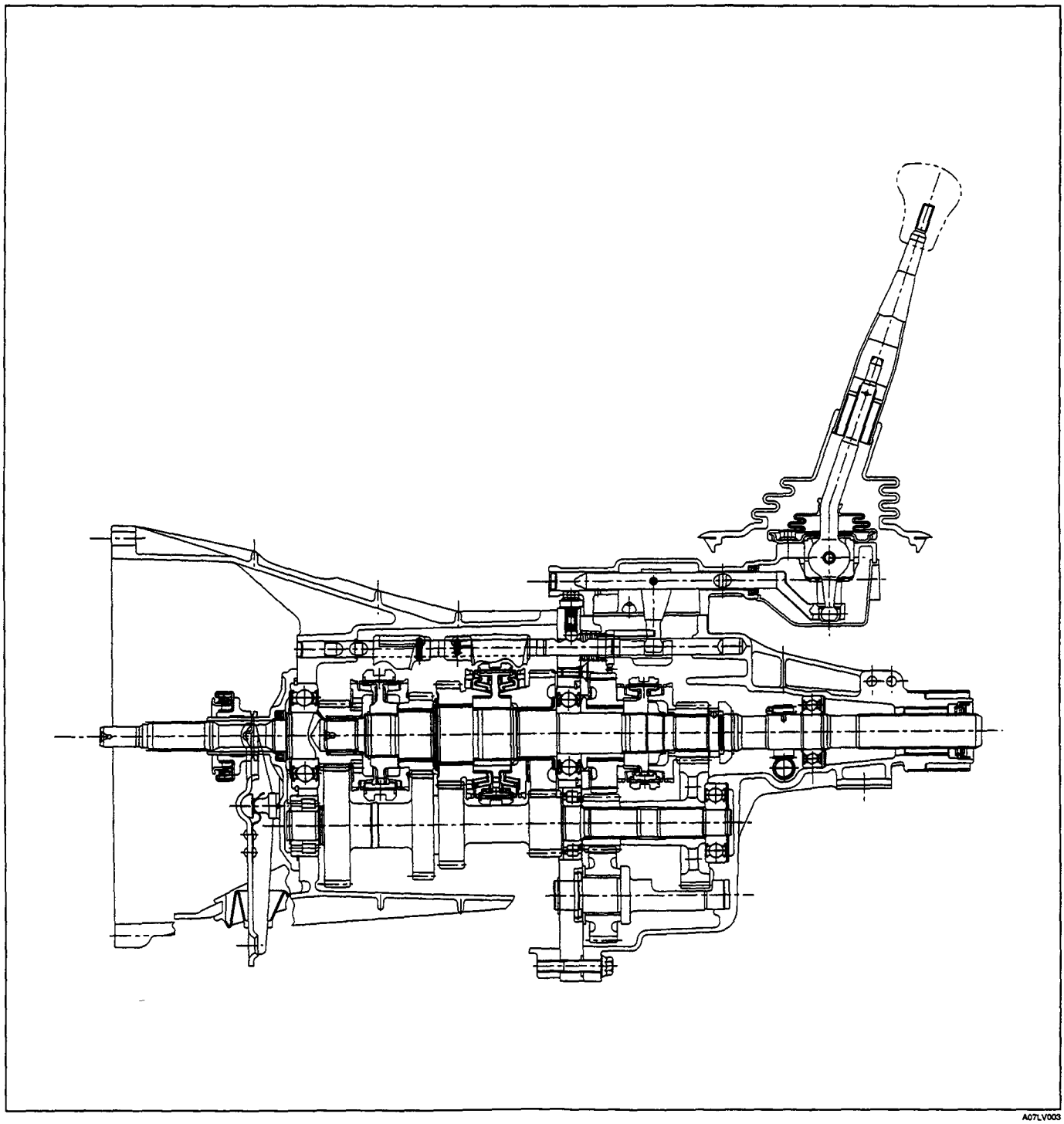

A07LV003

The transmission is designed for the quietest possible operation.

A longer center distance (77.5 mm (3.05 in)) provides increased durability.

Principle parts of the transmission are the integral clutch housing, the intermediate plate, the rear cover, and the gears.

The gear control box is built-in to the rear cover.

TORQUE SPECIFICATIONS

STANDARD BOLTS

The torque values given in the following table should be applied where a particular torque is not specified.

N·m (kg·m / lb·ft)

	Strength Class	4.8/4T	7T	8.8		9.8/9T
				Refined	Non-Refined	
	Bolt Identification	4	7	8	8	9
	Bolt Diameter× Pitch (mm)	No mark	—			
Standard Hex. Head Bolt	M6 × 1.0	6 (0.6 / 52 lb·in)	7 (0.7 / 61 lb·in)	8 (0.8 / 69 lb·in)		–
	M8 × 1.25	13 (1.3 / 113 lb·in)	17 (1.7 / 12)	20 (2.0 / 14)		24 (2.4 / 17)
	M10 × 1.25	27 (2.8 / 20)	37 (3.8 / 27)	42 (4.3 / 31)		50 (5.1 / 37)
	M12 × 1.25	61 (6.3 / 45)	76 (7.8 / 56)	87 (8.9 / 64)		95 (9.7 / 70)
	M14 × 1.5	96 (9.8 / 71)	116 (11.8 / 85)	133 (13.6 / 98)		142 (14.5 / 105)
	M16 × 1.5	130 (13.3 / 96)	170 (17.3 / 125)	193 (19.7 / 143)		200 (20.4 / 148)
	M18 × 1.5	188 (19.2 / 139)	244 (24.9 / 180)	278 (28.3 / 205)		287 (29.3 / 212)
	M20 × 1.5	258 (26.3 / 190)	337 (34.4 / 249)	385 (39.3 / 284)		396 (40.4 / 292)
	M22 × 1.5	332 (33.9 / 245)	453 (46.3 / 335)	517 (52.7 / 381)		530 (54.1 / 391)
	M24 × 2.0	449 (45.8 / 331)	570 (58.2 / 421)	651 (66.3 / 480)		692 (70.6 / 511)
	* M10 × 1.5	26 (2.7 / 20)	36 (3.7 / 27)	41 (4.2 / 30)		48 (4.9 / 35)
	* M12 × 1.75	57 (5.8 / 42)	71 (7.2 / 52)	80 (8.2 / 59)		89 (9.1 / 66)
	* M14 × 2.0	89 (9.1 / 66)	110 (11.2 / 81)	125 (12.7 / 92)		133 (13.6 / 98)
	* M16 × 2.0	124 (12.7 / 92)	162 (16.5 / 119)	185 (18.9 / 137)		191 (19.5 / 141)
Flange Bolt	M6 × 1.0	7 (0.7 / 61 lb·in)	8 (0.8 / 69 lb·in)	9 (0.9 / 78 lb·in)		–
	M8 × 1.25	15 (1.5 / 11)	19 (1.9 / 14)	22 (2.2 / 16)		26 (2.7 / 20)
	M10 × 1.25	31 (3.2 / 23)	41 (4.2 / 30)	47 (4.8 / 35)		56 (5.7 / 41)
	M12 × 1.25	69 (7.0 / 51)	85 (8.7 / 63)	97 (9.9 / 72)		106 (10.8 / 78)
	M14 × 1.5	104 (10.6 / 77)	126 (12.8 / 93)	144 (14.6 / 106)		154 (15.7 / 114)
	M16 × 1.5	145 (14.8 / 127)	188 (19.2 / 139)	214 (21.8 / 158)		221 (22.5 / 163)
	M18 × 1.5	–	–	–		–
	M20 × 1.5	–	–	–		–
	M22 × 1.5	–	–	–		–
	M24 × 2.0	–	–	–		–
	* M10 × 1.5	30 (3.1 / 22)	40 (4.1 / 30)	46 (4.7 / 34)		54 (5.5 / 40)
	* M12 × 1.75	64 (6.5 / 47)	78 (8.0 / 58)	89 (9.1 / 66)		99 (10.1 / 73)
	* M14 × 2.0	97 (9.9 / 72)	119 (12.1 / 88)	135 (13.8 / 99.7)		144 (14.7 / 107)
	* M16 × 2.0	137 (14.0 / 101)	178 (18.2 / 132)	203 (20.7 / 150)		210 (21.5 / 155)

The asterisk * indicates that the bolts are used for female-threaded parts that are made of soft materials such as casting, etc.

FLARE NUTS

N·m (kg·m / lb·ft)

Pipe diameter mm (in)	Torque	Pipe diameter mm (in)	Torque
4.76 (0.187)	16 (1.6 / 12)	10.00 (0.394)	54 (5.5 / 40)
6.35 (0.250)	26 (2.7 / 20)	12.00 (0.472)	88 (9.0 / 65)
8.00 (0.315)	44 (4.5 / 33)	15.00 (0.591)	106 (10.8 / 78)

SPECIAL PARTS FIXING NUTS AND BOLTS

kg·m(lb.ft/N·m)

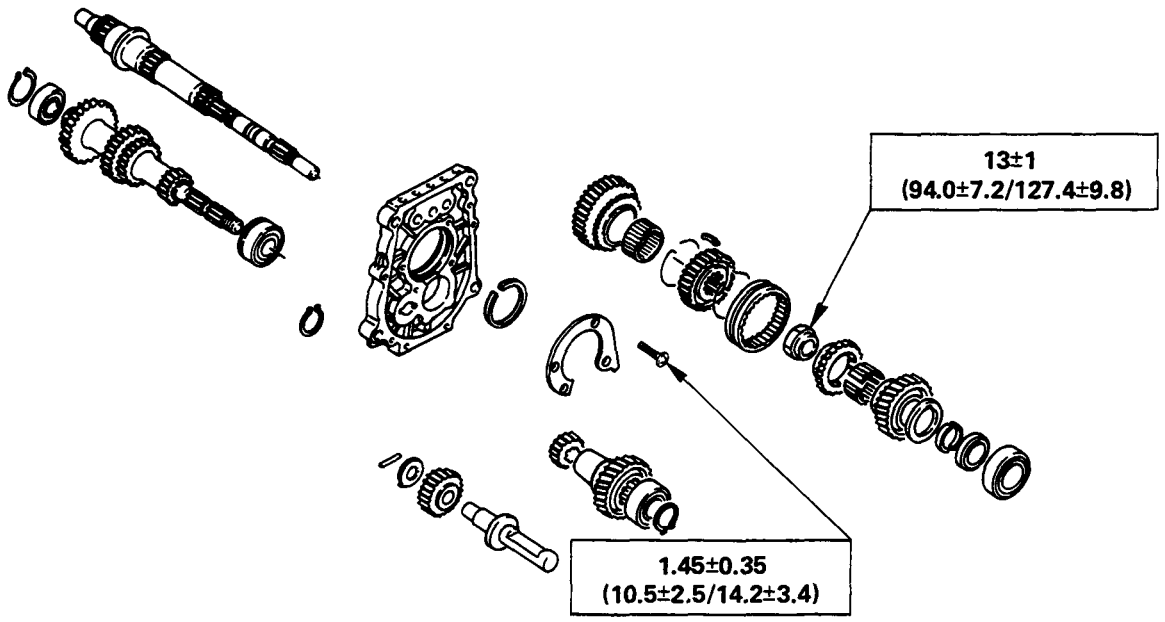

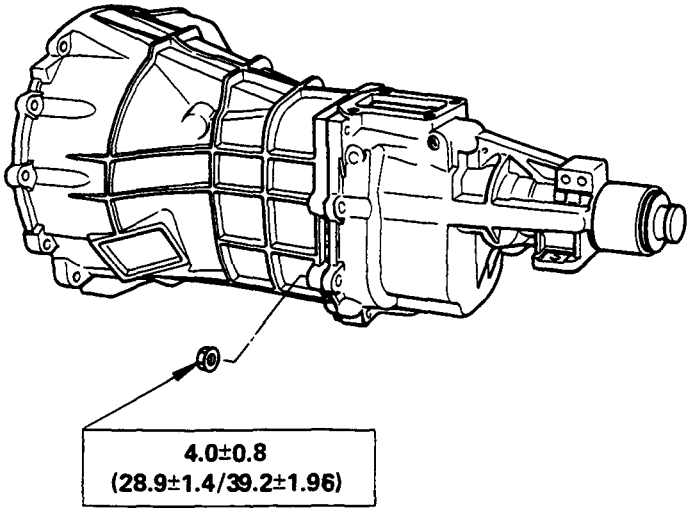

RECOMMENDED LIQUID GASKET

Type	Brand Name	Manufacturer	Remarks
RTV* Silicon Base	ThreeBond 1207B ThreeBond 1207C	Three Bond Three Bond	For Engine Repairs
	ThreeBond 1215 ThreeBond 1281	Three Bond Three Bond	For Axle Case and Transmission Repairs
Water Base	ThreeBond 1141E	Three Bond	For Engine Repairs
Solvent	ThreeBond 1104 BelcoBond 4 BelcoBond 401 BelcoBond 402	Three Bond Isuzu Isuzu Isuzu	For Engine Repairs
Anerobic	LOCTITE 515 LOCTITE 518	Loctite Loctite	All

* RTV : Room Temperature Vulcanizer

Note:

1. **It is very important that the liquid gaskets listed above or their exact equivalent be used on the vehicle.**
2. **Be careful to use the specified amount of liquid gasket.**
   Follow the manufacturer's instructions at all times.
3. **Be absolutely sure to remove all lubricants and moisture from the connecting surfaces before applying the liquid gasket.**
   The connecting surfaces must be perfectly dry.
4. **LOCTITE 515 and LOCTITE 518 harden upon contact with a metal surface.**
   Do not apply LOCTITE 515 or LOCTITE 518 between two metal surfaces having a clearance of greater than 0.25 mm (0.01 in). Poor adhesion will result.

REMOVAL AND INSTALLATION

Read this Section carefully before performing any removal and installation procedure. This Section gives you important points as well as the order of operation. Be sure that you understand everything in this Section before you begin.

Important Operations — Removal

Battery Cable

Disconnect the negative (–) cable from the battery terminal.

Engine Hood

Apply setting marks to the engine hood and the engine hood hinges before removing the engine hood.

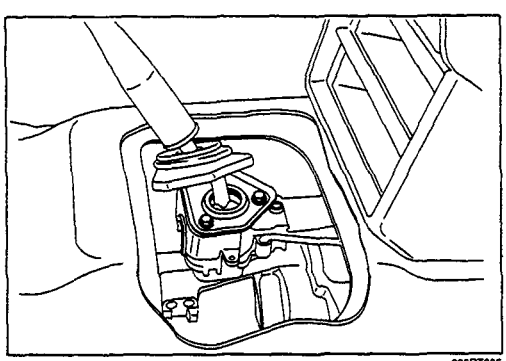

Gear Shift Lever

1. Place the gear shift lever in the neutral position.
2. Remove the gear shift lever knob.
3. Remove the front console assembly.
4. Remove the gear shift lever grommet and dust cover.
5. Remove the gear shift lever cover bolts.
6. Remove the gear shift lever.

Note:
Cover the shift lever hole to prevent the entry of foreign material into the transmission.

Lifting the Vehicle

1. Jack up the vehicle.
2. Place chassis stands at the front and the rear of the vehicle.

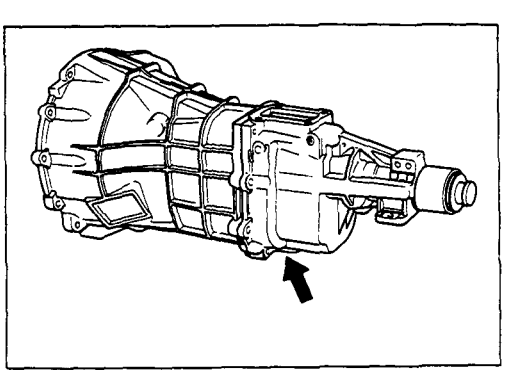

Transmission Oil Draining

1. Remove the transmission oil drain plug.
2. Replace the drain plug after draining the oil.

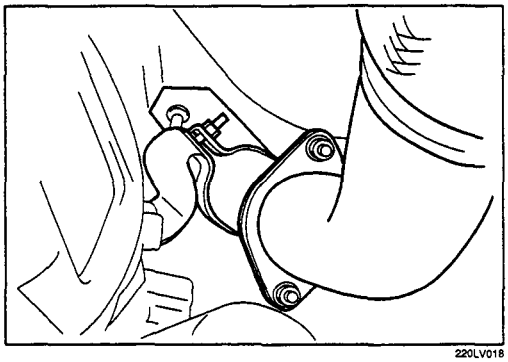

Exhaust Pipe

1. Remove the exhaust pipe bracket from the transmission case.
2. Remove the front exhaust pipe and 2nd-3rd exhaust pipe.

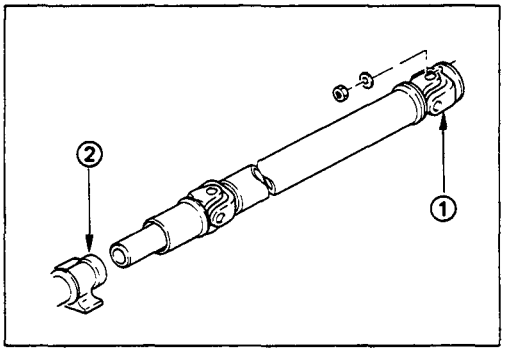

Rear Propeller Shaft (Single Shaft Type)

1. Remove the propeller shaft flange yoke at the drive pinion side ①.
2. Remove the propeller shaft from the transmission main shaft spline ②.

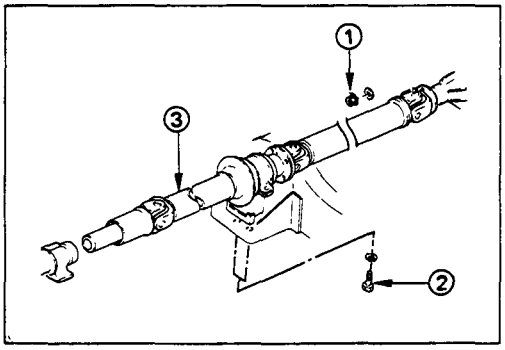

Rear Prppeller Shaft (Dual Shaft Type)

1. Apply setting marks to the 2nd propeller shaft flange yoke.
   This will prevent mispositioning during the installation procedure.
2. Remove the 2nd propeller shaft flange yoke bolts at the drive pinion side ①.
3. Remove the center bearing retainer bolts ②.
4. Remove the 1st propeller shaft ③ with the center bearing and the 2nd propeller shaft.
   Pull the 1st propeller shaft toward the rear of the vehicle unit the spline yoke is free of the transmission main shaft.

Harness Connector

Disconnect the back up light switch connector and the speedometer sensor connector.

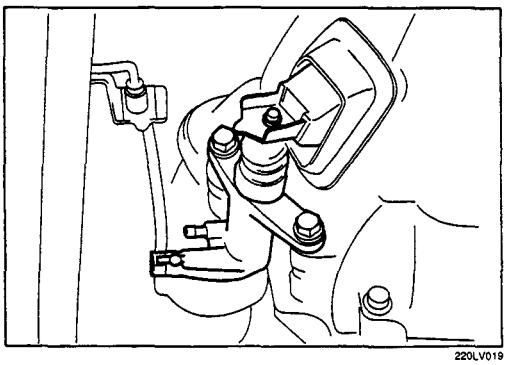

Slave Cylinder

Remove the slave cylinder from the transmission case.

Engine Lifting Hanger

1. Attach the engine lifting hanger to the front portion of the engine.
2. Attach the lifting wire to both ends of the engine lifting hanger.

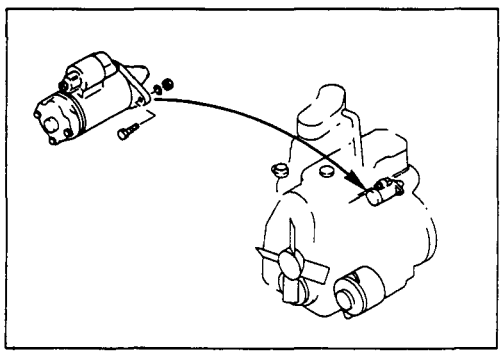

Starter Motor

Remove the starter motor from the engine rear plate.

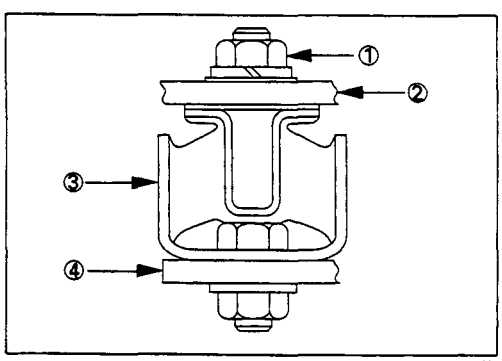

022LV001

Transmission

1. Support the transmission with a transmission jack.
2. Remove the engine rear mounting rubber nuts ① from the transmission ②.
3. Remove the rear mounting rubber ③ from the No.3 crossmember ④.
4. Remove the gear control box from the transmission.

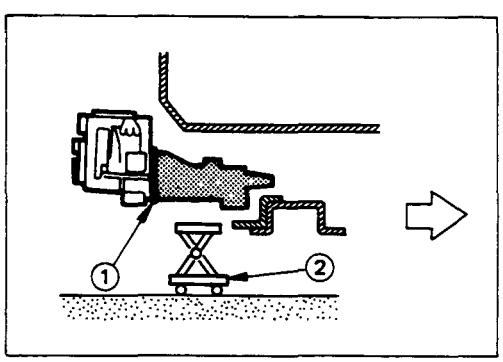

5. Remove the transmission from the engine.

   The removal of the transmission will require the cooperative efforts of two mechanics.

   1) Remove the transmission nuts and bolts ① from the engine rear plate.
   2) Place a transmission jack ② beneath the transmission.

      Do not raise the transmission jack.

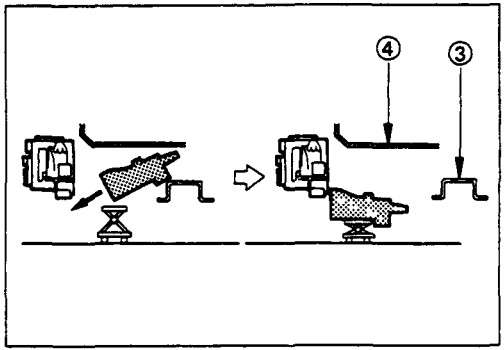

3) Manually move the transmission as far as possible toward the rear of the vehicle (into the space between the No.3 crossmember ③ and the floor panel ④.

4) Lower the clutch housing end of the transmission toward the transmission jack.

   The rear of the transmission is supported by the No. 3 crossmember at this time.

5) Firmly grasp the transmission rear cover (1st mechanic).

   Raise the transmission jack toward the transmission (2nd mechanic).

   Carefully lower the transmission onto the transmission jack.

   The transmission must be centered on the transmission jack.

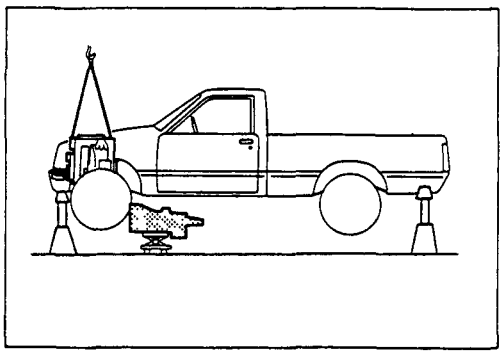

6. Carefully pull the transmission jack with the transmission from beneath the vehicle.

Important Operations — Installation

Follow the removal procedure in the reverse order to perform the installation procedure. Pay careful attention to the important points during the installation procedure.

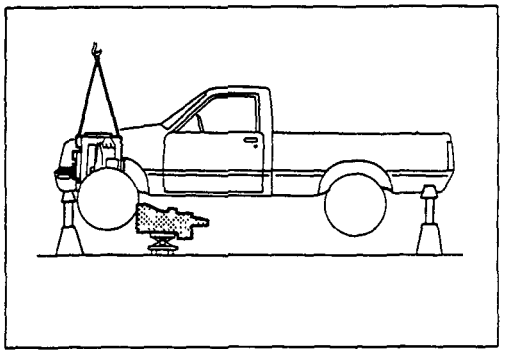

Transmission

1. Apply a thin coat of molybdenum disulfide grease to the top gear shaft spline.
2. Place the transmission on a transmission jack.
3. Carefully move the transmission jack and transmission into position behind the engine.

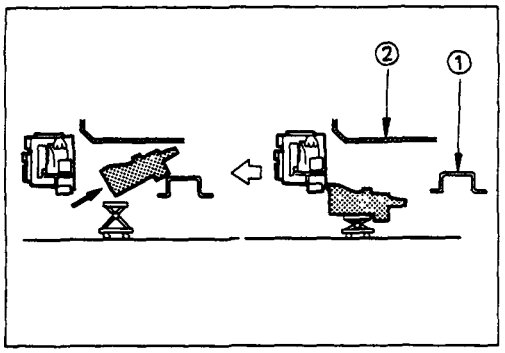

4. Slowly operate the transmission jack to raise the transmission until the rear of the transmission is at the same level as the No.3 crossmember ①.
5. Manually support the transmission rear cover.

   Move the transmission into position between the No.3 crossmember and the floor panel ②.

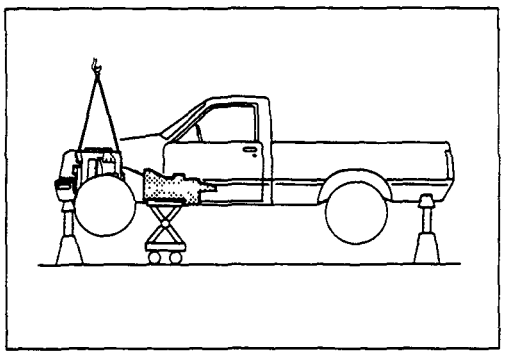

6. Slowly raise the transmission jack until the front of the transmission is aligned with the rear of the engine.

   The slope of the engine and the transmission must be the same.
7. Install the gear control box to the transmission.
8. Align the top gear shaft spline with the clutch drive plate spline.
9. Install the transmission to the engine.

   Tighten the transmission nuts and bolts to the specified torque.

Transmission Nut and Bolt Torque	kg·m(lb·ft/N·m)
M10: 4.1 ± 1.0 (30 ± 7.2/40 ± 10)	
M12: 8.0 ± 1.6 (58 ± 12/78 ± 16)	

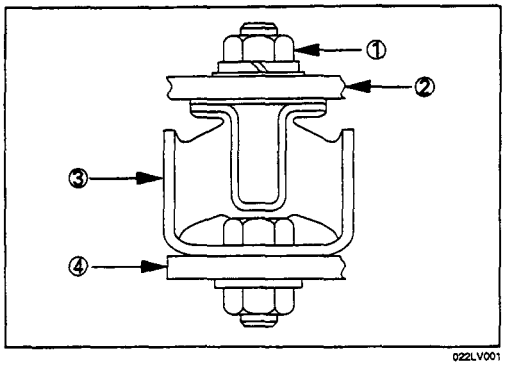

10. Install the rear mounting rubber ③ to the transmission ②.
    Install the rear mounting rubber ③ to the No.3 cross-member ④.
11. Tighten the rear mounting rubber nuts ① to the specified torque.

Rear Mounting Rubber Nut Torque	kg·m(lb·ft/N·m)
4.2 ± 0.5 (30 ± 3.6/41 ± 4.9)	

Mounting Bolt Torque	kg·m(lb·ft/N·m)
4.2 ± 0.5 (30 ± 3.6/41 ± 4.9)	

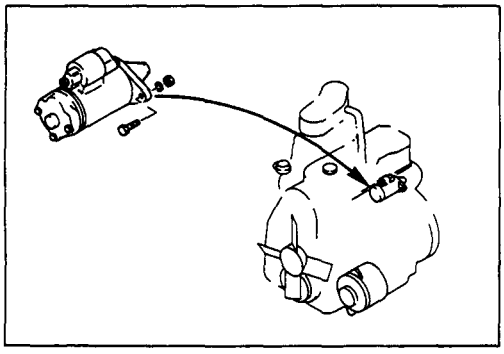

Starter Motor

1. Install the starter motor to the engine rear plate.
2. Tighten the starter motor bolts to the specified torque.

Starter Motor Bolt Torque	kg·m(lb·ft/N·m)
8.0 ± 1.6 (58 ± 12/78 ± 16)	

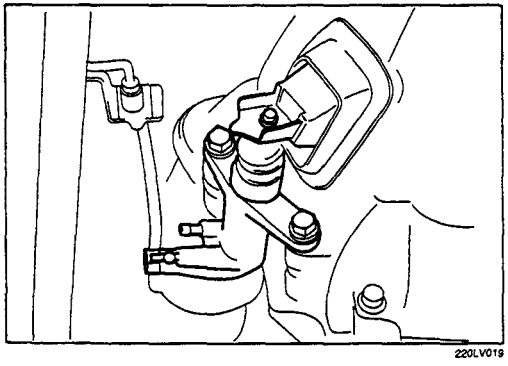

Slave Cylinder

Install the slave cylinder to the transmission case.

Slave Cylinder Bolt Torque	kg·m(lb·ft/N·m)
8.0 ± 1.6 (58 ± 12/78 ± 16)	

Harness Connector

Connect the back up light switch connector and speedometer sensor connector.

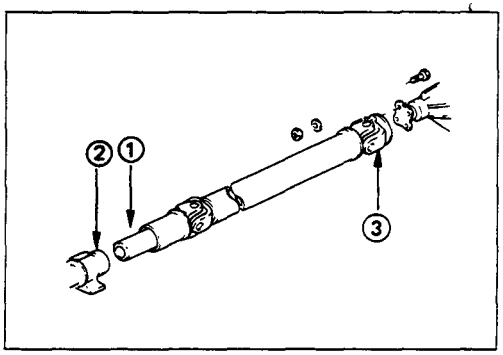

Rear Propeller Shaft (Single Shaft Type)

1. Insert the splined yoke ① with the propeller shaft into the transmission main shaft spline ②.
2. Install the propeller shaft flange yoke ③ to the drive pinion side.
3. Tighten the propeller shaft flange yoke bolt to the specified torque.

Propeller Shaft Flange Yoke Bolt Torque	kg·m(lb·ft/N·m)
6.4 ± 0.4 (46.3 ± 2.9/62.7 ± 3.9)	

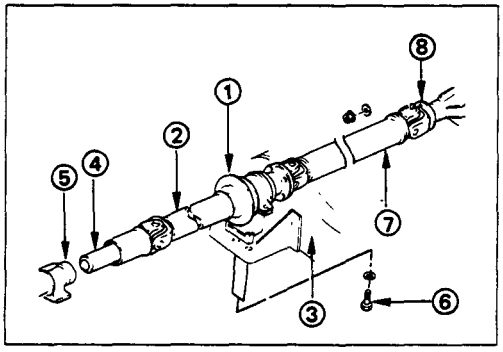

Rear Propeller Shaft (Dual Shaft Type)

1. Place the center bearing and retainer ① together with the 1st propeller shaft ② and 2nd propeller shaft ⑦ on the No.4 crossmember ③.
2. Insert the splined yoke ④ into the transmission main shaft spline ⑤.
3. Tighten the center bearing retainer bolts ⑥ to the specified torque.

Center Bearing Retainer Bolt Torque	kg·m(lb·ft/N·m)
6.2 ± 1.2 (44.8 ± 8.7/60.8 ± 11.8)	

4. Connect the 2nd propeller shaft ⑦ and drive pinion side ⑧.

   Be sure to align the setting marks applied at disassembly.
5. Tighten the coupling bolts to the specified torque.

Propeller Shaft Flange Yoke Bolt Torque	kg·m(lb·ft/N·m)
6.4 ± 0.4 (46.3 ± 2.9/62.7 ± 3.9)	

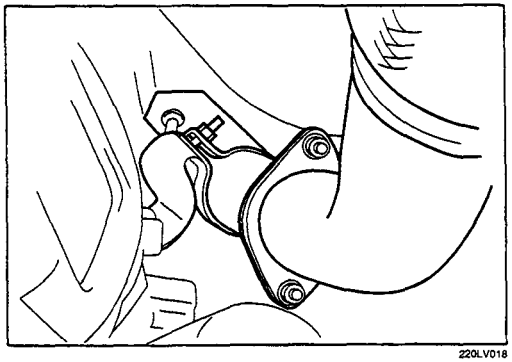

Exhaust Pipe

1. Install the front exhaust pipe and 2nd-3rd exhaust pipe.
2. Install the exhaust pipe bracket to the transmission case.

Gear Shift Lever

1. Replenish the transmission case with the specified engine oil.

Transmission Case Oil	lit(US/UK gt.)
2.95 (3.12/2.6)	

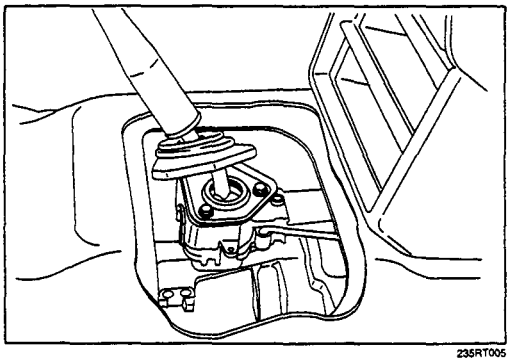

2. Install the gear shift lever to the gear control box.
3. Tighten the gear shift lever cover bolts to the specified torque.

Shift Lever Cover Bolt Torque	kg·m(lb·ft/N·m)
2.0 ± 0.2 (14.5 ± 1.5/19.6 ± 1.96)	

4. Install the dust cover and the grommet.
5 Install the front console assembly.
6. Install the gear shift lever knob.

Lowering the Vehicle

1. Place a jack beneath the vehicle.
2. Raise the jack to remove the chassis stands.
3. Lower the vehicle to the ground.

Engine Hood

Align the setting marks (applied at removal) on the engine hood and the engine hood hinges to install the engine hood.

Battery Cable

Connect the negative (–) cable to the battery terminal.

DISASSEMBLY

MAJOR COMPONENTS

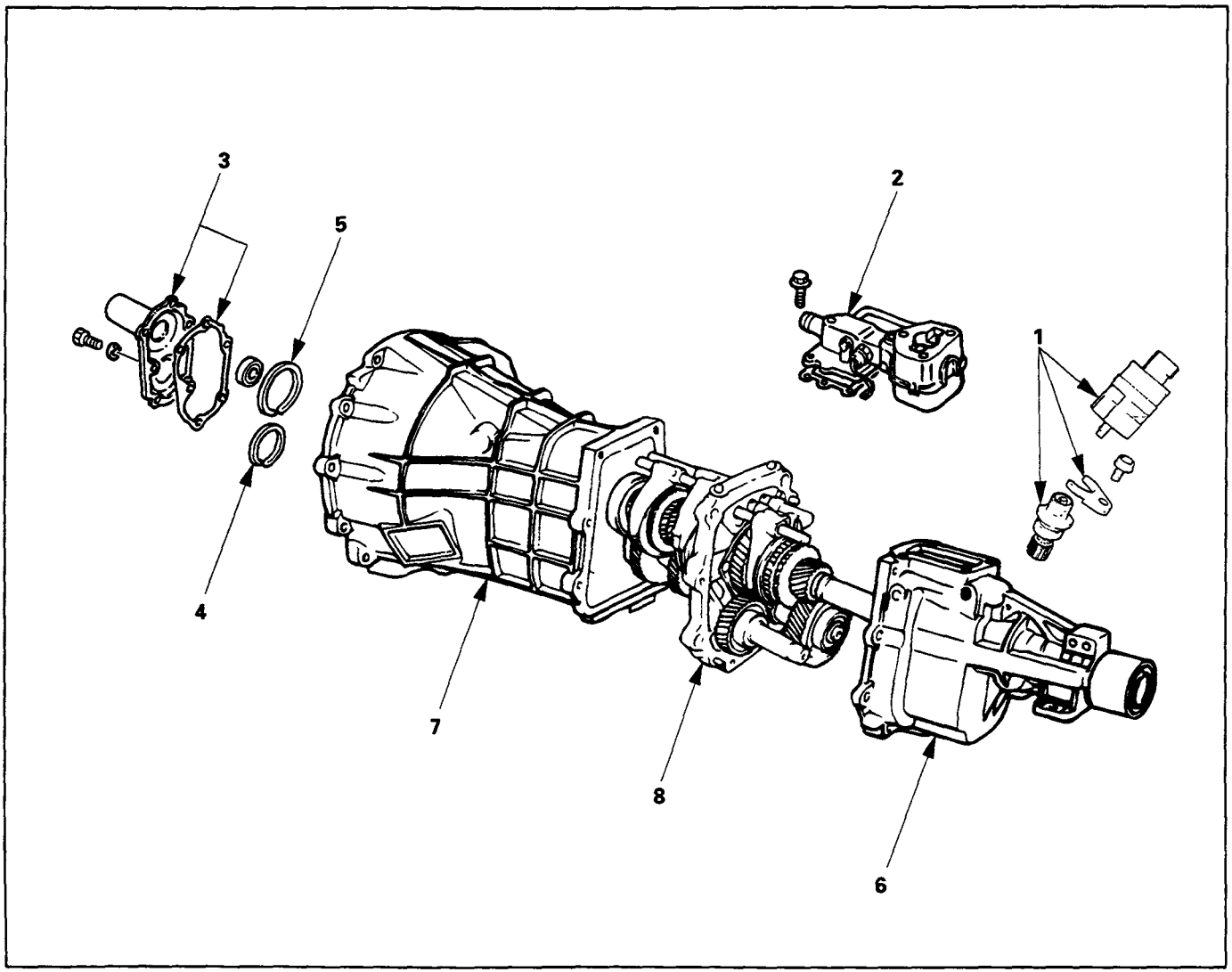

220LV004

Disassembly Steps

- ▲ 1. Speedometer sensor and speedometer driven gear
- 2. Gear control box assembly
- ▲ 3. Front cover with oil seal
- ▲ 4. Counter front bearing snap ring
- ▲ 5. Front bearing snap ring
- 6. Rear cover with oil seal
- 7. Transmission case
- 8. Intermediate plate with gear assembly

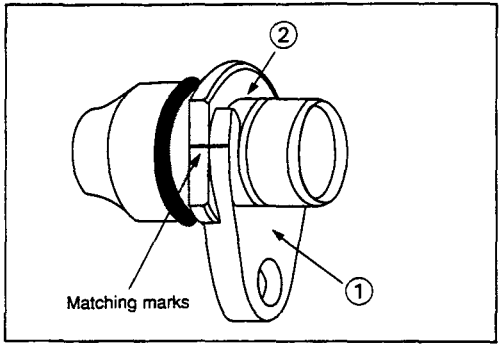

Important Operations

1. Speedometer Sensor and Speedometer Driven Gear

Mark the plate ① and bush ② alignment for reassembly.

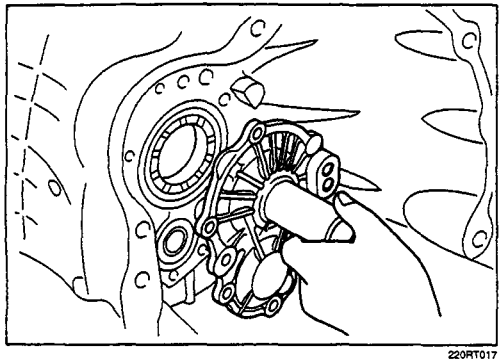

3. Front Cover with Oil Seal

Remove the front cover with oil seal from the transmission case.

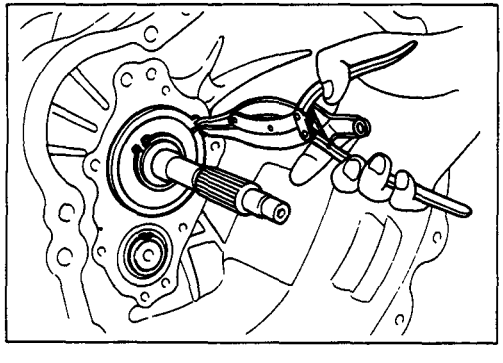

4. Counter Front Bearing Snap Ring

5. Front Bearing Snap Ring

Use a pair of snap ring pliers to remove the snap ring.

MINOR COMPONENTS

INTERMEDIATE PLATE AND GEAR ASSEMBLY, DETENT, SHIFT ARM ASSEMBLY, AND INTERLOCK PIN

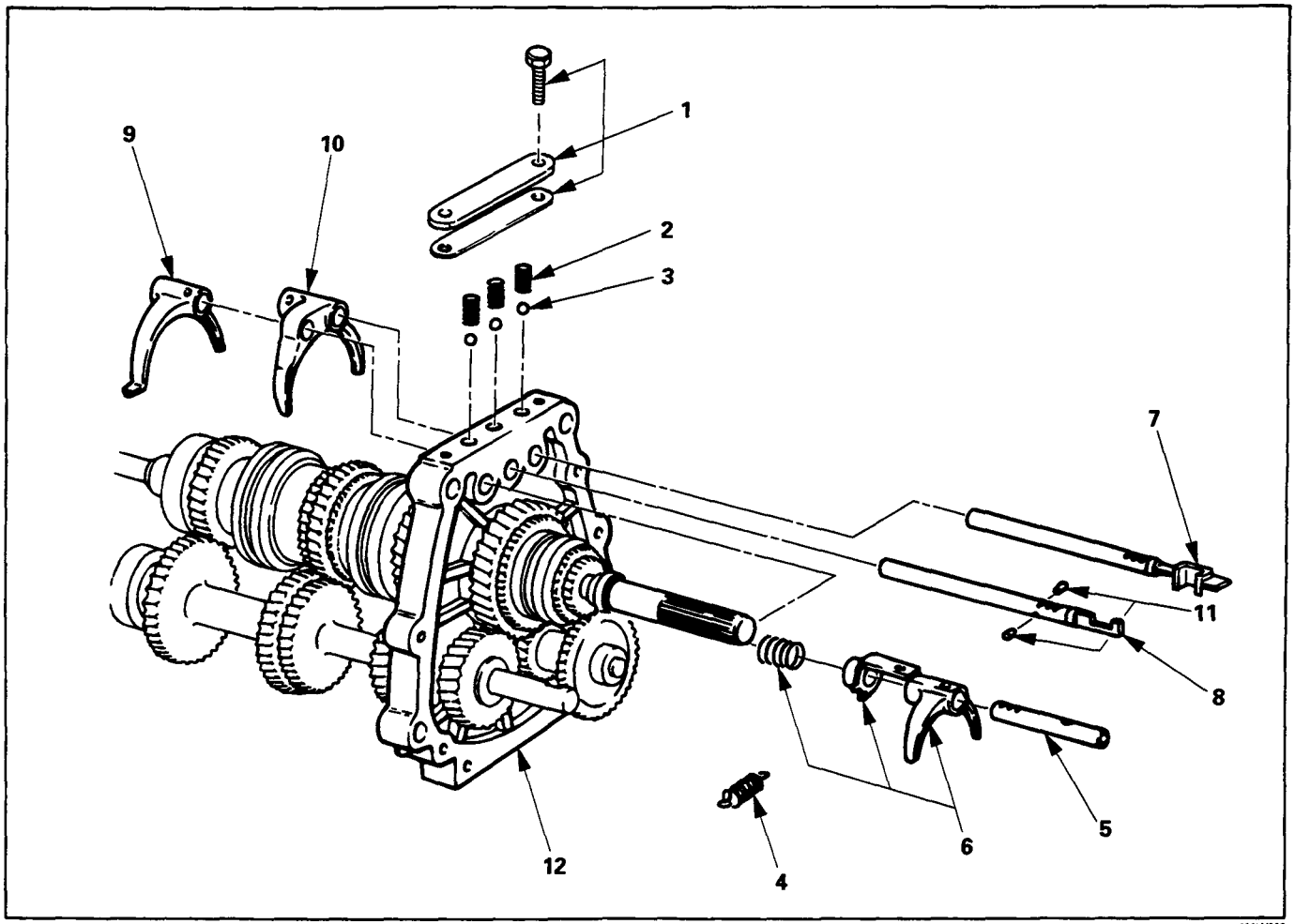

Disassembly Steps

1. Detent spring plate and gasket
2. Detent spring
3. ▲ Detent ball
4. Spring
5. Rev-5th shift rod
6. Rev-5th shift arm and reverse inhibitor
7. 1st-2nd shift rod
8. ▲ 3rd-4th shift rod
9. ▲ 3rd-4th shift arm
10. ▲ 1st-2nd shift arm
11. Interlock pin
12. Intermediate plate and gear assembly

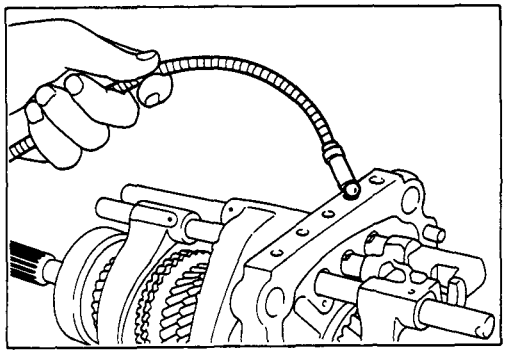

Important Operations

3. Detent Ball

Use a magnetic hand to remove the detent balls from the intermediate plate.

Take care not to lose the detent balls.

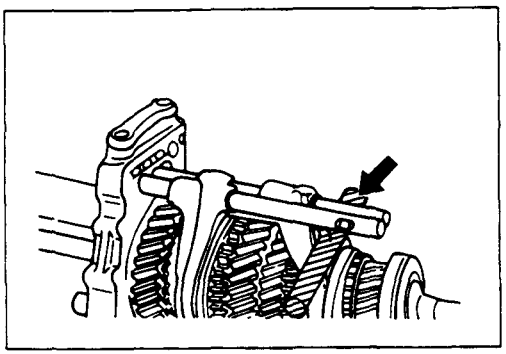

8. 3rd-4th Shift Rod

9. 3rd-4th Shift Arm

10. 1st-2nd Shift Arm

1) Hold a round bar against the shift arm end.
   This will prevent damage to other components.

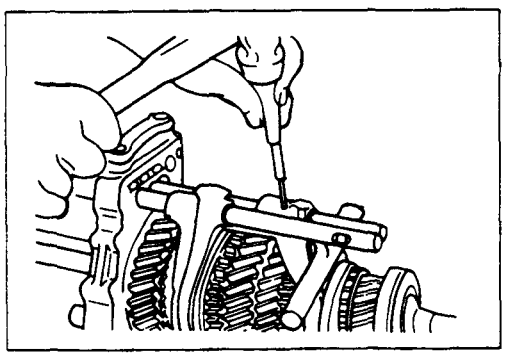

2) Use a spring pin remover to remove the shift arm spring pin from the shift arm and the shift rod.
3) Move the 3rd-4th shift rod forward.
   Take care not to lose the interlock pins.

REVERSE GEAR AND 5TH GEAR

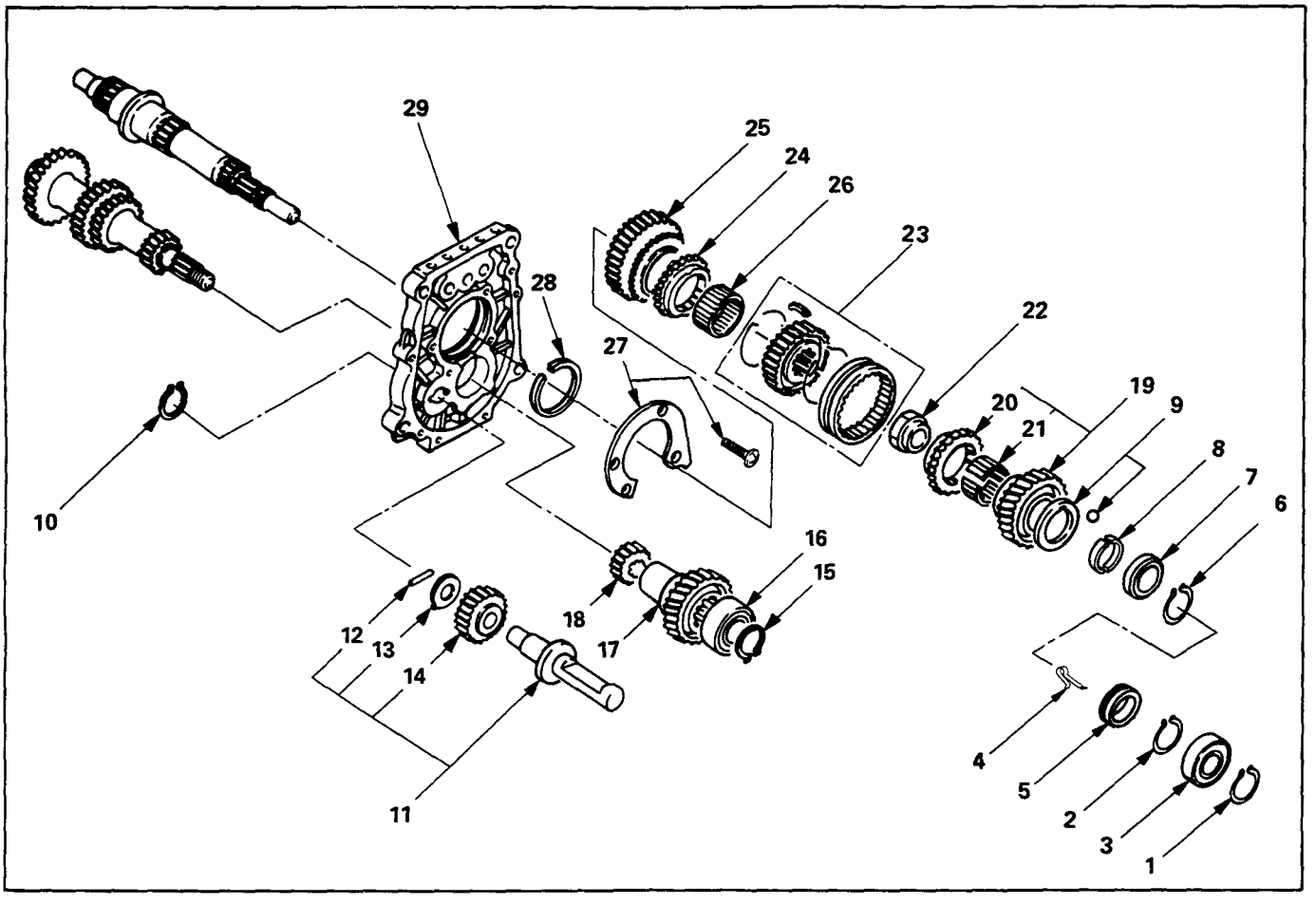

Disassembly Steps

1. Bearing snap ring
2. Bearing snap ring
▲ 3. Ball bearing
4. Clip
5. Speedometer drive gear
6. Retainer snap ring
7. Retaining ring
8. Thrust plate
9. Thrust washer and lock ball
▲ 10. Reverse gear snap ring
11. Reverse shaft
12. Idler shaft pin
13. Thrust washer
14. Reverse idler gear
15. Bearing snap ring
▲ 16. Ball bearing
▲ 17. Counter 5th gear
18. Counter reverse gear
19. 5th gear
20. 5th block ring
▲ 21. Needle bearing
▲ 22. Mainshaft nut
▲ 23. Rev-5th synchronizer assembly
▲ 24. Reverse block ring
▲ 25. Reverse gear
26. Needle bearing
▲ 27. Bearing plate and screw
▲ 28. Bearing snap ring
▲ 29. Intermediate plate

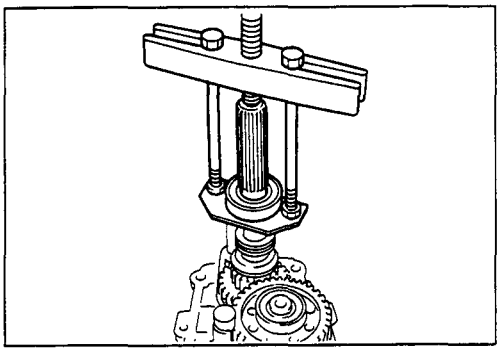

Important Operations

3. Ball Bearing

Set the bearing remover to the bearing and the mainshaft end to remove the bearing.

Bearing Remover : 5-8840-2155-0 (J-32717)
Puller : 5-8840-2027-0

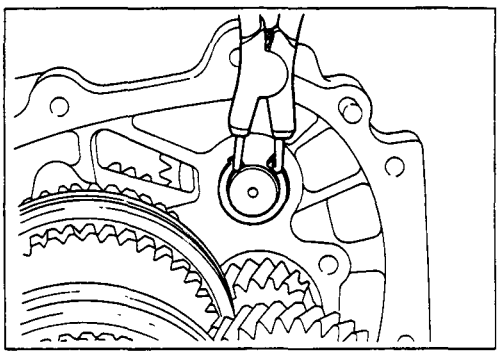

10. Reverse Gear Snap Ring

Use a pair of snap ring pliers to remove the snap ring.

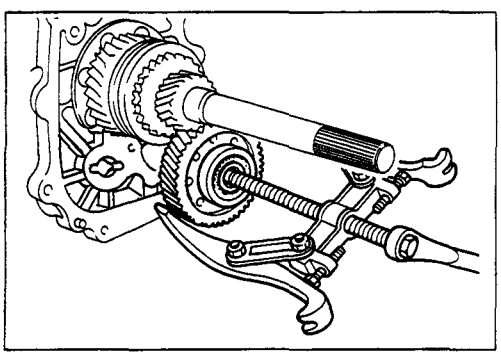

16. Ball Bearing
17. Counter 5th Gear

Use the bearing remover to remove the bearing.

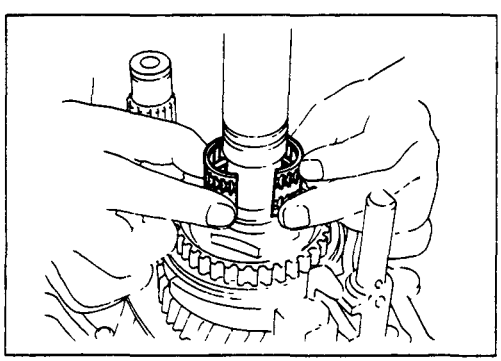

21. Needle Bearing

Remove the needle bearing (2 piece type).

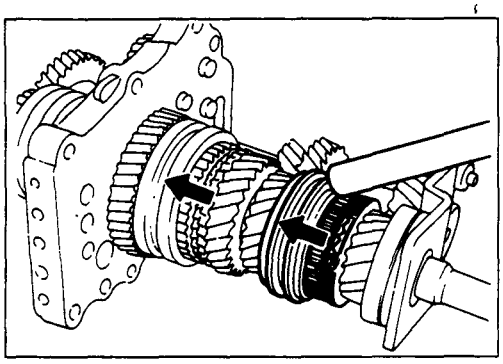

22. Mainshaft Nut

1) Engage the 3rd-4th synchronizer with the 3rd gear.
2) Engage the 1st-2nd synchronizer with the 1st gear.
3) Attach the holding fixture to the mainshaft and the counter gear.

   Holding Fixture: 5-8840-2160-0 (J-37224)

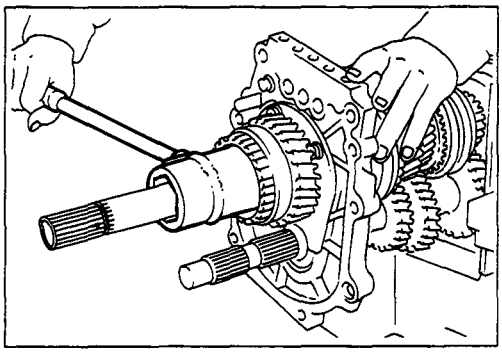

4) Use the mainshaft nut wrench to remove the mainshaft nut.

   Wrench: 5-8840-2156-0 (J-37219)

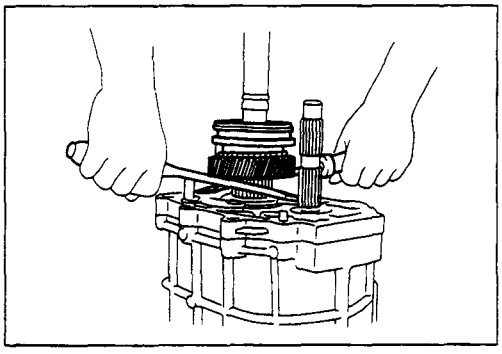

23. Rev.-5th Synchronizer Assembly

24. Reverse Ring

25. Reverse Gear

Use screw drivers between the reverse gear and bearing plate to remove the Rev.-5th synchronizer assembly together with reverse ring and gear.

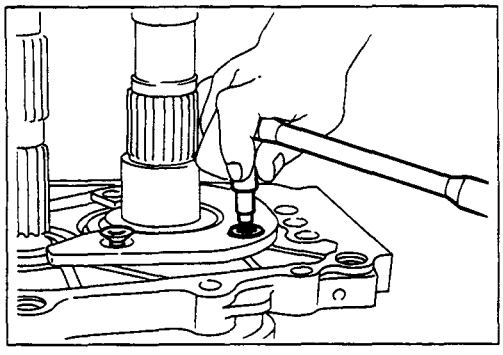

27. Bearing Plate and Screw

Use the torx bit wrench to remove the bearing plate screw from the intermediate plate.

Torx Bit Wrench: 5-8840-0047-0 (J-37225 : T45)

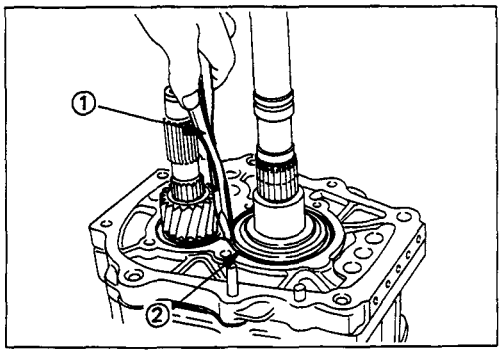

28. Bearing Snap Ring

29. Intermediate Plate

1) Insert the snap ring pliers into the mainshaft bearing snap ring hole.
2) Use the snap ring pliers ① to force open the mainshaft bearing snap ring ②.

   Hold the snap ring open with the pliers.
3) Push the intermediate plate toward the rear of the transmission to remove it.

   The ball bearing snap ring will come free.

TOP GEAR SHAFT, MAIN GEAR SHAFT, AND COUNTER GEAR

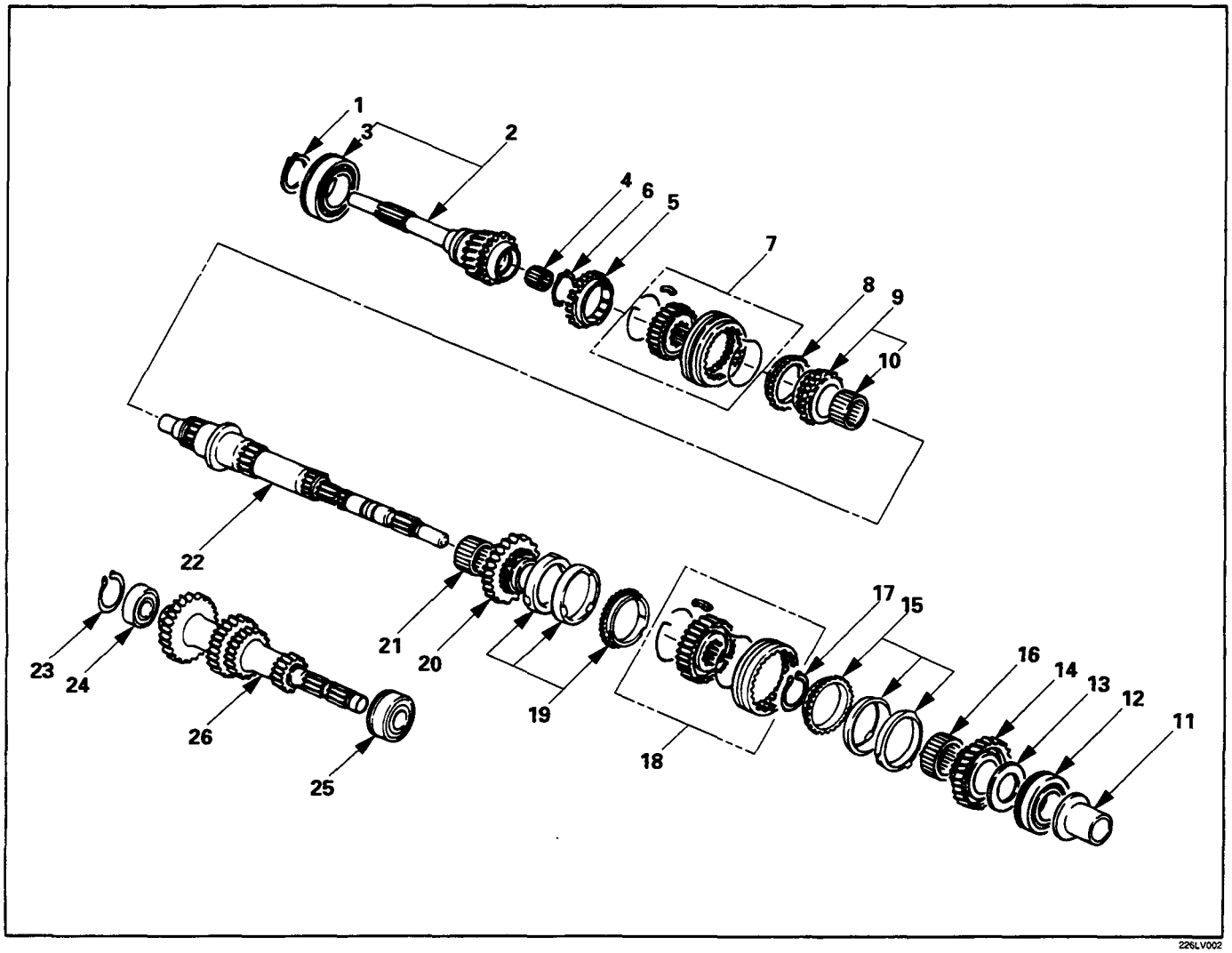

Disassembly Steps

1. Top gear shaft snap ring
2. Top gear shaft
▲ 3. Top gear ball bearing
4. Needle bearing
5. Top block ring
▲ 6. Mainshaft snap ring
▲ 7. 3rd-4th synchronizer assembly
8. 3rd block ring
9. 3rd gear
10. Needle bearing
▲ 11. Needle bearing collar
▲ 12. Mainshaft ball bearing
▲ 13. 1st gear thrust bearing and plate
▲ 14. 1st gear
15. 1st block ring (set)
16. Needle bearing
▲ 17. Clutch hub snap ring
▲ 18. 1st-2nd synchronizer assembly
▲ 19. 2nd block ring (set)
▲ 20. 2nd gear
21. Needle bearing
22. Mainshaft
23. Bearing snap ring
▲ 24. Counter gear front bearing
25. Counter gear center bearing
26. Counter gear

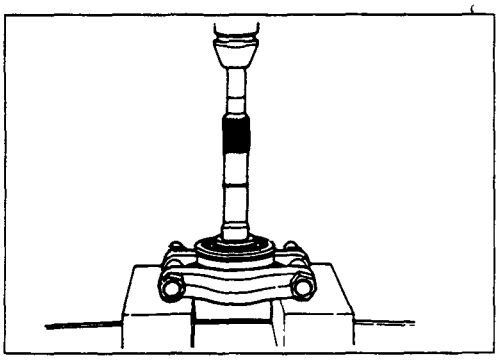

Important Operations

3. Top Gear Ball Bearing

Use a bench press and the bearing replacer to remove the ball bearing.

Bearing Replacer : 5-8840-0015-0 (J-22912-01)

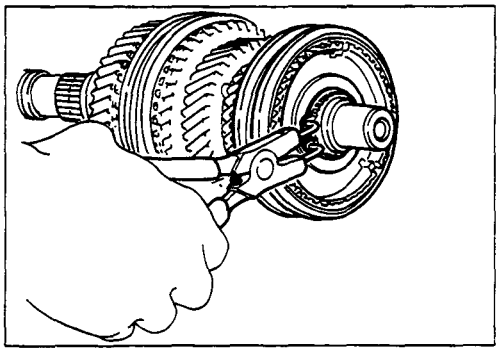

6. Mainshaft Snap Ring

Use a pair of snap ring pliers to remove the snap ring.

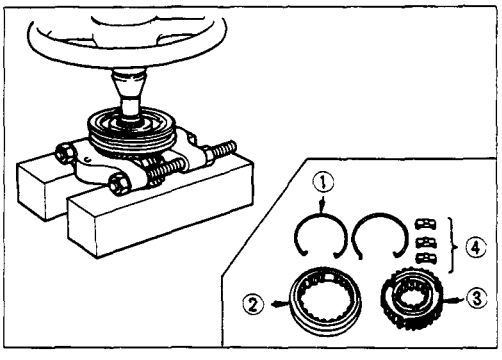

7. 3rd-4th Synchronizer Assembly

1) Use a bench press and the bearing replacer to remove the synchronizer assembly as a set.
2) Disassemble the synchronizer assembly.
   ① Springs
   ② Sleeve
   ③ Clutch Hub
   ④ Inserts

Note:

Mark the hub and sleeve alignment for reassembly.

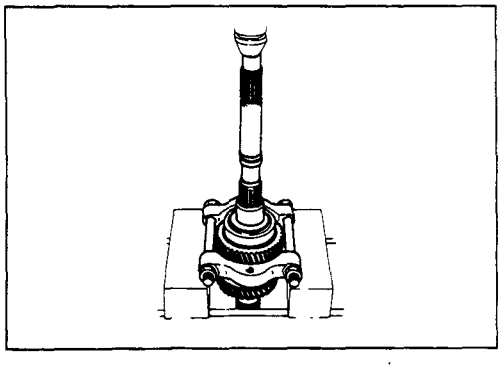

11. Needle Bearing Collar

12. Mainshaft Ball Bearing

13. 1st Gear Thrust Bearing and Plate

14. 1st Gear

Use a bench press and the bearing replacer to remove the ball bearing.

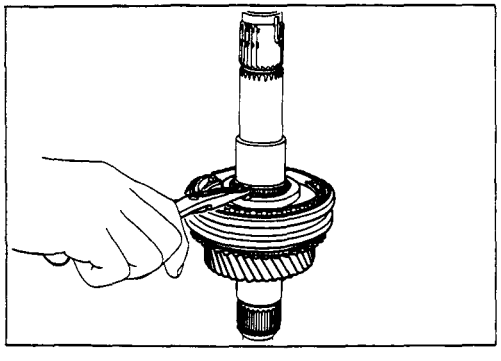

17. Clutch Hub Snap Ring

Use a pair of snap ring pliers to remove the snap ring.

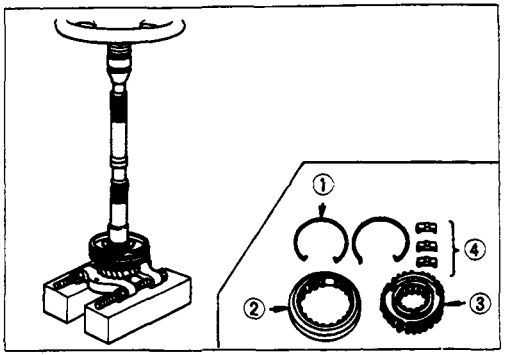

18. 1st-2nd Synchronizer Assembly

19. 2nd Block Ring (Set)

20. 2nd Gear

1) Use a bench press and the bearing remover to remove the 2nd gear together with synchronizer assembly.

   Remover: 5-8840-0015-0 (J-22912-01)

2) Disassemble the synchronizer assembly.

   ① Springs
   ② Sleeve
   ③ Clutch Hub
   ④ Inserts

Note:

Mark the hub and sleeve alignment for reassembly.

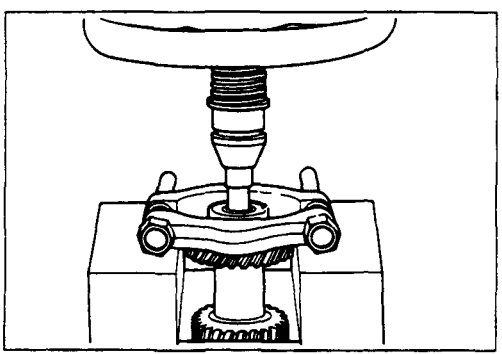

24. Counter Gear Front Bearing

Use a bench press and the bearing remover to remove the bearing.

Bearing Remover : 5-8840-0015-0 (J-22912-01)

INSPECTION AND REPAIR

Make the necessary adjustments, repairs, and part replacements if excessive wear or damage is discovered during inspection.

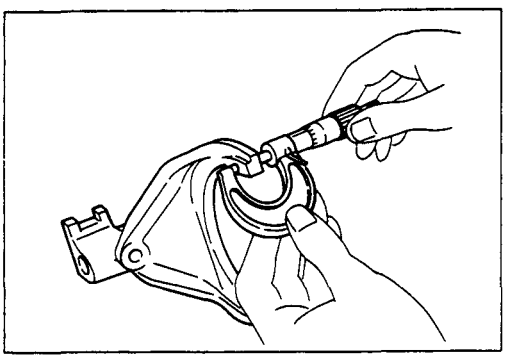

SHIFT ARM THICKNESS

Use a micrometer to measure the shift arm thickness.
If the measured value is less than the specified limit, the shift arm must be replaced.

Shift Arm Thickness — mm(in)

	Standard	Limit
1st–2nd	9.60–9.85 (0.378–0.388)	9.0 (0.354)
3rd–4th Rev.–5th	9.60–9.80 (0.378–0.386)	

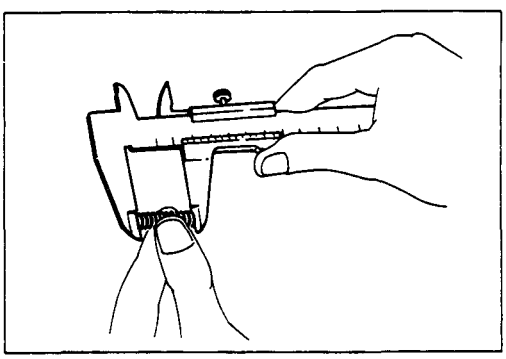

DETENT SPRING FREE LENGTH

Use a venier caliper to measure the detent spring free length.

If the measured value is less than the specified limit, the detent spring must be replaced.

Detent Spring Free Length — mm(in)

Standard	Limit
26.8 (1.06)	26.2 (1.03)

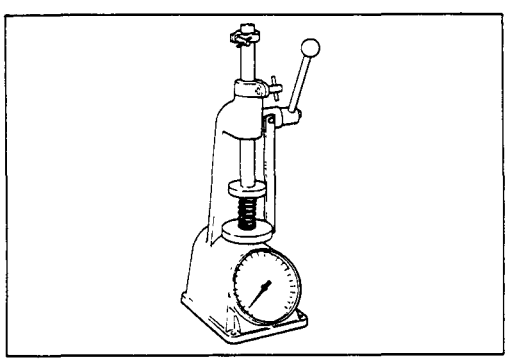

DETENT SPRING TENSION

Use a spring tester to measure the detent spring tension.

If the measured value is less than the specified standard, the detent spring must be replaced.

Detent Spring Tension — kg(lb/N)

Compressed Height	Standard
20 mm (0.787 in)	8.9–9.9 (19.6–21.8/87.2–97)

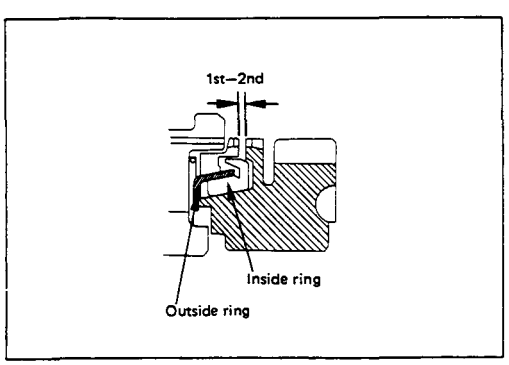

BLOCK RING AND DOG TEETH CLEARANCE

Use a thickness gauge to measure the clearance between the block ring and the dog teeth.

If the measured value exceeds the specified limit, the block ring must be replaced.

Block Ring and Dog Teeth Clearance — mm(in)

Standard	Limit
1.5 (0.059)	0.8 (0.032)

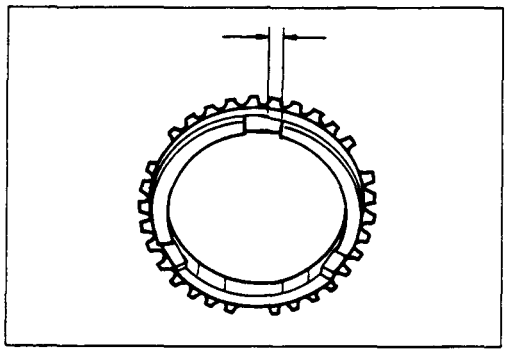

BLOCK RING AND INSERT CLEARANCE

Use a vernier caliper or thickness gauge to measure the clearance between the block ring and the insert.

If the measured value exceeds the specified limit, the block ring and the insert must be replaced.

Block Ring and Insert Clearance mm(in)

	Standard	Limit
3rd-4th	3.46–3.74 (0.136–0.147)	4.0 (0.158)
1st-2nd	4.34–4.66 (0.171–0.183)	4.9 (0.193)
Rev.-5th	3.59–3.91 (0.141–0.154)	4.1 (0.161)

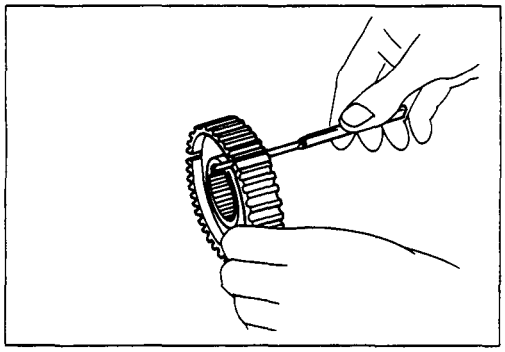

CLUTCH HUB AND INSERT CLEARANCE

Use a thickness gauge to measure the clearance between the clutch hub and the insert.

If the measured value exceeds the specified limit, the clutch hub and the insert must be replaced.

Clutch Hub and Insert Clearance mm(in)

	Standard	Limit
3rd-4th	0.01-0.19 (0.0004-0.0075)	0.4 (0.016)
1st-2nd Rev.-5th	0.09-0.31 (0.0035-0.0122)	

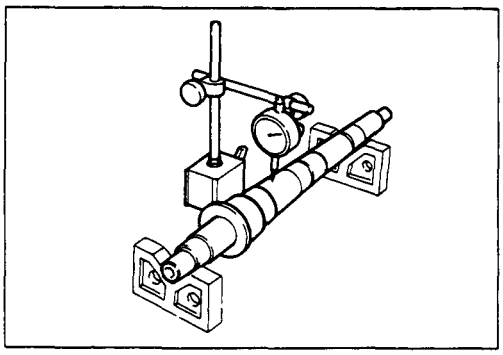

MAINSHAFT RUN-OUT

1. Install the mainshaft to a grinding machine.
2. Use a dial indicator to measure the mainshaft central portion run-out.

   If the measured mainshaft run-out exceeds the specified limit, the mainshaft must be replaced.

Mainshaft Run Out mm(in)

Limit
0.05 (0.0020)

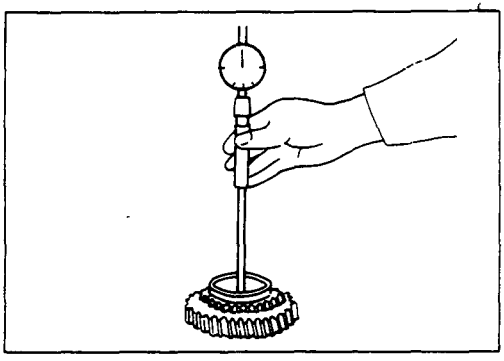

GEAR INSIDE DIAMETER

Use an inside dial indicator to measure the gear inside diameter.

If the measured value is less than the specified limit, the gear must be replaced.

Gear Inside Diameter mm(in)

	Standard	Limit
1st 3rd	45.000-45.013 (1.771-1.772)	45.100 (1.776)
2nd	52.000-52.013 (2.047-2.048)	52.100 (2.051)
Rev.	48.000-48.013 (1.889-1.890)	48.100 (1.894)
5th	32.000-32.013 (1.259-1.260)	32.100 (1.264)

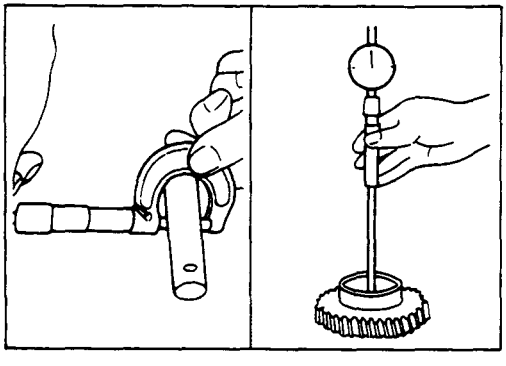

REVERSE IDLER GEAR AND IDLER GEAR SHAFT CLEARANCE

1. Use a micrometer to measure the idler gear shaft diameter.
2. Use an inside dial indicator to measure the idler gear inside diameter.
3. Calculate the idler gear and idler gear shaft clearance.

   Idler gear inside diameter – idler gear shaft diameter = idler gear and idler gear shaft clearance.

   If the measured value exceeds the specified limit, the idler gear and/or the idler gear shaft must be replaced.

Idler Gear and Idler Gear Shaft Clearance mm(in)

Standard	Limit
0.041 – 0.074 (0.0016 – 0.0029)	0.150 (0.0059)

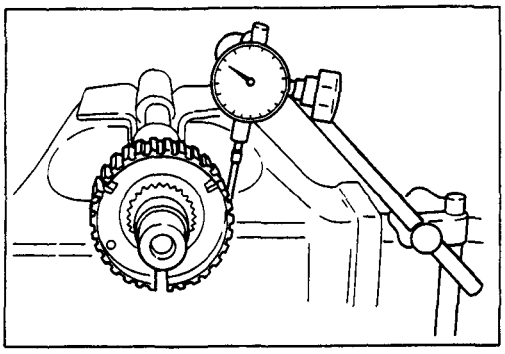

CLUTCH HUB SPLINE PLAY

1. Set a dial indicator to the clutch hub to be measured.
2. Move the clutch hub as far as possible to both the right and the left.

   Note the dial indicator reading.

   It the measured value exceeds the specified limit, the clutch hub must be replaced.

Clutch Hub Spline Play mm(in)

	Standard	Limit
1st-2nd 3rd-4th	0-0.1 (0-0.0039)	0.2 (0.0079)
Rev.-5th	0-0.2 (0-0.0079)	0.3 (0.0118)

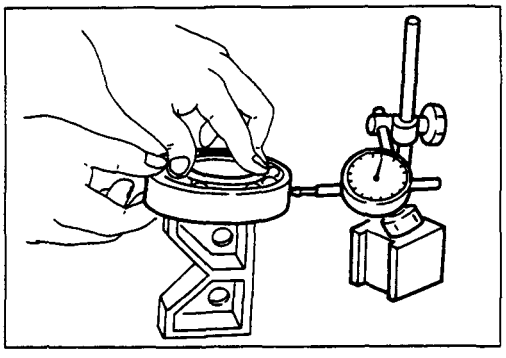

BALL BEARING PLAY

Use a dial indicator to measure the ball bearing play.

Ball Bearing Play mm(in)

Limit
0.2 (0.0079)

FRONT COVER OIL SEAL

Oil Seal Replacement

Oil Seal Removal

Use a screwdriver to pry the oil seal from the front cover.

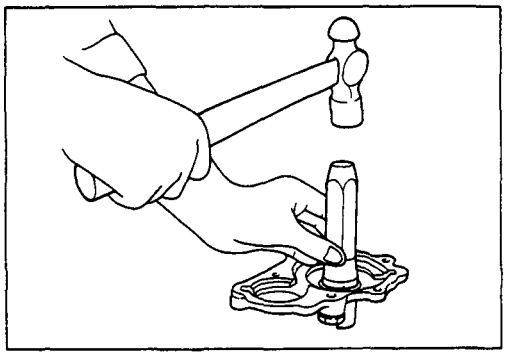

Oil Seal Installation

1. Use the oil seal installer to install the oil seal to the front cover.

   Oil Seal Installer : 5-8840-0026-0 (J-26540)
2. Apply gear oil to the oil seal lip.

REAR COVER OIL SEAL

Oil Seal Replacement

Oil Seal Removal

Use a screwdriver to pry the oil seal from the rear cover.

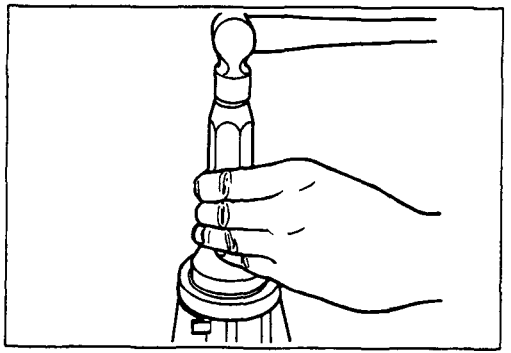

Oil Seal Installation

1. Use the oil seal installer to install the oil seal to the rear cover.

   Oil Seal Installer : 5-8522-0050 (J-29769)

2. Apply engine oil to the oil seal lip.

REASSEMBLY

MINOR COMPONENTS

TOP GEAR SHAFT, MAIN GEAR SHAFT, AND COUNTER GEAR

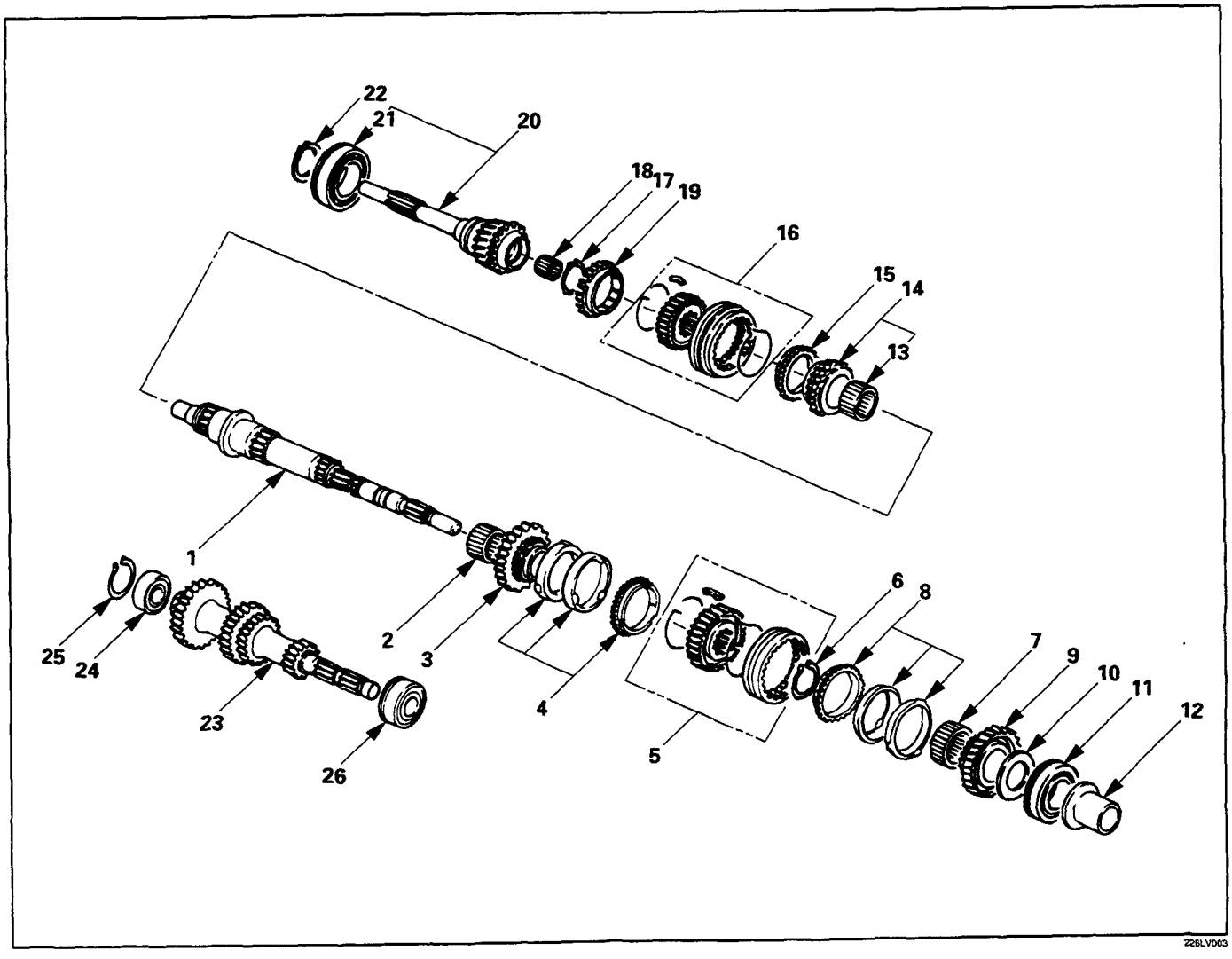

Reassembly Steps

1. Mainshaft
▲ 2. Needle bearing
▲ 3. 2nd gear
4. 2nd block ring (set)
▲ 5. 1st-2nd synchronizer assembly
▲ 6. Clutch hub snap ring
▲ 7. Needle bearing
8. 1st block ring (set)
▲ 9. 1st gear
▲ 10. 1st gear thrust bearing and plate
▲ 11. Mainshaft ball bearing
▲ 12. Needle bearing collar
▲ 13. Needle bearing
▲ 14. 3rd gear
15. 3rd block ring
▲ 16. 3rd-4th synchronizer assembly
▲ 17. Mainshaft snap ring
18. Needle bearing
19. Top block ring
20. Top gear shaft
▲ 21. Top gear ball bearing
▲ 22. Top gear shaft snap ring
23. Counter gear
▲ 24. Counter gear front bearing
25. Snap ring
26. Counter gear center bearing

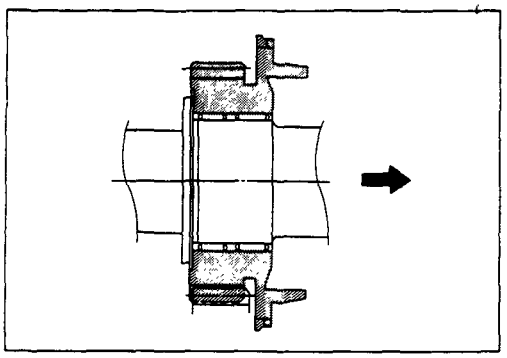

Important Operations

2. Needle Bearing

3. 2nd Gear

1) Apply engine oil to the needle bearing and the 2nd gear thrust surfaces.
2) Install the needle bearing and the 2nd gear to the mainshaft.

   The 2nd gear dog teeth must be facing the transmission rear side.

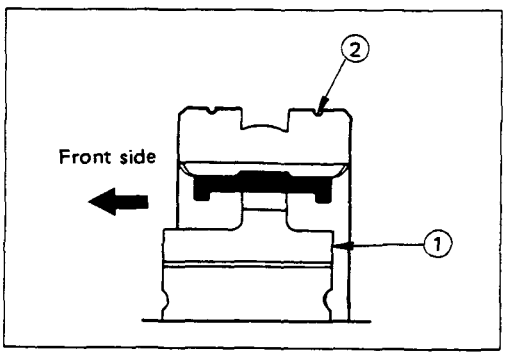

5. 1st-2nd Synchronizer Assembly

1) Turn the clutch hub face ① shallow toward the sleeve small groove ② on the outer circumference.

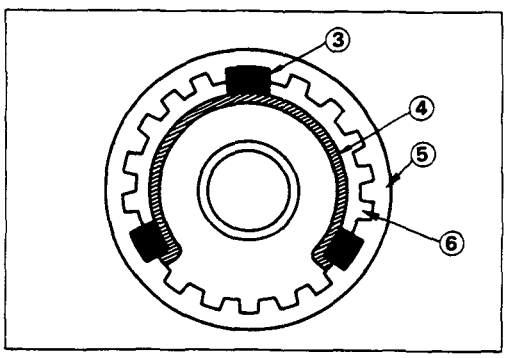

2) Check that the inserts ③ fit snugly into the block ring insert grooves.
3) Check that the insert springs ④ are fitted to the inserts as shown in the illustration.
4) Check that the clutch hub ⑤ and the sleeve ⑥ slide smoothly.
5) Install the synchronizer assembly to the mainshaft.

   The clutch hub face (with the heavy boss) must be facing the 2nd gear side.

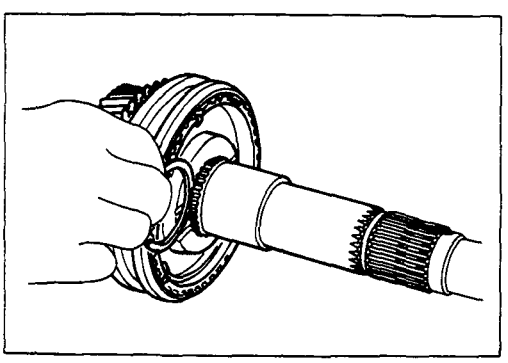

6. Clutch Hub Snap Ring

1) Select the snap ring which will provide the minimum clearance between the 1st-2nd clutch hub and the snap ring.

   There are three snap ring sizes available.

   The snap rings are color-coded to indicate their thickness.

Clutch Hub and Snap Ring Clearance	mm(in)
Standard	
0 — 0.1 (0 — 0.0039)	

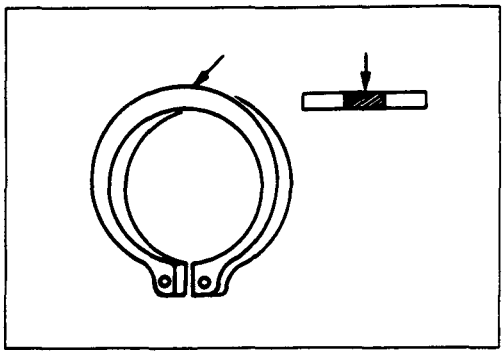

Snap Ring Availability mm(in)

Thickness	Color-Coding
1.80 (0.071)	White
1.85 (0.073)	Yellow
1.90 (0.075)	Blue

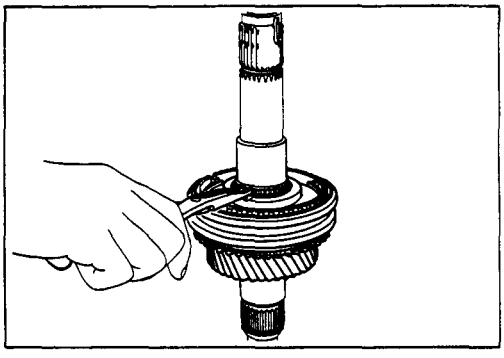

2) Use a pair of snap ring pliers to install the snap ring to the mainshaft.

Snap Ring Pliers

The snap ring must be fully inserted into the mainshaft snap ring groove.

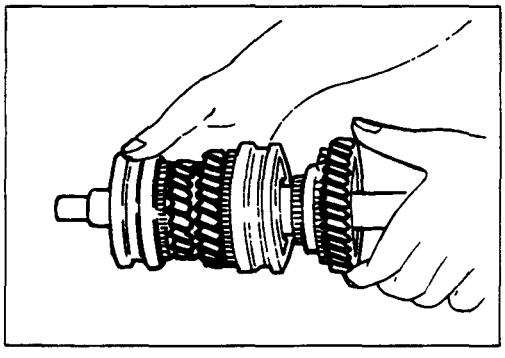

7. Needle Bearing

9. 1st Gear

1) Apply engine oil to the needle bearing and the 1st gear thrust surfaces.
2) Install the needle bearing and the 1st gear to the mainshaft.

The 1st gear dog teeth must be facing the transmission front side.

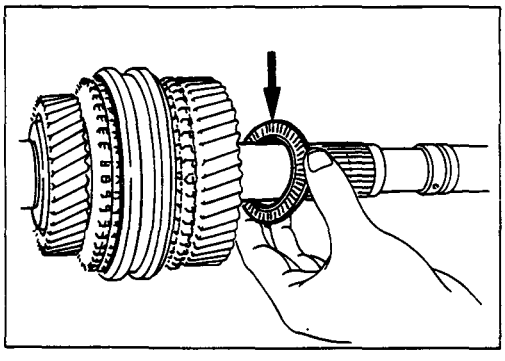

10. 1st Gear Thrust Bearing and Plate

Install the thrust bearing and the race to the main shaft.

The thrust bearing side must be facing the transmission front side.

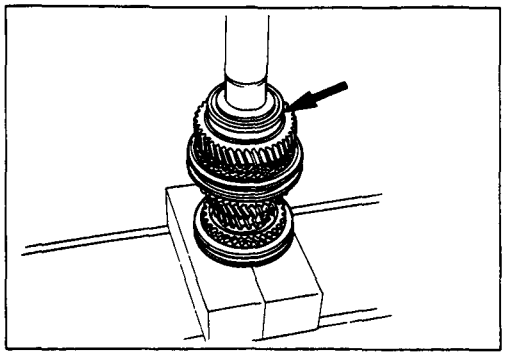

11. Mainshaft Ball Bearing

12. Needle Bearing Collar

1) Apply engine oil to the ball bearing and the mainshaft.
2) Install the ball bearing and collar to the mainshaft. The ball bearing snap ring groove must be facing the transmission rear side.
3) Use a bench press to slowly force the collar into place.

Installer : 5-8840-2195-0 (J-6133-01)

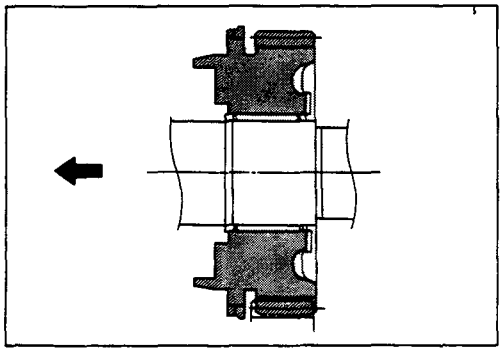

13. Needle Bearing

14. 3rd Gear

1) Apply engine oil to the needle bearing and the 3rd gear thrust surfaces.
2) Install the needle bearing and the 3rd gear to the mainshaft.

   The 3rd gear dog teeth must be facing the transmission front side.

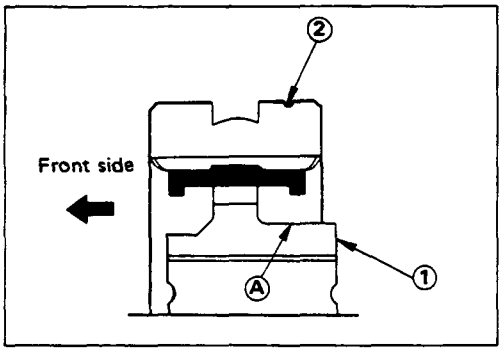

16. 3rd-4th Synchronizer Assembly

1) Turn the clutch hub face ① with the heavy boss Ⓐ toward the sleeve small groove ② on the outer circumference.

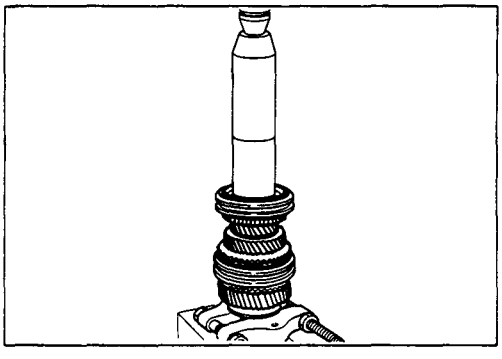

2) Check that the inserts fit snugly into the block ring insert grooves.
3) Check that the insert springs are fitted to the inserts as shown in the illustration.
4) Check that the clutch hub and the sleeve slide smoothly.
5) Install the synchronizer assembly to the main shaft.

   The clutch hub face (with the heavy boss) must be facing the 3rd gear side.

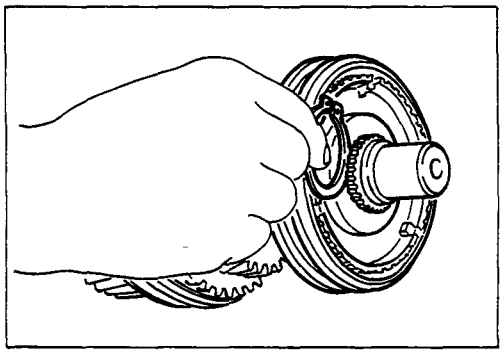

17. Mainshaft Snap Ring

1) Select the snap ring which will provide the minimum clearance between the 3rd-4th clutch hub and the snap ring.

   There are three snap ring sizes available.

   The snap rings are color-coded to indicate their thickness.

Clutch Hub and Snap Ring Clearance — mm(in)

Standard
0 — 0.1 (0 — 0.0039)

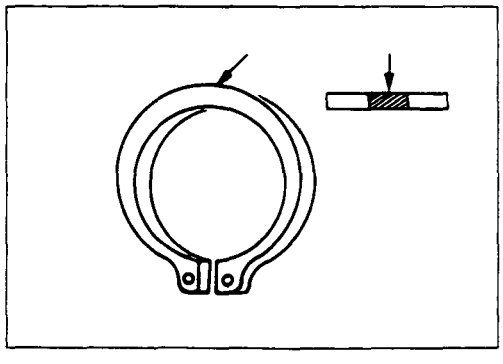

Snap Ring Availability — mm(in)

Thickness mm(in)	Color-Coding
1.80 (0.071)	White
1.85 (0.073)	Yellow
1.90 (0.075)	Blue

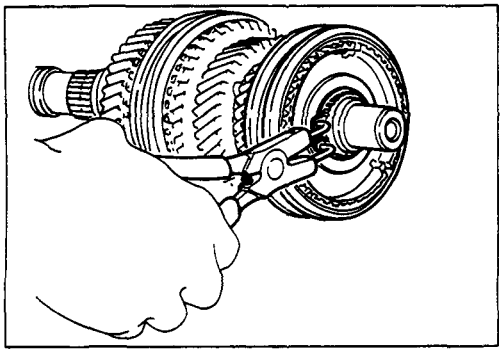

2) Use a pair of snap ring pliers to install the snap ring to the mainshaft.

   The snap ring must be fully inserted into the mainshaft snap ring groove.

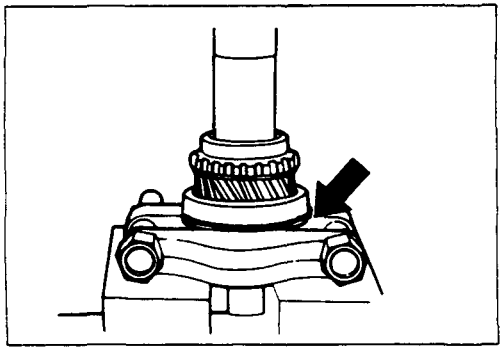

21. Top Gear Ball Bearing

22. 4th Gear Shaft Snap Ring

1) Use a bench press to install the top gear shaft ball bearing to the mainshaft.

   The snap ring groove must be facing the transmission front side.

2) Use a pair of snap ring pliers to install the snap ring to the bearing.

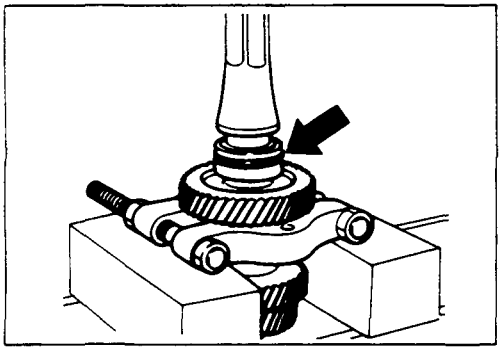

24. Counter Gear Front Bearing

Use a bench press to install the counter gear front bearing to the mainshaft.

The snap ring groove must be facing the transmission front side.

Bearing Installer: 5-8840-2194-0 (J-35283)

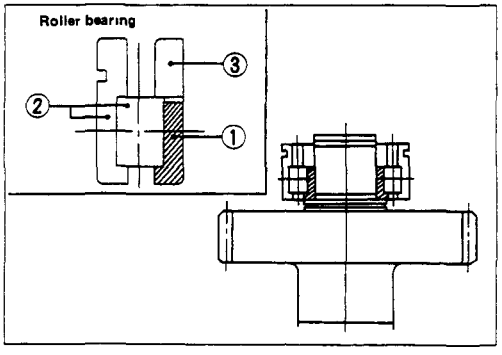

1) Apply engine oil to the bearing and install the inner race ① and outer race with roller ② in the proper direction to the mainshaft.
2) Then install the inner race ③ with taper side turned to outer race ②.

Note:
The inner race ③ should be installed with stamp on die face side turned to the front side of transmission.

REVERSE GEAR AND 5TH GEAR

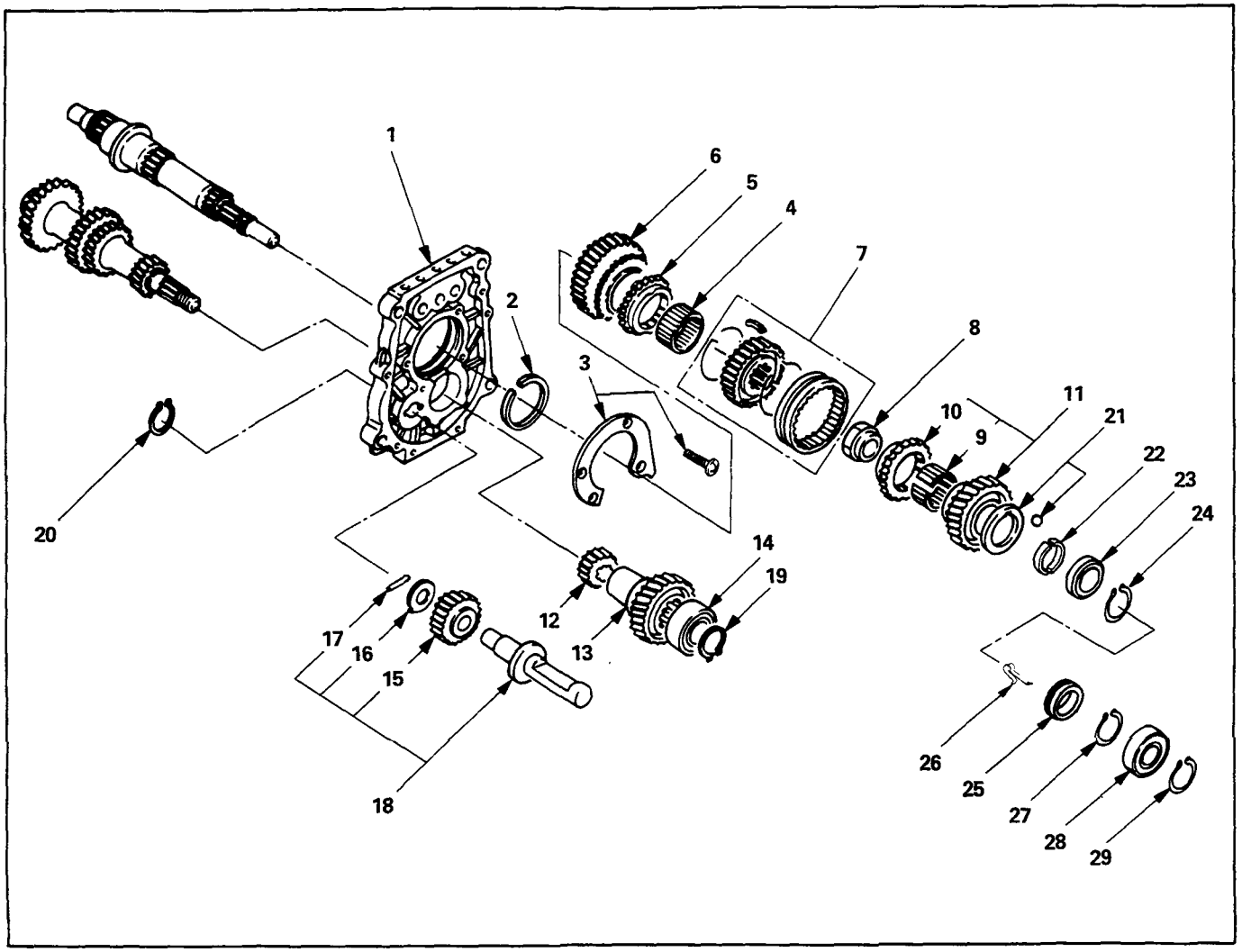

Reassembly Steps

- ▲ 1. Intermediate plate
- 2. Bearing snap ring
- ▲ 3. Bearing plate and screw
- 4. Needle bearing
- 5. Reverse block ring
- 6. Reverse gear
- ▲ 7. Rev.-5th synchronizer assembly
- ▲ 8. Mainshaft nut
- 9. Needle bearing
- 10. 5th block ring
- 11. 5th gear
- ▲ 12. Counter reverse gear
- 13. Counter 5th gear
- 14. Ball bearing
- 15. Reverse idler gear
- 16. Thrust washer
- 17. Idler shaft pin
- 18. Reverse idler shaft
- ▲ 19. Bearing snap ring
- ▲ 20. Reverse gear snap ring
- ▲ 21. Thrust washer and lock ball
- 22. Thrust plate
- 23. Retaining ring
- 24. Retainer snap ring
- 25. Speedometer drive gear
- 26. Clip
- 27. Bearing snap ring
- ▲ 28. Ball bearing
- 29. Bearing snap ring

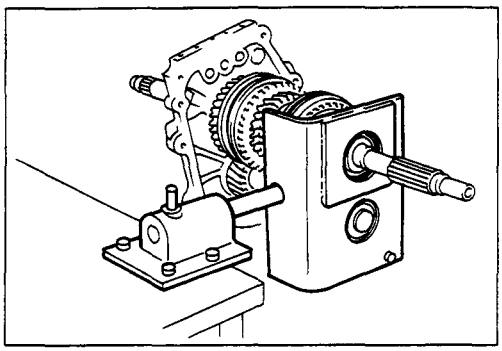

Important Operations

1. Intermediate Plate

1) Mesh the counter gear with the mainshaft assembly.
2) Install the holding fixture to the mainshaft and the counter gear.

   Holding Fixture: 5-8840-2160-0 (J-37224)
   Holding Base: 5-8840-0003-0 (J-3289-20)
3) Place the holding fixture (with the mainshaft and the countershaft) in a vise.
4) Install the intermediate plate.

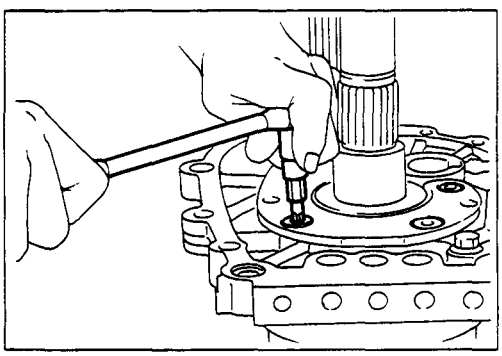

3. Bearing Plate and Screw

1) Apply recommended thread locking agents or its equivalent to each of the bearing plate screw threads.
2) Tighten the screws to the specified torque.

   Torx Bit Wrench: 5-8840-0047-0 (J-37225 : T45)

Bearing Plate Screw Torque	kg·m (lb·ft/N·m)
	1.45 ± 0.35 (10.5 ± 2.5/14.2 ± 3.4)

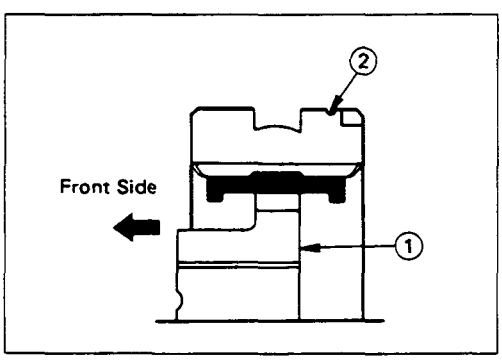

7. Rev-5th Synchronizer Assembly

1) Turn the clutch hub face ① toward the sleeve small groove ② on the outer circumference.
2) Install the synchronizer assembly to the mainshaft.

   The clutch hub face (with the heavy boss) must be facing the reverse gear side.

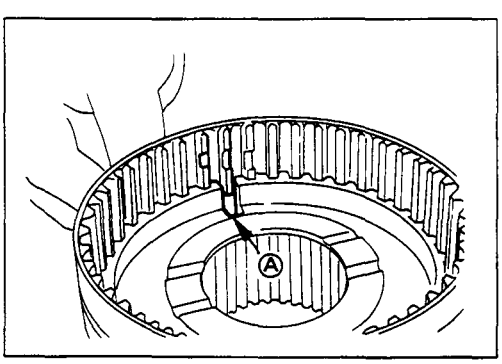

Note:
The clutch hub groove Ⓐ must be aligned with the key groove of sleeve.

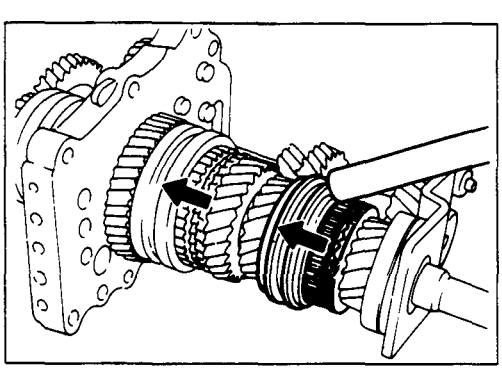

8. Mainshaft Nut

1) Mesh the 1st-2nd synchronizer with both the 1st and 3rd gears (double engagement).

   This will prevent the mainshaft from turning.

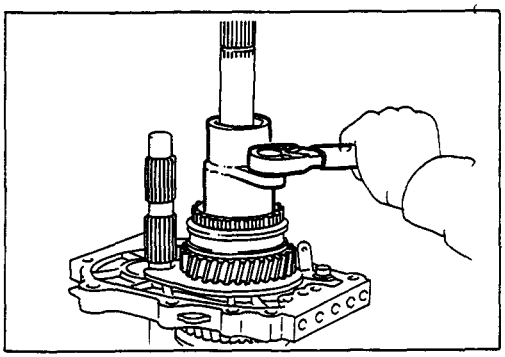

2) Install the mainshaft hub nut.
3) Use the mainshaft nut wrench to tighten the mainshaft nut to the specified torque.

   Wrench: 5-8840-2156-0 (J-37219)

Mainshaft Nut Torque	kg·m(lb·ft/N·m)
13 ± 1 (94.0 ± 7.2/127.4 ± 9.8)	

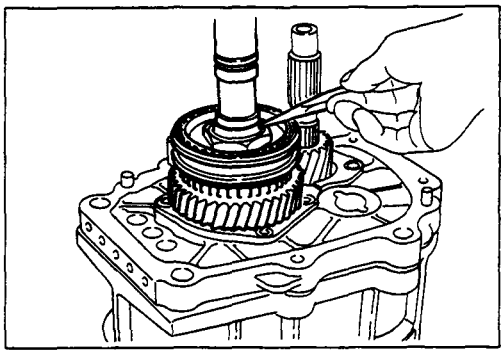

4) Use a punch to caulk the mainshaft nut.

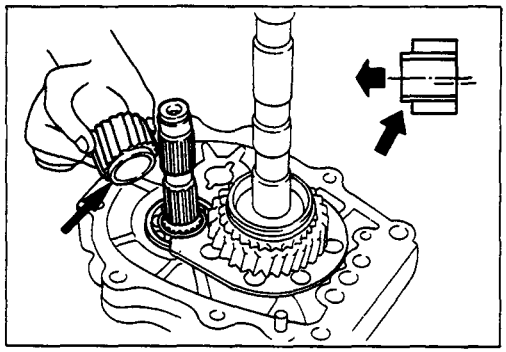

12. Counter Reverse Gear

1) Apply engine oil to the counter reverse gear and the reverse gear.
2) Install the counter reverse gear to the counter gear.

   Note the projection at either side of the counter reverse gear.

   The larger projection must be facing the intermediate plate.

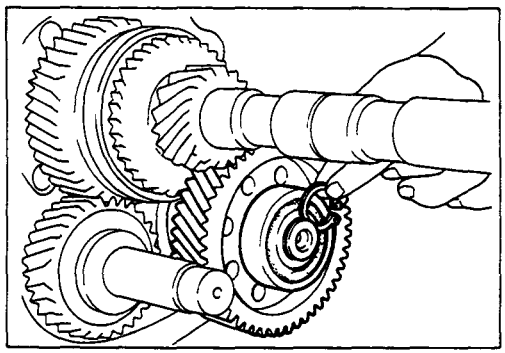

19. Bearing Snap Ring

1) Select the snap ring which will provide the minimum clearance between the ball bearing and the snap ring.

   There are six snap ring sizes available.

   The snap rings are color-coded to indicate their thickness.

Ball Bearing and Snap Ring Clearance	mm(in)
Standard	
0 — 0.15 (0 — 0.0059)	

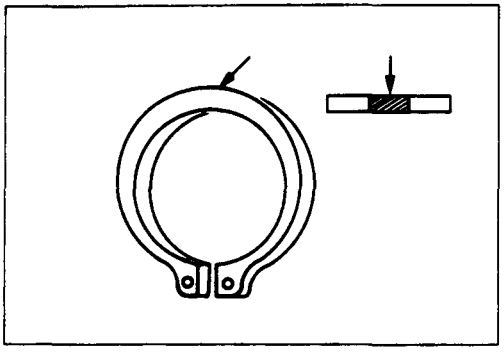

Snap Ring Availability mm(in)

Thickness mm(in)	Color-Coding
1.1 (0.043)	White
1.2 (0.047)	Yellow
1.3 (0.051)	Blue
1.4 (0.055)	Pink
1.5 (0.059)	Green
1.6 (0.063)	Brown

2) Use a pair of snap ring pliers to install the snap ring to the mainshaft.

   Snap Ring Pliers

   The snap ring must be fully inserted into the counter 5th gear snap ring groove.

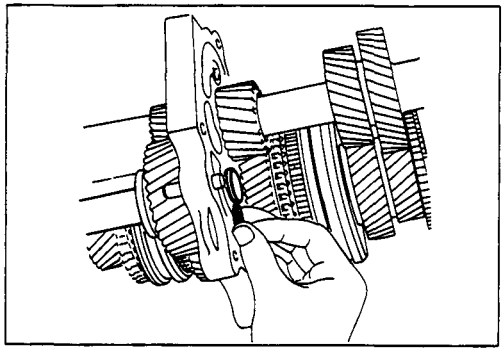

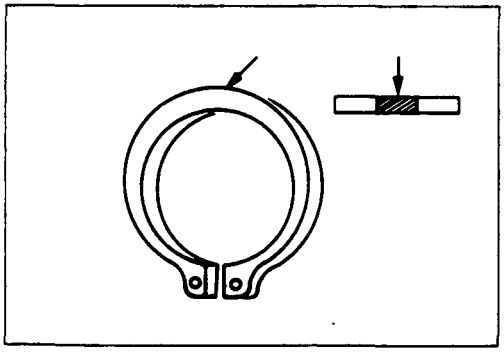

20. Reverse Gear Snap Ring

1) Select the snap ring which will provide the minimum clearance between the intermediate plate and the snap ring.
   There are three snap ring sizes available.
   The snap rings are color-coded to indicate their thickness.

Intermediate Plate and Snap Ring Clearance mm(in)

Standard
0 — 0.15 (0 — 0.0059)

Snap Ring Availability mm(in)

Thickness mm(in)	Color-Coding
1.2 (0.047)	White
1.3 (0.051)	Yellow
1.4 (0.055)	Blue

2) Use a pair of snap ring pliers to install the snap ring to the mainshaft.
   Snap Ring Pliers
   The snap ring must be fully inserted into the counter 5th gear snap ring groove.

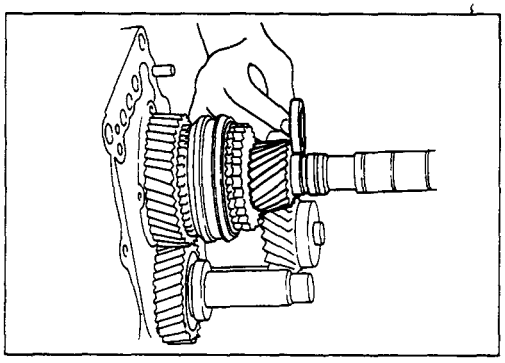

21. Thrust Washer and Lock Ball

1) Use a thickness gauge to measure the clearance between the 5th gear and the thrust washer.

5th Gear and Thrust Washer Clearance mm(in)

Standard
0.10 – 0.25 (0.0039 – 0.0098)

If required, replace the existing thrust washer with a new thrust washer to bring the clearance to specification.

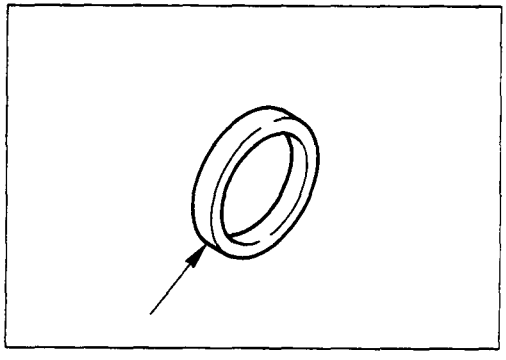

There are four thrust washer sizes available.
The snap rings are color-coded to indicate their thickness.

Thrust Washer Availability mm(in)

Thickness	Color-Coding
7.9 (0.311)	White
8.0 (0.315)	Yellow
8.1 (0.319)	Green
8.2 (0.323)	Blue

2) Apply grease to the thrust washer and the lock ball.
3) Install the thrust washer and the lock ball.

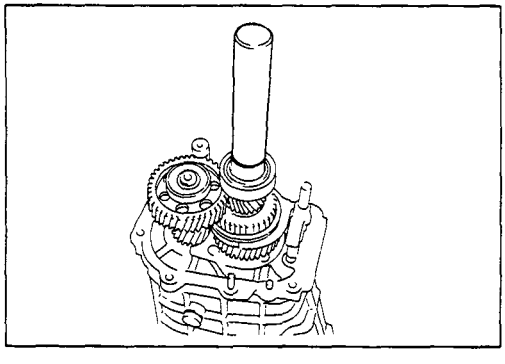

28. Ball Bearing

Use the installer to install the ball bearing to the mainshaft.

Installer: 5-8840-2159-0 (J-37223)

INTERMEDIATE PLATE AND GEAR ASSEMBLY, DETENT, SHIFT ARM ASSEMBLY, AND INTERLOCK PIN

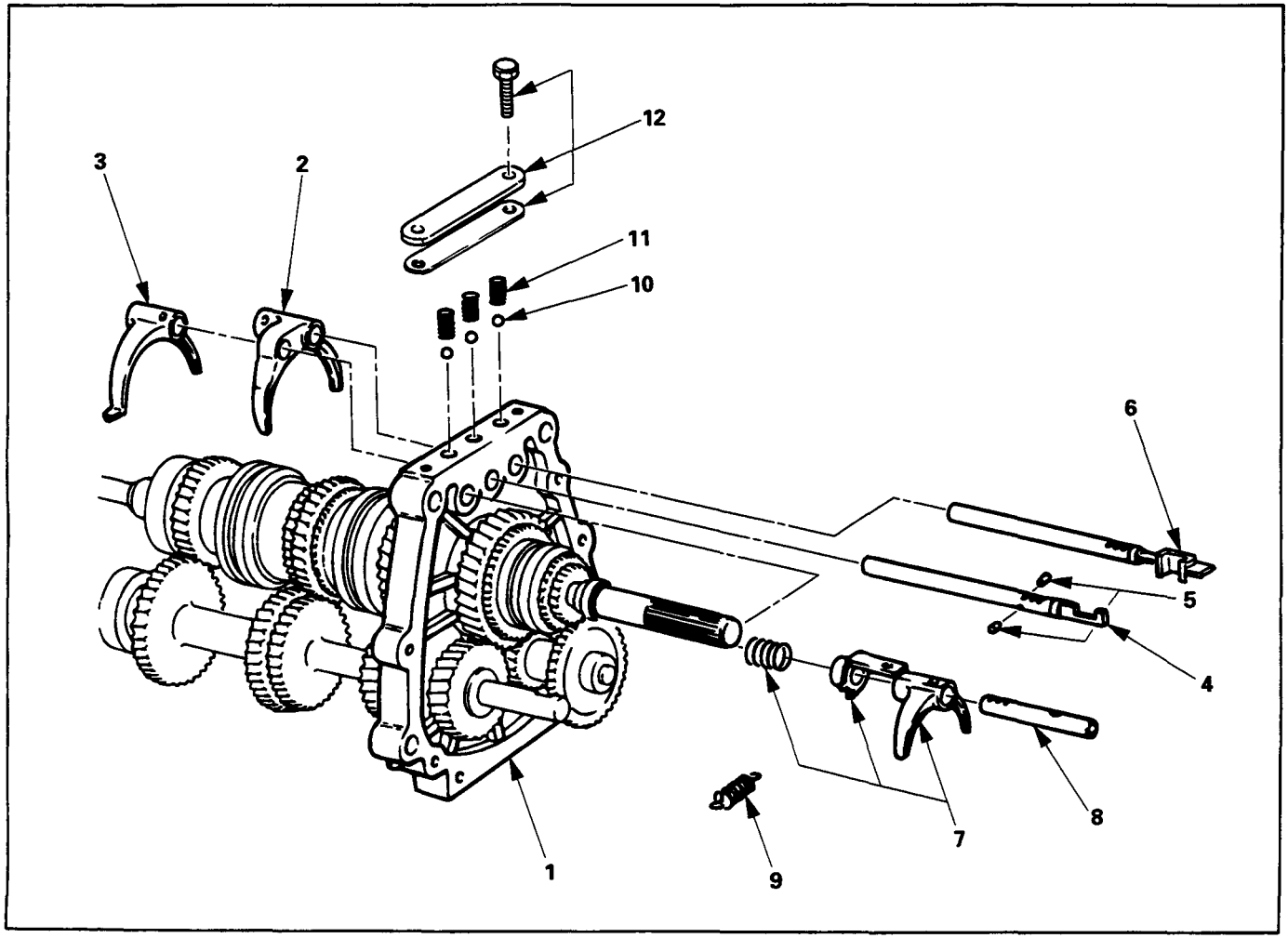

Reassembly Steps

1. Intermediate plate and gear assembly
2. 1st-2nd shift arm
3. 3rd-4th shift arm
4. ▲ 3rd-4th shift rod
5. ▲ Interlock pin
6. 1st-2nd shift rod
7. Rev-5th shift arm and reverse inhibitor
8. Rev-5th shift rod
9. Spring
10. Detent ball
11. Detent spring
12. ▲ Detent spring plate and gasket

Important Operations

4. 3rd-4th Shift Rod

5. Interlock Pin

1) Install the interlock pin to the shift rod.
2) Install the shift rod together with the interlock pin to the intermediate plate.

   Do not allow the interlock pin to fall from the shift rod.

12. Detent Spring Plate and Gasket

1) Install the new-detent plate and new gasket onto the transmission case into the correct direction.
2) Tighten the detent spring plate bolts to the specified torque.

Detent Spring Plate Bolt Torque	kg·m(lb·ft/N·m)
	1.5 (10.8/14.7)

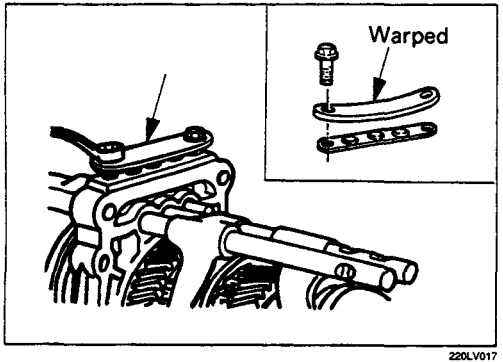

220LV017

MAJOR COMPONENTS

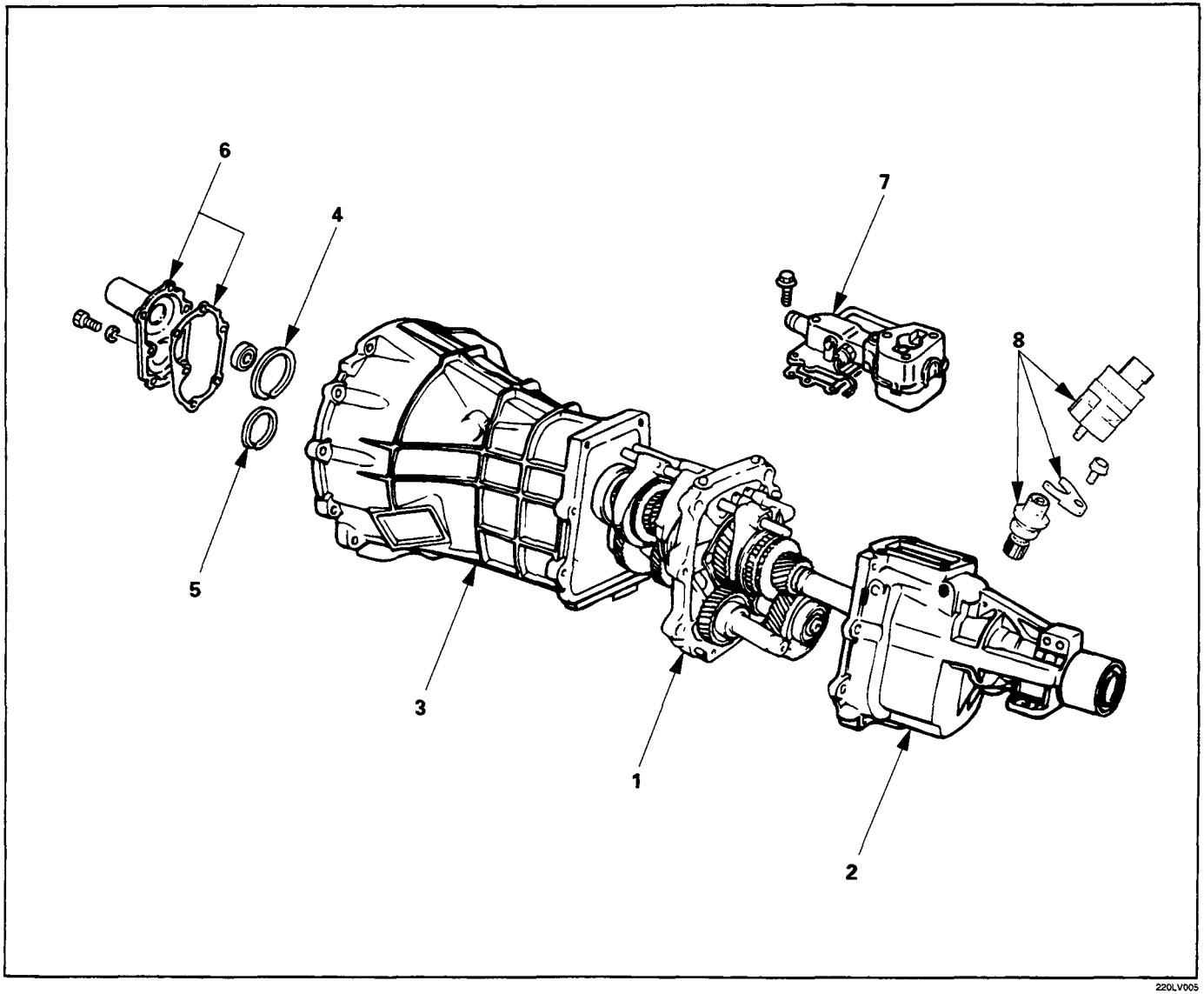

Reassembly Steps

- ▲ 1. Intermediate plate with gear assembly
- ▲ 2. Rear cover with oil seal
- ▲ 3. Transmission case
- ▲ 4. Front bearing snap ring
- ▲ 5. Counter front bearing snap ring
- ▲ 6. Front cover with oil seal
- ▲ 7. Gear control box assembly
- 8. Speedometer driven gear and speedometer sensor

Important Operations

1. Intermediate Plate with Gear Assembly

1) Apply a light coat of oil to the transmission case top gear shaft ball bearing fitting faces and the shift rods.

   This will facilitate smooth installation.

2) Install the intermediate plate assembly.

3) Pull out the top gear shaft until the ball bearing snap ring groove protrudes from the transmission case front cover fitting face.

   Avoid subjecting the mainshaft to sudden shock or stress.

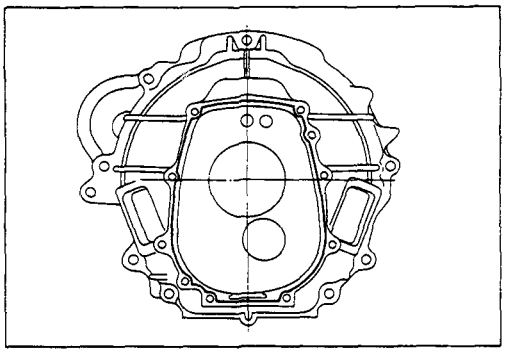

2. Rear Cover with Oil Seal

3. Transmission Case

1) Apply recommended liquid gasket or its equivalent to the transmission case and rear cover fitting surfaces.

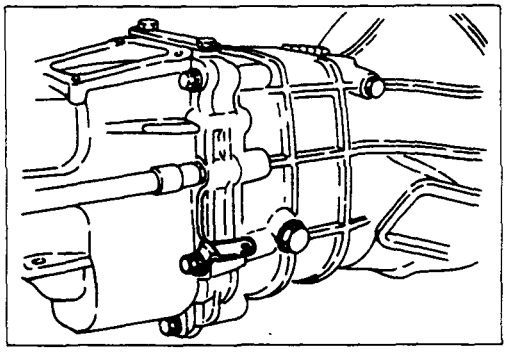

2) Install the rear cover and the transmission case to the intermediate plate.

3) Tighten the rear cover bolts to the specified torque.

Rear Cover Bolt Torque	kg·m (lb·ft/N·m)
	4.0 ± 0.8 (28.9 ± 1.4/39.2 ± 1.96)

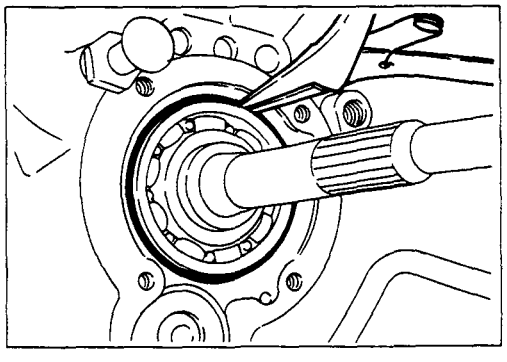

4. Front Bearing Snap Ring

5. Counter Front Bearing Snap Ring

Use a pair of snap ring pliers to install the snap rings to the mainshaft.

The snap rings must be fully inserted into the ball bearing snap ring groove.

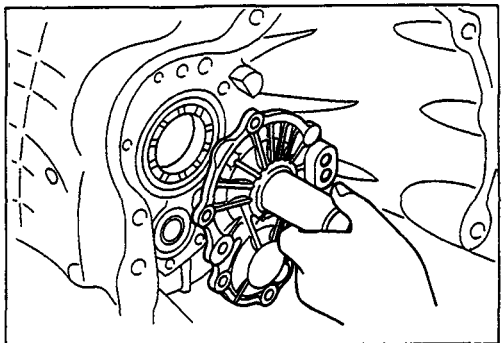

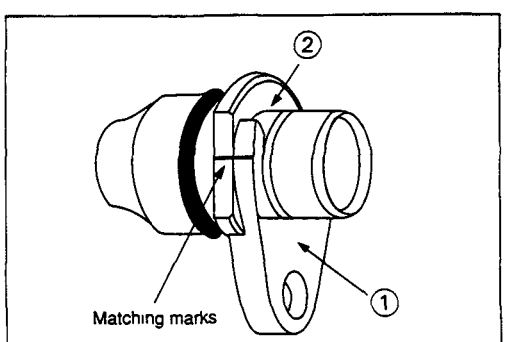

6. Front Cover with Oil Seal

1) Apply recommended liquid gasket or its equivalent to the through bolt threads.
2) Install the new gasket and the front cover to the transmission case

   Take care not to damage the oil seal.
3) Tighten the front cover bolts to the specified torque.

Front Cover Bolt Torque	kg·m (lb·ft/N·m)
1.9 ± 0.4 (13.7 ± 2.9/18.6 ± 3.9)	

7. Speedometer Driven Gear and Speedometer Sensor

1) Align the matching marks on plate ① and bush ②, then tighten the bolt.

Bolt Torque	kg·m (lb·ft/N·m)
1.5 (10.8/14.7)	

2) Install the speedometer sensor.

Speedometer Sensor Torque	kg·m (lb·ft/N·m)
2.8 (20/27)	

4 x 4 MODEL TRANSMISSION

MAIN DATA AND SPECIFICATIONS

			MUA 5C	MUA 5S
Transmission type			Fully synchronized 5-forward and reverse gears.	
Transfer case type			Constant mesh type Low-High and 2H-4H gears.	
Gear ratio :	Transmissior	1st	3.767	4.357
		2nd	2.248	2.502
		3rd	1.404	1.501
		4th	1.000	1.000
		5th	0.809	0.809
		Rev.	3.875	3.970
	Transfer	High	1.000	
		Low	2.051	
Oil capacity :	Transmission	lit (US gal.)	2.95 (0.78)	
:	Transfer	lit (US gal.)	1.45 (0.38)	

GENERAL DESCRIPTION

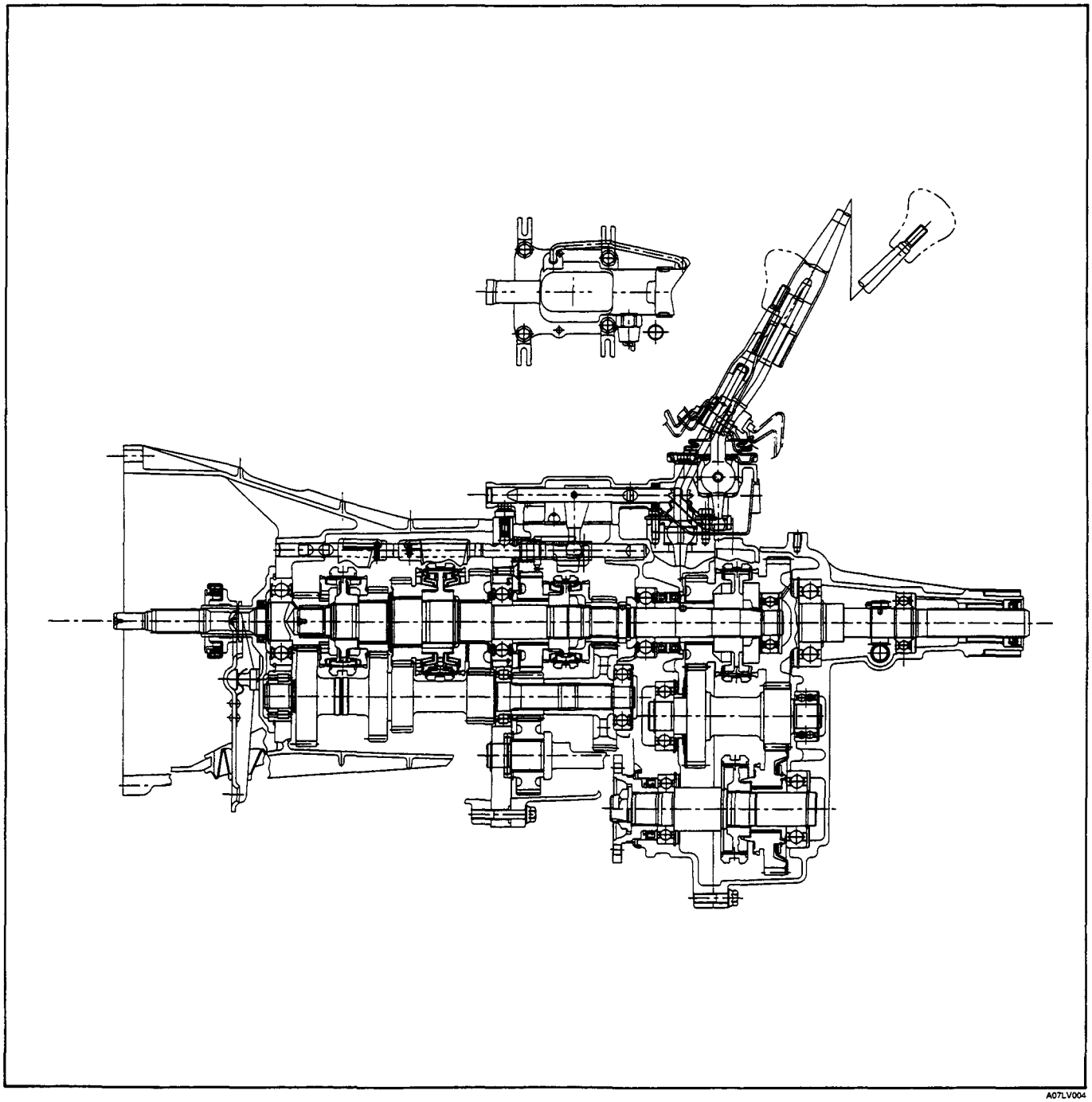

A07LV004

The transmission is designed for the quietest possible operation.

A longer center distance (77.5 mm (3.05 in)) provides increased durability.

Principle parts of the transmission are the integral clutch housing, the intermediate plate, the rear cover, and the gears.

The gear control box is built-in to the transfer case.

Transfer gear ratio is 1 : 2.051.

TORQUE SPECIFICATIONS

STANDARD BOLTS

The torque values given in the following table should be applied where a particular torque is not specified.

N·m (kg·m / lb·ft)

	Strength Class	4.8/4T	7T	8.8		9.8/9T
				Refined	Non-Refined	
	Bolt Identification	4	7	8	8	9
	Bolt Diameter× Pitch (mm)	No mark	—			
Standard Hex. Head Bolt	M6 × 1.0	6 (0.6 / 52 lb·in)	7 (0.7 / 61 lb·in)	8 (0.8 / 69 lb·in)		–
	M8 × 1.25	13 (1.3 / 113 lb·in)	17 (1.7 / 12)	20 (2.0 / 14)		24 (2.4 / 17)
	M10 × 1.25	27 (2.8 / 20)	37 (3.8 / 27)	42 (4.3 / 31)		50 (5.1 / 37)
	M12 × 1.25	61 (6.3 / 45)	76 (7.8 / 56)	87 (8.9 / 64)		95 (9.7 / 70)
	M14 × 1.5	96 (9.8 / 71)	116 (11.8 / 85)	133 (13.6 / 98)		142 (14.5 / 105)
	M16 × 1.5	130 (13.3 / 96)	170 (17.3 / 125)	193 (19.7 / 143)		200 (20.4 / 148)
	M18 × 1.5	188 (19.2 / 139)	244 (24.9 / 180)	278 (28.3 / 205)		287 (29.3 / 212)
	M20 × 1.5	258 (26.3 / 190)	337 (34.4 / 249)	385 (39.3 / 284)		396 (40.4 / 292)
	M22 × 1.5	332 (33.9 / 245)	453 (46.3 / 335)	517 (52.7 / 381)		530 (54.1 / 391)
	M24 × 2.0	449 (45.8 / 331)	570 (58.2 / 421)	651 (66.3 / 480)		692 (70.6 / 511)
	* M10 × 1.5	26 (2.7 / 20)	36 (3.7 / 27)	41 (4.2 / 30)		48 (4.9 / 35)
	* M12 × 1.75	57 (5.8 / 42)	71 (7.2 / 52)	80 (8.2 / 59)		89 (9.1 / 66)
	* M14 × 2.0	89 (9.1 / 66)	110 (11.2 / 81)	125 (12.7 / 92)		133 (13.6 / 98)
	* M16 × 2.0	124 (12.7 / 92)	162 (16.5 / 119)	185 (18.9 / 137)		191 (19.5 / 141)
Flange Bolt	M6 × 1.0	7 (0.7 / 61 lb·in)	8 (0.8 / 69 lb·in)	9 (0.9 / 78 lb·in)		–
	M8 × 1.25	15 (1.5 / 11)	19 (1.9 / 14)	22 (2.2 / 16)		26 (2.7 / 20)
	M10 × 1.25	31 (3.2 / 23)	41 (4.2 / 30)	47 (4.8 / 35)		56 (5.7 / 41)
	M12 × 1.25	69 (7.0 / 51)	85 (8.7 / 63)	97 (9.9 / 72)		106 (10.8 / 78)
	M14 × 1.5	104 (10.6 / 77)	126 (12.8 / 93)	144 (14.6 / 106)		154 (15.7 / 114)
	M16 × 1.5	145 (14.8 / 127)	188 (19.2 / 139)	214 (21.8 / 158)		221 (22.5 / 163)
	M18 × 1.5	–	–	–		–
	M20 × 1.5	–	–	–		–
	M22 × 1.5	–	–	–		–
	M24 × 2.0	–	–	–		–
	* M10 × 1.5	30 (3.1 / 22)	40 (4.1 / 30)	46 (4.7 / 34)		54 (5.5 / 40)
	* M12 × 1.75	64 (6.5 / 47)	78 (8.0 / 58)	89 (9.1 / 66)		99 (10.1 / 73)
	* M14 × 2.0	97 (9.9 / 72)	119 (12.1 / 88)	135 (13.8 / 99.7)		144 (14.7 / 107)
	* M16 × 2.0	137 (14.0 / 101)	178 (18.2 / 132)	203 (20.7 / 150)		210 (21.5 / 155)

The asterisk * indicates that the bolts are used for female-threaded parts that are made of soft materials such as casting, etc.

FLARE NUTS

N·m (kg·m / lb·ft)

Pipe diameter mm (in)	Torque	Pipe diameter mm (in)	Torque
4.76 (0.187)	16 (1.6 / 12)	10.00 (0.394)	54 (5.5 / 40)
6.35 (0.250)	26 (2.7 / 20)	12.00 (0.472)	88 (9.0 / 65)
8.00 (0.315)	44 (4.5 / 33)	15.00 (0.591)	106 (10.8 / 78)

SPECIAL PARTS FIXING NUTS AND BOLTS

kg·m(lb.ft/N·m)

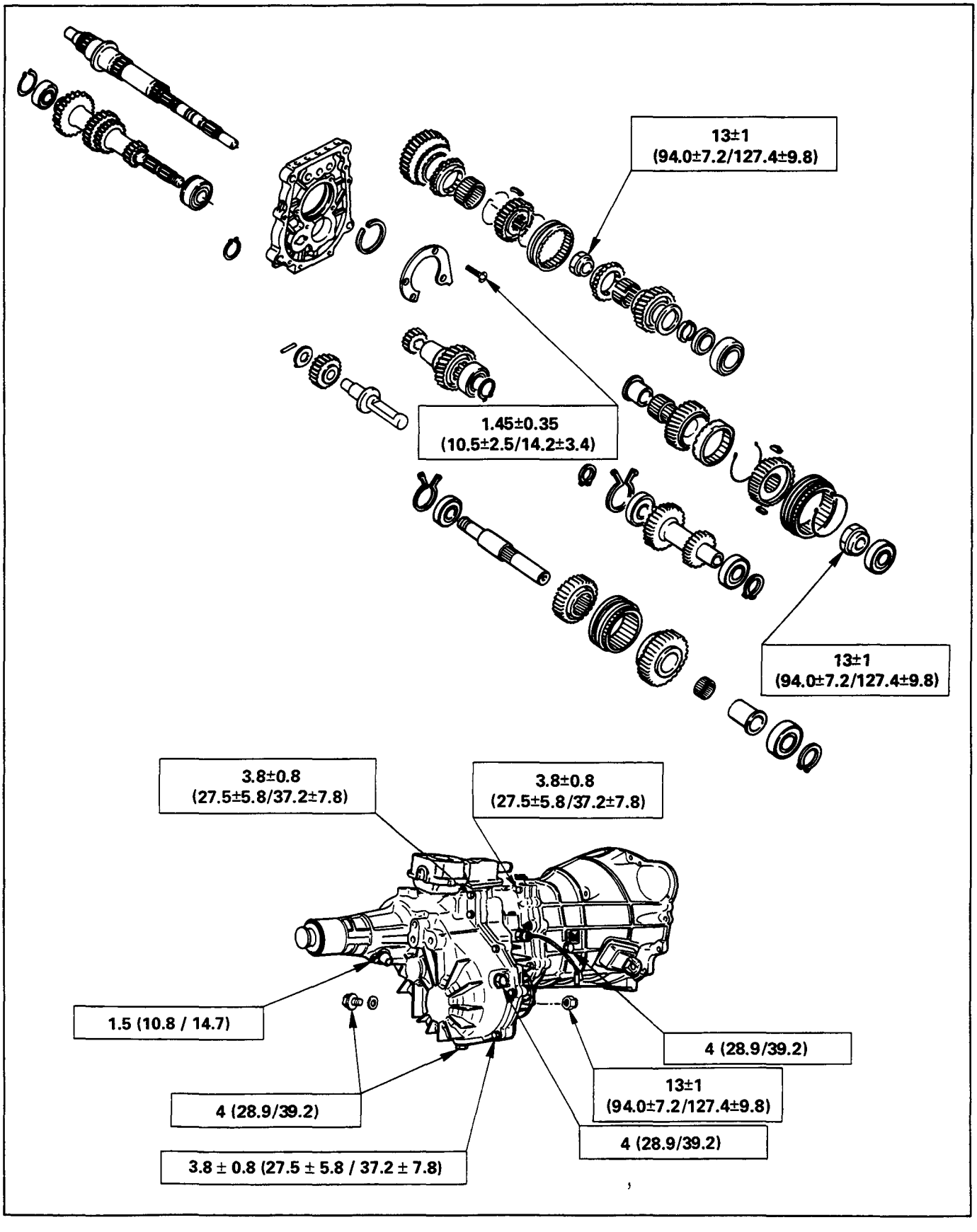

RECOMMENDED LIQUID GASKET

Type	Brand Name	Manufacturer	Remarks
RTV* Silicon Base	ThreeBond 1207B ThreeBond 1207C	Three Bond Three Bond	For Engine Repairs
	ThreeBond 1215 ThreeBond 1281	Three Bond Three Bond	For Axle Case and Transmission Repairs
Water Base	ThreeBond 1141E	Three Bond	For Engine Repairs
Solvent	ThreeBond 1104 BelcoBond 4 BelcoBond 401 BelcoBond 402	Three Bond Isuzu Isuzu Isuzu	For Engine Repairs
Anerobic	LOCTITE 515 LOCTITE 518	Loctite Loctite	All

* RTV : Room Temperature Vulcanizer

Note:

1. **It is very important that the liquid gaskets listed above or their exact equivalent be used on the vehicle.**
2. **Be careful to use the specified amount of liquid gasket.**
   Follow the manufacturer's instructions at all times.
3. **Be absolutely sure to remove all lubricants and moisture from the connecting surfaces before applying the liquid gasket.**
   The connecting surfaces must be perfectly dry.
4. **LOCTITE 515 and LOCTITE 518 harden upon contact with a metal surface.**
   Do not apply LOCTITE 515 or LOCTITE 518 between two metal surfaces having a clearance of greater than 0.25 mm (0.01 in). Poor adhesion will result.

REMOVAL AND INSTALLATION

Read this Section carefully before performing any removal and installation procedure. This Section gives you important points as well as the order of operation. Be sure that you understand everything in this Section before you begin.

Important Operations — Removal

Battery Cable

Disconnect the negative (–) cable from the battery terminal.

Engine Hood

Apply setting marks to the engine hood and the engine hood hinges before removing the engine hood.

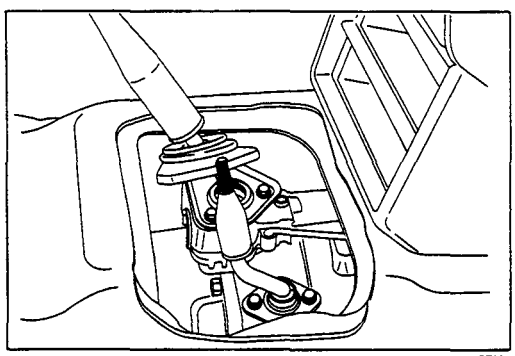

Gear Shift Lever and Transfer Change Lever

1. Place the gear shift lever in the neutral position.
2. Place the transfer change lever in the "H" position.
3 Remove the gear shift lever knob and transfer change lever knob.
4. Remove the center console assembly and front console assembly.
5. Remove the grommet and dust cover.
6. Remove the gear shift lever cover bolt.
7. Remove the gear shift lever.
8. Remove the transfer change lever retainer bolts.
9. Remove the transfer change lever and O-ring.

Note:
Cover the shift lever and change lever holes to prevent the entry of foreign material into the transmission.

Lifting the Vehicle

1. Jack up the vehicle.
2. Place chassis stands at the front and the rear of the vehicle.

Transfer Case Protector

Remove the transfer case protector from the transmission mounting member and the side member.

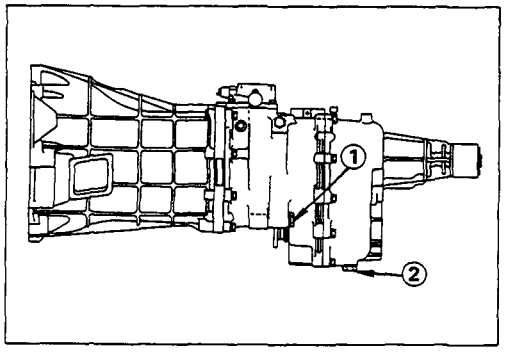

Transmission and Transfer Case Oil Draining

1. Remove the transmission oil drain plug ①.
2. Remove the transfer case oil drain plug ②.
3. Replace the drain plug(s) after draining the oil.

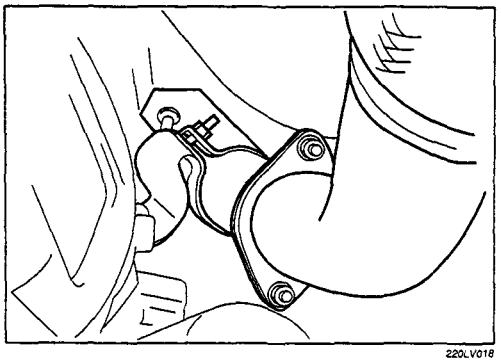

Exhaust Pipe

1. Remove the exhaust pipe bracket from the transmission case.
2. Remove the front exhaust pipe and 2nd-3rd exhaust pipe.

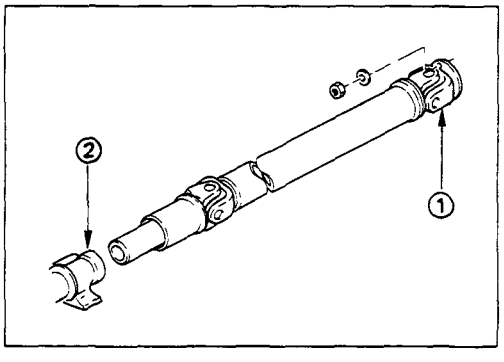

Rear Propeller Shaft (Single Shaft Type)

1. Remove the propeller shaft flange yoke at the drive pinion side ①.
2. Remove the propeller shaft from the transmission main shaft spline ②.

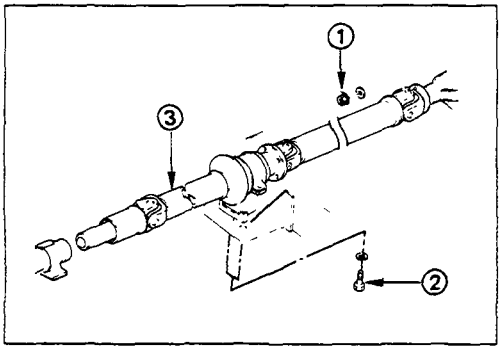

Rear Propeller Shaft (Dual Shaft Type)

1. Apply setting marks to the 2nd propeller shaft flange yoke.
   This will prevent mispositioning during the installation procedure.
2. Remove the 2nd propeller shaft flange yoke bolts at the drive pinion side ①.
3. Remove the center bearing retainer bolts ②.
4. Remove the 1st propeller shaft ③ with the center bearing and the 2nd propeller shaft.
   Pull the 1st propeller shaft toward the rear of the

the entry of foreign material into the transmission.

Lifting the Vehicle

1. Jack up the vehicle.
2. Place chassis stands at the front and the rear of the vehicle.

Transfer Case Protector

Remove the transfer case protector from the transmission mounting member and the side member.

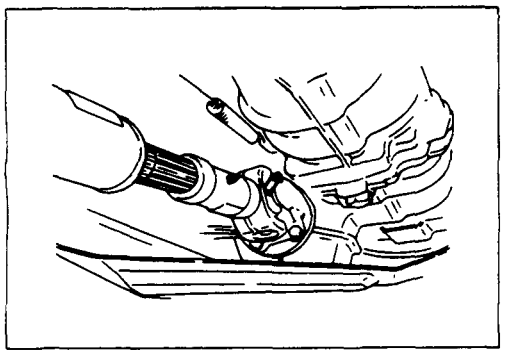

Front Propeller Shaft

Remove the splined yoke flange bolt at the transfer case side.

Do not allow the splined yoke to fall away from the front propeller shaft.

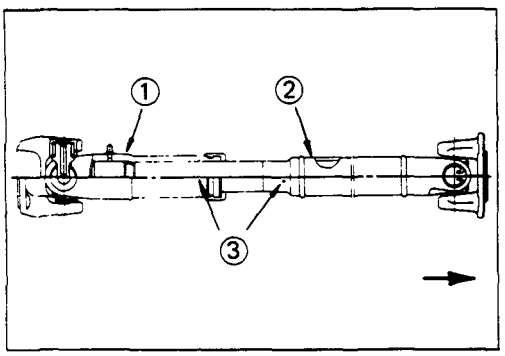

If the splined yoke should fall away from the front propeller shaft, align the setting marks ③ on the splined yoke ① and the propeller shaft ② to reassemble the two parts.

The setting marks are punched circles approximately ③ mm (0.12 in) in diameter.

Harness Connector

Disconnect the 4WD switch connectors, back up light switch connector and the speedometer sensor connector.

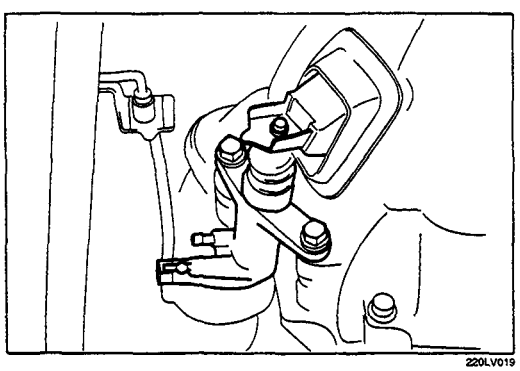

Slave Cylinder

Remove the slave cylinder from the transmission case.

Engine Lifting Hanger

1. Attach the engine lifting hanger to the front portion of the engine.
2. Attach the lifting wire to both ends of the engine lifting hanger.

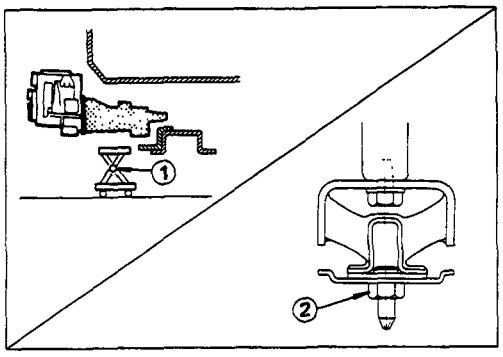

Engine Rear Mounting and Mounting Member

1. Support the transmission with a transmission jack ①.
2. Remove the engine rear mounting nuts ②.
3. Remove the engine rear mounting bolts.
4. Loosen the mounting member bolts.
5. Remove the mounting member from the sidemembers.
6. Remove the engine rear mounting.

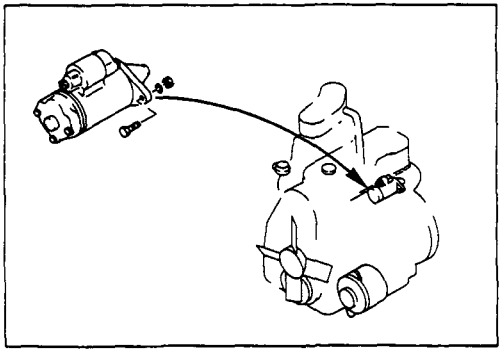

Starter Motor

Remove the starter motor from the engine rear plate.

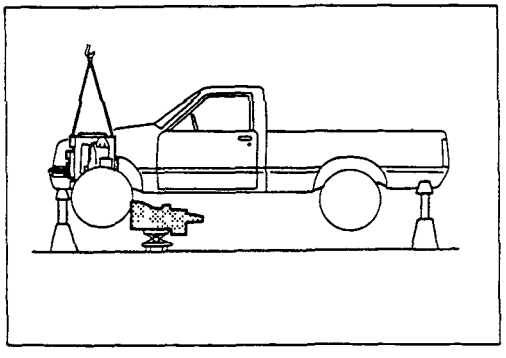

Transmission with Transfer

1. Remove the transmission nuts and bolts from the engine rear plate.
2. Carefully pull the transmission with the transmission jack toward the rear of the vehicle.
3. Operate the transmission jack to slowly lower the transmission.

Important Operations — Installation

Follow the removal procedure in the reverse order to perform the installation procedure. Pay careful attention to the important points during the installation procedure.

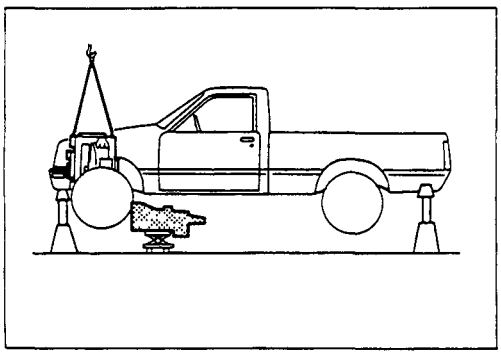

Transmission with Transfer

1. Apply a thin coat of molybdenum disulfide grease to the top gear shaft spline.
2. Place the transmission on a transmission jack.
3. Carefully move the transmission jack and transmission into position behind the engine.

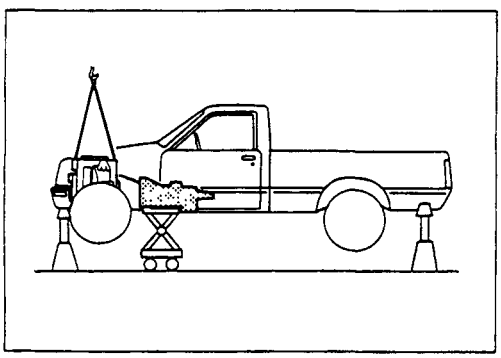

4. Slowly raise the transmission jack until the front of the transmission is aligned with the rear of the engine.

   The slope of the engine and the transmission must be the same.
5. Align the top gear shaft spline with the clutch driven plate spline.
6. Install the transmission to the engine.

   Tighten the transmission nuts and bolts to the specified torque.

Transmission Nut and Bolt Torque	kg·m(lb·ft/N·m)
M10: 4.1 ± 1.0 (30 ± 7.2/40 ± 10)	
M12: 8.0 ± 1.6 (58 ± 12/78 ± 16)	

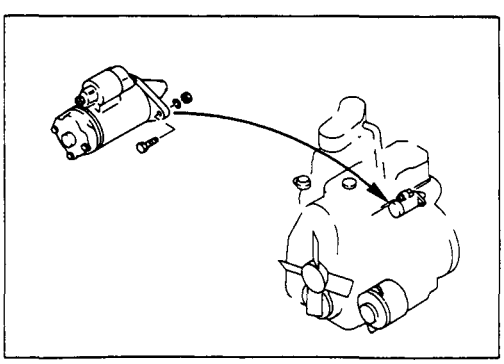

Starter Motor

1. Install the starter motor to the engine rear plate.

Starter Motor Bolt Torque	kg·m(lb·ft/N·m)
8.0 ± 1.6 (58 ± 12/78 ± 16)	

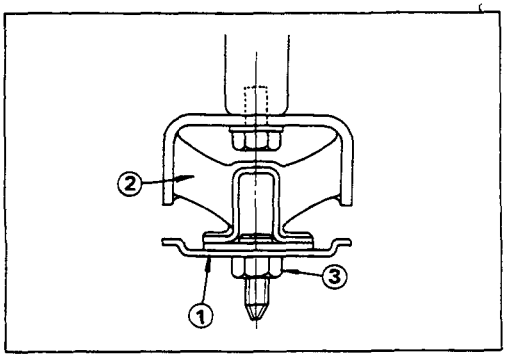

Engine Rear Mounting and Mounting Member

1. Install the engine rear mounting to the transmission.

Rear Mounting Bolt Torque	kg·m(lb·ft/N·m)
4.2 ± 0.5 (30 ± 3.6/41 ± 4.9)	

2. Install the mounting member ① to the mounting rubber ②.

Mounting Rubber Nut Torque	kg·m(lb·ft/N·m)
4.2 ± 0.5 (30 ± 3.6/41 ± 4.9)	

3. Install the mounting member to the sidemembers.

Mounting Member Bolt Torque	kg·m (lb·ft/N·m)
4.2 ± 0.5 (30 ± 3.6/41 ± 4.9)	

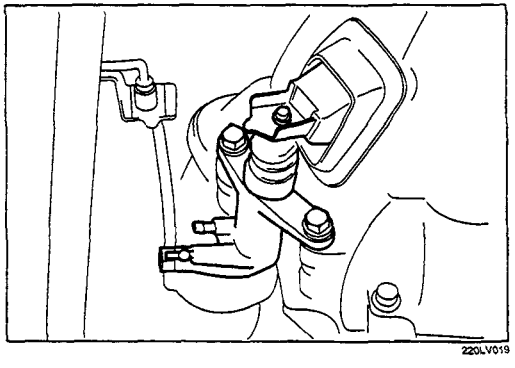

Slave Cylinder

Install the slave cylinder to the transmission case.

Slave Cylinder Bolt Torque	kg·m(lb·ft/N·m)
8.0 ± 1.6 (58 ± 12/78 ± 16)	

Harness Connector

Connect the 4WD switch connectors back up light switch connector and speedometer sensor connector.

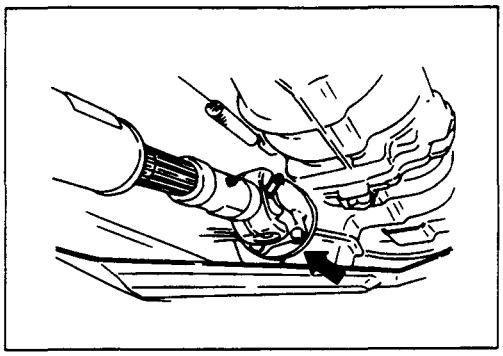

Front Propeller Shaft

1. Connect the propeller shaft flange yoke to the matching flange.
2. Tighten the propeller shaft flange yoke bolt to the specified torque.

Propeller Shaft Flange Yoke Bolt Torque kg·m (lb·ft/N·m)
6.4 ± 0.4 (46.3 ± 2.9/62.7 ± 3.9)

Note:

If the splined yoke and the front propeller shaft have accidentally separated, align their setting marks and recouple them.
Refer to "FRONT PROPELLER SHAFT REMOVAL".

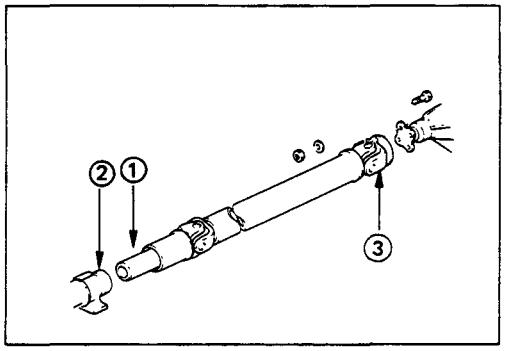

Rear Propeller Shaft (Single Shaft Type)

1. Insert the splined yoke ① with the propeller shaft into the transmission main shaft spline ②.
2. Install the propeller shaft flange yoke ③ to the drive pinion side.
3. Tighten the propeller shaft flange yoke bolt to the specified torque.

Propeller Shaft Flange Yoke Bolt Torque kg·m (lb·ft/N·m)
6.4 ± 0.4 (46.3 ± 2.9/62.7 ± 3.9)

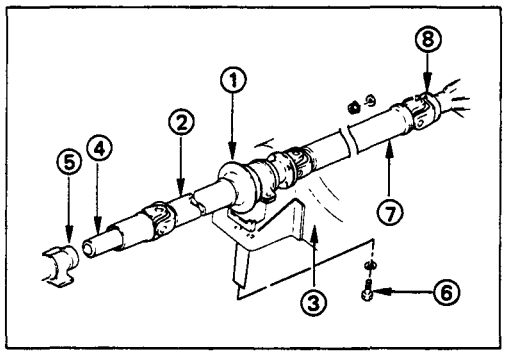

Rear Propeller Shaft (Dual Shaft Type)

1. Place the center bearing ① together with the 1st propeller shaft ② and 2nd propeller shaft ⑦ on the No.4 crossmember ③.
2. Insert the splined yoke ④ into the transmission main shaft spline ⑤.
3. Tighten the center bearing retainer bolts ⑥ to the specified torque.

Center Bearing Retainer Bolt Torque kg·m(lb·ft/N·m)
6.2 ± 1.2 (44.8 ± 8.7/60.8 ± 11.8)

4. Connect the 2nd propeller shaft ⑦ and drive pinion side ⑧.

   Be sure to align the setting marks applied at disassembly.
5. Tighten the coupling bolts to the specified torque.

Propeller Shaft Flange Yoke Bolt Torque kg·m(lb·ft/N·m)
6.4 ± 0.4 (46.3 ± 2.9/62.7 ± 3.9)

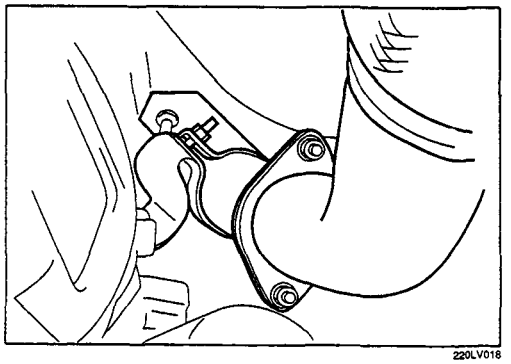

Exhaust Pipe

1. Connect the front exhaust pipe and 2nd-3rd exhaust pipe.
2. Install the exhaust pipe bracket to the transmission case.

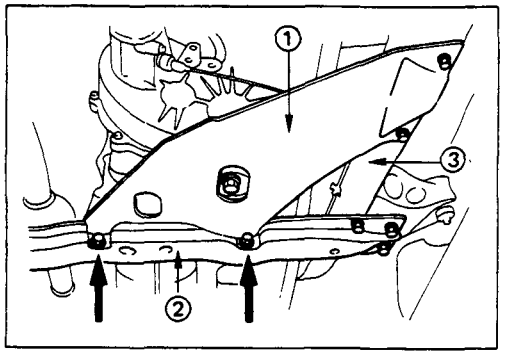

Transfer Case Protector

1. Install the transfer case protector ① to the mounting member ② and the sidemembers ③.
2. Tighten the transfer case protector bolts to the specified torque.

Transfer Case Protector Bolt Torque	kg·m(lb·ft/N·m)
3.7 ± 1.0 (26.8 ± 7.2/36.3 ± 9.8)	

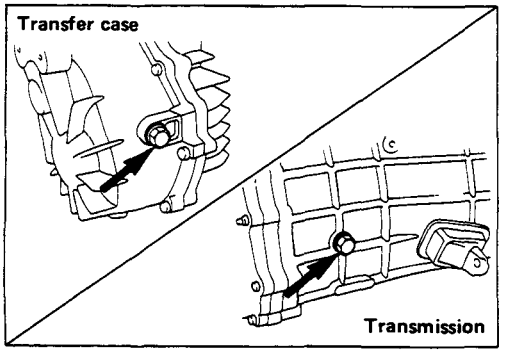

Gear Shift Lever and Transfer Change Lever

1. Replenish the transmission case and the transfer case with the specified engine oil.

Transmission and Transfer Case Oil	lit (US/UK qt.)
Transmission Case	2.95 (3.12/2.6)
Transfer Case	1.45 (1.53/1.28)

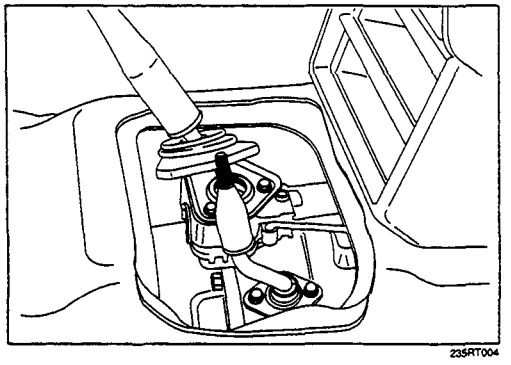

2. Install the gear shift lever to the gear control box.

Shift Lever Cover Bolt Torque	kg·m(lb·ft/N·m)
2.0 ± 0.2 (14.5 ± 1.5/19.6 ± 1.96)	

3. Install the dust cover.
4. Insert the tranfer change lever to the transfer case.

Change Lever Retainer Bolt Torque	kg·m(lb·ft/N·m)
2.0 ± 0.2 (14.5 ± 1.5/19.6 ± 1.96)	

5. Install the grommet
6. Install the front console assembly and center console assembly.
7. Install the gear shift lever and the transfer change lever knobs.

Lowering the Vehicle

1. Place a jack beneath the vehicle.
2. Raise the jack to remove the chassis stands.
3. Lower the vehicle to the ground.

Engine Hood

Align the setting marks (applied at removal) on the engine hood and the engine hood hinges to install the engine hood.

Battery Cable

Connect the negative (–) cable to the battery terminal.

DISASSEMBLY

EXTERAL COMPONENTS

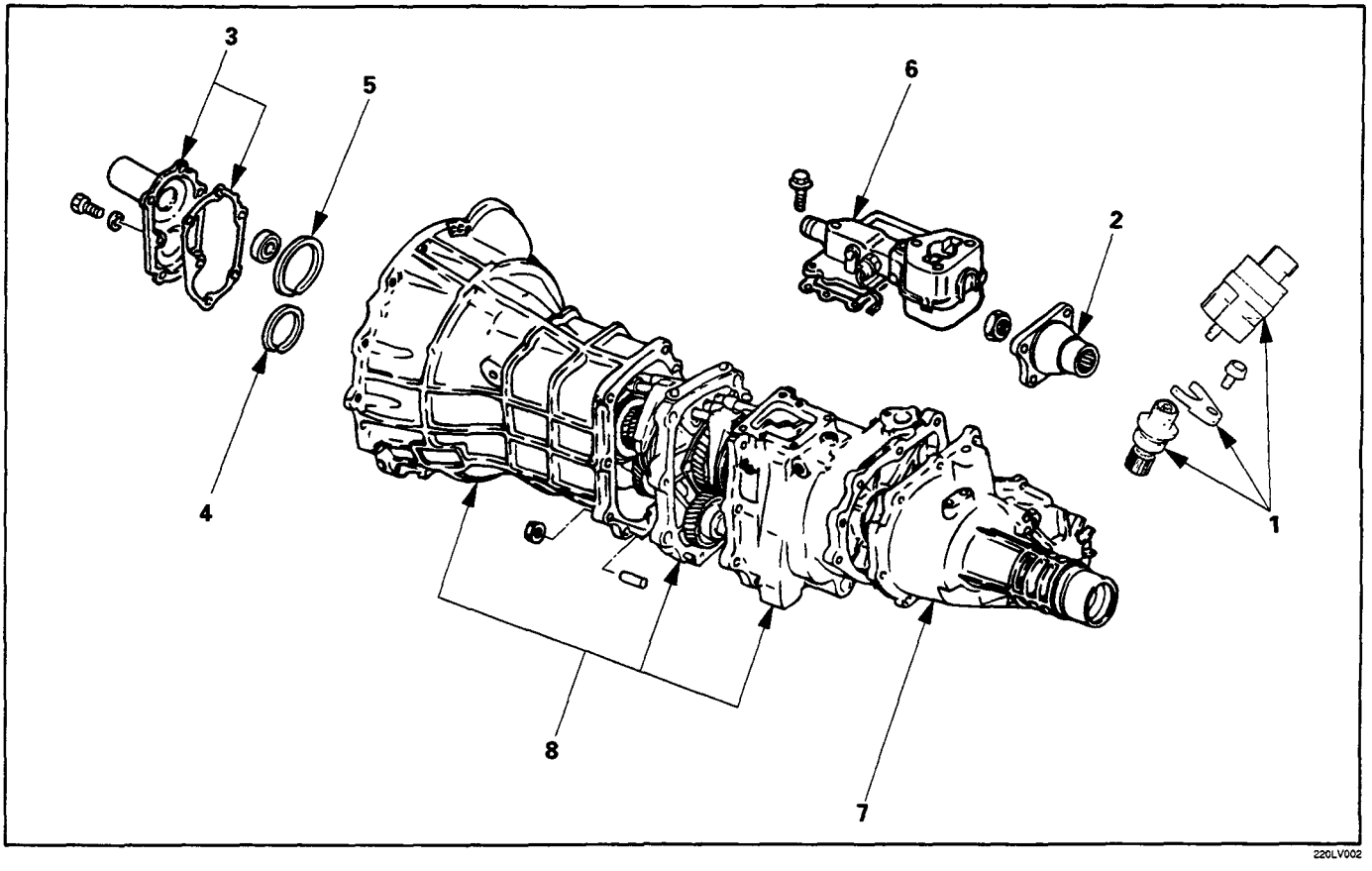

Disassembly Steps

- ▲ 1. Speedometer sensor and speedometer driven gear
- ▲ 2. Transfer flange
- ▲ 3. Front cover with oil seal
- ▲ 4. Counter gear snap ring
- ▲ 5. Bearing snap ring
- 6. Gear control box assembly
- 7. Transfer rear case assmbly
- 8. Transmission and transfer case assembly

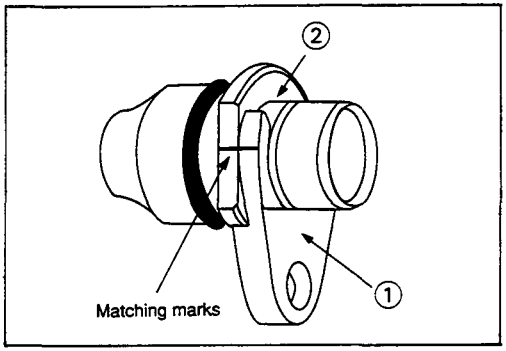

Important Operations

1. Speedometer Sensor and Speedometer Driven Gear

Mark the plate ① and bush ② alignment for reassembly.

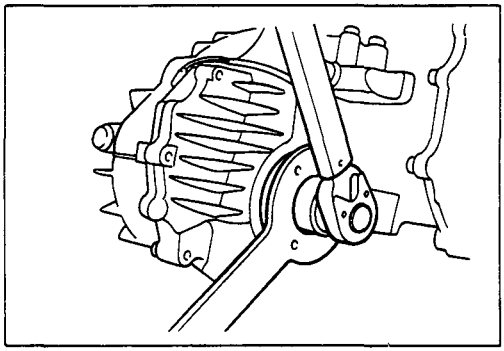

2. Transfer Flange

Use the transfer flange holder to remove the transfer flange.

Transfer Flange Holder: 5-8840-2157-0 (J-37221)

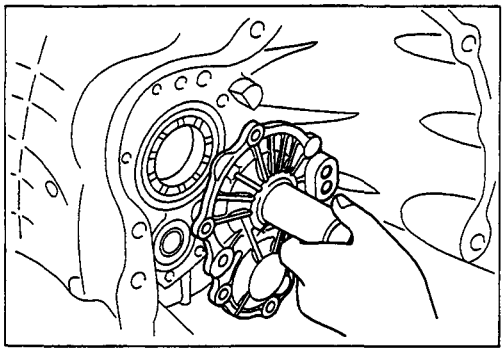

220RT017

3. Front Cover with Oil Seal

Remove the front cover with oil seal from the transmission case.

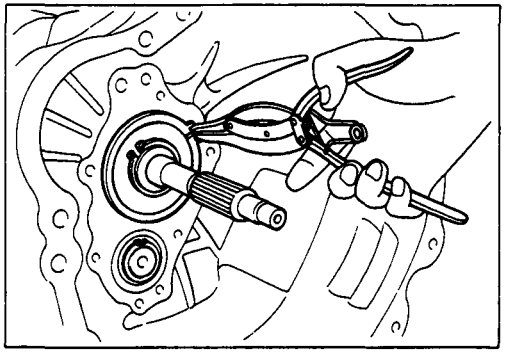

4. *Counter Gear Snap Ring*

5. Bearing Snap Ring

Use a pair of snap ring pliers to remove the snap ring.

MAJOR COMPONENT (TRANSFER CASE)

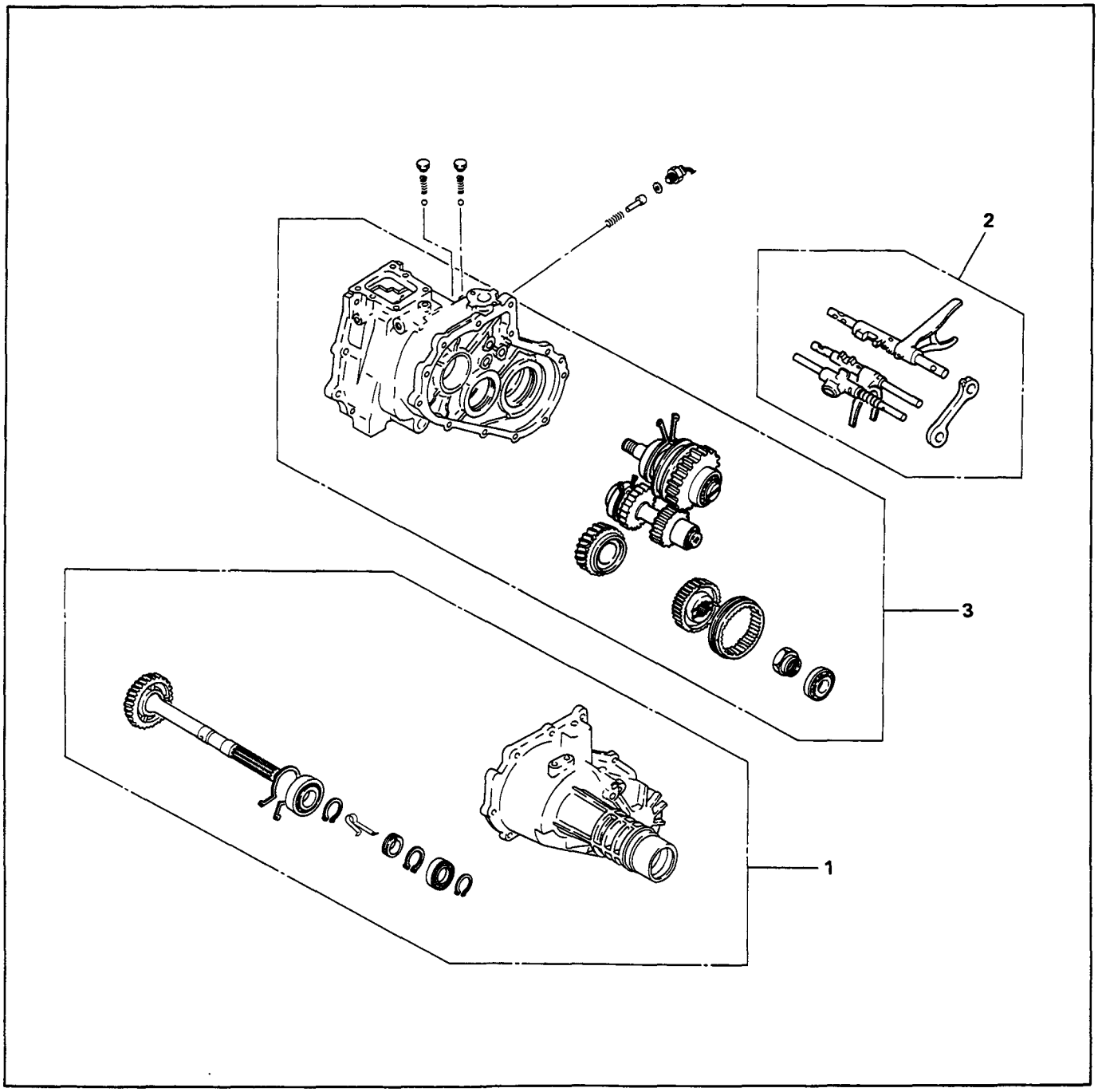

Disassembly Steps

1 Transfer rear case assembly
2. Shift fork assembly & interlock pin & detent assembly
3. Transfer case assembly

MAJOR COMPONENT (TRANSMISSION)

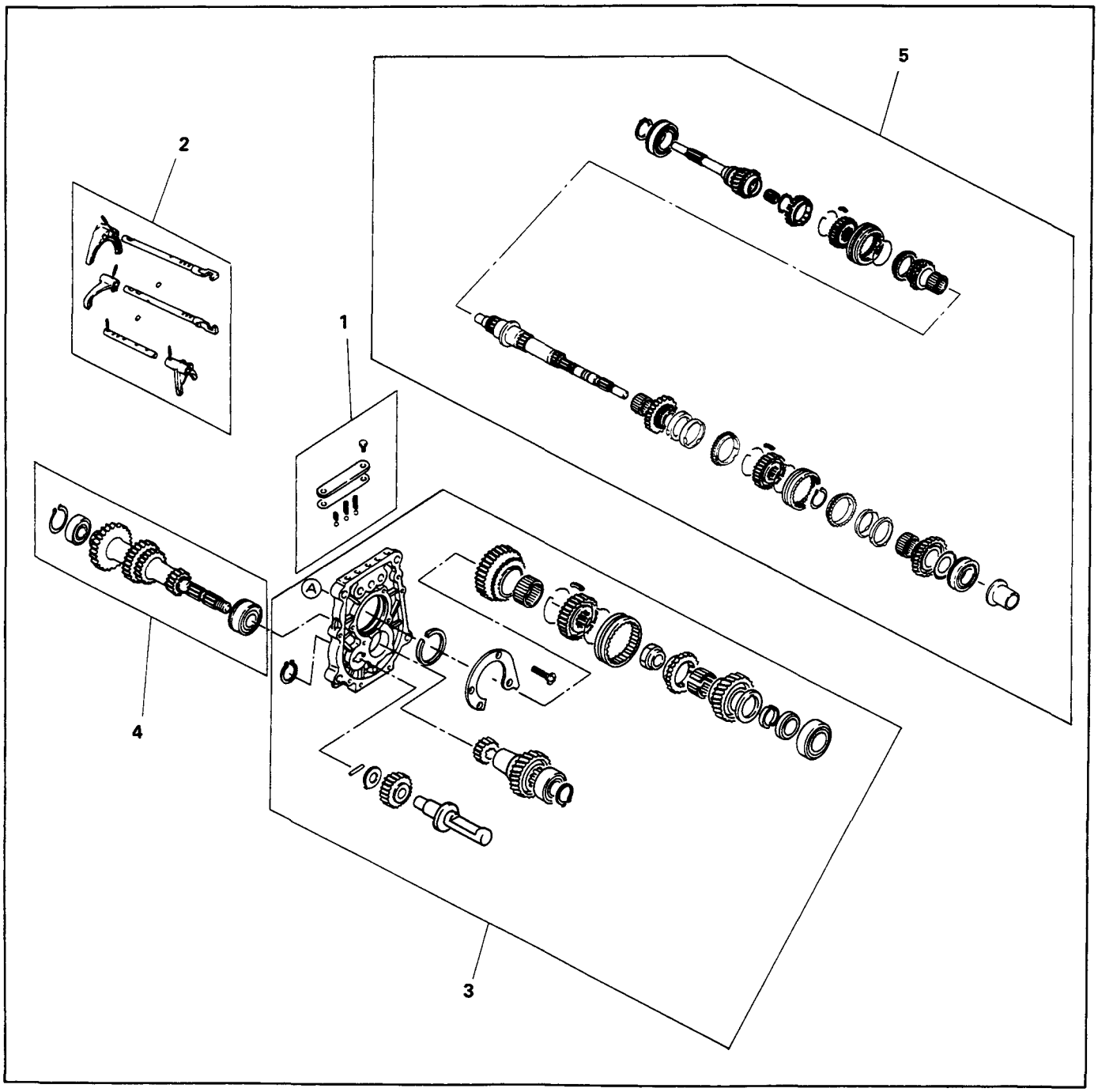

Disassembly Steps

1 Detent assembly
2. Shift fork assembly & interlock pin
3. Rev. and 5th gear assembly
4. Counter gear shaft assembly
5. Top & main gear shaft assembly

MINOR COMPONENT

TRANSFER REAR CASE ASSEMBLY

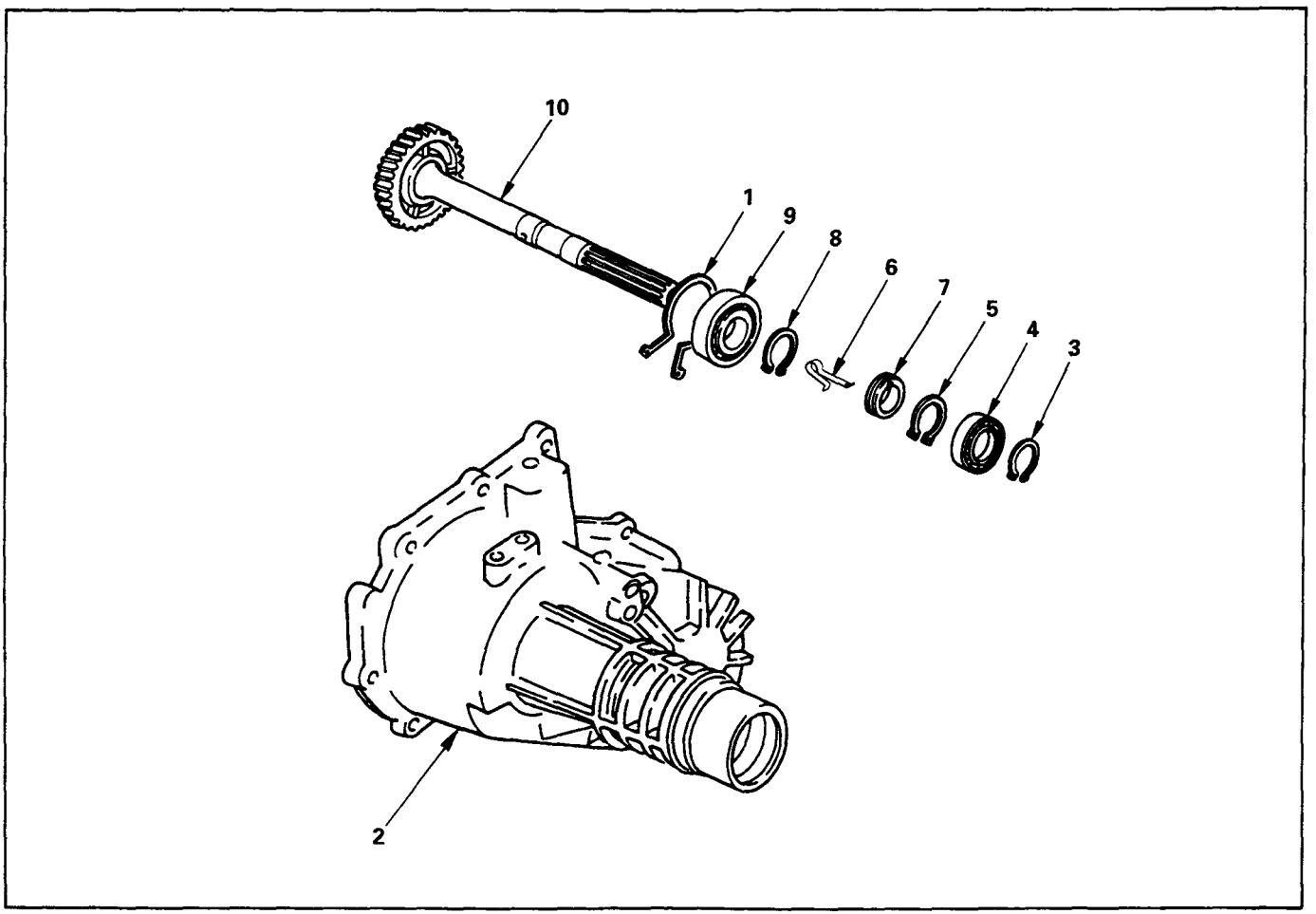

Disassembly Steps

▲ 1. Bearing snap ring
2. Transfer rear case
3. Bearing snap ring
▲ 4. Ball bearing
5. Bearing snap ring
6. Clip
7. Speedometer drive gear
8. Bearing snap ring
▲ 9. Ball bearing
10. Rear output shaft

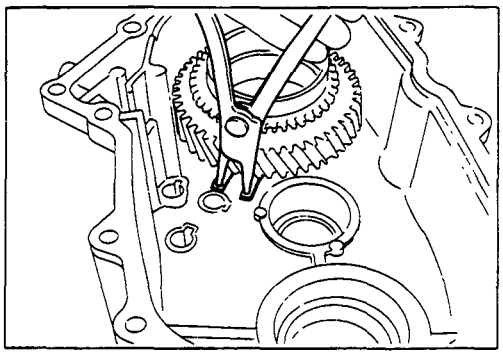

Important Operations

1. Bearing Snap Ring

Use a pair of snap ring pliers to remove the snap ring.

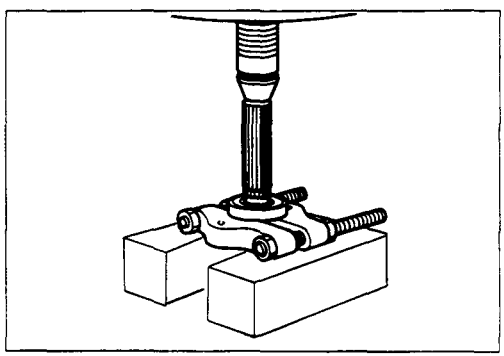

4. Ball Bearing

Use a bench press and the bearing remover to remove the ball bearing.

Bearing Remover: 5-8840-0015-0 (J-22912-01)

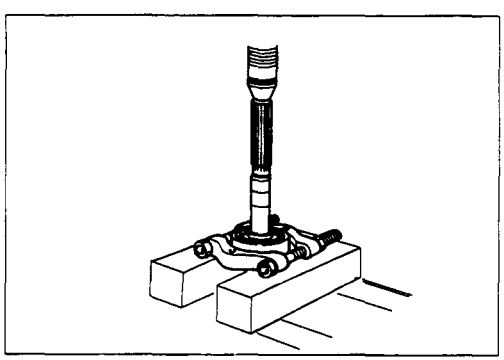

9. Ball Bearing

Use a bench press and the bearing remover to remove the ball bearing.

DETENT, SHIFT ARM ASSEMBLY AND INTERLOCK PIN

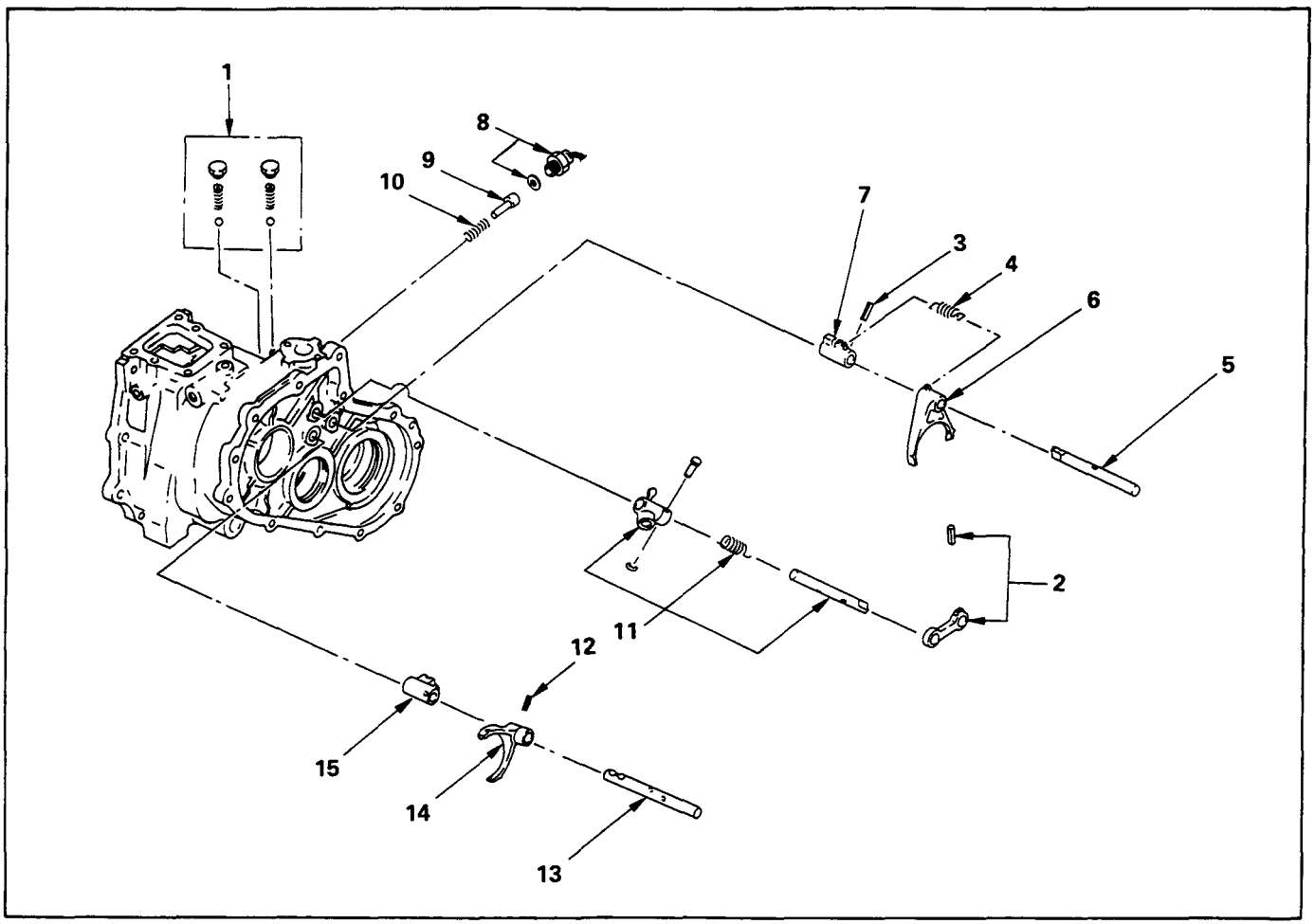

Disassembly Steps

1. Detent ball, spring and plug
▲ 2. Pin and bridge
3. Pin
4. Spring
▲ 5. 2WD-4WD shift rod
6. Shift arm
7. Shift block
8. 4WD indicator switch
▲ 9. Interlock pin
10. Spring
11. Select rod assembly
12. Pin
▲ 13. High-low shift rod
14. Shift arm
15. Shift block

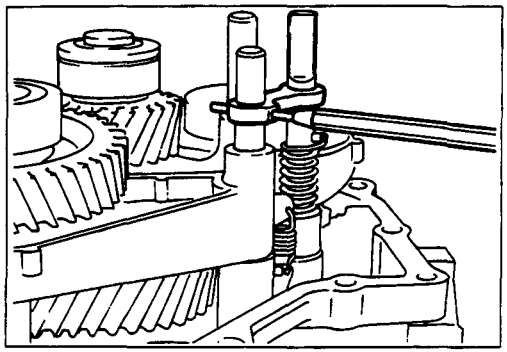

Important Operations

2. Bridge

Use a spring pin remover to remove the spring from the bridge.

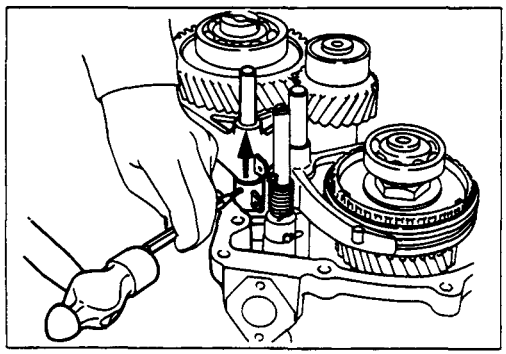

5. 2WD-4WD Shift Rod

1) Engage the 2nd-4th sleeve with the front output gear.
2) Remove the spring pin from the block.
3) Remove the shift rod.

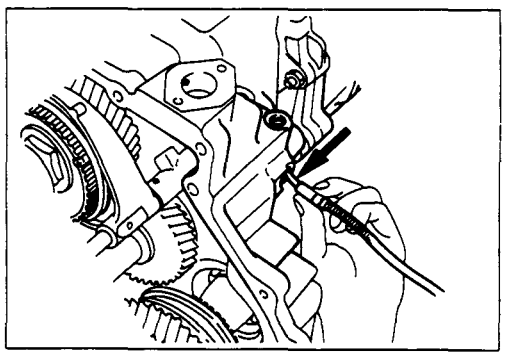

9. Interlock Pin

Use a magnetic tool to remove the interlock pin from the transfer case.

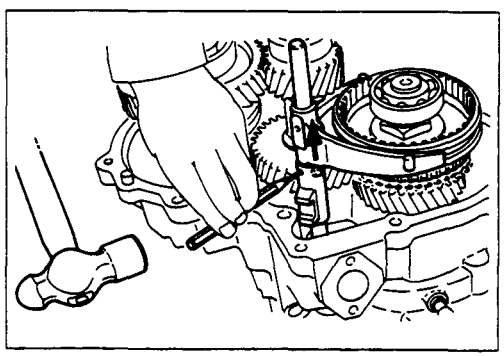

13. High-Low Shift Rod

Use a spring pin remover to remove the shift arm spring from the shift arm and the shift rod.

TRANSFER CASE ASSEMBLY AND MAINSHAFT GEAR

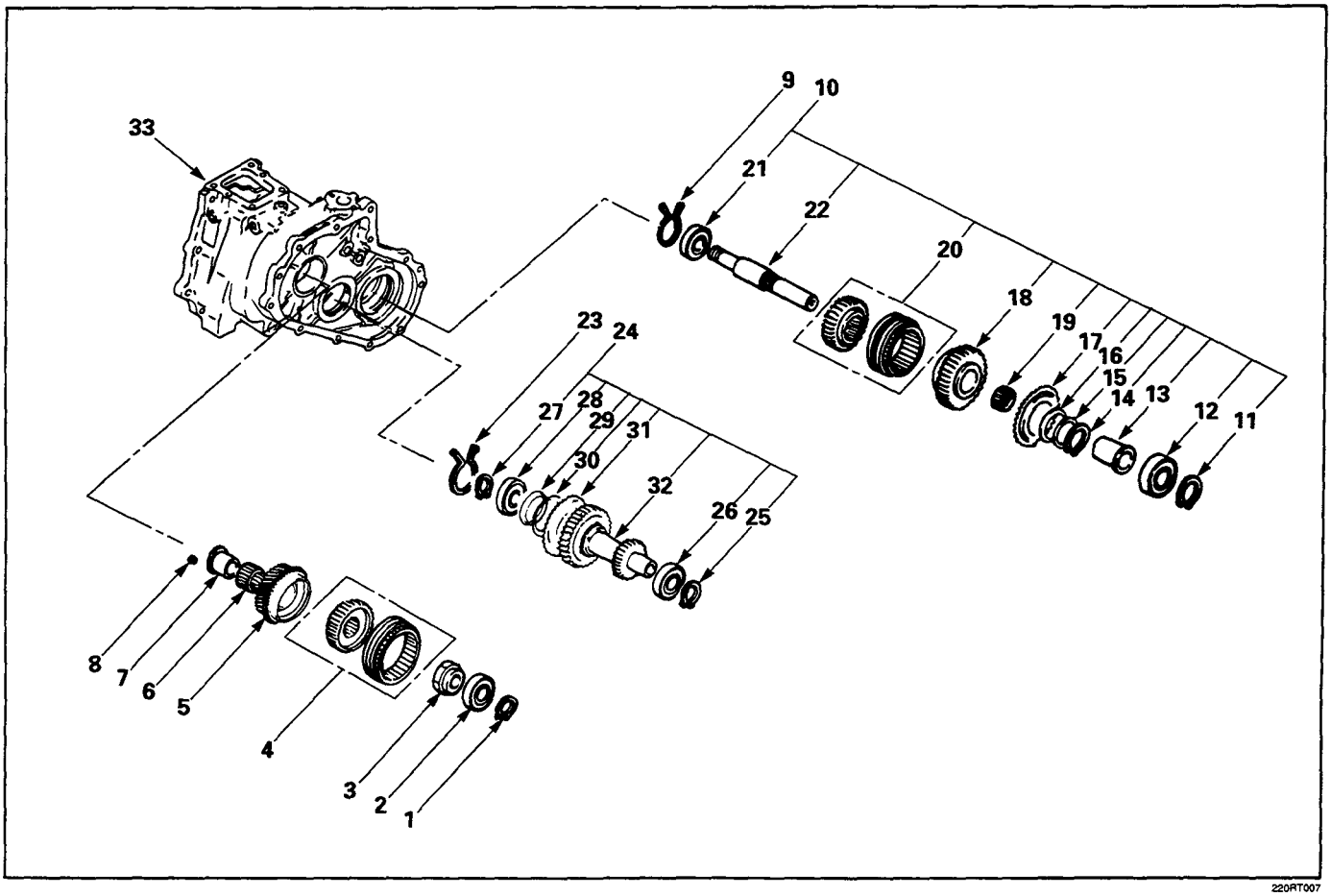

Disassembly Steps

1. Bearing snap ring
▲ 2. Mainshaft end ball bearing
▲ 3. Mainshaft end lock nut
▲ 4. High-low clutch hub and sleeve
▲ 5. Transfer input gear
6. Needle bearing
▲ 7. Bearing collar
8. Ball
▲ 9. Bearing snap ring
10. Front output gear assembly
11. Bearing snap ring
▲ 12. Ball bearing
13. Bearing collar
▲ 14. Anti-lash plate snap ring
15. Spacer
16. Belleville spring
17. Sub gear (Anti-lash plate)
18. Front output gear
19. Needle bearing
20. Clutch hub and sleeve
▲ 21. Ball bearing
22. Front output shaft
23. Bearing snap ring
24. Counter gear assembly
25. Bearing snap ring
▲ 26. Ball bearing
27. Bearing snap ring
▲ 28. Ball bearing
29. Spacer
30. Belleville spring
31. Sub gear (Anti-lash plate)
32. Counter gear
33. Transfer case

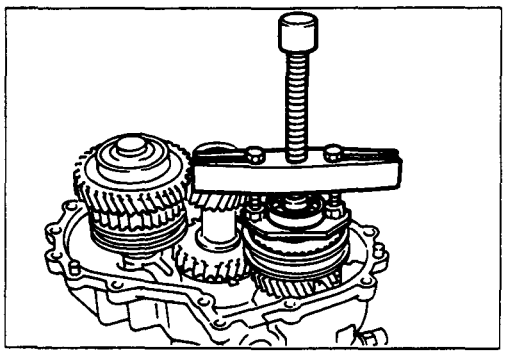

Important Operations

2. Mainshaft End Ball Bearing

Use a bearing remover to remove the ball bearing.

Remover : 5-8840-2155-0 (J-37217)
Puller : 5-8840-2027-0

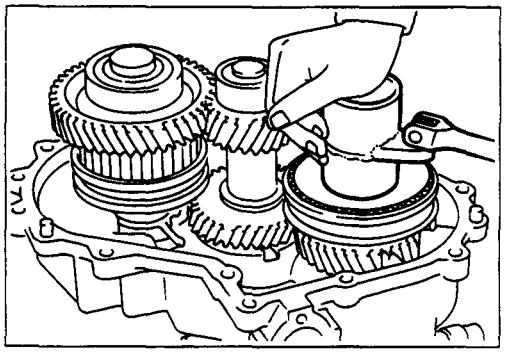

3. Mainshaft End Lock Nut

1) Engage the 3rd-top synchronizer with the 3rd gear.
2) Engage the low-2nd synchronizer with the low gear.
3) Use the lock nut wrench to remove the lock nut.
   Lock Nut Wrench: 5-8840-2156-0 (J-37219)

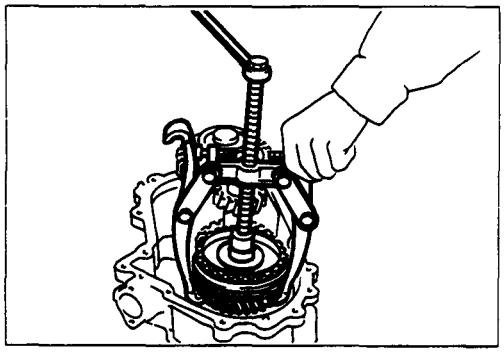

4. High-Low Clutch Hub and Sleeve

5. *Transfer Input Gear*

Use the universal puller to remove the high-low synchronizer assembly, the high-low block ring, and the *transfer input gear.*

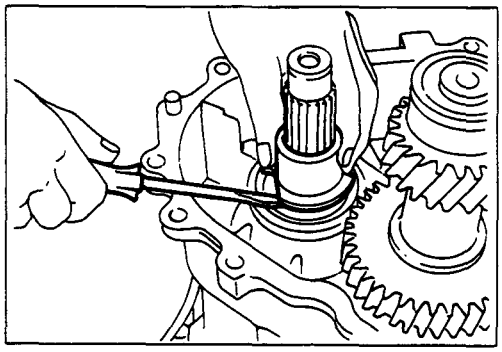

7. 8. Bearing Collar and Ball

Using screw driver to remove the bearing collar.

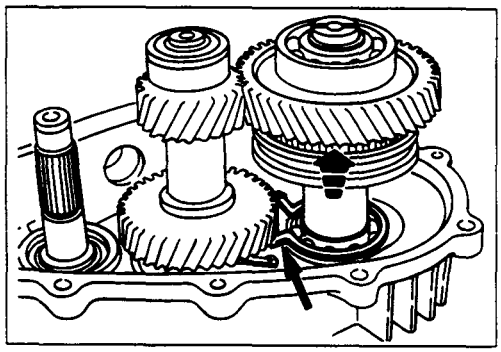

9. Bearing Snap Ring

Use a pair of snap ring pliers to expand the bearing snap ring.

Use a plastic hammer to tap the front output gear assembly free.

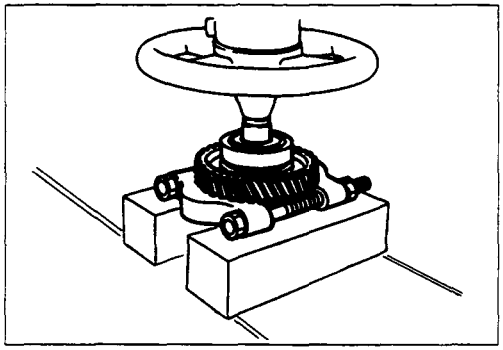

12. Ball Bearing

Use a bench press and the ball bearing remover to remove the ball bearing.

Bearing Remover: 5-8840-0015-0 (J-22912-01)

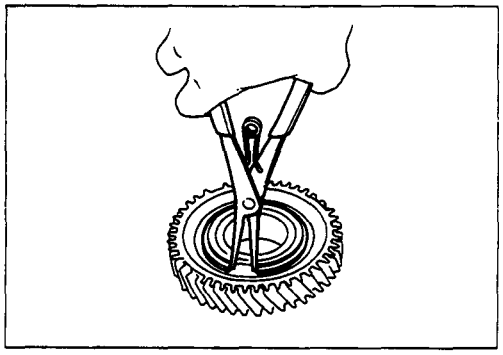

14. Anti-lash Plate Snap Ring

Use a pair of pliers to remove the snap ring.

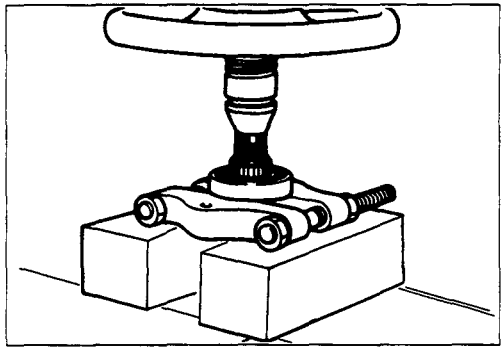

21. Ball Bearing

Use a bench press and the bearing remover to remove the ball bearing.

Bearing Remover: 5-8840-0015-0 (J-22912-01)

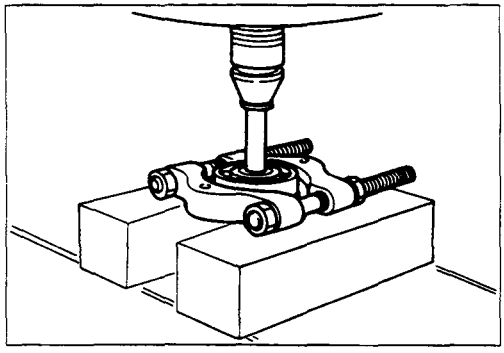

26. Ball Bearing
28. Ball Bearing

Use a bench press and the bearing remover to remove the ball bearings.

MINOR COMPONENT

INTERMEDIATE PLATE AND GEAR ASSEMBLY, DETENT, SHIFT ARM ASSEMBLY, AND INTERLOCK PIN

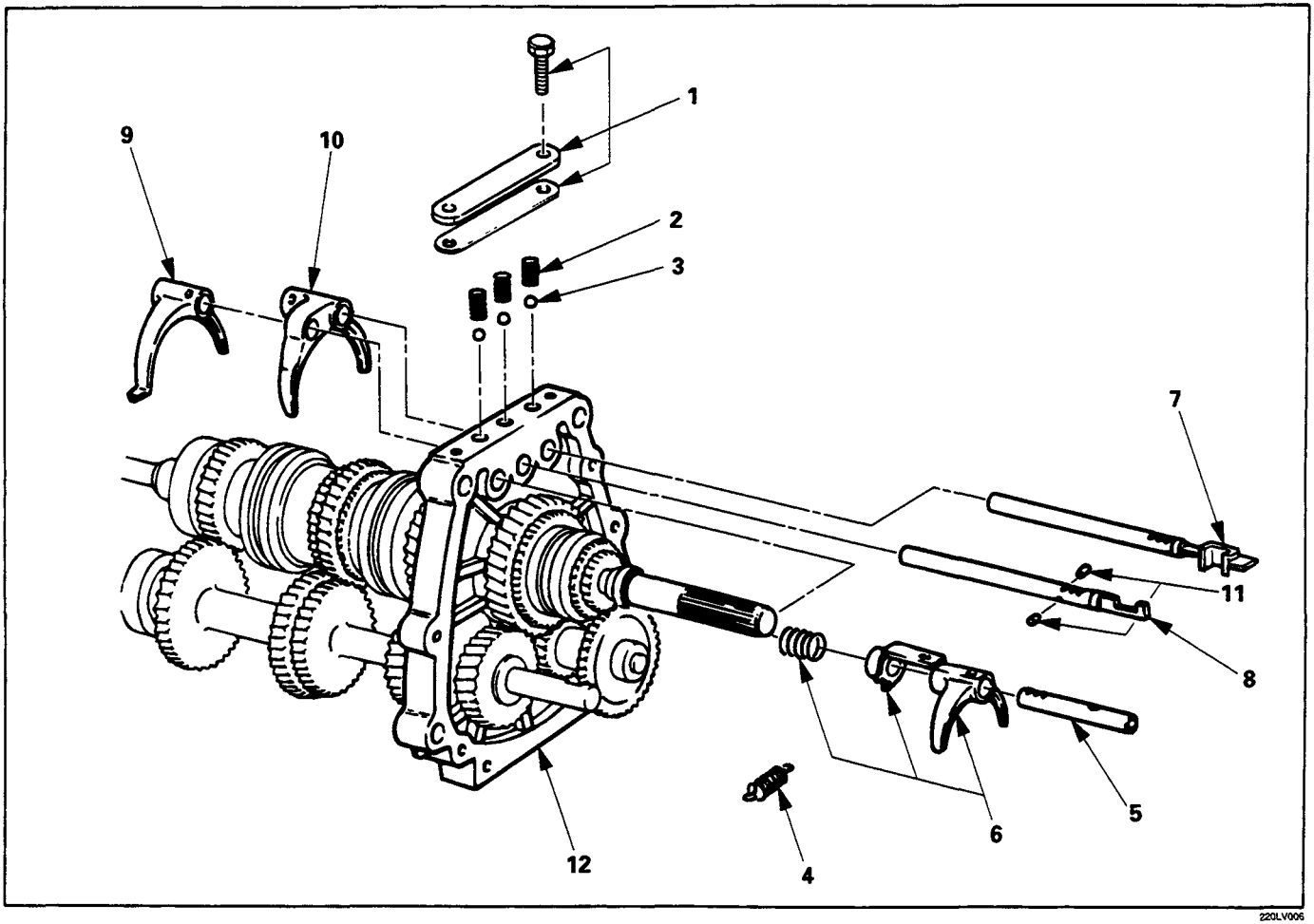

Disassembly Steps

1. Detent spring plate and gasket
2. Detent spring
3. ▲ Detent ball
4. Spring
5. Rev-5th shift rod
6. Rev-5th shift arm and reverse inhibitor
7. 1st-2nd shift rod
8. ▲ 3rd-4th shift rod
9. ▲ 3rd-4th shift arm
10. ▲ 1st-2nd shift arm
11. ▲ Interlock pin
12. Intermediate plate and gear assembly

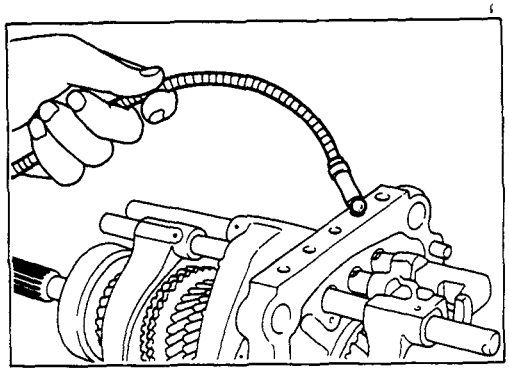

Important Operations

3. Detent Ball

Use a magnetic tool to remove the detent balls from the intermediate plate.

Take care not to lose the detent balls.

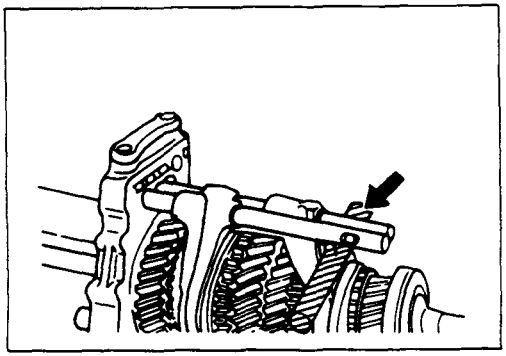

8. 3rd-4th Shift Rod
9. 3rd-4th Shift Arm
10. 1st-2nd Shift Arm

1) Hold a round bar against the shift arm end.
   This will prevent damage to other components.

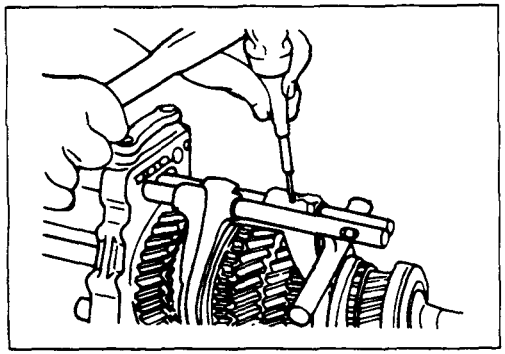

2) Use a spring pin remover to remove the shift arm spring pin from the shift arm and the shift rod.
   Discard the used spring pin.
3) Move the 3rd-4th shift rod forward.
   Take care not to lose the interlock pins.

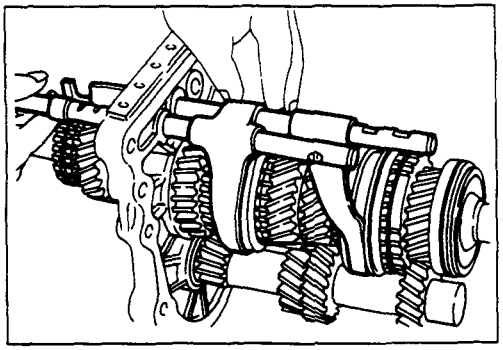

11. Interlock Pin

Carefully remove the reverse shifter rod forward to avoid losing the interlock pins.

Note:

Remove the shifter rods carefully. Interlock pins are located between the shifter rod in the intermediate plate.

REVERSE GEAR AND 5TH GEAR

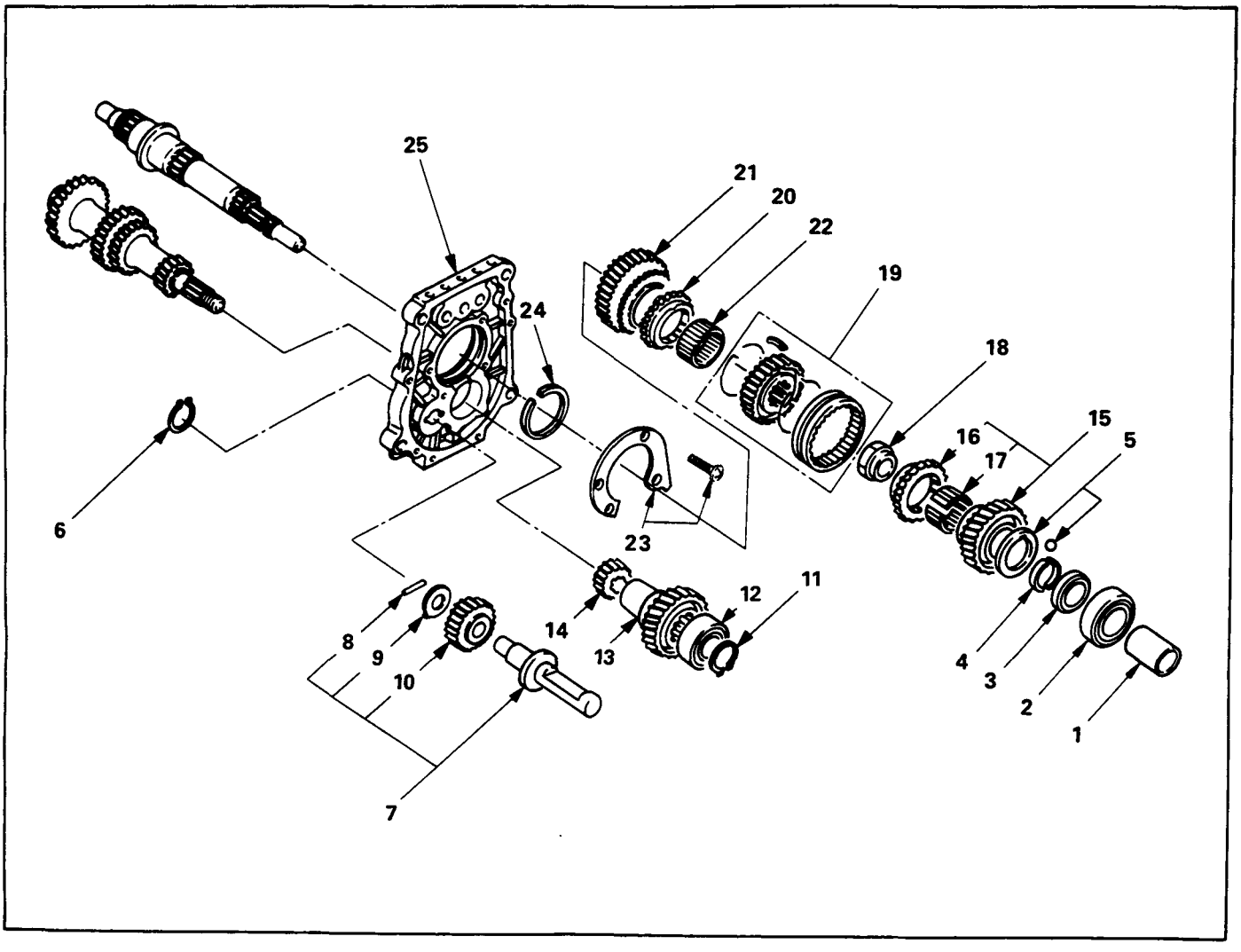

Disassembly Steps

- ▲ 1. Oil seal collar
- ▲ 2. Bearing
- ▲ 3. Retainer
- 4. Thrust plate
- 5. Thrust washer and lock ball
- ▲ 6. Reverse idler gear snap ring
- 7. Reverse idler shaft
- 8. Idle shaft pin
- 9. Thrust washer
- 10. Reverse idler gear
- 11. Bearing snap ring
- ▲ 12. Ball bearing
- ▲ 13. Counter 5th gear
- 14. Counter reverse gear
- 15. 5th gear
- 16. 5th block ring
- ▲ 17. Needle bearing
- ▲ 18. Clutch hub nut
- ▲ 19. Rev-5th synchronizer assembly
- ▲ 20. Reverse block ring
- ▲ 21. Reverse gear
- 22. Needle bearing
- ▲ 23. Bearing plate and screw
- ▲ 24. Bearing snap ring
- ▲ 25. Intermediate plate

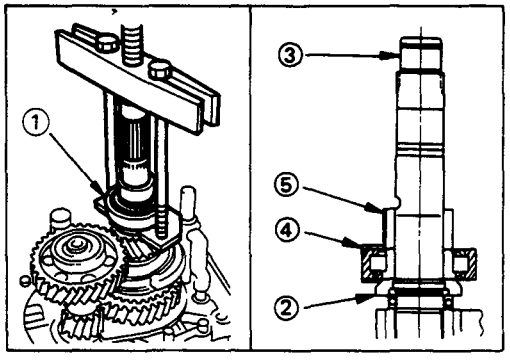

Important Operations

1. Oil Seal Collar

2. Bearing

3. Retainer

1) Set the retaining ring remover ① to the retainer ② and the mainshaft end ③.
2) Remove the retainer together with the bearing ④ and the oil seal collar ⑤.

The universal puller may be used in place of the retaining ring remover.

Retainer Remover: 5-8840-2158-0 (J-37222)

Universal Puller: 5-8840-2027-0

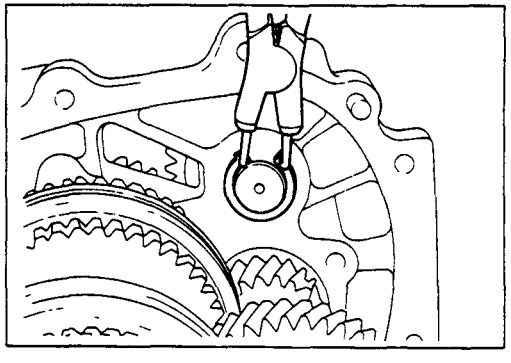

6. Reverse Idler Gear Snap Ring

Use a pair of snap ring pliers to remove the snap ring.

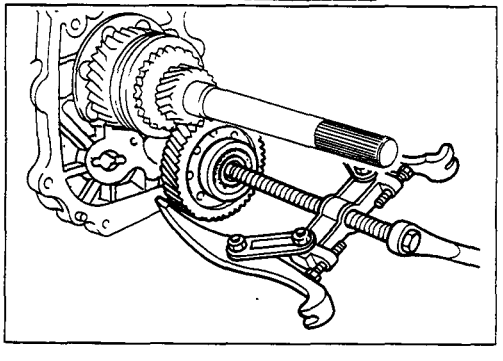

12. Ball Bearing

13. Counter 5th Gear

Use the bearing remover to remove the ball bearing.

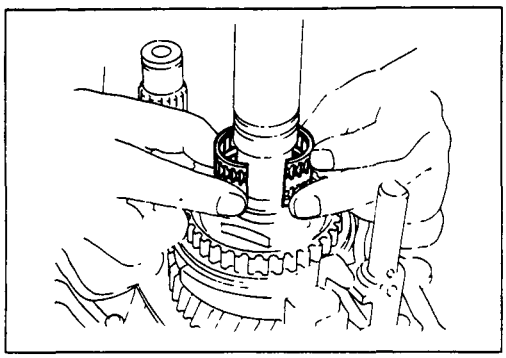

17. Needle Bearing

Remove the needle bearing (2 piece type).

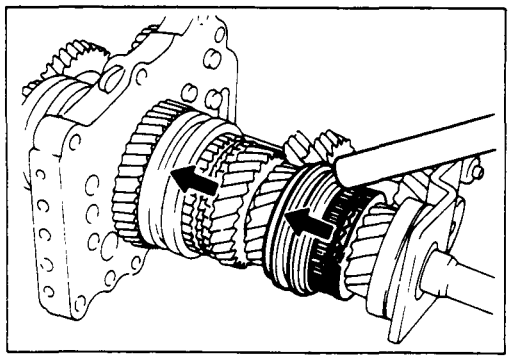

18. Clutch Hub Nut

1) Engage the 3rd-4th synchronizer with the 3rd gear.
2) Engage the 1st-2nd synchronizer with the 1st gear.
3) Attach the holding fixture together with the holding base to the mainshaft front bearing and the counter gear front bearing.

   Holding Fixture: 5-8840-2160-0 (J-37224)

   Holding Base: 5-8840-0003-0 (J-3289-20)

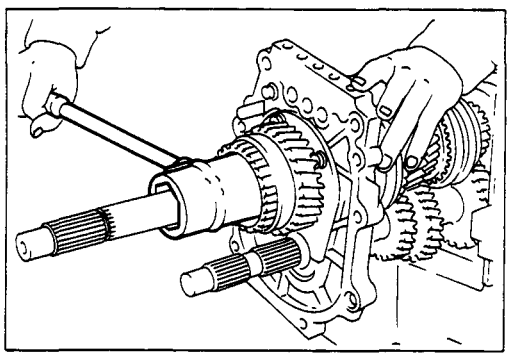

4) Use the hub nut wrench to remove the hub nut.

   Hub Nut Wrench: 5-8840-2156-0 (J-37219)

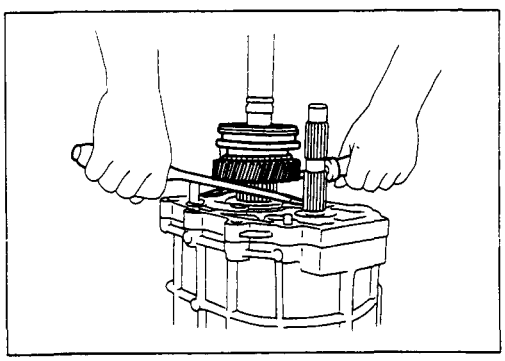

19. Rev.-5th Synchronizer Assembly

20. Reverse Ring

21. Reverse Gear

Use screw drivers between the reverse gear and bearing plate to remove the Rev.-5th synchronizer assembly together with reverse ring and gear.

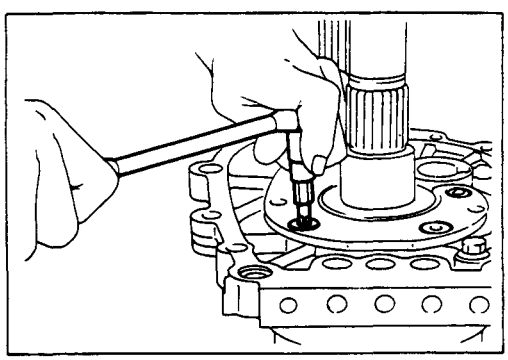

23. Bearing Plate and Screw

Use the Torx bit to remove the bearing plate screw from the intermediate plate.

Torx Bit Wrench: 5-8840-0047-0 (J-37225) (T45)

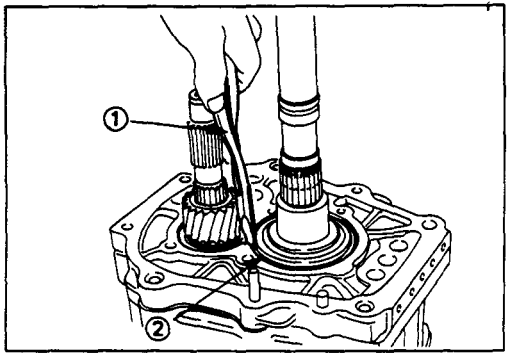

24. Ball Bearing Snap Ring

25. Intermediate Plate

1) Insert the snap ring pliers into the mainshaft bearing snap ring hole.
2) Use the snap ring pliers ① to force open the mainshaft bearing snap ring ②.

   Hold the snap ring open with the pliers.
3) Push the intermediate plate toward the rear of the transmission to remove it.

   The ball bearing snap ring will come free.

TOP GEAR SHAFT, MAIN GEAR SHAFT, AND COUNTER GEAR

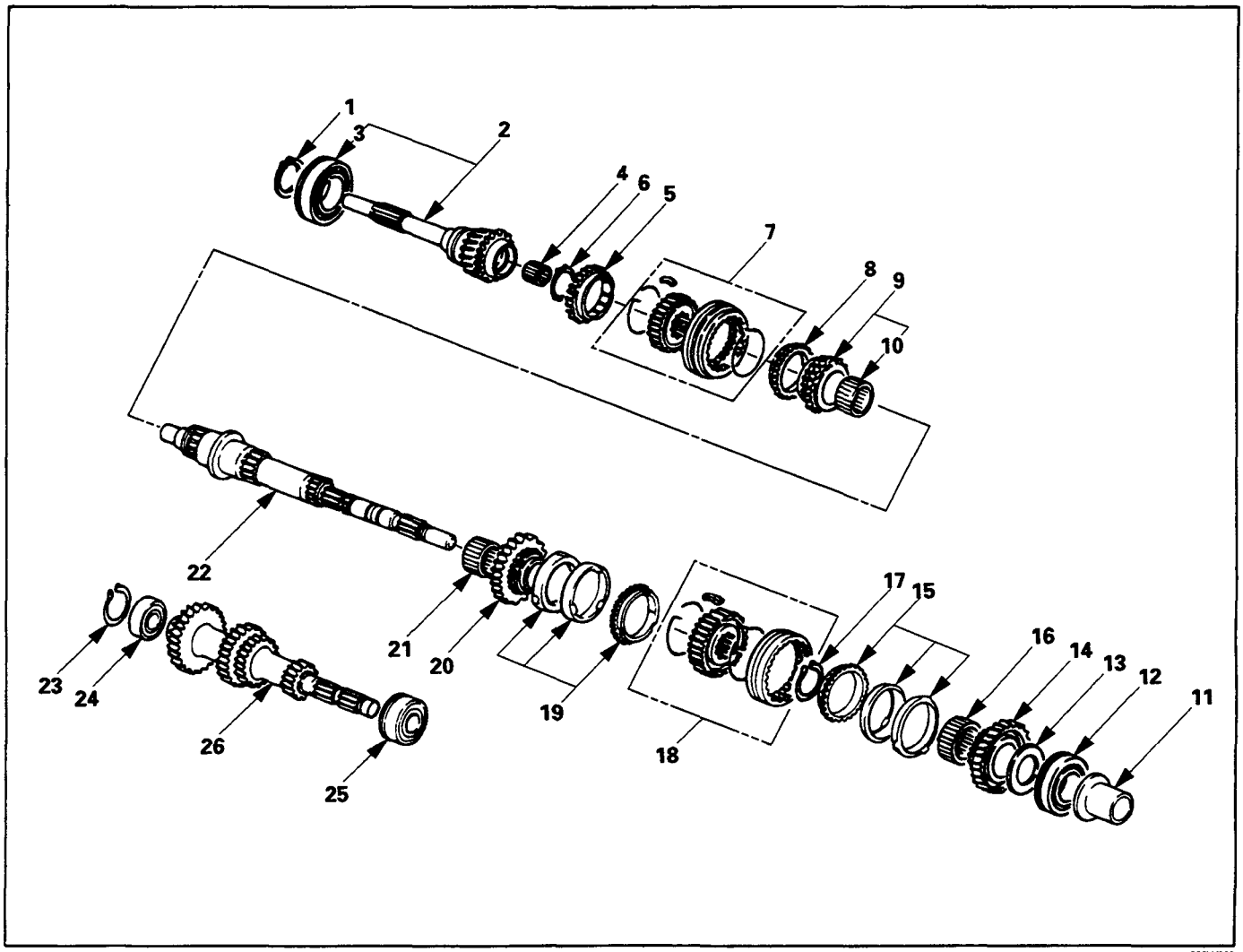

Disassembly Steps

1. Top gear shaft snap ring
2. Top gear shaft
▲ 3. Top gear ball bearing
4. Needle bearing
5. Top block ring
▲ 6. Mainshaft snap ring
▲ 7. 3rd-4th synchronizer assembly
8. 3rd block ring
9. 3rd gear
10. Needle bearing
▲ 11. Needle bearing collar
▲ 12. Mainshaft ball bearing
▲ 13. 1st gear thrust bearing
▲ 14. 1st gear
15. 1st block ring (set)
16. Needle bearing
▲ 17. Clutch hub snap ring
▲ 18. 1st-2nd synchronizer assembly
▲ 19. 2nd block ring (set)
▲ 20. 2nd gear
21. Needle bearing
22. Mainshaft
23. Bearing snap ring
▲ 24. Counter gear front bearing
25. Counter gear center bearing
26. Counter gear

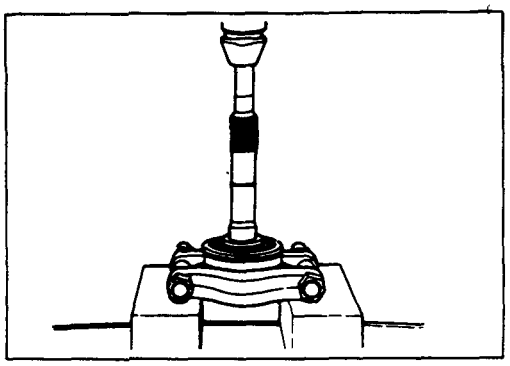

Important Operations

3. Top Gear Ball Bearing

Use a bench press and the bearing remover to remove the ball bearing.

Bearing Remover : 5-8840-0015-0 (J-22912-01)

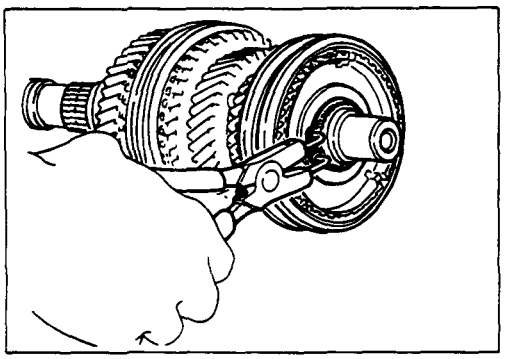

6. Mainshaft Snap Ring

Use a pair of snap ring pliers to remove the snap ring.

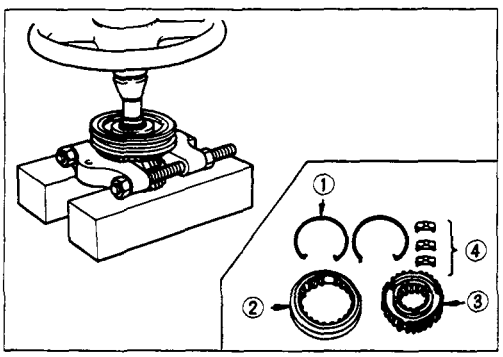

7. 3rd-4th Synchronizer Assembly

1) Use a bench press and the bearing replacer to remove the synchronizer assembly as a set.
2) Disassemble the synchronizer assembly.
   ① Springs
   ② Sleeve
   ③ Clutch Hub
   ④ Inserts

Note:

Mark the hub and sleeve alignment for reassembly.

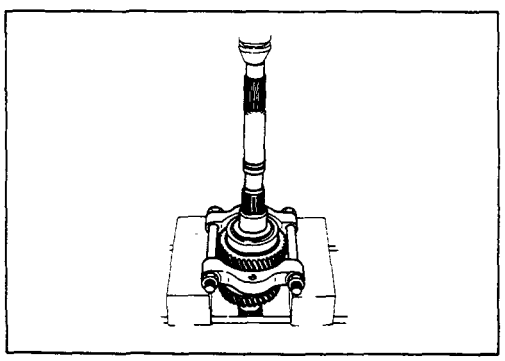

11. Needle Bearing Collar
12. Mainshaft Ball Bearing
13. 1st Gear Thrust Bearing
14. 1st Gear

Use a bench press and the bearing remover to remove the ball bearing.

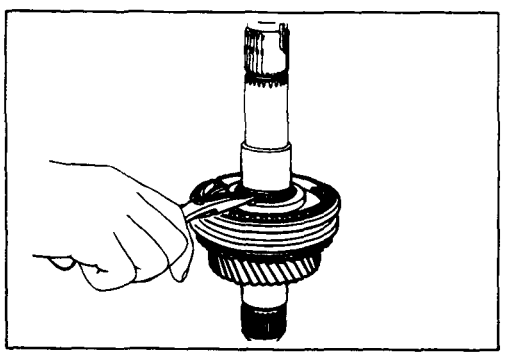

17. Clutch Hub Snap Ring

Use a pair of snap ring pliers to remove the snap ring.

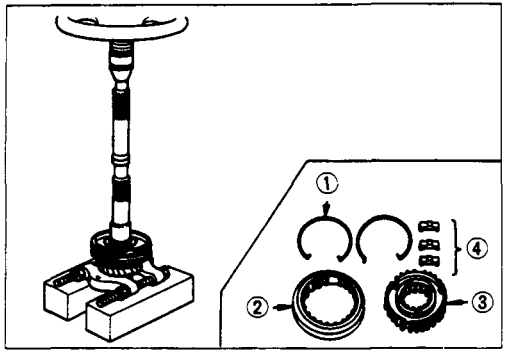

18. 1st-2nd Synchronizer Assembly

19. 2nd Block Ring (Set)

20. 2nd Gear

1) Use a bench press and the bearing remover to remove the ball bearing 2nd gear together with synchronizer assembly.

   Remover: 5-8840-0015-0 (J-22912-01)

2) Disassemble the synchronizer assembly.

   ① Springs
   ② Sleeve
   ③ Clutch Hub
   ④ Inserts

Note:

Mark the hub and sleeve alignment for reassembly.

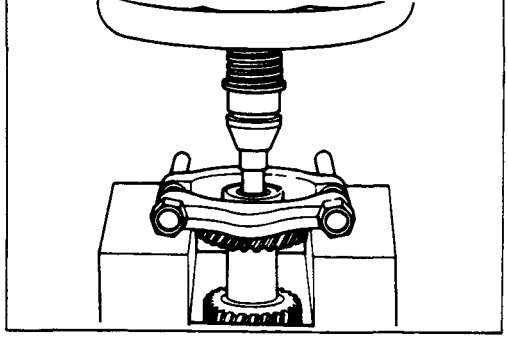

24. Counter Gear Front Bearing

Use a bench press and the bearing remover to remove the bearing.

Bearing Remover: 5-8840-0015-0 (J-22912-01)

INSPECTION AND REPAIR

Make the necessary adjustments, repairs, and part replacements if excessive wear or damage is discovered during inspection.

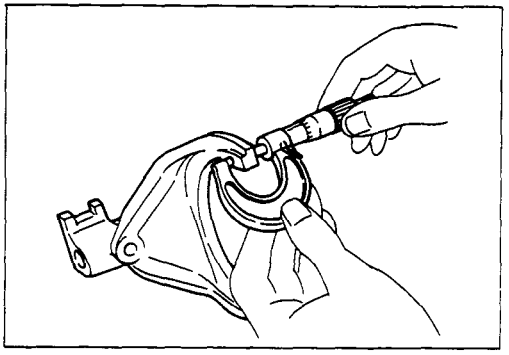

SHIFT ARM THICKNESS

Use a micrometer to measure the shift arm thickness.

If the measured value is less than the specified limit, the shift arm must be replaced.

Shift Arm Thickness — mm(in)

		Standard	Limit
1st–2nd Transfer	4x4/4x2 High/Low	9.60–9.85 (0.378–0.388)	9.0 (0.354)
3rd–4th Rev.–5th		9.60–9.80 (0.378–0.386)	

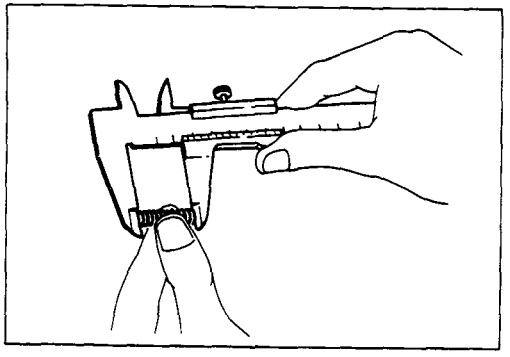

DETENT AND INTERLOCK SPRINGS FREE LENGTH

Use a venier caliper to measure the springs free length.

If the measured value is less than the specified limit, the springs must be replaced.

Springs Free Length — mm(in)

		Standard	Limit
(Detent Ball)	Transmission	26.8 (1.06)	26.2 (1.03)
	Transfer case	23.4 (0.92)	22.8 (0.90)
(Interlock Pin)	Transfer case	1.59 (0.063)	1.53 (0.060)

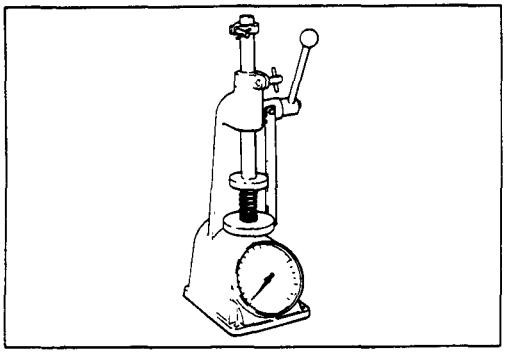

DETENT SPRING TENSION

Use a spring tester to measure the springs tension. If the measured value is less than the specified standard, the springs must be replaced.

Springs Tension kg(lb/N)

		Compressed Height	Standard
(Detent Ball)	Transmission	20 mm (0.787 in)	8.9—9.9 (19.6—21.8/ 87.2—97)
	Transfer case	18.7 mm (0.736 in)	7.0—9.0 (15.4—19.8/ 68.7—88.3)
(Interlock Pin)	Transfer case	11.5 mm (0.453 in)	1.0 (2.2/9.8)

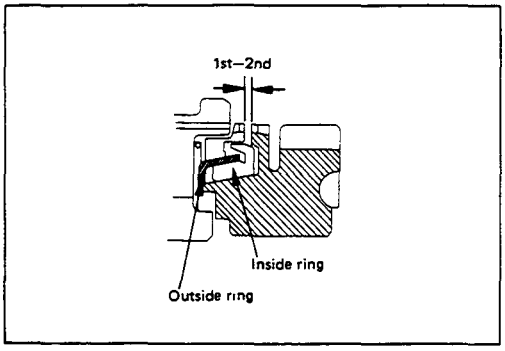

BLOCK RING AND DOG TEETH CLEARANCE

Use a thickness gauge to measure the clearance between the block ring and the dog teeth.

If the measured value exceeds the specified limit, the block ring must be replaced.

Block Ring and Dog Teeth Clearance mm(in)

Standard	Limit
1.5 (0.059)	0.8 (0.032)

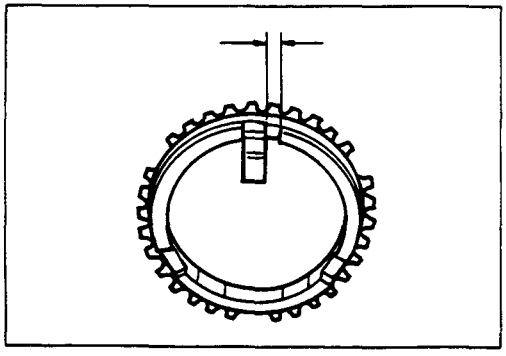

BLOCK RING AND INSERT CLEARANCE

Use a vernier caliper to measure the clearance between the block ring and the insert.

If the measured value exceeds the specified limit, the block ring and the insert must be replaced.

Block Ring and Insert Clearance mm(in)

	Standard	Limit
3rd-4th	3.46–3.74 (0.136–0.147)	4.0 (0.158)
1st-2nd Transfer	4.34–4.66 (0.171–0.183)	4.9 (0.193)
Rev.-5th	3.59–3.91 (0.141–0.154)	4.1 (0.161)

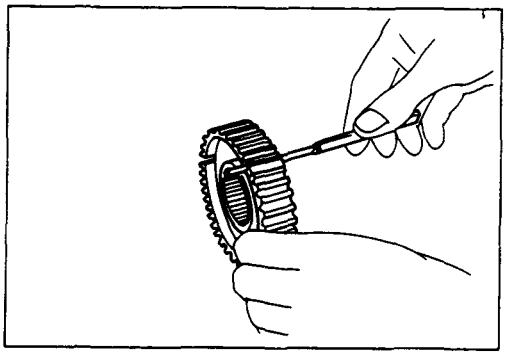

CLUTCH HUB AND INSERT CLEARANCE

Use a thickness gauge to measure the clearance between the clutch hub and the insert.

If the measured value exceeds the specified limit, the clutch hub and the insert must be replaced.

Clutch Hub and Insert Clearance — mm(in)

	Standard	Limit
3rd-4th	0.01-0.19 (0.0004-0.0075)	0.3 (0.012)
1st-2nd Rev.-5th	0.09-0.31 (0.0035-0.0122)	0.4 (0.016)

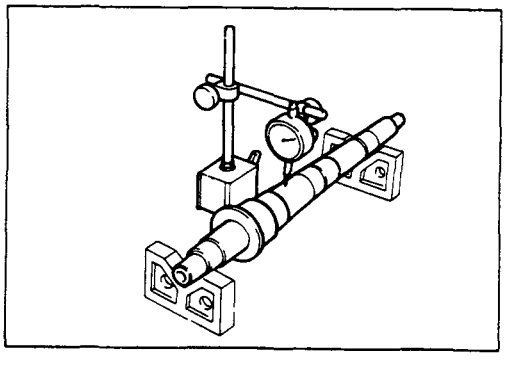

MAINSHAFT RUN-OUT

1. Install the mainshaft to a grinding machine.
2. Use a dial indicator to measure the mainshaft central portion run-out.
   If the measured mainshaft run-out exceeds the specified limit, the mainshaft must be replaced.

Mainshaft Run Out — mm(in)

Limit
0.05 (0.0020)

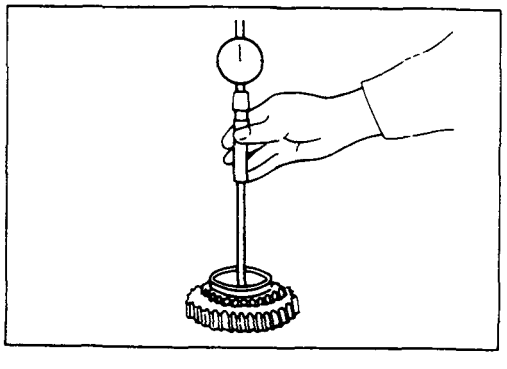

GEAR INSIDE DIAMETER

Use an inside dial indicator to measure the gear inside diameter.

If the measured value is less than the specified limit, the gear must be replaced.

Gear Inside Diameter — mm(in)

	Standard	Limit
1st 3rd	45.000-45.013 (1.771-1.772)	45.100 (1.776)
2nd	52.000-52.013 (2.047-2.048)	52.100 (2.051)
Rev. Transfer	48.000-48.013 (1.889-1.890)	48.100 (1.894)
5th	32.000-32.013 (1.259-1.260)	32.100 (1.264)

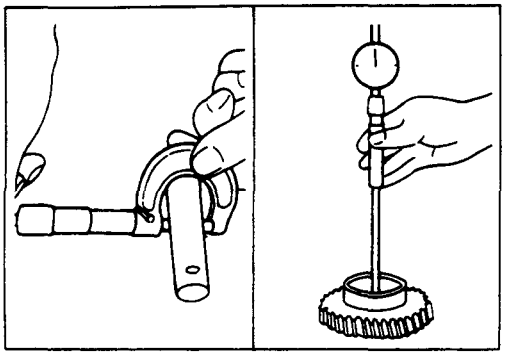

REVERSE IDLER GEAR AND IDLER GEAR SHAFT CLEARANCE

1. Use a micrometer to measure the idler gear shaft diameter.
2. Use an inside dial indicator to measure the idler gear inside diameter.
3. Calculate the idler gear and idler gear shaft clearance.

   Idler gear inside diameter – idler gear shaft diameter = idler gear and idler gear shaft clearance.

   If the measured value exceeds the specified limit, the idler gear and/or the idler gear shaft must be replaced.

Idler Gear and Idler Gear Shaft Clearance mm(in)

Standard	Limit
0.041 – 0.074 (0.0016 – 0.0029)	0.150 (0.0059)

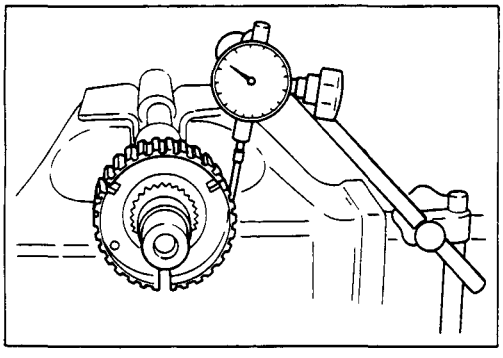

CLUTCH HUB SPLINE PLAY

1. Set a dial indicator to the clutch hub to be measured.
2. Move the clutch hub as far as possible to both the right and the left.

   Note the dial indicator reading.

   It the measured value exceeds the specified limit, the clutch hub must be replaced.

Clutch Hub Spline Play mm(in)

	Standard	Limit
1st—2nd 3rd—4th Transfer 4×2/4×4 High/Low	0 — 0.1 (0 — 0.0039)	0.2 (0.0079)
Rev.—5th	0 — 0.2 (0 — 0.0079)	0.3 (0.0118)

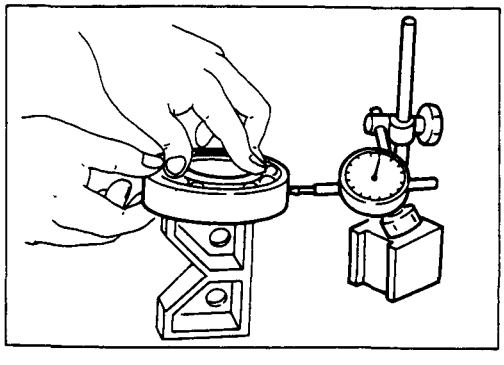

BALL BEARING PLAY

Use a dial indicator to measure the ball bearing play.

Ball Bearing Play mm(in)

Limit
0.2 (0.0079)

FRONT COVER OIL SEAL

Oil Seal Replacement

Oil Seal Removal

Use a screwdriver to pry the oil seal from the front cover.

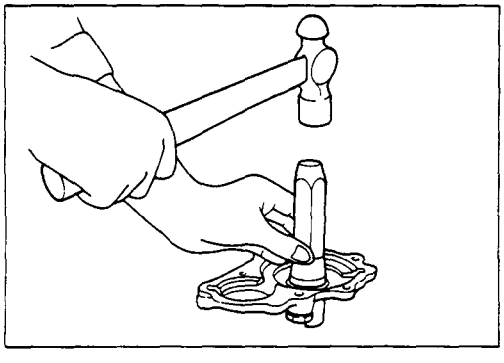

Oil Seal Installation

1. Use the oil seal installer to install the oil seal to the front cover.

   Oil Seal Installer : 5-8840-0026-0 (J-26540)
2. Apply gear oil to the oil seal lip.

REAR COVER OIL SEAL

Oil Seal Replacement

Oil Seal Removal

Use a screwdriver to pry the oil seal from the rear cover.

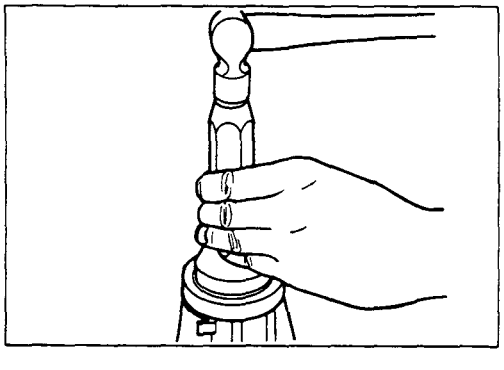

Oil Seal Installation

1. Use the oil seal installer to install the oil seal to the rear cover.

   Oil Seal Installer : 5-8522-0050 (J-29769)
2. Apply engine oil to the oil seal lip.

TRANSFER CASE MAINSHAFT OIL SEAL

Oil Seal Replacement

Oil Seal Removal

Use a screwdriver to pry the oil seal from the transfer case.

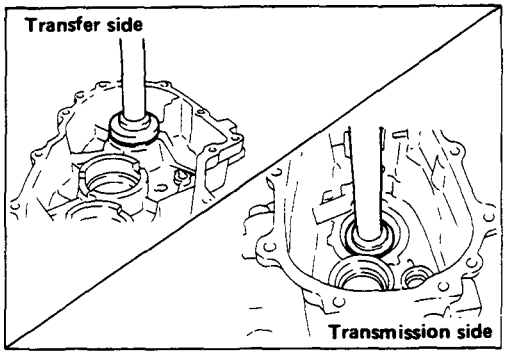

Oil Seal Installation

1. Use the oil seal installer to install the oil seal to the transfer case.

   Oil Seal Installer : 5-8840-2193-0 (J-37488)
   Drive Handle : 5-8840-0007-0 (J-8092)

2. Apply engine oil to the oil seal lip.

TRANSFER CASE FRONT OUTPUT SHAFT OIL SEAL

Oil Seal Replacement

Oil Seal Removal

Use a screwdriver to pry the oil seal from the transfer case.

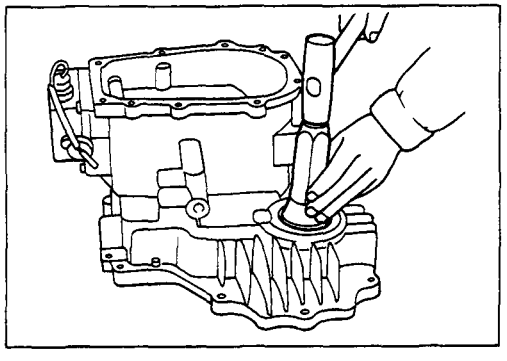

Oil Seal Installation

1. Use the oil seal installer to install the oil seal to the transfer case.

   Oil Seal Installer : 5-8840-2161-0 (J-37226)

2. Apply engine oil to the oil seal lip.

REASSEMBLY

MAJOR COMPONENT (TRANSMISSION)

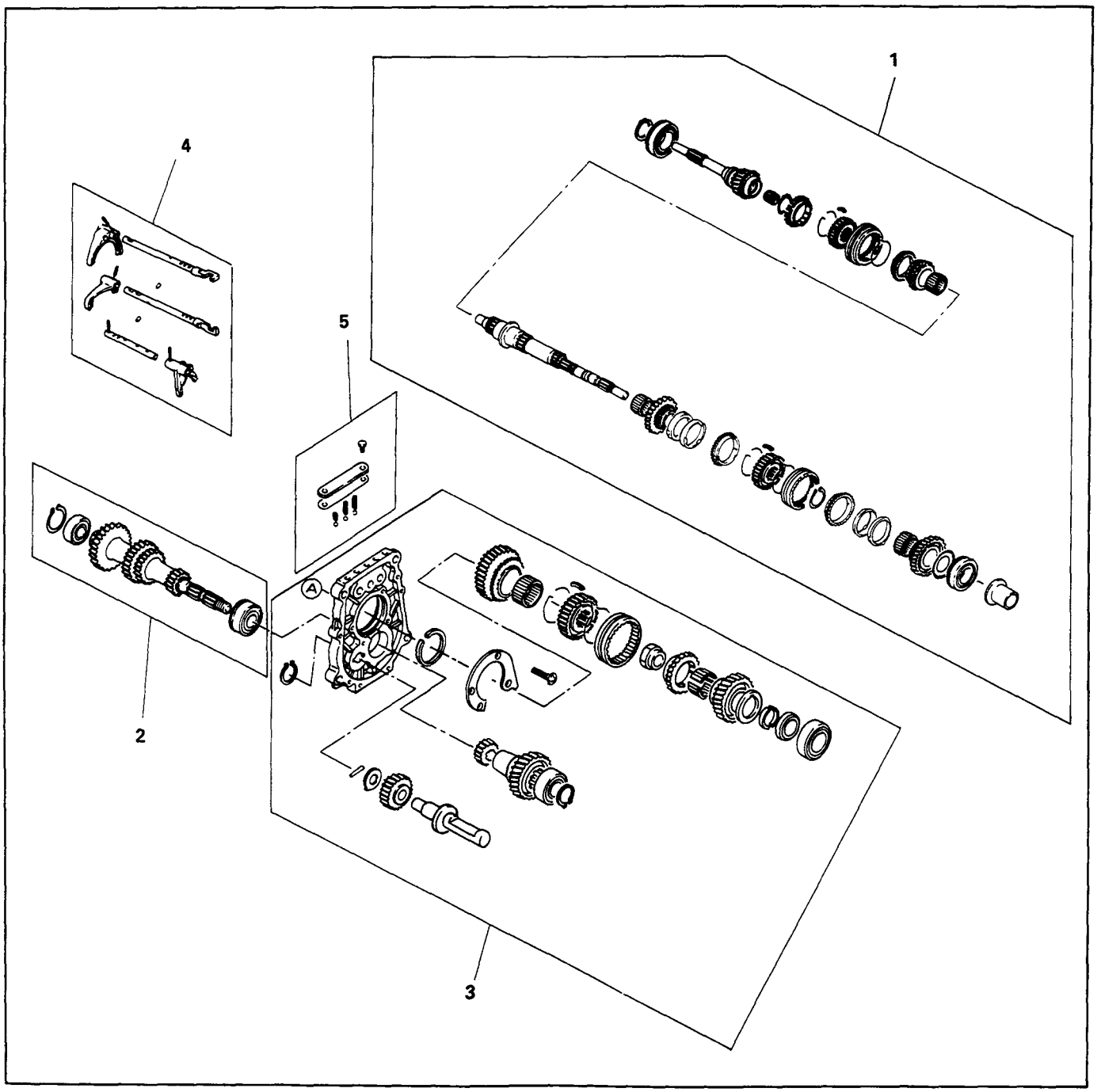

Reassembly Steps

1 Top & main gear shaft assembly
2. Counter gear shaft assembly
3. Rev. and 5th gear assembly
4. Shift arm assembly & interlock pin
5. Detent assembly

MAJOR COMPONENT (TRANSFER CASE)

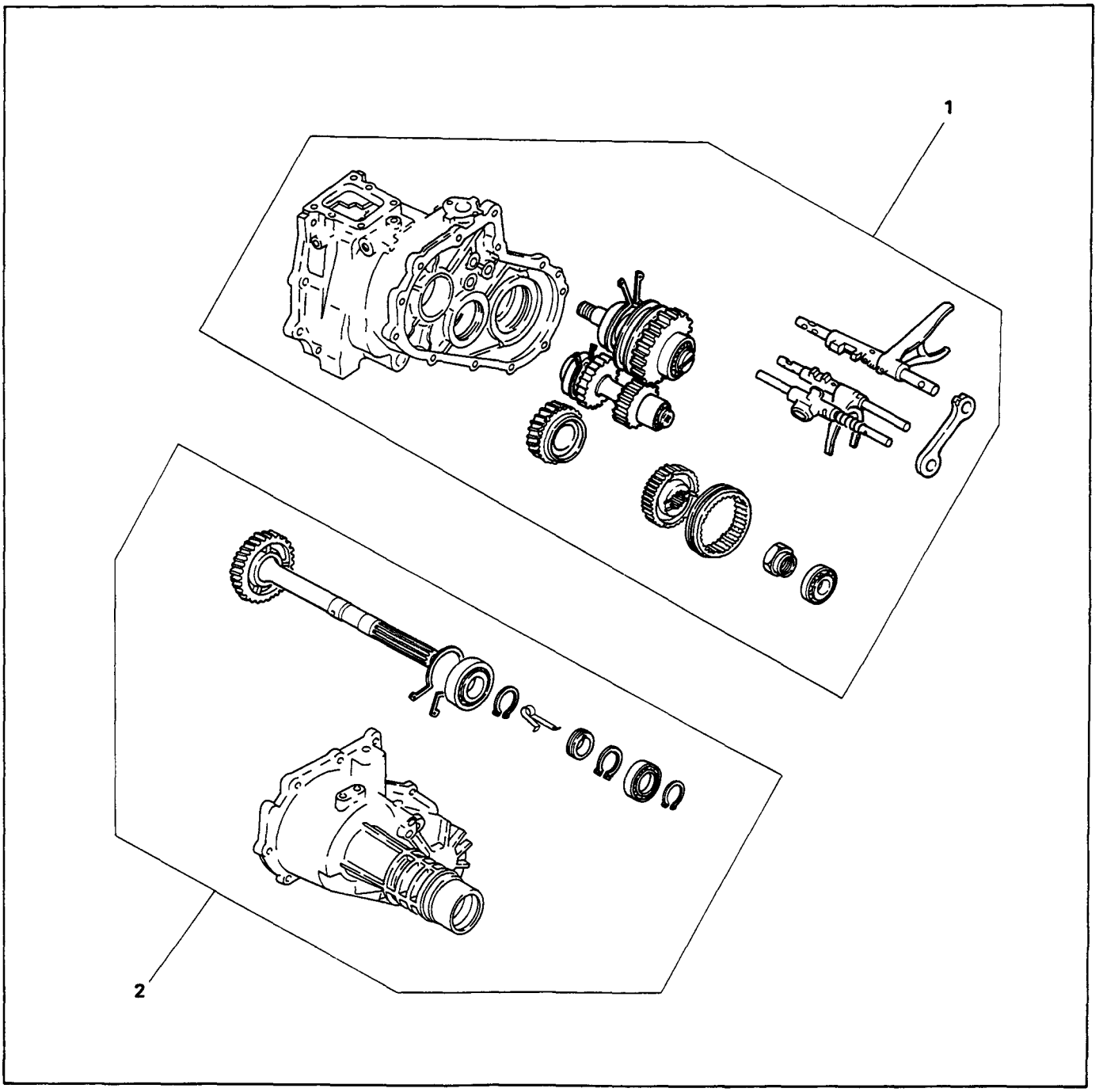

Reassembly Steps

1 Transfer case assembly
2. Transfer rear case assembly

MINOR COMPONENT (TRANSMISSION)

INTERMEDIATE PLATE AND GEAR ASSEMBLY TOP GEAR SHAFT, MAIN SHAFT GEAR AND COUNTER GEAR

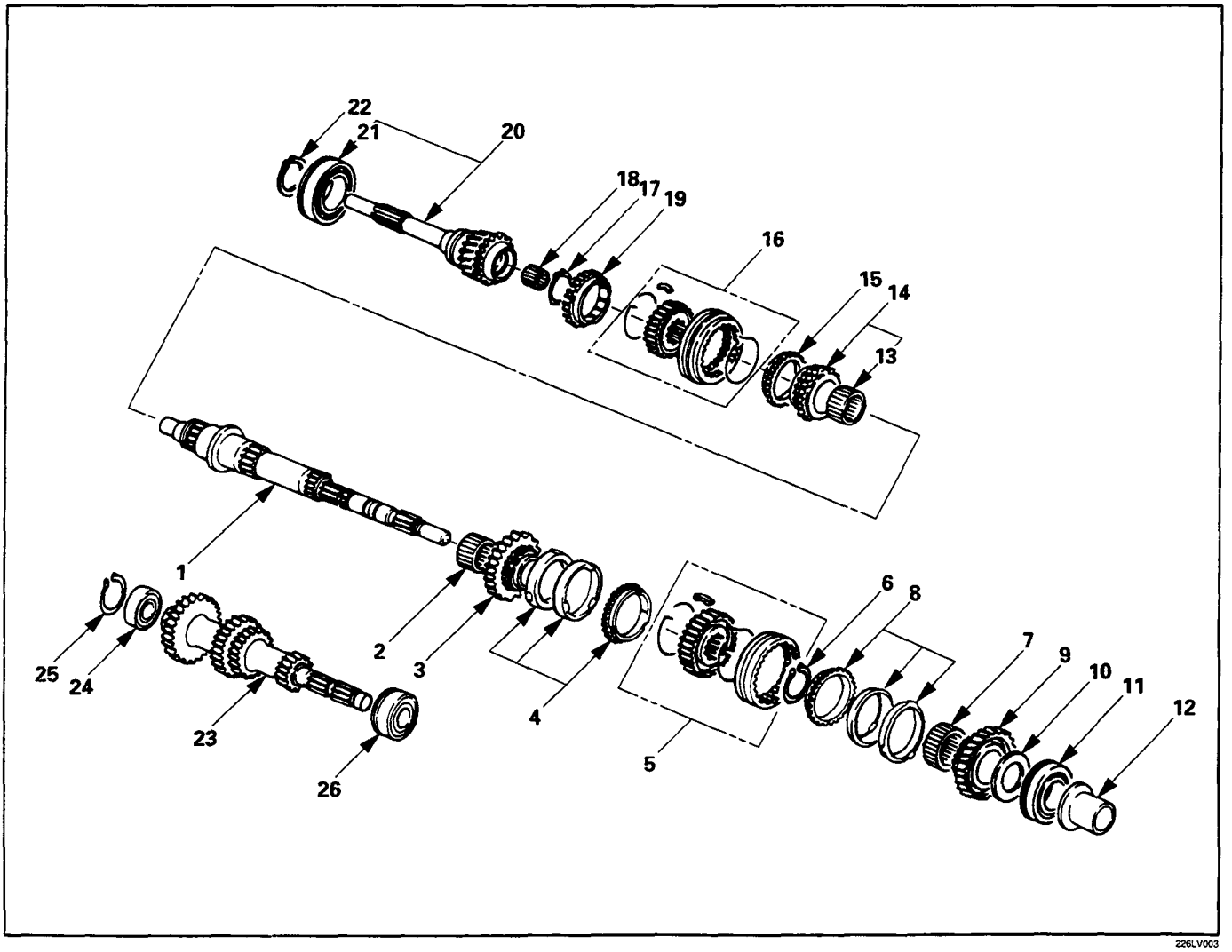

Reassembly Steps

1. Mainshaft
▲ 2. Needle bearing
▲ 3. 2nd gear
4. 2nd block ring (set)
▲ 5. 1st—2nd synchronizer assembly
▲ 6. Clutch hub snap ring
▲ 7. Needle bearing
8. 1st block ring (set)
▲ 9. 1st gear
▲ 10. 1st gear thrust bearing
▲ 11. Mainshaft ball bearing
▲ 12. Needle bearing collar
▲ 13. Needle bearing
▲ 14. 3rd gear
15. 3rd block ring
▲ 16. 3rd—4th synchronizer assembly
▲ 17. Mainshaft snap ring
18. Needle bearing
19. Top block ring
20. Top gear shaft
▲ 21. Ball bearing
▲ 22. Top gear shaft snap ring
23. Counter gear
▲ 24. Counter gear front bearing
25. Snap ring
26. Counter gear center bearing

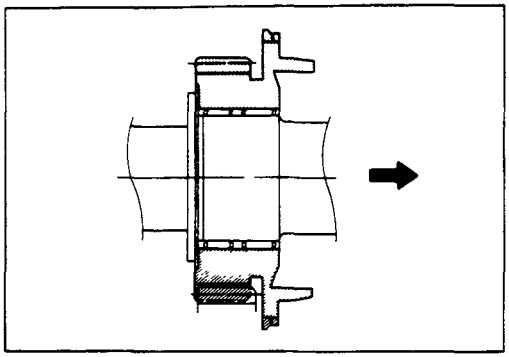

Important Operations

2. Needle Bearing

3. 2nd Gear

1) Apply engine oil to the needle bearing and the 2nd gear thrust surfaces.
2) Install the needle bearing and the 2nd gear to the mainshaft.
   The dog teeth of the 2nd gear must be facing the rear side of the transmission.

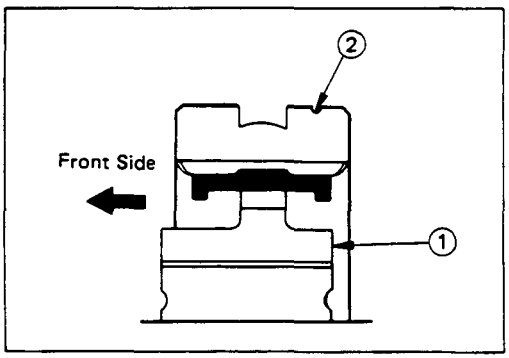

5. 1st—2nd Synchronizer Assembly

1) Turn the shallow clutch hub face ① toward the side of the sleeve with small groove ② on the outer circumference.

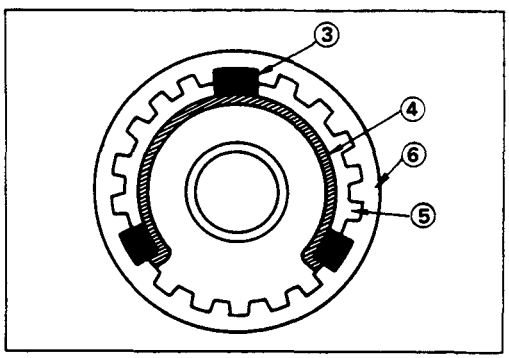

2) Check that the inserts ③ fit snugly into the block ring insert grooves.
3) Check that the insert springs ④ are fitted to the inserts as shown in the illustration.
4) Check that the clutch hub ⑤ and the sleeve ⑥ slide smoothly.
5) Install the synchronizer assembly to the mainshaft.
   The clutch hub face (with the heavy boss) must be facing the 2nd gear side.

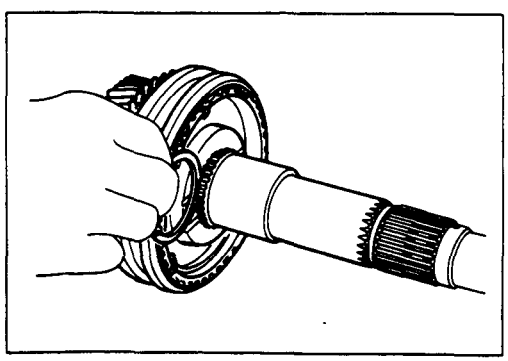

6. Clutch Hub Snap Ring

1) Select the snap ring which will provide the minimum clearance between the 1st/2nd clutch hub and the snap ring.
   There are three snap ring sizes available.
   The snap rings are color-coded to indicate their thickness.

Clutch Hub and Snap Ring Clearance	mm(in)
Standard	
0 – 0.1 (0.0039)	

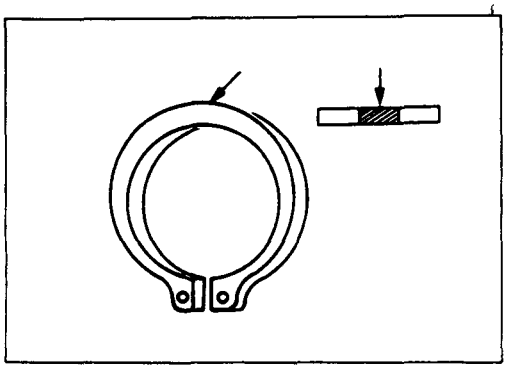

Snap Ring Avalilability

Thickness mm(in)	Color-Coding
1.80 (0.071)	White
1.85 (0.073)	Yellow
1.90 (0.075)	Blue

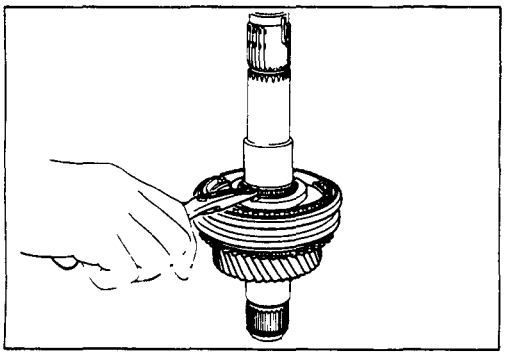

2) Use a pair of snap ring pliers to install the snap ring to the mainshaft.

The snap ring must be fully inserted into the mainshaft snap ring groove.

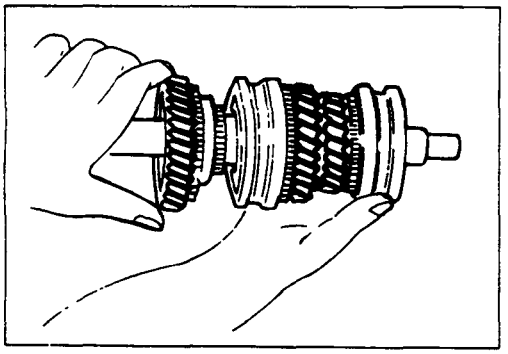

7. Needle Bearing

9. 1st Gear

1) Apply engine oil to the needle bearing and the 1st gear thrust surfaces.
2) Install the needle bearing and the 1st gear to the mainshaft.

The 1st gear dog teeth must be facing the transmission front side.

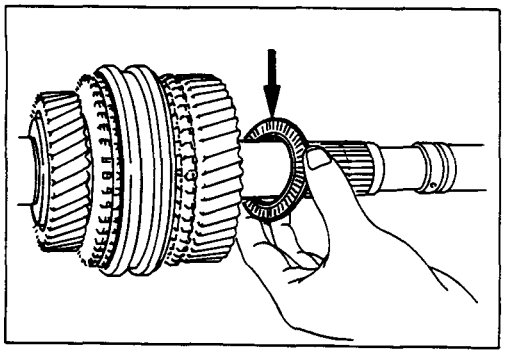

10. 1st Gear Thrust Bearing

Install the thrust bearing to the mainshaft.

The thrust bearing side must be facing the transmission front side.

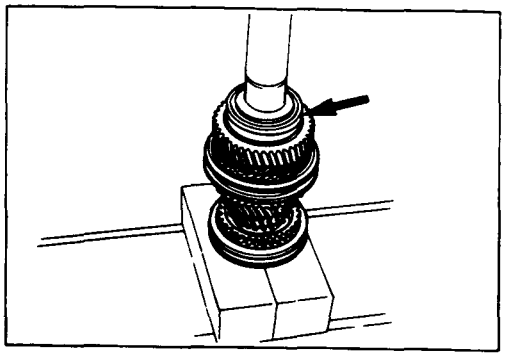

11. Mainshaft Ball Bearing

12. Needle Bearing Collar

1) Apply engine oil to the ball bearing and the mainshaft.
2) Install the ball bearing and collar to the mainshaft. The ball bearing snap ring groove must be facing the transmission rear side.
3) Use a bench press to slowly force the collar into place.

Installer: 5-8840-2195-0 (J-6133-01)

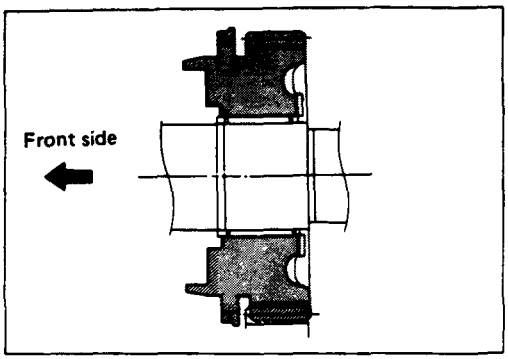

13. Needle Bearing

14. 3rd Gear

1) Apply engine oil to the needle bearing and the 3rd gear thrust surfaces.
2) Install the needle bearing and the 3rd gear to the mainshaft.

   The dog teeth of the 3rd gear must be facing the front side of the transmission.

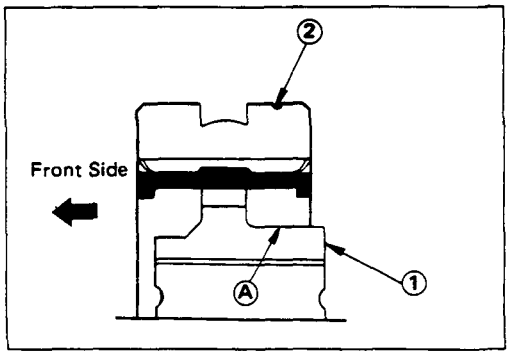

16. 3rd—4th Synchronizer Assembly

1) Turn the clutch hub face ① with the heavy boss Ⓐ toward the side of the sleeve with small groove ② on the outer circumference.

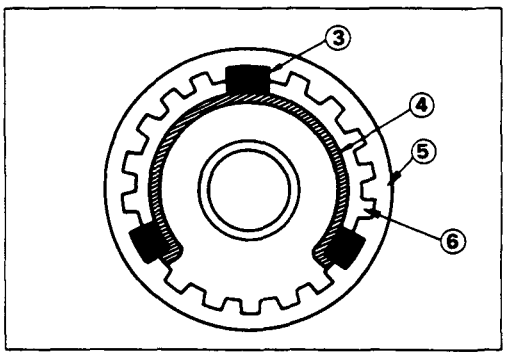

2) Check that the inserts ③ fit snugly into the block ring insert grooves.
3) Check that the insert springs ④ are fitted to the inserts as shown in the illustration.
4) Check that the clutch hub ⑤ and the sleeve ⑥ slide smoothly.
5) Install the synchronizer assembly to the mainshaft.

   The clutch hub face (with the heavy boss) must be facing the 3rd gear side.

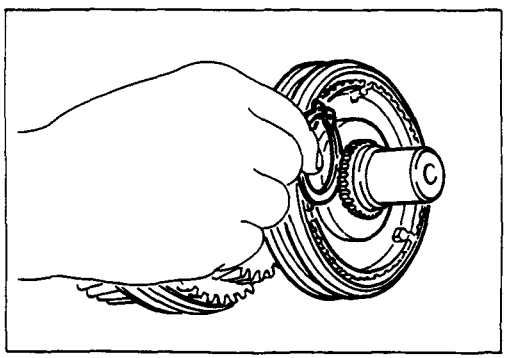

17. Mainshaft Snap Ring

1) Select the snap ring which will provide the minimum clearance between the 3rd—4th clutch hub and the snap ring.

   There are three snap ring sizes available.

   The snap rings are color-coded to indicate their thickness.

Clutch Hub and Snap Ring Clearance	mm(in)
Standard	
0 – 0.1 (0.0039)	

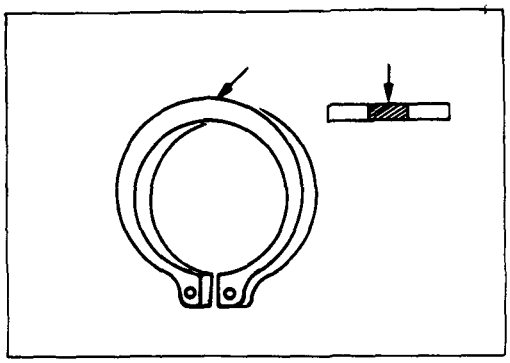

Snap Ring Availability mm(in)

Thickness	Color-Coding
1.80 (0.071)	White
1.85 (0.073)	Yellow
1.90 (0.075)	Blue

2) Use a pair of snap ring pliers to install the snap ring to the mainshaft.
3) The snap ring must be fully inserted into the mainshaft snap ring groove.

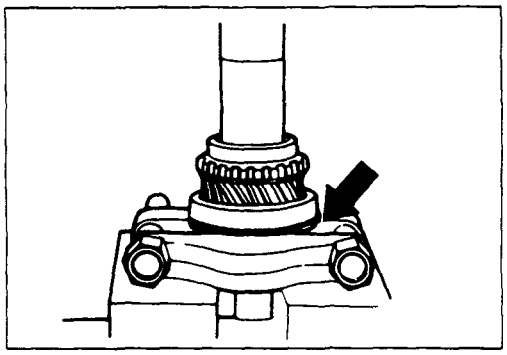

21. Ball Bearing

22. Top Gear Shaft Snap Ring

1) Use a bench press to install the top gear shaft ball bearing to the mainshaft.

   The snap ring groove must be facing the transmission front side.
2) Use a pair of snap ring pliers to install the snap ring to the bearing.

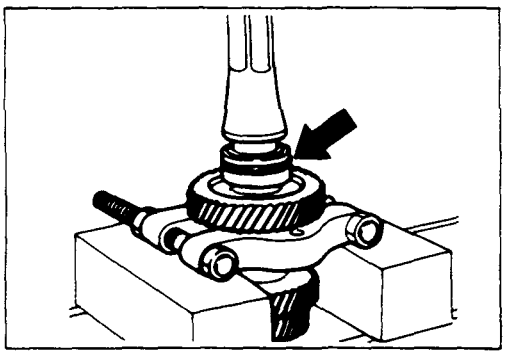

24. Counter Gear Front Bearing

Use a bench press to install the counter gear front ball bearing to the mainshaft.

The snap ring groove must be facing the transmission front side.

Bearing installer : 5-8840-2194-0 (J-35283)

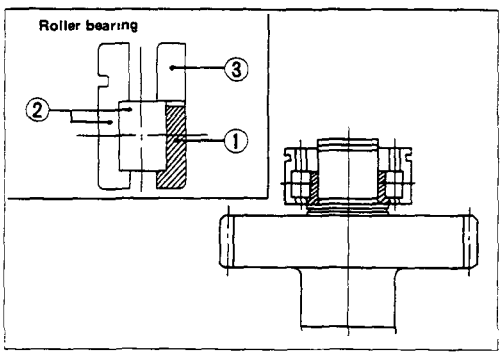

1) Apply engine oil to the bearing and install the inner race ① and outer race with roller ② in the proper direction to the mainshaft.
2) Then install the inner race ③ with taper side turned to outer race ②.

Note:
The inner race ③ should be installed with stamp on die face side turned to the front side of transmission.

REVERSE GEAR AND 5TH GEAR

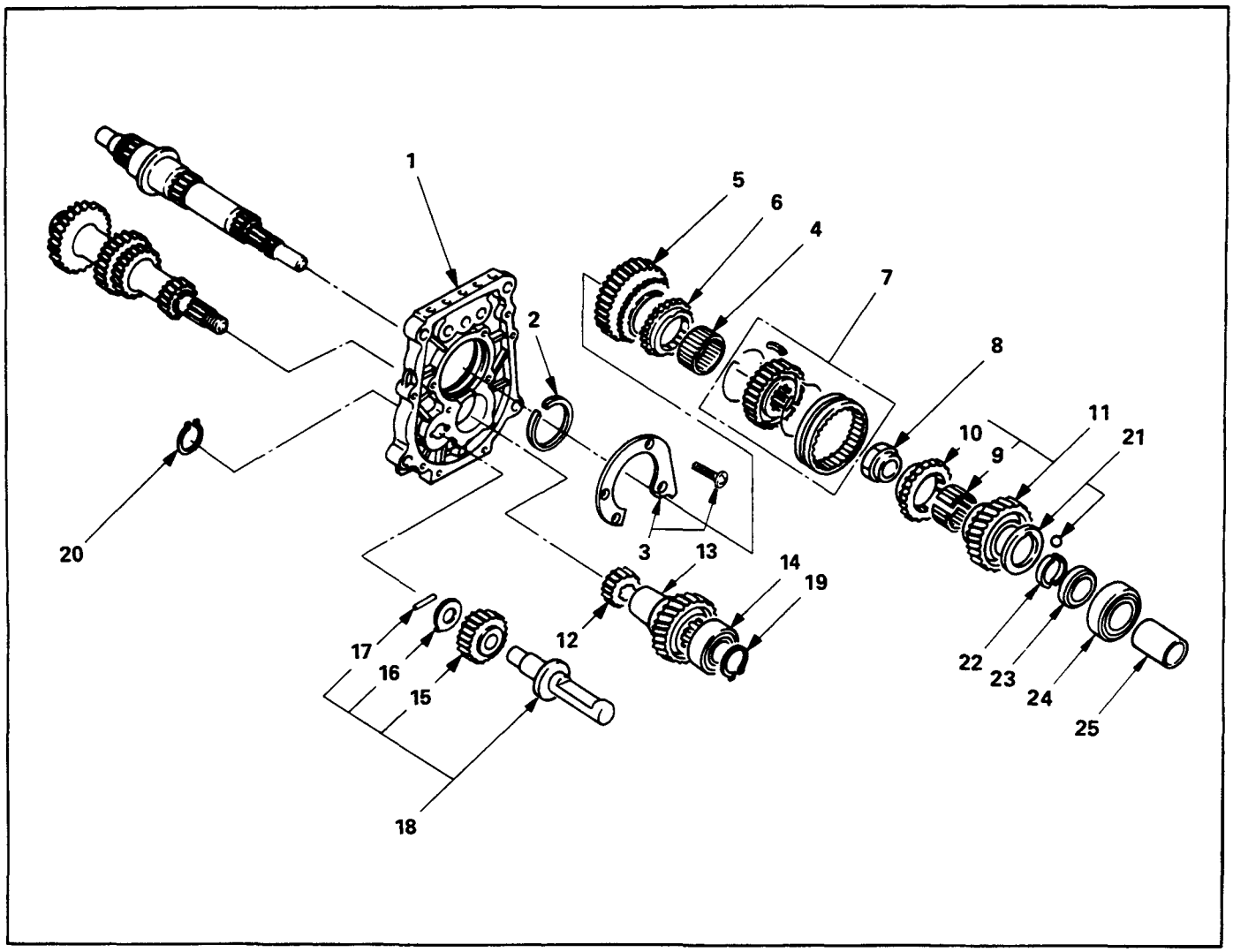

Reassembly Steps

- ▲ 1. Intermediate plate
- 2. Bearing snap ring
- ▲ 3. Bearing plate and screw
- 4. Needle bearing
- 5. Mainshaft reverse gear
- 6. Reverse block ring
- ▲ 7. Rev.-5th synchronizer assembly
- ▲ 8. Clutch hub nut
- 9. Needle bearing
- 10. 5th block ring
- 11. 5th gear
- ▲ 12. Counter reverse gear
- 13. Counter 5th gear
- 14. Ball bearing
- 15. Reverse idler gear
- 16. Thrust washer
- 17. Idler shaft pin
- 18. Reverse idler shaft
- ▲ 19. Bearing snap ring
- ▲ 20. Reverse gear snap ring
- ▲ 21. Thrust washer and lock ball
- 22. Thrust plate
- 23. Retainer
- ▲ 24. Roller bearing
- 25. Oil seal collar

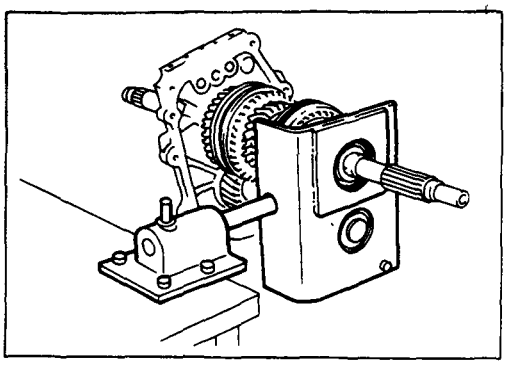

Important Operations

1. Intermediate Plate

1) Mesh the counter gear with the mainshaft assembly.
2) Install the holding fixture to the mainshaft and the counter gear.

   Holding Fixture : 5-8840-2160-0 (J-37224)

   Holding base : 5-8840-0003-0 (J-3289-20)
3) Place the holding fixture (with the mainshaft and the counter shaft) in a vise.
4) Install the intermediate plate.

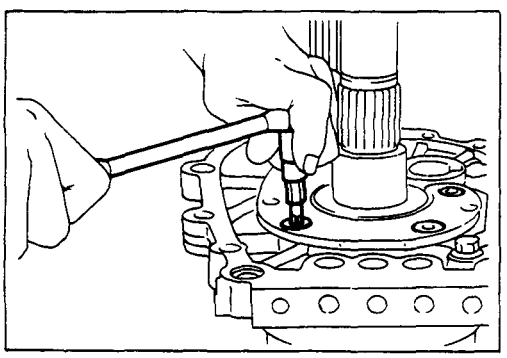

3. Bearing Plate and Screw

1) Apply recommended thread locking agents or its equivalent to each of the plate screw threads.
2) Use the wrench to tighten the screws to the specified torque.

   Torx Bit Wrench : 5-8840-0047-0 (J-37225) (T45)

Plate Screw Torque	kg·m (lb·ft/N·m)
	1.45 ± 0.35 (10.5 ± 2.5/14.2 ± 3.4)

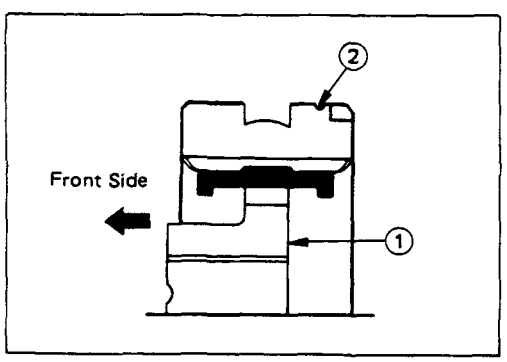

7. Rev.—5th Synchronizer Assembly

1) Turn the clutch hub face ① toward the side of the sleeve with small groove ② on the outer circumference.

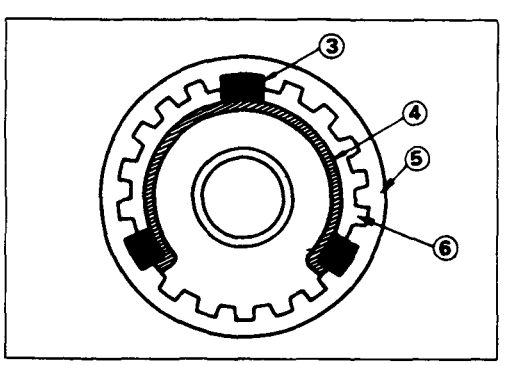

2) Check that the inserts ③ fit snugly into the block ring insert grooves.
3) Check that the insert springs ④ are fitted to the inserts as shown in the illustration.
4) Check that the clutch hub ⑤ and the sleeve ⑥ slide smoothly.
5) Install the synchronizer assembly to the mainshaft.

   The clutch hub face (with the heavy boss) must be facing the reverse gear side.

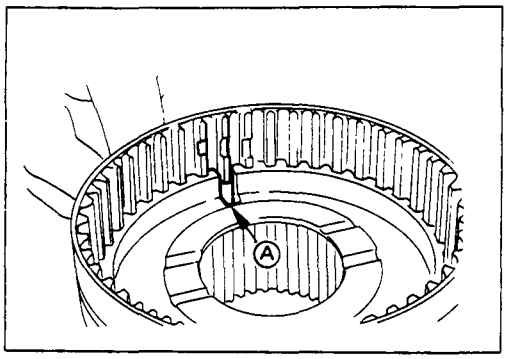

Note:
The clutch hub groove Ⓐ must be aligned with the key groove of sleeve.

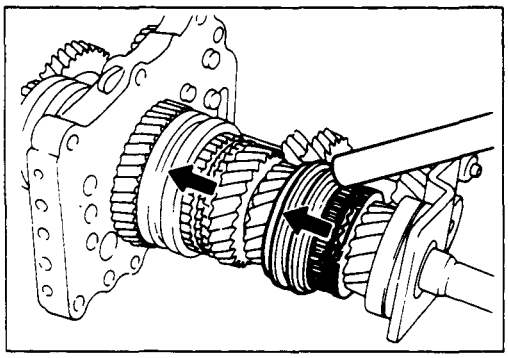

8. Clutch Hub Nut

1) Mesh the 1st—2nd synchronizer with both the 1st and 3rd gears (double engagement).
   This will prevent the mainshaft from turning.

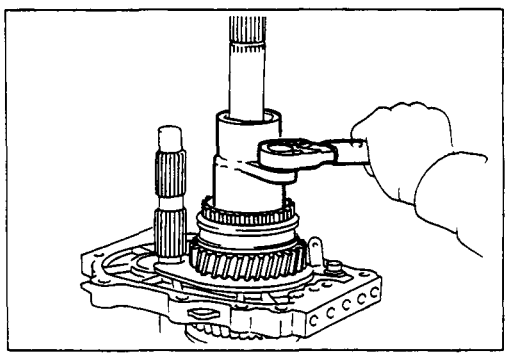

2) Install the mainshaft lock nut.
3) Use the lock nut wrench to tighten the lock nut to the specified torque.
   Wrench: 5-8840-2156-0 (J-37219)

Hub Nut Torque	kg·m(lb.ft/N·m)
13 ± 1 (94.0 ± 7.2/127.4 ± 9.8)	

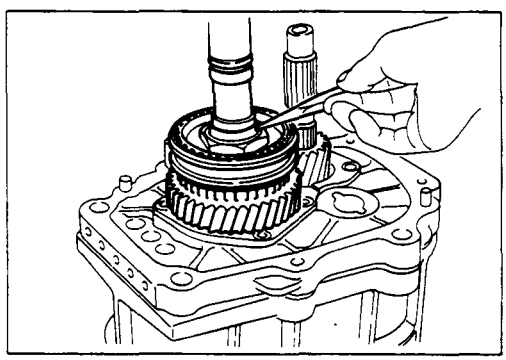

4) Use a punch to stake the lock nut.

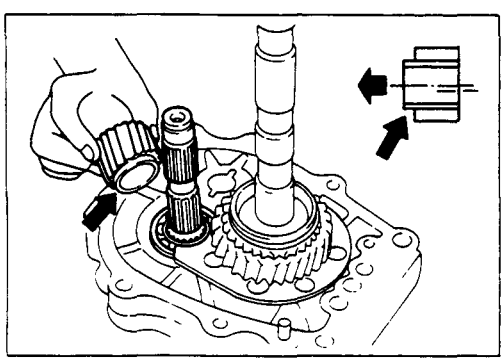

12. Counter Reverse Gear

1) Apply engine oil to the counter reverse gear and the reverse gear.
2) Install the counter reverse gear to the counter gear.
   The reverse gear projection must be facing the side of the intermediate plate.

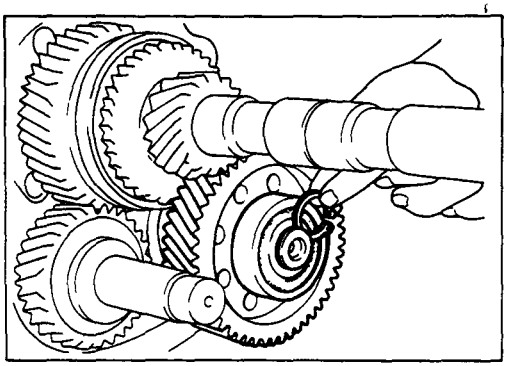

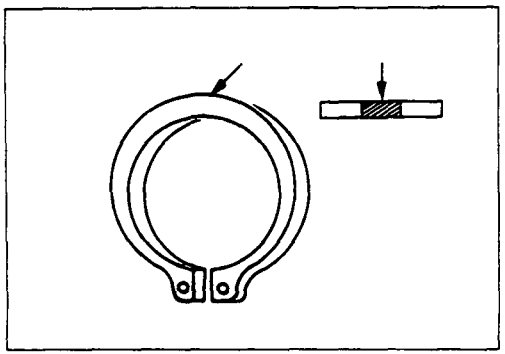

19. Bearing Snap Ring

1) Select the snap ring which will provide the minimum clearnance between the ball bearing and the snap ring.

   There are six snap ring sizes available.

   The snap rings are color-coded to to indicate their thickness.

Ball Bearing and Snap Ring Clearance mm(in)

Standard	0 – 0.15 (0 – 0.0059)

Snap Ring Availability mm(in)

Thickness mm(in)	Color-Coding
1.1 (0.043)	White
1.2 (0.047)	Yellow
1.3 (0.051)	Blue
1.4 (0.055)	Pink
1.5 (0.059)	Green
1.6 (0.063)	Brown

2) Use a pair of snap ring pliers to install the snap ring to the mainshaft.
   The snap ring must be fully inserted into the counter 5th gear snap ring groove.

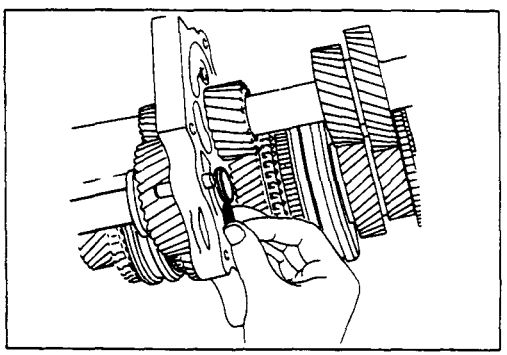

20. Reverse Gear Snap Ring

1) Select the snap ring which will provide the minimum clearance between the intermediate plate and the snap ring.
   There are three snap ring sizes available.
   The snap rings are color-coded to indicate their thickness.

Intermediate Plate and Snap Ring Clearance mm(in)

Standard	0 – 0.15 (0 – 0.0059)

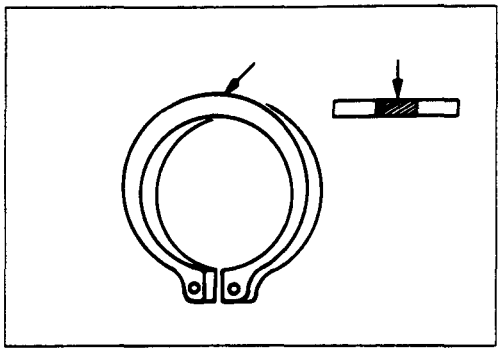

Snap Ring Availability mm(in)

Thickness mm(in)	Color-Coding
1.2 (0.047)	White
1.3 (0.051)	Yellow
1.4 (0.055)	Blue

2) Use a pair of snap ring pliers to install the snap ring to the mainshaft.
The snap ring must be fully inserted into the counter 5th gear snap ring groove.

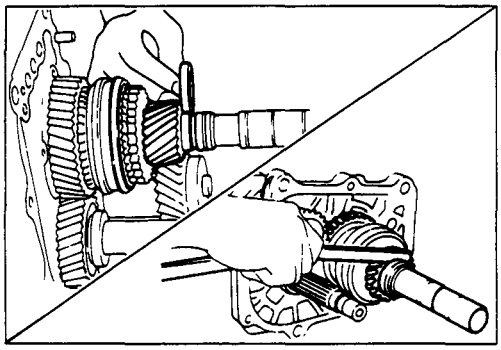

21. Thrust Washer and Lock Ball

1) Use a thickness gauge to measure the clearance between the 5th gear and the thrust washer.

5th Gear and Thrust Washer Clearance mm(in)

Standard
0.10 – 0.25 (0.0039 – 0.0098)

If required, replace the exsisting thrust washer with a new thrust washer to bring the clearance to specification.

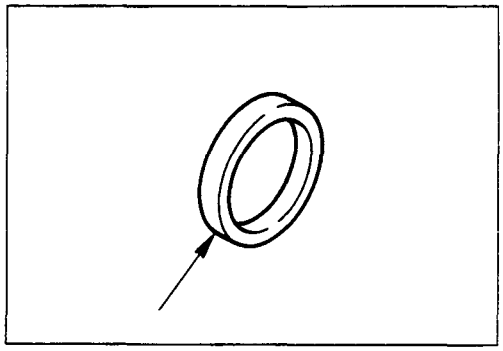

There are four thrust washer sizes available.

The snap rings are color-coded to indicate their thickness.

Thrust Washer Availability mm(in)

Thickness	Color-Coding
7.9 (0.311)	White
8.0 (0.315)	Yellow
8.1 (0.319)	Green
8.2 (0.323)	Blue

2) Apply grease to the thrust washer and the lock ball.
3) Install the thrust washer and the lock ball to the mainshaft.

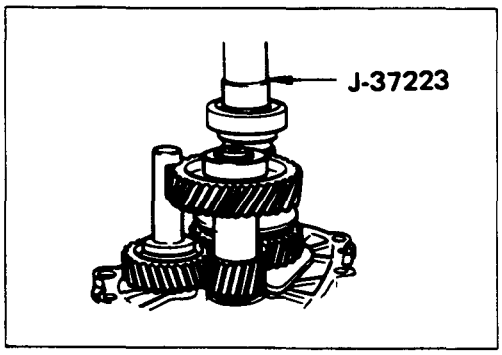

24. Roller Bearing

Apply engine oil to the bearing inner and outer circumference.

Use the installer to install the roller bearing to the mainshaft.

Installer : 5-8840-2159-0 (J-37223)

Note:

Be sure the bearing is installed in the direction it was removed from.

DETENT, SHIFT ARM ASSEMBLY AND INTERLOCK PIN

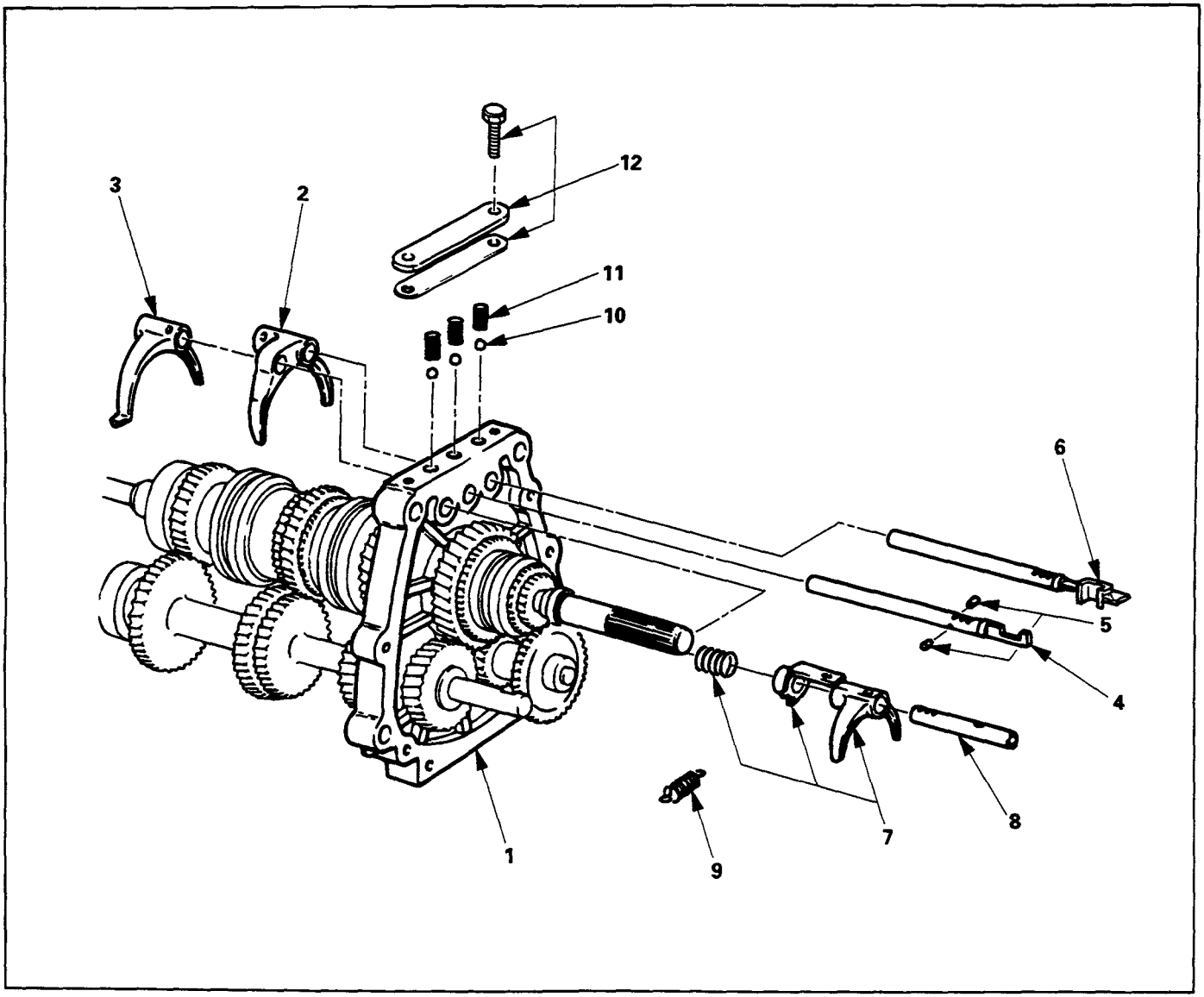

220LV001

Reassembly Steps

1. Intermediate plate and gear assembly
▲ 2. 1st—2nd shift arm
▲ 3. 3rd—4th shift arm
▲ 4. 3rd—4th shift rod
▲ 5. Interlock pin
6. 1st—2nd shift rod
7. Rev.—5th shift arm and inhibiter
8. Rev.—5th shift rod
9. Spring
10. Detent ball
11. Detent spring
▲ 12. Detent spring plate and gasket

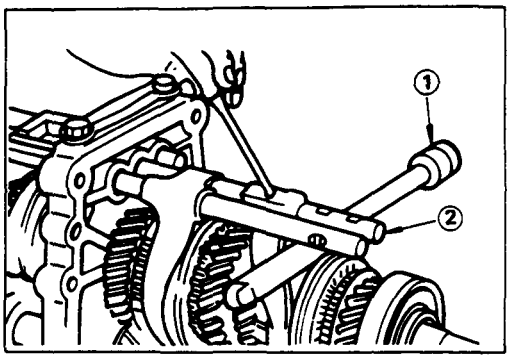

Important Operations

2. 1st—2nd Shift Arm

3. 3rd—4th Shift Arm

Hold a round bar ① against the shift rod end lower face ② to protect it against damage.

Install the new spring pin.

Never reinstall the used spring pin.

4. 3rd—4th Shift Rod

5. Interlock pin

1) Install the interlock pin to the shift rod.
2) Install the shift rod together with the interlock pin to the intermediate plate.

   Do not allow the interlock pin to fall from the shift rod.

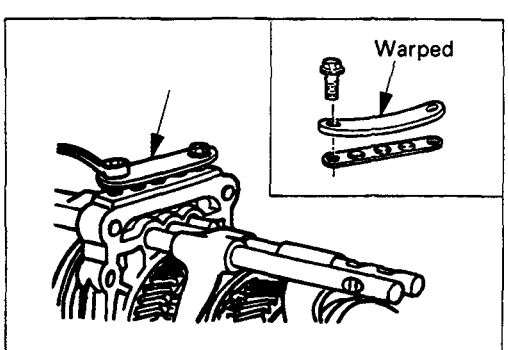

12. Detent Spring Plate and Gasket

1) Install the new-detent plate and new gasket onto the transmisson case into the correct direction.
2) Tighten the detent spring plate bolts to specified torque.

Detent Spring Plate Bolt Torque	kg·m(lb.ft/N·m)
	1.5 (10.8/14.7)

MINOR COMPONENT

TRANSFER CASE ASSEMBLY

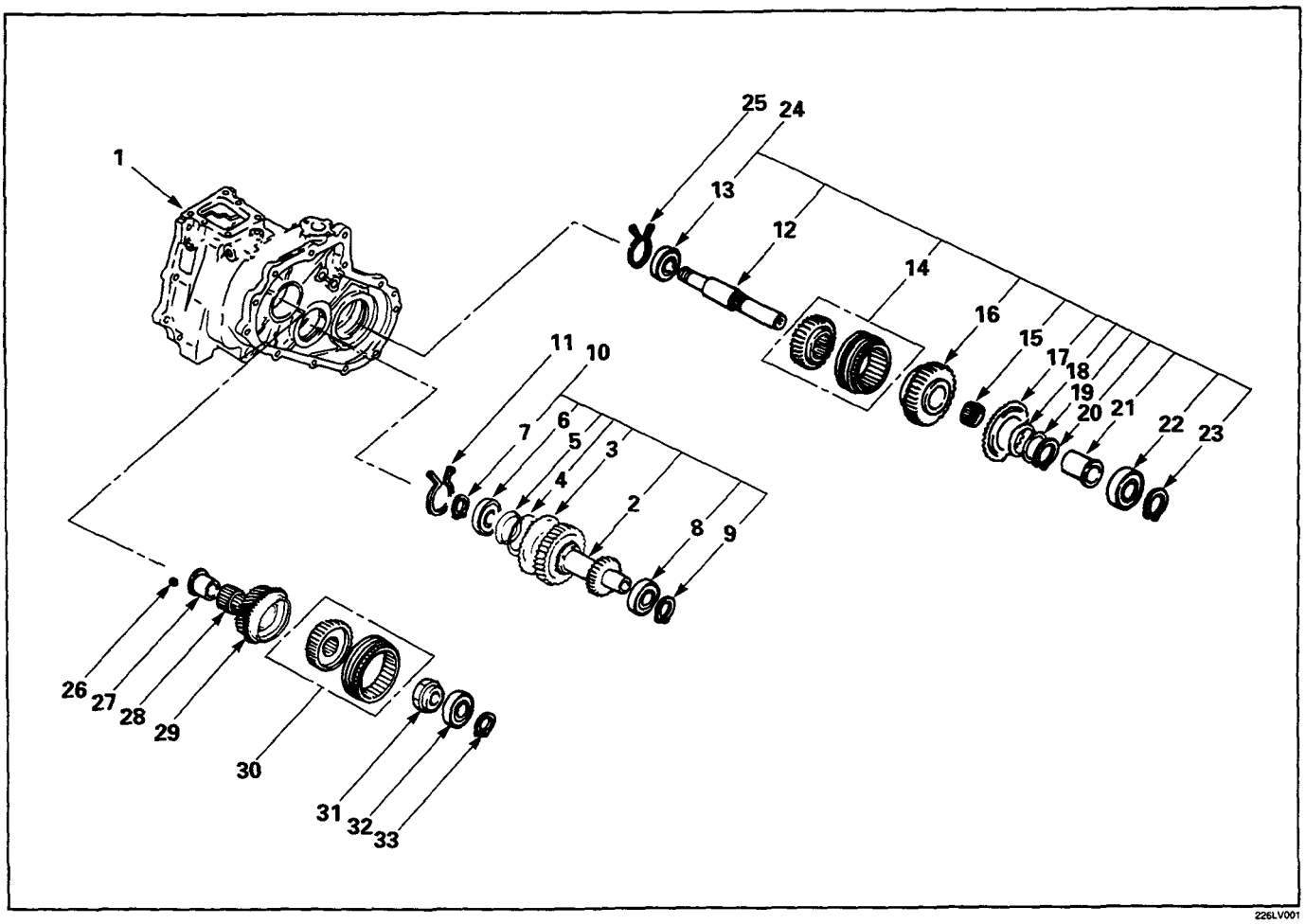

Reassembly Steps

- ▲ 1. Transfer case
- ▲ 2. Counter gear
- ▲ 3. Sub gear (Anti-lash plate)
- 4. Belleville spring
- 5. Spacer
- 6. Ball bearing
- ▲ 7. Snap ring
- 8. Ball bearing
- 9. Snap ring
- 10. Counter gear assembly
- 11. Bearing snap ring
- 12. Front output shaft
- 13. Ball bearing
- 14. Clutch hub and sleeve
- 15. Needle bearing
- ▲ 16. Front output gear
- ▲ 17. Sub gear (Anti-lash plate)
- ▲ 18. Belleville spring
- ▲ 19. Spacer
- ▲ 20. Anti-lash plate snap ring
- ▲ 21. Bearing collar
- 22. Ball bearing
- ▲ 23. Snap ring
- 24. Front output gear assembly
- 25. Bearing snap ring
- 26. Ball
- 27. Bearing collar
- 28. Needle bearing
- 29. Transfer input gear
- ▲ 30. High-low clutch hub and sleeve
- ▲ 31. Mainshaft end lock nut
- ▲ 32. Ball bearing
- 33. Snap ring

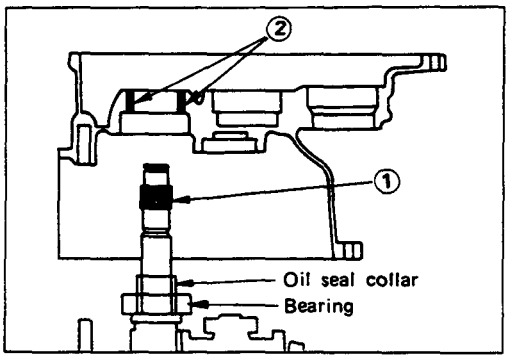

Important Operations

1. Transfer Case

1) Cover the shaft spline with adhesive tape ①.
   This will prevent damage to the oil seal lip ②.

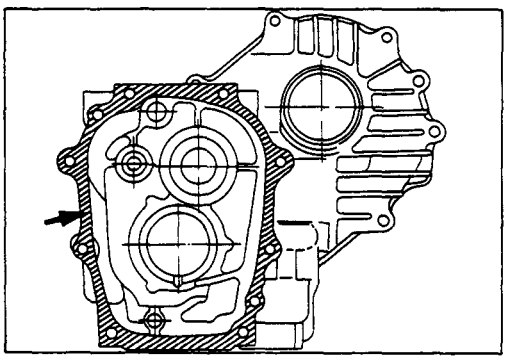

2) Apply recommend liquid gasket or its equivalent to the transfer case fitting surfaces.
3) Tighten the transfer case bolts to the specified torque a little at a time.

Transfer Case Bolt Torque	kg·m (lb·ft/N·m)
3.8 ± 0.8 (27.5 ± 5.8/39.2 ± 7.8)	

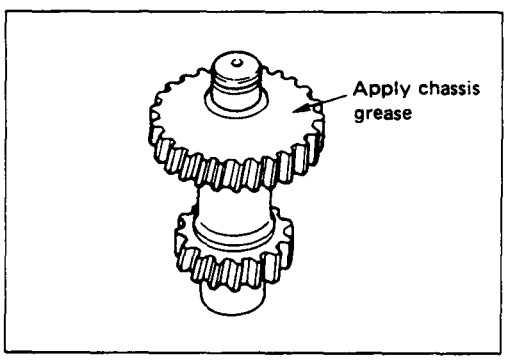

2. Counter Gear

3. Sub Gear (Anti-lash Plate)

Apply chassis grease to the sub-gear and the counter gear thrust surfaces.

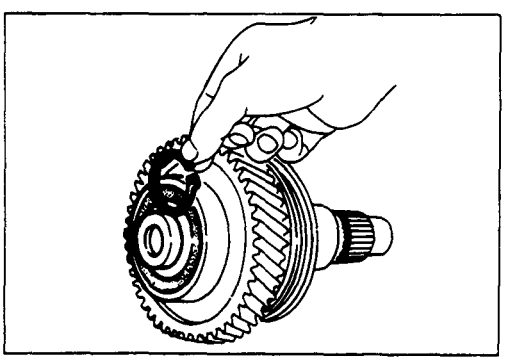

7. Snap Ring

1) Select a snap ring that will allow the minimum axial play.
2) Use a pair of snap ring pliers to install the snap ring to the counter gear.

Bearing and Snap Ring Clearance	mm(in)
Standard	
0 – 0.1 (0 – 0.0039)	

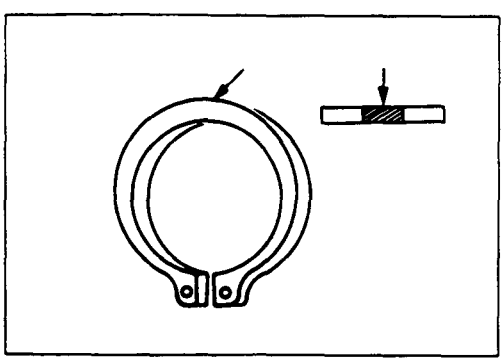

Snap Ring Availability	mm(in)
Thickness	Color-Coding
1.50 (0.059)	White
1.55 (0.061)	Yellow
1.60 (0.063)	Blue

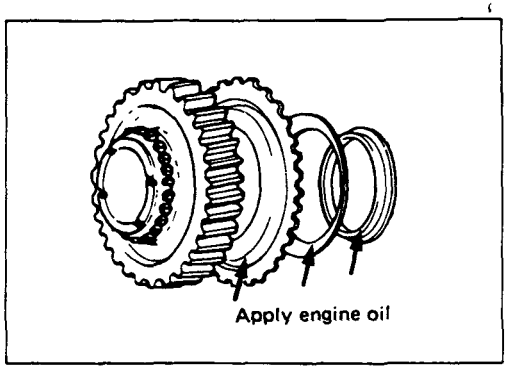

16. Front Output Gear

17. Sub Gear (Anti-lash Plate)

18. Belleville Spring

19. Spacer

Apply engine oil to the thrust surfaces of the sub-gear, the belleville spring, and the spacer.

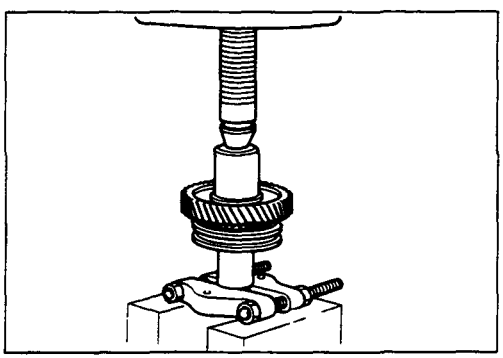

20. Anti-lash Plate Snap Ring

21. Bearing Collar

Use a bench press to install the needle bearing and collar together with the front output gear.

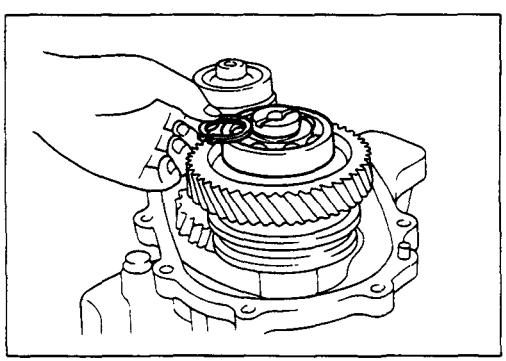

23. Snap Ring

1) Select a snap ring that will allow the minimum axial play.
2) Use a pair of snap ring pliers to install the snap ring to the output shaft.

Bearing and Snap Ring Clearance — mm(in)

Standard
0 – 0.1 (0 – 0.0039)

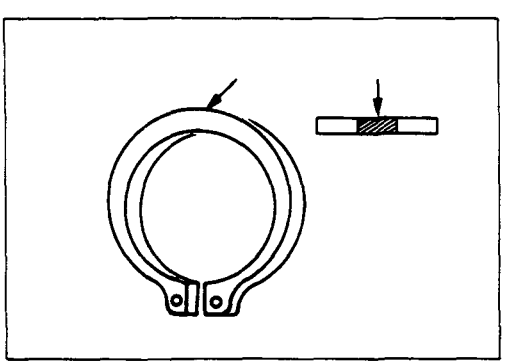

Snap Ring Availability — mm(in)

Snap Ring Thickness	Color Coding
1.55 (0.061)	White
1.60 (0.063)	Yellow
1.65 (0.065)	Blue
1.70 (0.067)	Pink
1.75 (0.069)	Green
1.80 (0.071)	Brown
1.85 (0.073)	Red
1.90 (0.075)	Orange

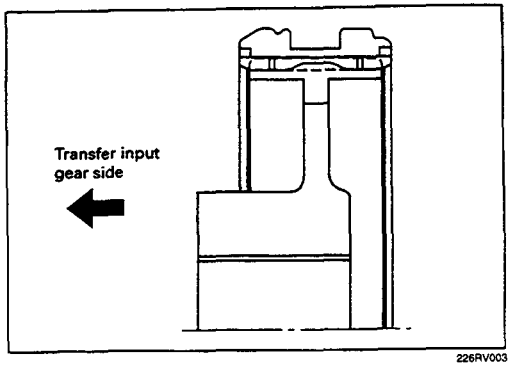

30. High-Low Clutch Hub and Sleeve

The clutch hub face with the heavy bass must be facing the transfer input gear side.

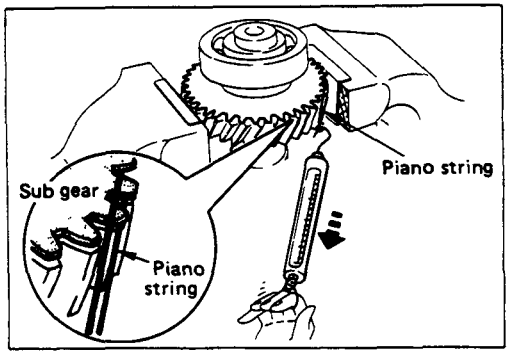

Sub Gear (Anti-lash Plate) Preload

1) Hook a length of piano wire over one of the sub-gear teeth.
2) Attach the other end of the piano wire to a spring balancer.
3) Measure the sub-gear preload.

Sub-Gear Preload	kg(lb/N)
Standard	
5 – 12 (11.0 – 26.5/49.0 – 117.6)	

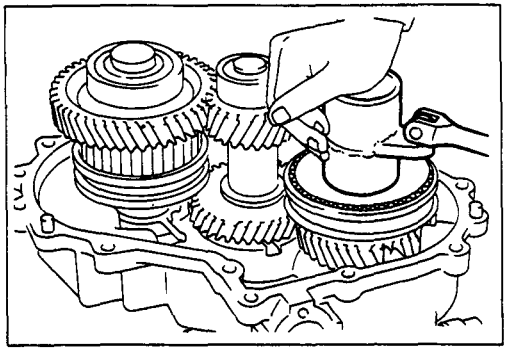

32. Mainshaft End Lock Nut

1) Use the lock nut wrench to tighten the mainshaft end lock nut to the specified torque.

   Lock Nut Wrench : J-37219

Mainshaft End Lock Nut Torque	kg·m (lb·ft/N·m)
13 ± 1 (94.0 ± 7.2/127.4 ± 9.8)	

2) Stake the lock nut.

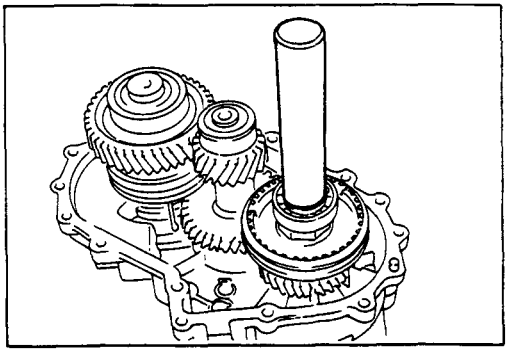

33. Ball Bearing

Use the ball bearing installer to install the ball bearing.

Installer: 5-8840-2159-0 (J-37223)

DETENT, SHIFT ARM ASSEMBLY AND INTERLOCK PIN

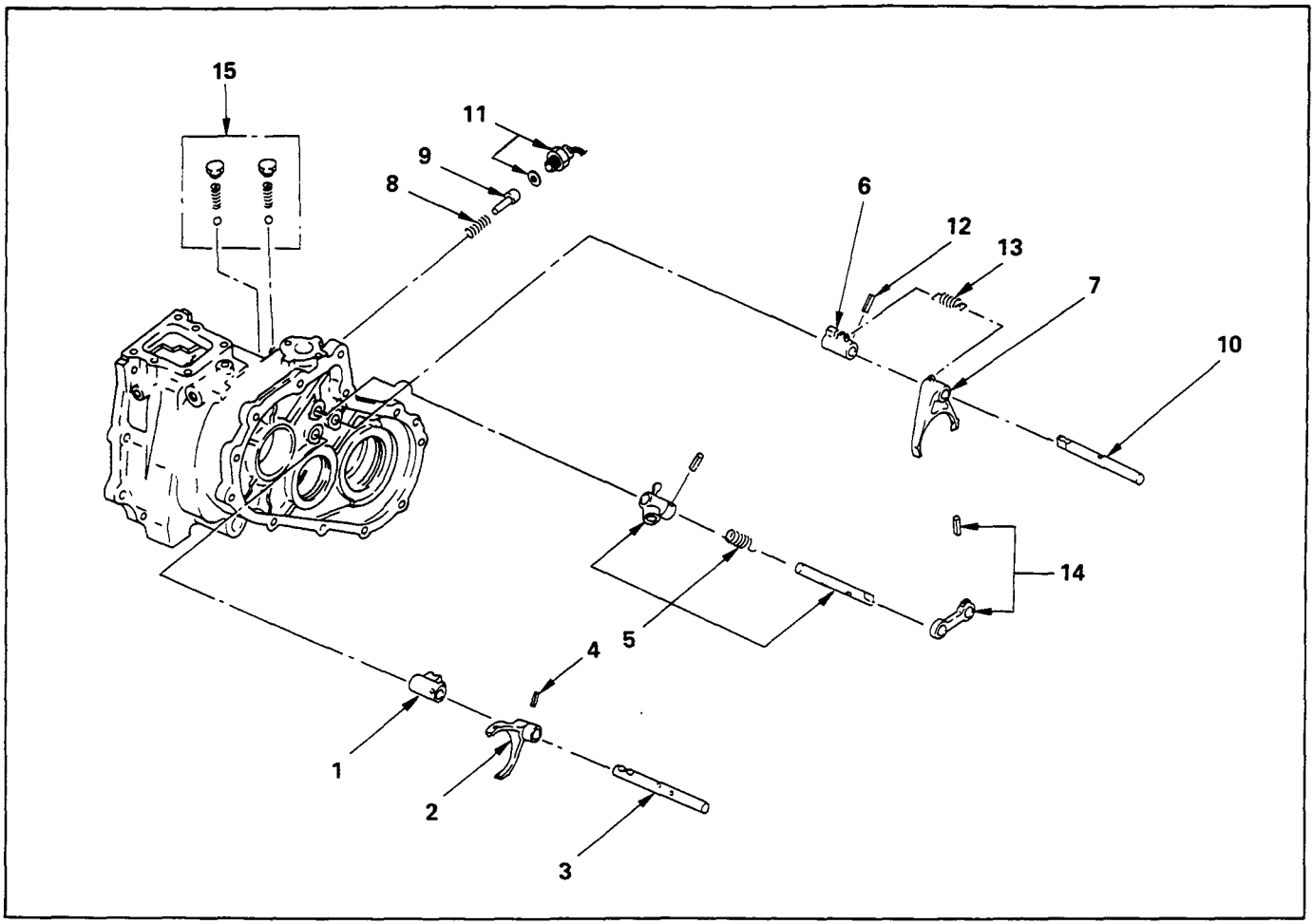

Reassembly Steps

1. Shift block
2. Shift arm
3. ▲ High-low shift rod
4. ▲ Spring pin
5. Select rod assembly
6. Shift block
7. Shift arm
8. Spring
9. ▲ Interlock pin
10. ▲ 2WD-4WD shift rod
11. ▲ 4WD indicator switch
12. ▲ Spring pin
13. Spring
14. Pin and bridge
15. ▲ Detent ball, spring and plug

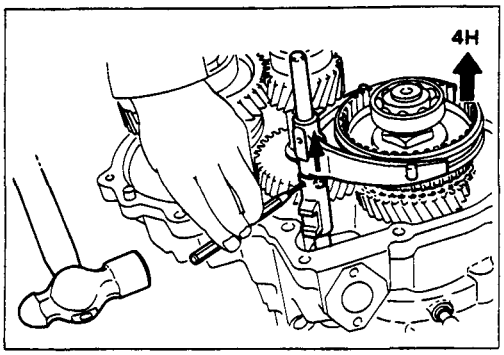

Important Operations

3. High-Low Shift Rod

4. Spring Pin

1) Engage the High-Low sleeve with 4H side.
2) Install the spring pin to the shift block.

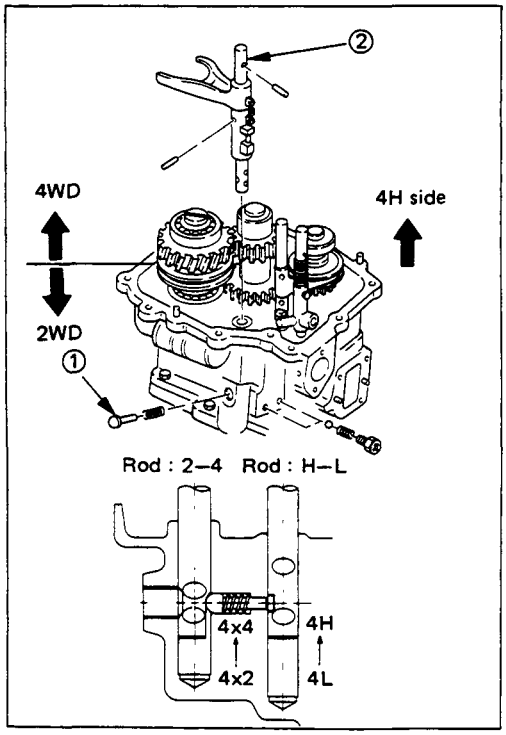

9. Interlock Pin

10. 2WD-4WD Shift Rod

1) Engage the High-Low synchronizers with 4H side and install the interlock pin 1 in proper direction.
2) Install the shift rod: 2WD-4WD 2 with the interlock pin pushed it in.

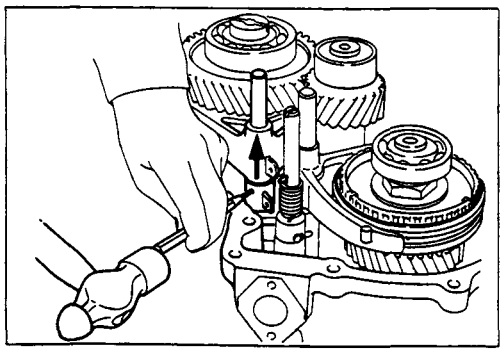

12. Spring Pin

1) Engage the 2WD-4WD sleeve with the 4WD side and install the spring pin.

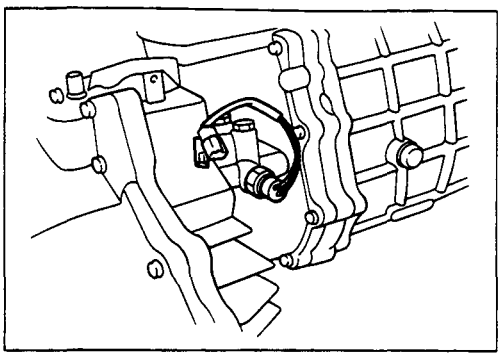

11. 4WD Indicator Switch

Tighten the switch to the specified torque.

Switch Torque	kg·m(lb.ft/N·m)
	4 (29.0/39.2)

15. Detent Ball, Spring and Plug

Tighten the plugs to the specified torque.

Plug Torque	kg·m(lb.ft/N·m)
	1.9 ± 0.4 (13.7 ± 2.9/18.6 ± 3.9)

TRANSFER REAR CASE ASSEMBLY

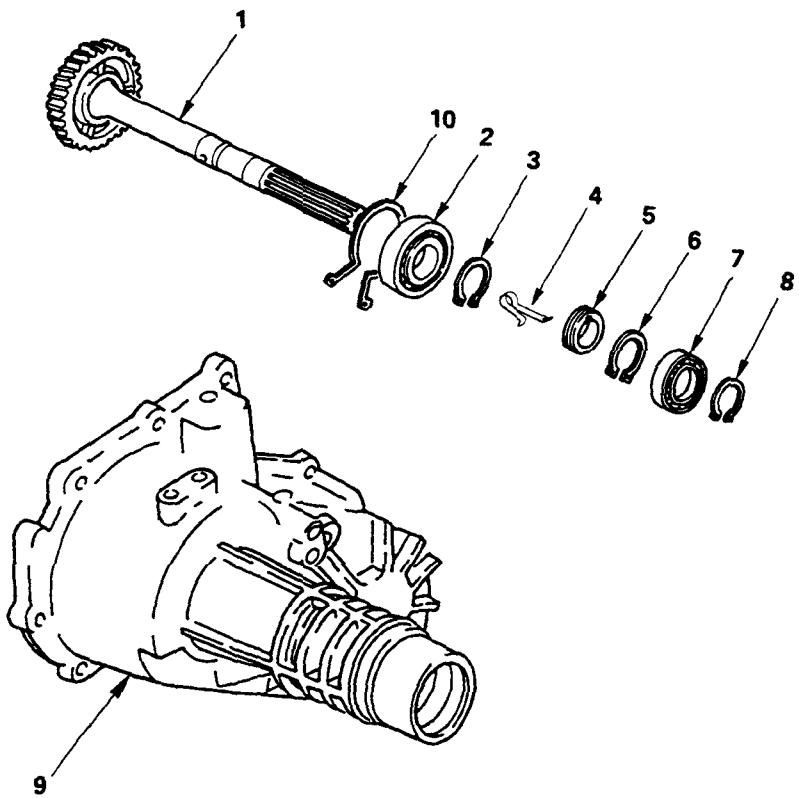

Reassembly Steps

1. Rear output shaft
▲ 2. Ball bearing
3. Bearing snap ring
▲ 4. Clip
5. Speedometer drive gear
6. Bearing snap ring
▲ 7. Ball bearing
8. Bearing snap ring
9. Rear case
10. Bearing snap ring

Important Operations

2. Ball Bearing

Use the ball bearing installer and the adapter to install the ball bearing.

Ball Bearing Installer : 5-8840-2159-0 (J-37223)

Adapter : 5-8840-2192-1 (J-37486-A)

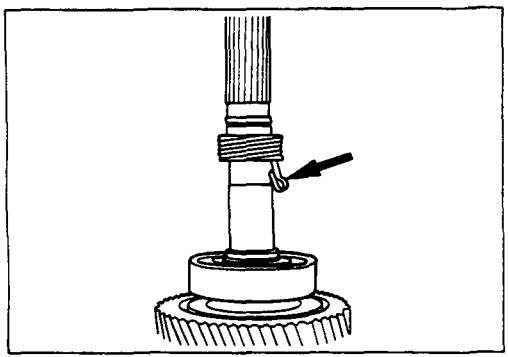

4. Clip

Install the clip to the drive gear groove.

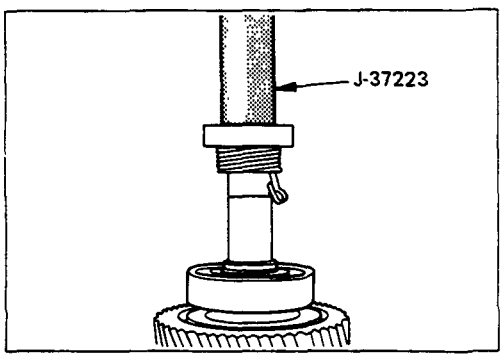

7. Ball Bearing

Use the ball bearing installer to install the ball bearing.

Ball Bearing Installer : 5-8840-2159-0 (J-37223)

REASSEMBLY

EXTERNAL COMPONENTS

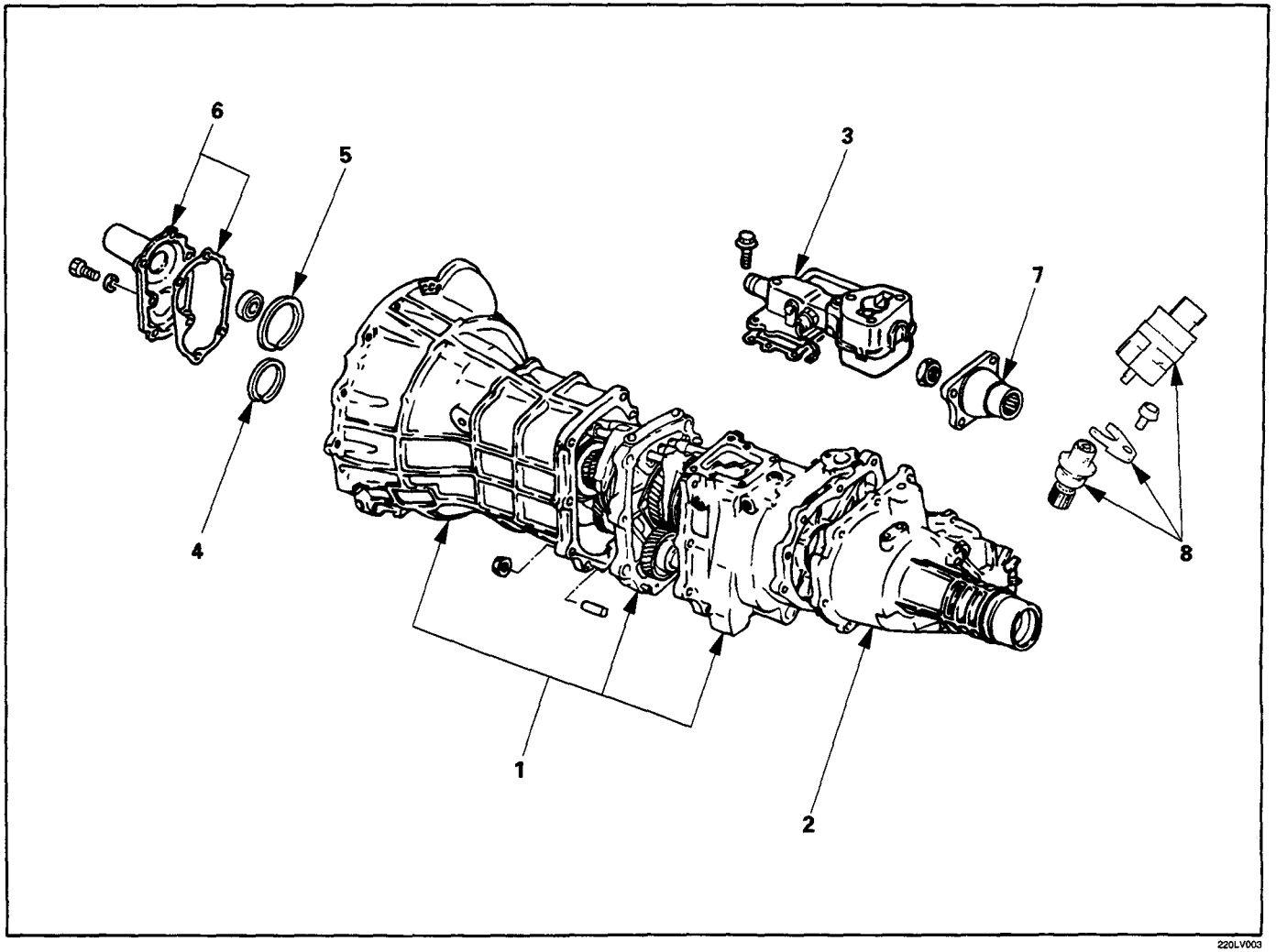

220LV003

Reassembly Steps

1. Transmission and transfer assembly
2. ▲ Transfer rear case assembly
3. Gear control box assembly
4. ▲ Counter gear snap ring
5. ▲ Bearing snap ring
6. ▲ Front cover with oil seal
7. ▲ Transfer flange
8. ▲ Speedometer driven gear and speedometer sensor

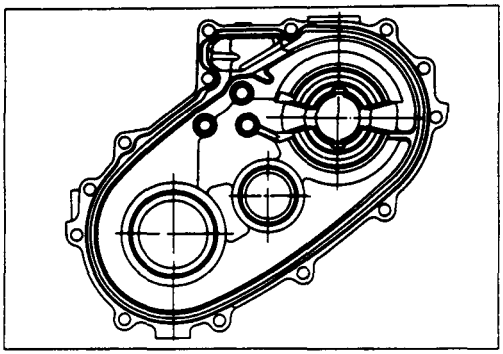

Important Operations

2. Transfer Rear Case Assembly

1) Apply recommended liquid gasket or its equivalent to the transfer rear case fitting faces.

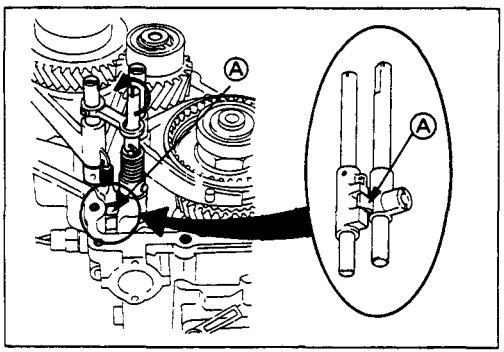

2) Apply the following steps before fitting the transfer rear case.
   ① Shift the High-Low synchronizer to the 4H side.
   ② Turn the select rod counterclockwise so that the select block projection Ⓐ may enter into the 2WD-4WD shift block.

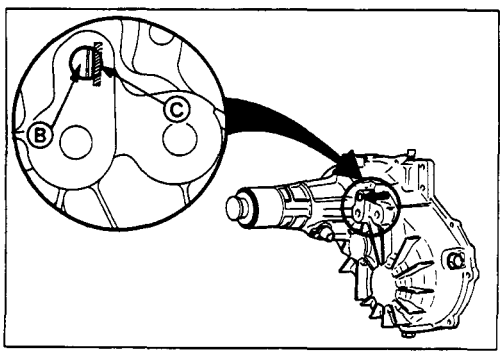

When the rear case is fitted under this condition ②, the direction of the cut-away portion of select rod head Ⓑ aligns with that of the rear case hole's stopper Ⓒ.

3) Tighten the rear transfer rear case bolts to the specified torque.

Transfer Case Bolt Torque	kg·m (lb·ft/N·m)
3.8 ± 0.8 (27.5 ± 5.8/37.2 ± 7.8)	

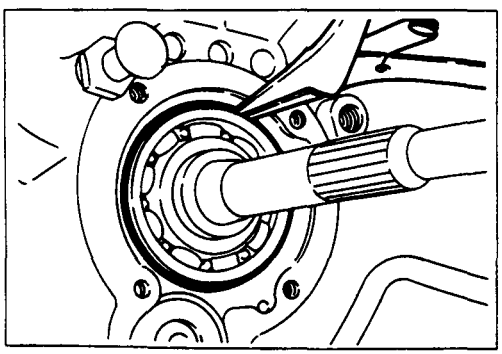

4. Counter Gear Snap Ring

5. Bearing Snap Ring

Use a pair of snap ring pliers to install the snap ring to the mainshaft.

The snap ring must be fully inserted into the ball bearing snap ring groove.

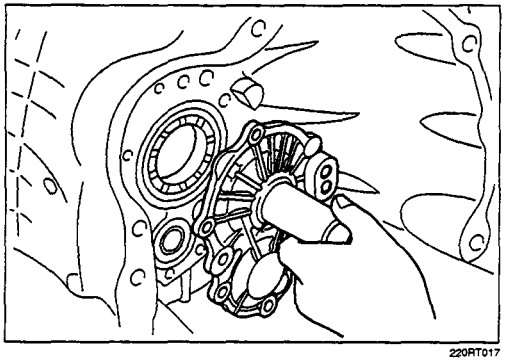

6. Front Cover with Oil Seal

1) Apply recommended liquid gasket or its equivalent to the through bolt threads.
2) Install the new gasket and the front cover with oil seal to the transmission case.

   Take care not to damage the oil seal.
3) Tighten the front cover bolts to the specified torque.

Front Cover Bolt Torque	kg·m (lb·ft/N·m)
1.9 ± 0.4 (13.7 ± 2.9/18.6 ± 3.9)	

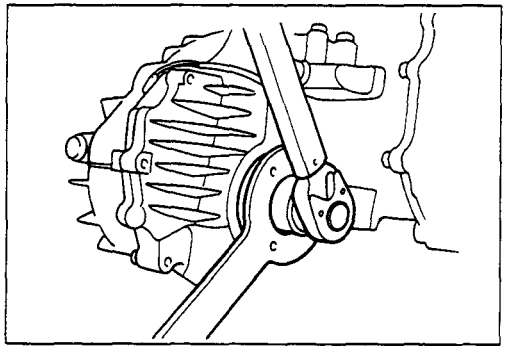

7. Transfer Flange

1) Use the flange holder to install the flange to the rear transfer case.

   Flange Holder : 5-8840-2157-0 (J-27221)
2) Tighten the transfer flange bolts to the specified torque.

Transfer Flange Bolt Torque	kg·m(lb.ft/N·m)
13 ± 1 (94.0 ± 7.2/127.4 ± 9.8)	

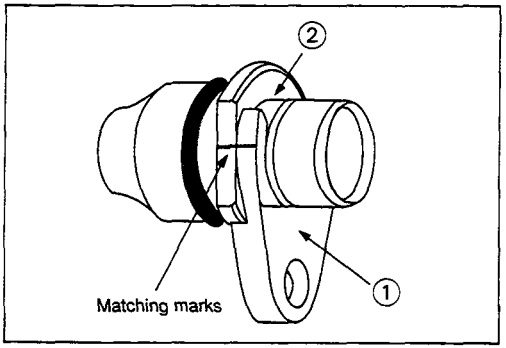

8. Speedometer Driven Gear and Speedometer Sensor

1) Align the matching marks on plate ① and bush ② then tighten the bolt.

Bolt Torque	kg·m (lb·ft/N·m)
1.5 (10.8/14.7)	

2) Install the speedmeter sensor.

	kg·m (lb·ft/N·m)
2.8 (20/27)	

TROUBLESHOOTING

Refer to this Section to quickly diagnose and repair engine problems. Each troubleshooting chart has three headings arranged from left to right.

(1) Checkpoint (2) Trouble Cause (3) Countermeasure

This Section is divided into four sub-sections:

1. Abnormal Noise
   1) Noise in Neutral
   2) Noisy Operation
2. Head Shifting
3. Walking or Jumping Out of Gear
4. Oil Leakage

1. ABNORMAL NOISE

1) NOISY IN NEUTRAL

Checkpoint		Trouble Cause	Countermeasure
Gear oil	NG	Insufficient or improper gear oil	Replenish or replace the gear oil
OK			
Flywheel pilot bearing	NG	Worn flywheel pilot bearing	Replace the flywheel pilot
OK			
Bearings (Mainshaft, counter-shaft, and transfer shaft)	NG	Worn or broken bearing(s)	Replace the bearing(s)
OK			
Gears (Mainshaft, counter-shaft, reverse idler gear and transfer gears	NG	Worn or scuffed gear tooth contact surfaces	Replace the gear(s)
OK			
Mainshaft splines Synchronizer clutch hub splines	NG	Worn splines	Replace the main shaft and the synchronizer clutch hub
OK			
Transmission	NG	Transmission misalignment	Realign the transmission

2) NOISY OPERATION

Checkpoint		Trouble Cause	Countermeasure
Gear oil (Metallic rattling)	NG	Insufficient or improper gear oil	Replenish or replace the gear oil
OK			
Bearings (Hissing, thumping or bumping)	NG	Worn or broken bearing(s)	Replace the bearing(s)
OK			
Gears (Growling, humming, or grinding)	NG	Worn, chipped, or cracked gear(s)	Replace the gear(s)
OK			
Gears (Squealing at high speeds)	NG	Free running gears seizing on the thrust face or the inner face	Replace the gear(s)
OK			
Gears (Gear whining)	NG	Lack of backlash between meshing gears	Replace the gear(s)

2. HARD SHIFTING

Checkpoint		Trouble Cause	Countermeasure
Gear oil	NG	Insufficient or improper gear oil	Replenish or replace the gear oil
OK			
Clutch pedal free play	NG	Improper clutch pedal free play	Readjust the clutch pedal free play
OK			
Change lever operation	NG	Hard operating change lever caused insufficient grease	Repair or regrease the change lever assembly
OK			
Change lever play	NG	Worn change lever sliding portions	Repair or replace the applicable parts and regrease
OK			
Shift block sleeve movement	NG	Sleeve movement failure	Repair or replace the sleeve
OK			
Shift rod and quadrant box sliding faces, and other parts	NG	Worn shift rod and/or sliding faces	Replace the shift rod and/or the quadrant box

Continued on the next page

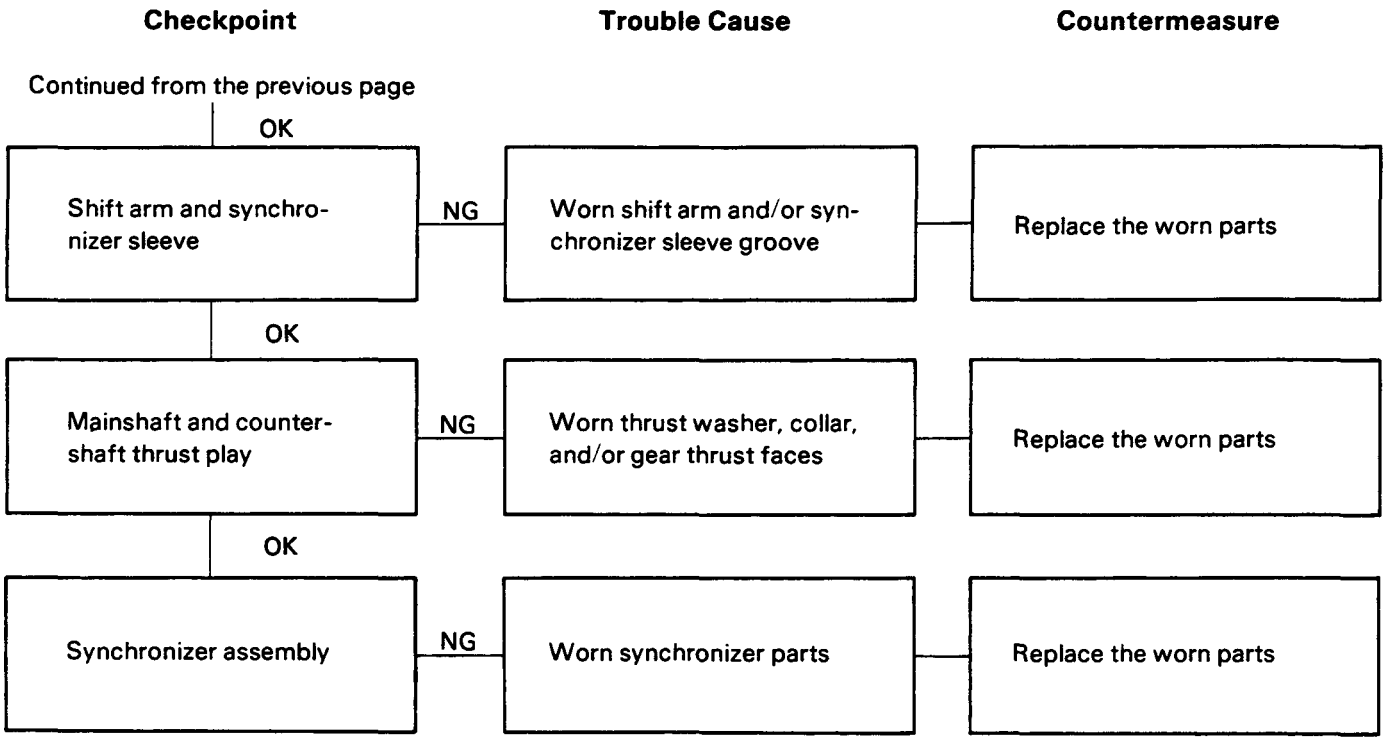
Checkpoint
Trouble Cause
Countermeasure
Continued from the previous page
OK
Shift arm and synchronizer sleeve
NG
Worn shift arm and/or synchronizer sleeve groove
Replace the worn parts
OK
Mainshaft and countershaft thrust play
NG
Worn thrust washer, collar, and/or gear thrust faces
Replace the worn parts
OK
Synchronizer assembly
NG
Worn synchronizer parts
Replace the worn parts

3. WALKING OR JUMPING OUT OR GEAR

Checkpoint		Trouble Cause	Countermeasure
Change lever play	NG	Insufficient stroke caused by sliding position wear and excessive play	Replace the worn parts
OK			
Detent ball	NG	Worn detent ball	Replace the detent ball
OK			
Detent spring	NG	Detent spring weak or broken	Repair or replace the detent spring
OK			
Shift rod and quadrant box sliding faces	NG	Worn shift rod and/or sliding faces	Replace the shift rod and/or the quadrant box
OK			
Shift arm and synchronizer sleeve	NG	Worn shift arm and/or synchronizer sleeve groove	Replace the worn parts
OK			
Mainshaft and countershaft thrust play	NG	Worn thrust washer, collar, and/or gear thrust faces	Replace the worn parts

Continued on the next page

Continued from the previous page

Checkpoint		Trouble Cause		Countermeasure
Bearings (Mainshaft, countershaft, and individual gears)	NG	Worn or broken bearing(s)	—	Replace the bearing(s)
Mainshaft splines Synchronizer clutch hub splines	NG	Worn splines	—	Replace the main shaft and the synchronizer clutch hub
Synchronizer assembly	NG	Weak or broken spring	—	Replace the spring

OK

OK

OK

4. OIL LEAKAGE

Checkpoint		Trouble Cause	Countermeasure
Oil level	NG	Oil level too high	Drain the oil to the correct level
	OK		
Gear oil	NG	Improper gear oil	Replace the gear oil
	OK		
Drain plug and/or filler plug	NG	Loose plug(s)	Tighten the plug(s) and replenish the oil
	OK		
Gaskets	NG	Defective or improperly installed gasket(s)	Replace the gasket(s)
	OK		
Air breather	NG	Air breather not installed Air breather clogged	Install the air breather Replace the air breather
	OK		
Front cover oil seal	NG	Worn or scratched oil seal	Replace the oil seal
	OK		
Rear cover oil seal	NG	Worn or scratched oil seal	Replace the oil seal

DELTA OPEL ISUZU SUZUKI

Hi - Tech

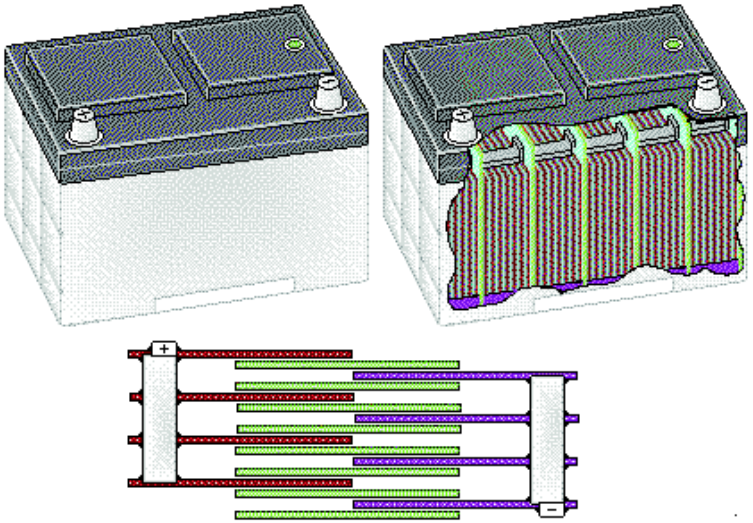

Index

Symbols

Parts

Main data

Specs.

Repairs

KB TF 140
Electrical

ISUZU

SECTION 8
ELECTRICAL-BODY AND CHASSIS

TABLE OF CONTENTS

	PAGE
General Information	8– 1
Notes for Working on Electrical Items	8– 2
Symbols and Abbreviations	8– 8
Symbols	8– 8
Abbreviations	8– 9
Parts for Electrical Circuit	8– 10
Wiring	8– 10
Fusible Link	8– 12
Circuit Breaker	8– 12
Relay	8– 13
Diode	8– 13
Connector	8– 14
Battery	8– 15
Reading the Circuit Diagram	8– 16
Main Data and specifications	8– 19
Bulb Specifications	8– 21
Relay and Fuse Box, Fuse Box Location	8– 21
Fuse and Fuse Box, fuse Box Location	8– 23
Fuse and Fusible Link Location (Relay and Fuse Box	8– 24
Fuse and Circuit Breaker Location (Fuse Box)	8– 25
Relay Location-1 (Relay and Fuse Box)	8– 26
Relay Location-2	8– 27
Diode Location	8– 28
Fuse Block Circuit - Petrol Engine	8– 29
Fuse Block Circuit - Diesel Engine	8– 30
Reference Table of Fuse, Fusible Link and Circuit Breaker	8– 31
Grounding Point Reference Table	8– 39
Ground Point Location	8– 41

Main Cable Harness Routing 8– 43
System Repair 8– 45
Start and Charging 8– 45
QOS System 8– 53
Lighting 8– 57
Hazard Warning Flasher, Turn Signal Light, Back Up Light,79
Horn and Stop Light 8– 76
Dome Light, Spot Light and Warning Buzzer 8– 95
Windshield Wiper and Washer 8– 105
Meter, Warning Light and Indicator Light 8– 120
Heater and Air Conditioning 8– 161
Power Door Lock 8– 164
Power Window 8– 174
Audio, Clock and Cigarette Lighter 8– 192
Power Door Mirror 8– 197
Radiator Level Control Warning System 8– 207
Diff Lock 8– 209
Cell Phone 8– 214
VSS (Vehicle Security System) 8– 219
Connector List 8– 231

GENERAL INFORMATION

The body and chassis electrical system operates on a twelve volt power supply with negative ground polarity.

The main harness consists of the engine harness, the instrument harness, the body harness, and the chassis harness.

The harnesses use a split corrugated tube to protect the wires from the elements.

Wire size is determined by current flow, circuit length, and voltage drop.

All wires have color-coded insulation.

Wire color-codes are shown in the circuit diagrams. This makes it easier to trace circuits and to make the proper connections.

Each circuit consists of the following:

1. Power source - The battery and the alternator
2. Wires - To carry electrical current through the circuit
3. Fuses - To protect the circuit against current overload
4. Relays - To protect voltage drop between the battery and the circuit parts and to protect the switch points against burning
5. Switches - To open and close the circuit
6. Load - Any device, such as a light or a motor, which converts the electrical current into useful work
7. Ground - To allow the current to flow back to the power source

NOTES FOR WORKING ON ELECTRICAL ITEMS

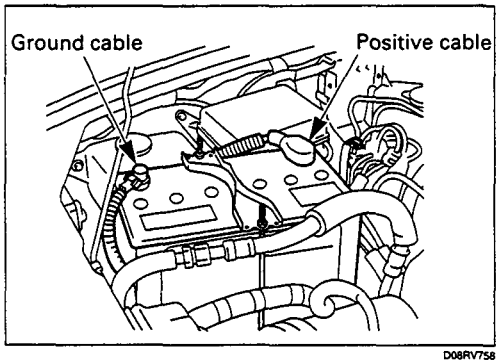

D08RV758

BATTERY CABLE

Disconnecting the Battery Cable

1. All switches should be "OFF" position.
2. Disconnect the battery ground cable.
3. Disconnect the battery positive cable.

CAUTION:
It is important that the battery ground cable be disconnected first.
Disconnecting the battery positive cable first can result in a short circuit.

Connecting the Battery Cable

Follow the disconnecting procedure in the reverse order to connect the battery cables.

CAUTION:
Clean the battery terminal and apply light coat of grease to prevent terminal corrosion.

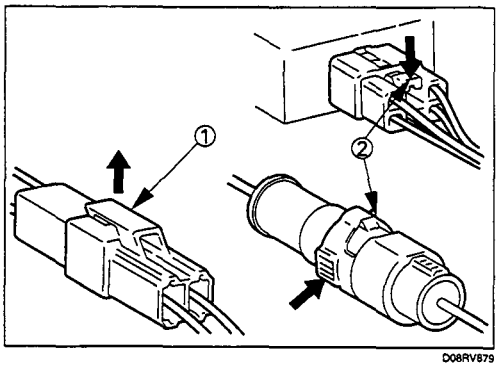

D08RV879

CONNECTOR HANDLING

Disconnecting the Connectors

Some connectors have a tang lock to hold the connectors together during vehicle operation.
Some tang locks are released by pulling them towards you ①.
Other tang locks are released by pressing them forward ②.
Determine which type of tang lock is on the connector being handled.

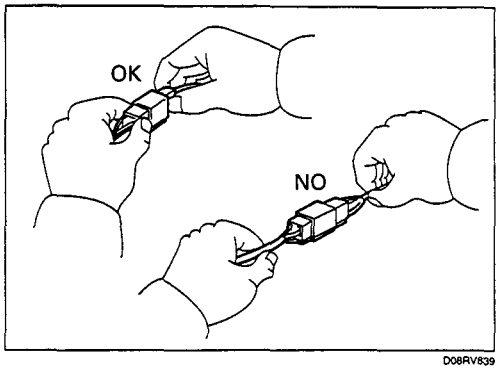

D08RV839

Firmly grasp both sides (male and female) of the connector.
Release the tang lock and carefully pull the two halves of the connector apart.
Never pull on the wires to separate the connectors. This will result in wire breakage.

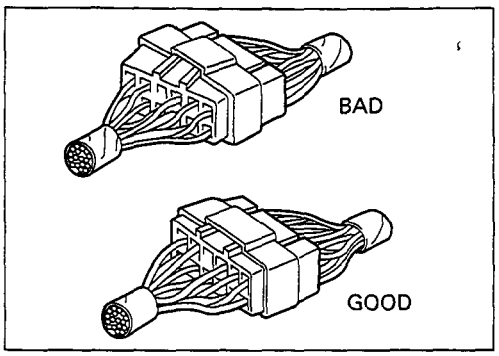

D08RV672

Connecting the Connectors

Firmly grasp both sides (male and female) of the connector.
Be sure that the connector pins and pin holes match.
Be sure that both sides of the connector are aligned with each other.
Firmly but carefully push the two sides of the connector together until a distinct click is heard.

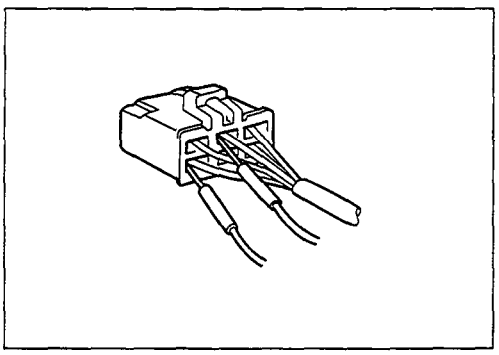
D08RV673

Connector Inspection

Use a circuit tester to check the connector for continuity.
Insert the test probes from the connector wire side.

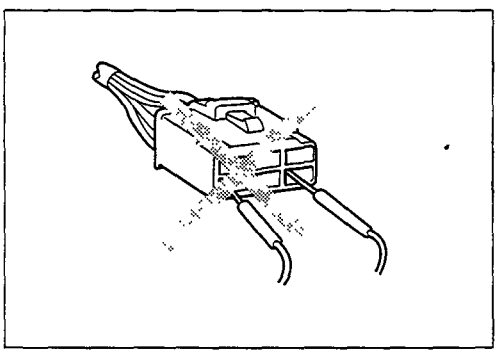
D08RV674

CAUTION
Never insert the circuit tester test probes into the connector open side to test the continuity.
Broken or open connector terminals will result.

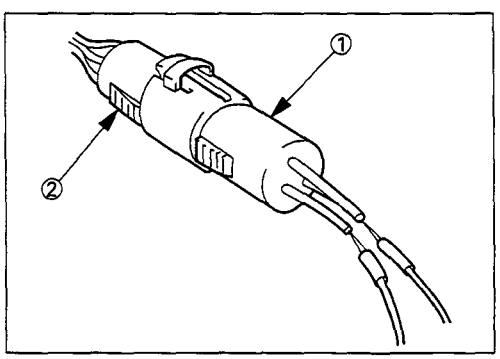

D08RV841

Waterproof Connector Inspection

It is not possible to insert the test probes into the connector wire side of a waterproof connector.
Use one side of a connector ① with its wires cut to make the test.
Connect the test connector to the connector ② to be tested.
Connect the test probes to the cut wires to check the connector continuity.

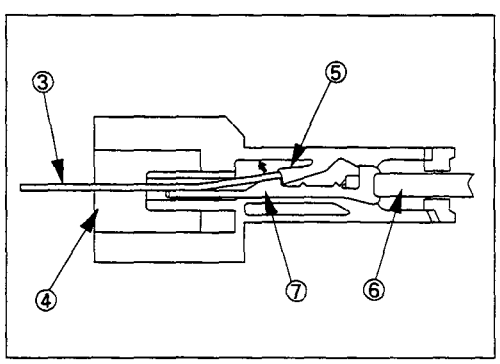

D08RV844

Connector Pin Removal

Connector Housing Tang Lock Type

1. Insert a slender shaft ③ into the connector housing open end ④.
2. Push the tang lock ⑤ up (in the direction of the arrow in the illustration).
   Pull the wire ⑥ with pin ⑦ free from the wire side of the connector.

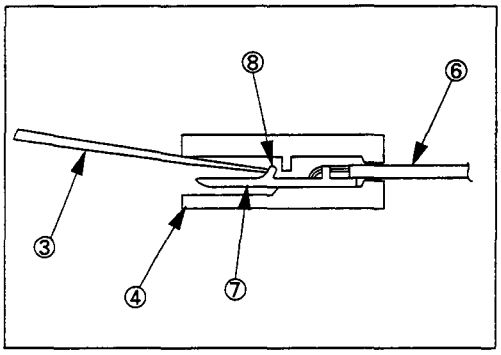

D08RV843

Pin Tang Lock Type

1. Insert a slender shaft ③ into the connector housing open end ④.
2. Push the tang lock ⑧ flat (toward the wire side of the connector).
   Pull the wire ⑥ with pin ⑦ free from the wire side of the connector.

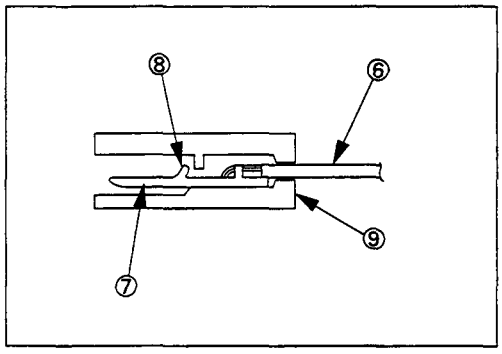

D08RV842

Connector Pin Insertion

1. Check that the tang lock ⑧ is fully up.
2. Insert the pin ⑦ from the connector wire side ⑨.
   Push the pin in until the tang lock closes firmly.
3. Gently pull on the wires ⑥ to make sure that connector pin is firmly set in place.

Fuse Replacement

The replacement fuse must have the same amperage specification as the original fuse.
Never replace a burn out fuse with a fuse of a different amperage specification. Doing so can result in an electrical fire or other serious circuit damage.

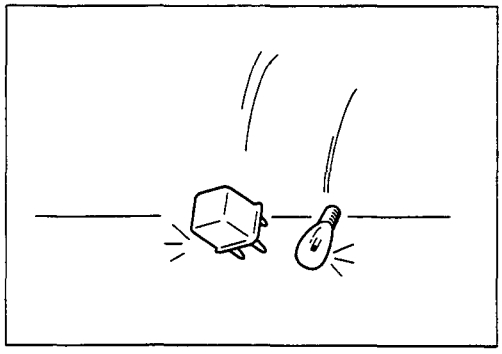

D08RV704

Parts Handling

Be careful for parts handling and any part should not be dropped or thrown, otherwise short circuit or disorder may result.

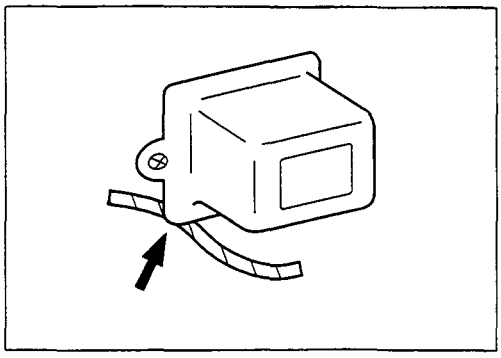

D08RV705

Wiring Harness

1. When assembling the parts, be careful not to bite or wedge the wiring harness.
2. All electrical connections must be kept clean and tight.

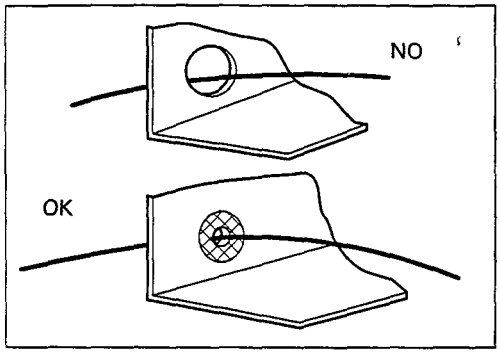

D08RV836

3. Use a grommet or guard tube to protect the wiring harness from contacting a sharp edge or surface.

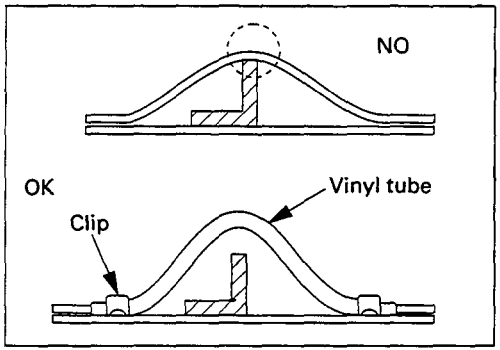

D08RV837

4. Position the wiring harness with enough clearance from the other parts and guard the wiring harness with a vinyl tube to avoid direct contact.

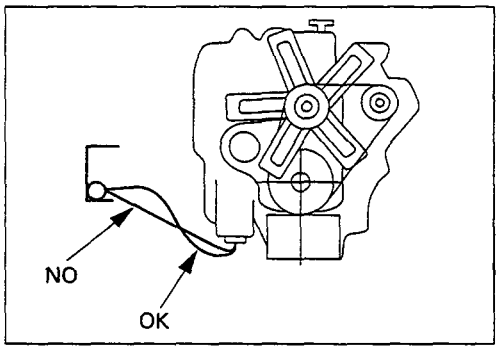

D08RV838

5. The wiring harness between engine and chassis should be long enough to prevent chafing or damage due to various vibrations.

SPLICING WIRE

Open the Harness

If the harness is taped, remove the tape. To avoid wire insulation damage, use a sewing "seam ripper" (available from sewing supply stores) to cut open the harness.
If the harness has a black plastic conduit, simply pull out the desired wire.

Cut the wire

Begin by cutting as little wire off the harness as possible. You may need the extra length of wire later if you decide to cut more wire off to change the location of a splice. You may have to adjust splice locations to make certain that each splice is at least 1-1/2" (40 mm) away from other splices, harness branches, or connectors.

Strip the insulation

When replacing a wire, use a wire of the same size as the original wire. Check the stripped wire for nicks or cut stands. If the wire is damaged, repeat the procedure on a new section of wire. The two stripped wire ends should be equal in length.

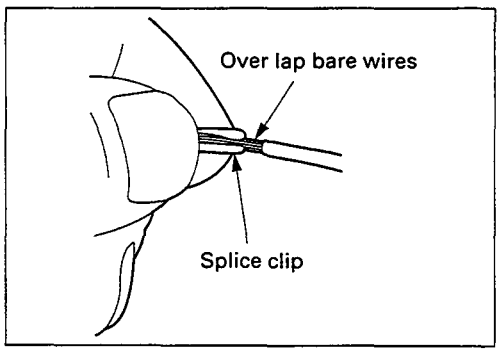

D08RV676

Crimp the Wires

Select the proper clip to secure the splice. To determine the proper clip size for the wire being spliced, follow the directions included with your clips. Select the correct anvil on the crimper. (On most crimpers your choice is limited to either a small or large anvil.) Overlap the two stripped wire ends and hold them between your thumb and forefinger.
Then, enter the splice clip under the stripped wires and hold it in place.

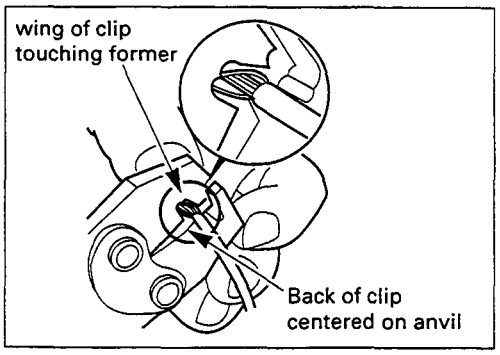

D08RV678

- Open the crimping tool to its full width and rest one handle on a firm flat surface.
- Center the back of the splice clip on the proper anvil and close the crimping tool to the point where the back of the splice clip touches the wings of the clip.
- Make sure that the clip and wires are still in the correct position. Then, apply steady pressure until the crimping tool closes.

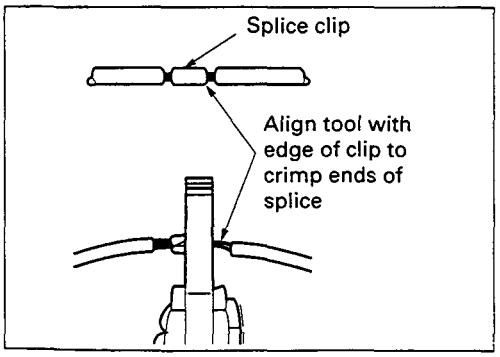

D08RV677

Before crimping the ends of the clip, be sure that:

- The wires extend beyond the clip in each direction.
- No strands of wire are cut loose, and
- No insulation is caught under the clip.

Crimp the splice again, once on each end. Do not let the crimping tool extend beyond the edge of the clip or you may damage or nick the wires.

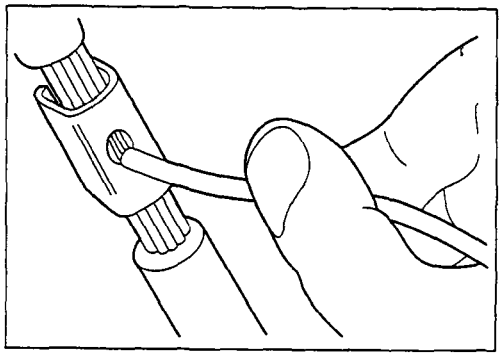

D08RV679

Solder

Apply 60/40 rosin core solder to the opening in the back of the clip. Follow the manufacturer's instructions for the solder equipment you are using.

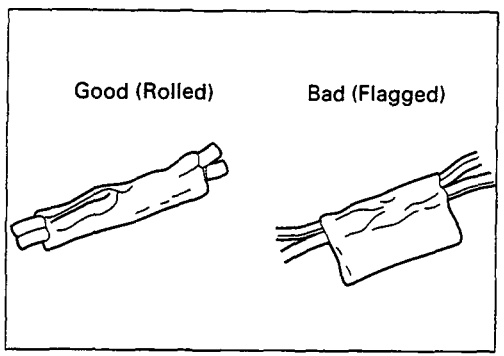

D08RV680

Tape the Splice

Center and roll the splicing tape. The tape should cover the entire splice. Roll on enough tape to duplicate the thickness of the insulation on the existing wires. Do not flag the tape. Flagged tape may not provide enough insulation, and the flagged ends will tangle with the other wires in the harness.

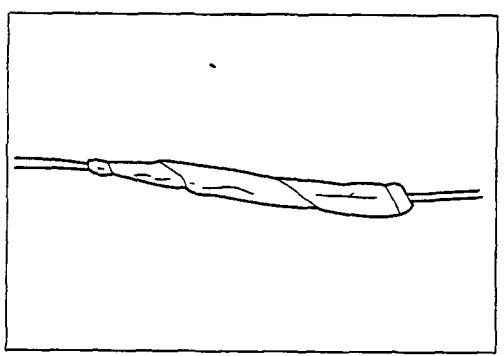

D08RV681

If the wire does not belong in a conduit or other harness covering, tape the wire again. Use a winding motion to cover the first piece of tape.

SYMBOLS AND ABBREVIATIONS

SYMBOLS

Symbol	Meaning of Symbol	Symbol	Meaning of Symbol
	Fuse		Bulb
	Fusible link		Double filament bulb
	Fusible link wire	M	Motor
	Switch		Variable resistor Rheostat
	Switch		Coil (inductor), solenoid, magnetic valve
	Switch (Normal close type)		Relay
	Contact wiring		
+ −	Battery		
	Diode		Connector
	Electronic Parts		Light emitting diode
	Resistor		Reed switch
	Speaker		Condenser
	Buzzer		Horn
	Circuit breaker		Vacuum switching valve

ABBREVIATIONS

Abbreviation	Meaning of Abbreviation	Abbreviation	Meaning of Abbreviation
A	Ampere (S)	LH	Left hand
ABS	Anti-lock brake system	LWB	Long wheel base
ASM	Assembly	MPI	Multiport fuel injection
AC	Alternating current	M/T	Manual transmission
A/C	Air conditioner	OD	Over drive
ACC	Accessories	OPT	Option
A/T	Automatic transmission	QOS	Quick on start
CARB	Carburetor	RH	Right hand
C/B	Circuit breaker	RR	Rear
CSD	Cold start device	RWAL	Rear wheel anti-lock brake system
DIS	Direct ignition system	SRS	Supplemental restraint system
EBCM	Electronic brake control module	ST	Start
ECGI	Electronic control gasoline injection	STD	Standard
ECM	Engine control module	SW	Switch
ECU	Electronic control unit	SWB	Short wheel base
EFE	Early fuel evaporation	TCM	Transmission control module
4A/T	4-speed automatic transmission	3A/T	3-speed automatic transmission
4X4	Four-wheel drive	V	Volt
FL	Fusible link	VSV	Vacuum switching valve
FRT	Front	W	Watt (S)
H/L	Headlight	WOT	Wide open throttle
IC	Integrated circuit	W/	With
IG	Ignition	W/O	Without
kW	kilowatt		

PARTS FOR ELECTRICAL CIRCUIT

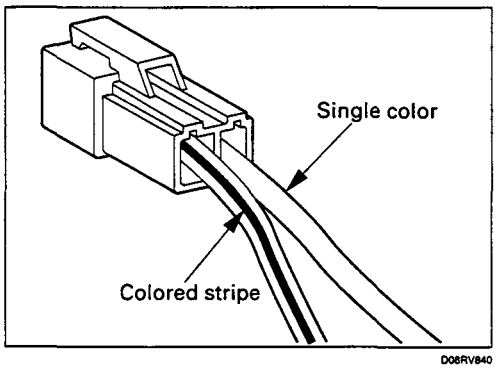

WIRING

Wire Color

All wires have color-coded insulation.
Wires belonging to system's main harness will have a single color. Wires belonging to a system's sub-circuits will have a colored stripe. Striped wires use the following code to show wire size and colors.

Example: 0.5 G / R

- R — Red (Stripe color)
- G — Green (Base color)
- 0.5 — Wire size (0.5 mm^2)

Abbreviations are used to indicate wire color within a circuit diagram.
Refer to the following table.

Wire Color-Coding

Color-Coding	Meaning	Color-Coding	Meaning
B	Black	BR	Brown
W	White	LG	Light green
R	Red	GR	Grey
G	Green	P	Pink
Y	Yellow	LB	Light blue
L	Blue	V	Violet
O	Orange		

Distinction of Circuit by Wire Base Color

Base color	Circuits	Base color	Circuits
B	Starter circuit and grounding circuit	Y	Instrument circuit
W	Charging circuit	L,O, BR, LG, GR, P, LB, V	Other circuits
R	Lighting circuit		
G	Signal circuit		

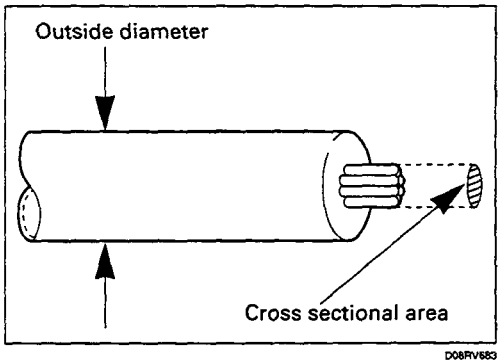

D08RV683

Wire Size

Wire size is specified with the metric gauge system. The metric gauge system gives the wire size in cross sectional area measured in square millimeters.

Wire Size Specifications

Normal size	Cross sectional area (mm^2)	Outside diameter (mm)	Allowable current (A)
0.3	0.372	1.8	9
0.5	0.563	2.0	12
0.85	0.885	2.2	16
1.25	1.287	2.5	21
2	2.091	2.9	28
3	3.296	3.6	37.5
5	5.227	4.4	53
8	7.952	5.5	67
15	13.36	7.0	75
20	20.61	8.2	97

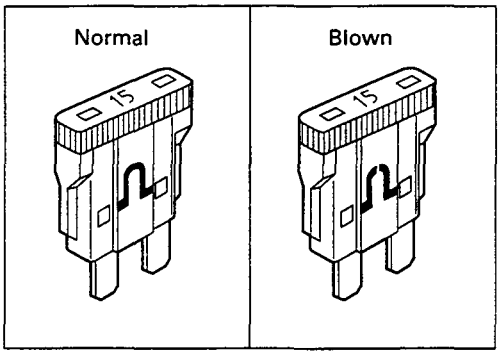

D08RV684

FUSE

Fuses are the most common form of circuit protection used in vehicle wiring. A fuse is a thin piece of wire or strip of metal encased in a glass or plastic housing. It is wired in series with the circuit it protects. When there is an overload of current in a circuit, such as a short of a ground, the wire or metal strip is designed to burn out and interrupt the flow of current. This prevents a surge of high current from reaching and damaging other components in the circuit.

Determine the cause of the overloaded before replacing the fuse.

Never replace a blown fuse with a fuse of a different amperage specification.

Doing so can result in an electrical fire or other serious circuit damage. A blown fuse is easily identified.

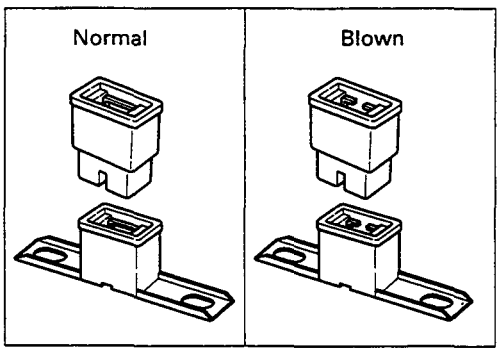

FUSIBLE LINK

The fusible link is primarily used to protect circuits where high amounts of current flow and where is would not be practical to use a fuse. For example, the starter circuit. When a current overload occurs, the fusible link melts open and interrupts the flow of current so as to prevent the rest of the wiring harness from burning.

Determine the cause of the overload before replacing the fusible link. The replacement fusible link must have the same amperage specification as the original fusible link.

Never replace a blown fusible link with fusible link of a different amperage specification. Doing so can result in an electrical fire or other serious circuit damage.

A blown fusible link is easily identified.

Fusible Link Specifications

Type	Rating	Case Color	Maximum Circuit Current (A)
Connector	30A	Pink	15
Connector	40A	Green	20
Bolted	50A	Red	25
Bolted	60A	Yellow	30
Bolted	80A	Black	40

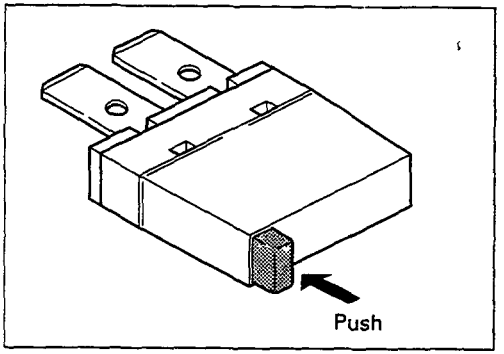

CIRCUIT BREAKER

The circuit breaker is a protective device designed to open the circuit when a current load is in excess of rated breaker capacity. If there is a short or other type of overload condition in the circuit, the excessive current will open the circuit between the circuit breaker terminals. The reset knob pops out when the circuit is open. Push the reset knob in place to restore the circuit after repairing it.

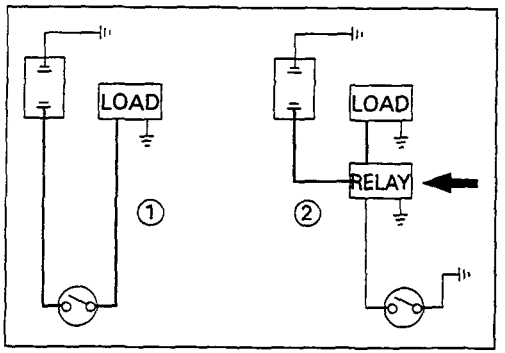

RELAY

Battery and load location may require that a switch be placed some distance from either component. This means a longer wire and a higher voltage drop ①. The installation of a relay between the battery and the load reduces the voltage drop ②.
Because the switch controls the relay, amperage through the switch can be reduced.

Relay Specifications and Configurations

Name/ Color	Rated voltage/ Coil resistance	Internal circuit
1T (MR5C)/ Black	12V Approx. 90Ω Minimum operating voltage: 7V at 25°C(77°F)	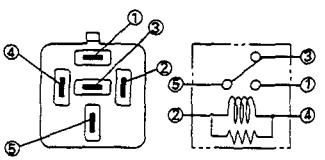
1T (MR5C)/ Brown	12V Approx. 90Ω Minimum operating voltage: 10.5V at 25°C(77°F)	060RV005

* Relay contact shown in the wiring diagram indicates condition before actuation.

DIODE

Diode Specifications and Configurations

SHAPE	MARK/ COLOR	CONSTRUCTION	CHECKING (THERE SHOULD BE CONTINUITY IN EITHER A OR B WHEN A CIRCUIT TESTER IS CONNECTED WITH DIODE TERMINAL)
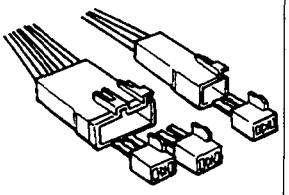	BLACK	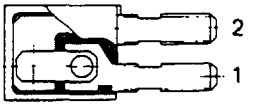	
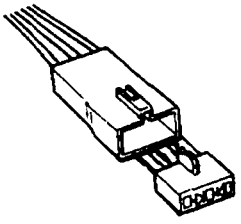	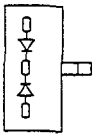 BLACK	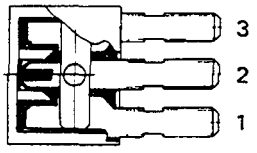	
	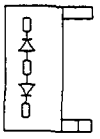 BLACK		
	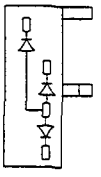 BLACK	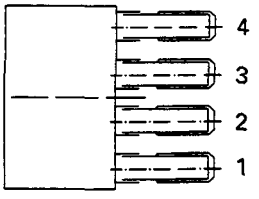	

Diode Specifications and Configurations

TERMINAL NO.		2	1
CONNECTION PATTERN	A	⊕	⊖
	B	⊖	⊕

TERMINAL NO.		3	2	1
CONNECTION PATTERN	A	⊖	⊕	
			⊕	⊖
	B	⊕	⊖	
			⊖	⊕

TERMINAL NO.		3	2	1
CONNECTION PATTERN	A	⊖	⊕	
			⊕	⊖
	B	⊕	⊖	
			⊖	⊕

TERMINAL NO.		4	3	2	1
CONNECTION PATTERN	A			⊕	⊖
			⊖	⊕	
		⊖		⊕	
	B			⊖	⊕
			⊕	⊖	
		⊕		⊖	

Maximum Rating (Temp.=25°C)

Items	Rating	Remarks
Peak reverse voltage	400V	
Transient peak reverse voltage	500V	
Average output current	1.5A	Temp.=40°C
Working ambient temperature	–30°C~80°C	
Storage temperature	–40°C~100°C	

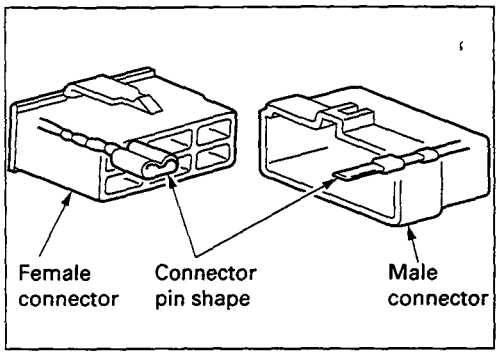

D08RV685

CONNECTOR

The connector pin shape determines whether the connector is male or female.
The connector housing configuration does not determine whether a connector is male or female.

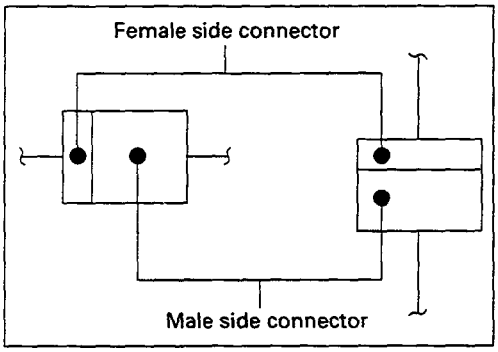

D08RV710

The symbol illustrated in the figure is used as connector in the circuit of this section.

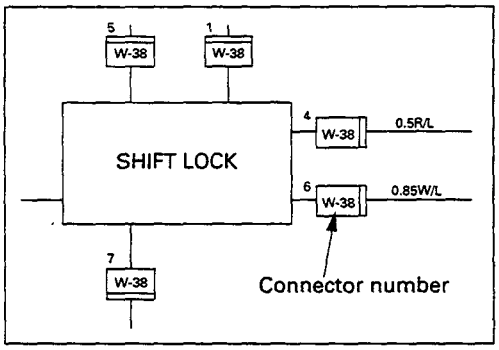

D08RV711

Connector is identified with a number.

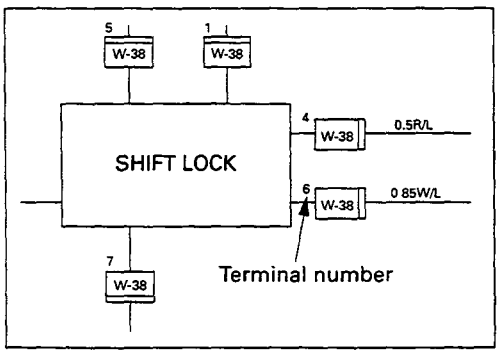

D08RV712

The applicable terminal number is shown for each connector.

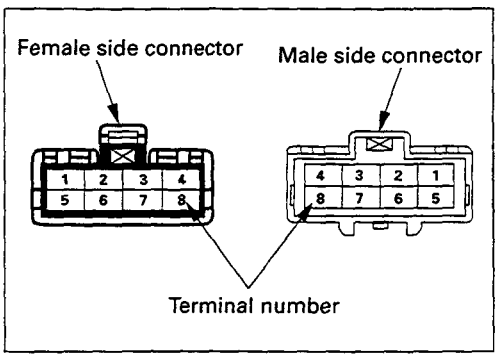

D08RV713

Connector terminal numbers are clearly shown.
Male side connector terminal numbers are in sequence from upper right to lower left.
Female side connector terminal numbers are in sequence from upper left to lower right.

NOTE:
For those connectors on which specific terminal numbers on symbols are shown, the terminal numbers or symbols are used in the circuit diagram, irrespective of the above rule.

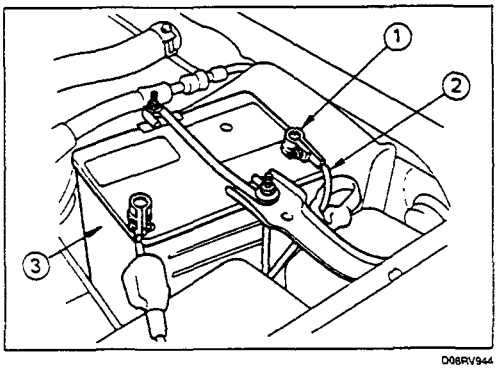

D08RV944

BATTERY

Inspection

1. Check the battery terminals ① for corrosion.
2. Check the battery cables ② for looseness.
3. Check the battery case ③ for cracks and other damage.
4. Check the battery electrolyte level.
   If the electrolyte level is excessively low, the battery must be replaced.
5. If the battery has a built-in hydrometer, perform the following steps:
   1) Carefully clean the battery upper surface.
   2) Check the hydrometer.
      The hydrometer design will vary with the battery manufacturer.
      Refer to the illustration shown on the battery.

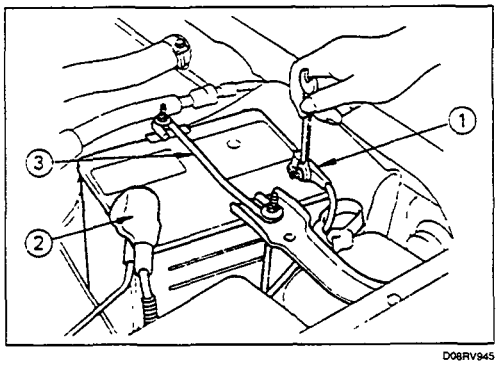

D08RV945

Battery Replacement

1. Disconnect the battery ground cable ①.
2. Disconnect the battery positive cable ②.
3. Remove the battery clamp ③.
4. Remove the battery

Caution:
It is important that the battery ground cable be removed first.
Removing the battery positive cable first can result in a short circuit.

Jump Starting the Engine with a Booster Battery

The following description assumes that you are using a booster battery mounted on a second vehicle.
The listed steps (with some minor modifications) are also applicable if you are using a naked booster battery or special battery charging equipment.

Caution:
Never push or tow the vehicle in an attempt to start it. Extensive damage to the emission system and other vehicle parts will result. (only catalytic converter vehicle)
Treat both the discharged battery and the booster battery with great care when using jumper cables.
Carefully follow the procedure outlined below.
Always be aware of the dangers of sparking.

Failure to follow the following procedure can result in:

a. **Serious personal injury, especially to your eyes.**
b. **Extensive property damage from a battery explosion, battery acid discharge, or electrical fire.**
c. **Extensive damage to the electronic components of both vehicles.**

Do not use a 24 volt booster battery. Serious damage to the vehicle's electrical system and electronic components will result.

Jump Starting Procedure

1. Set the parking brake on both vehicles.
2. If one or both vehicles is equipped with an automatic transmission, place the selector lever in the "PARK" position.

   If one or both vehicles is equipped with a manual transmission, place the gear shift in the "NEUTRAL" position.
3. Turn off the ignition on both vehicles.
4. Turn off all vehicle lights and accessories.
5. Check the built-in hydrometer on the discharged battery (If so equipped).

   If there is no hydrometer indication abandon the jump start procedure.
6. Be sure that the two vehicles are not touching.

   Attach the end of one jumper cable to the booster battery positive terminal.
7. Attach the other end of the same cable to the discharged battery positive terminal.
8. Once again, check that the booster battery has a 12-volt rating.
9. Attach one end of the remaining booster cable to the booster battery negative terminal.
10. Attach the other end of the booster cable to a solid ground (such as the air conditioner compressor mounting bracket or the alternator mounting bracket) in the engine room of the vehicle with the discharged battery.

    Be sure that the ground connection is at least 500 mm (20 in) from the discharged battery.

Caution:
Do not attach the booster cable to the discharged battery negative terminal.

11. Start the engine of the vehicle with the booster battery.

    Check that all unnecessary electrical accessories are off.

12. Start the engine of the vehicle with the discharged battery.

13. Remove the jumper cables in the reverse order to which they were attached.

Caution:
Be absolutely sure to remove the negative jumper cable from the vehicle with the discharged battery first.

READING THE CIRCUIT DIAGRAM

In this manual, each system has its own parts location illustration and circuit diagram. And connector configurations used in the circuit diagram are shown at the end of this manual.

PARTS LOCATION: The parts location shows the location of the connectors ① and the harnesses ② used in the each system.

CIRCUIT DIAGRAM: The circuit diagram shows the power supply ③, the load or loads ④ and the grounding point(s) ⑤.

CONNECTOR LIST: The connector configuration shows each connector's number ⑥, configuration ⑦ and the pin numbers ⑧.

PARTS LOCATION

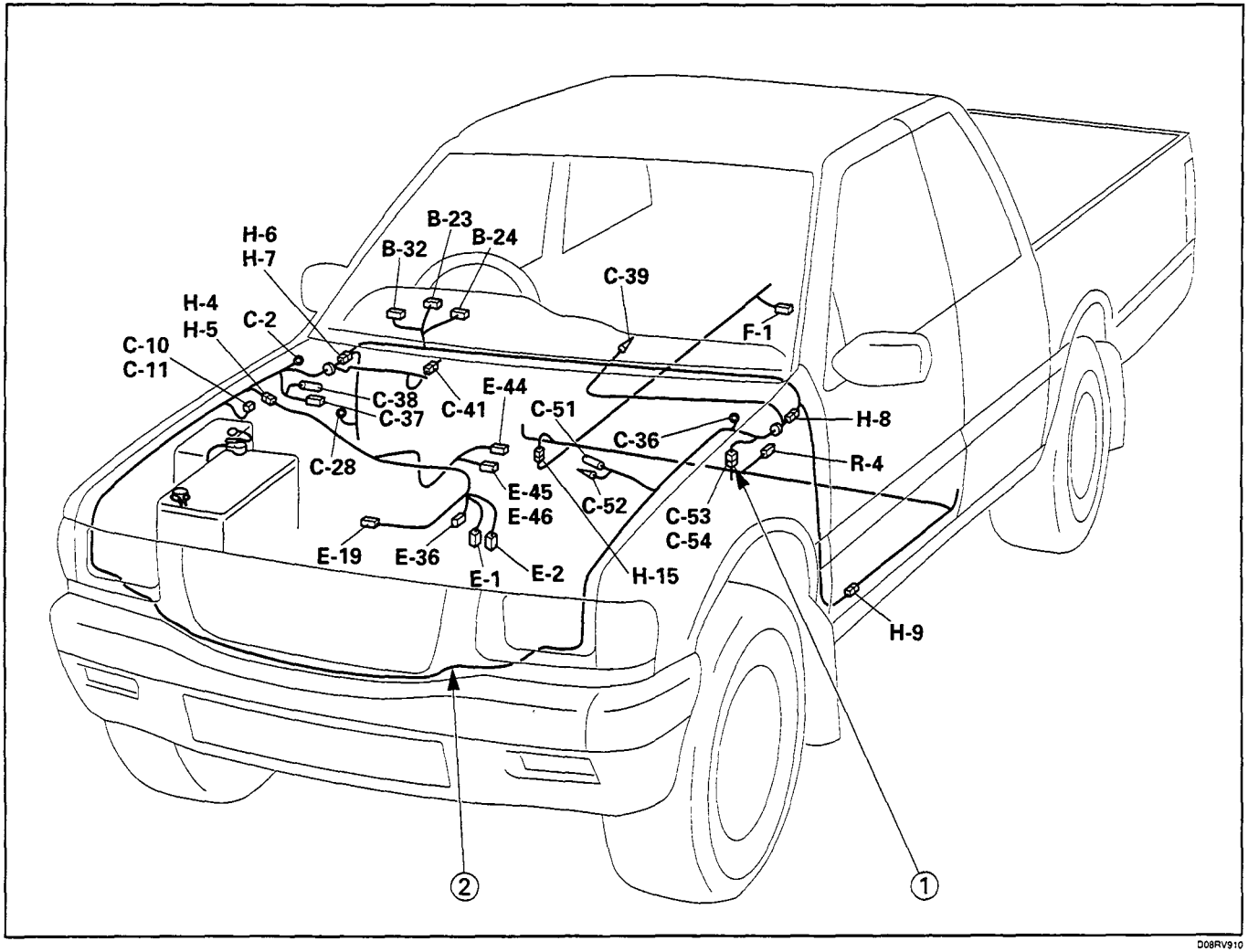

D08RV910

CIRCUIT DIAGRAM

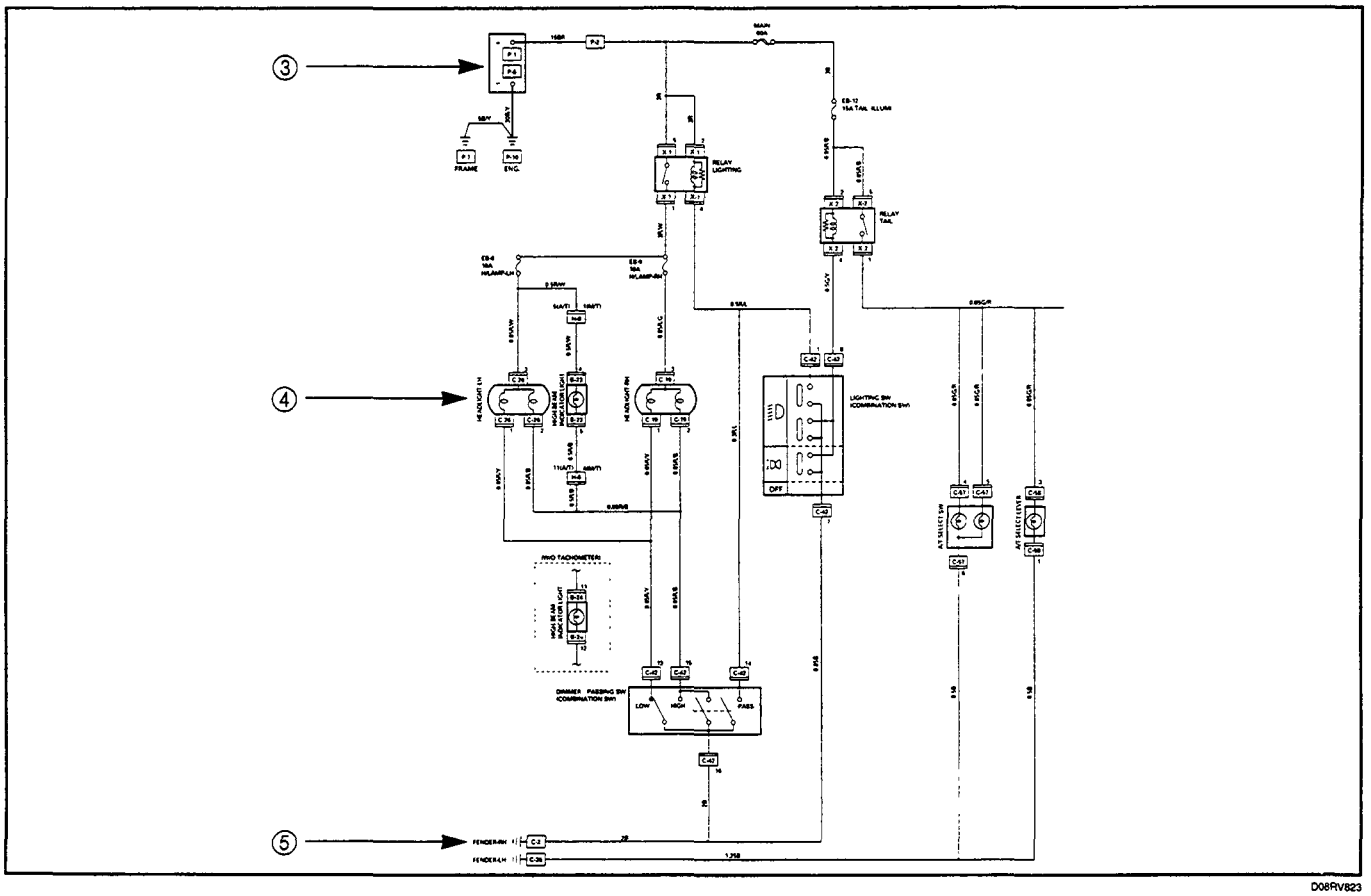

D08RV823

CONNECTOR LIST

CONNECTOR LIST

No.	Connector face	No.	Connector face
B-1		B-11	NOT USED
B-2		B-12	
B-3		B-13	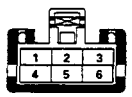
B-4	NOT USED	B-14	
			NOT USED

⑥ ⑦ ⑧

MAIN DATA AND SPECIFICATIONS

BULB SPECIFICATIONS

This illustration is based on LHD

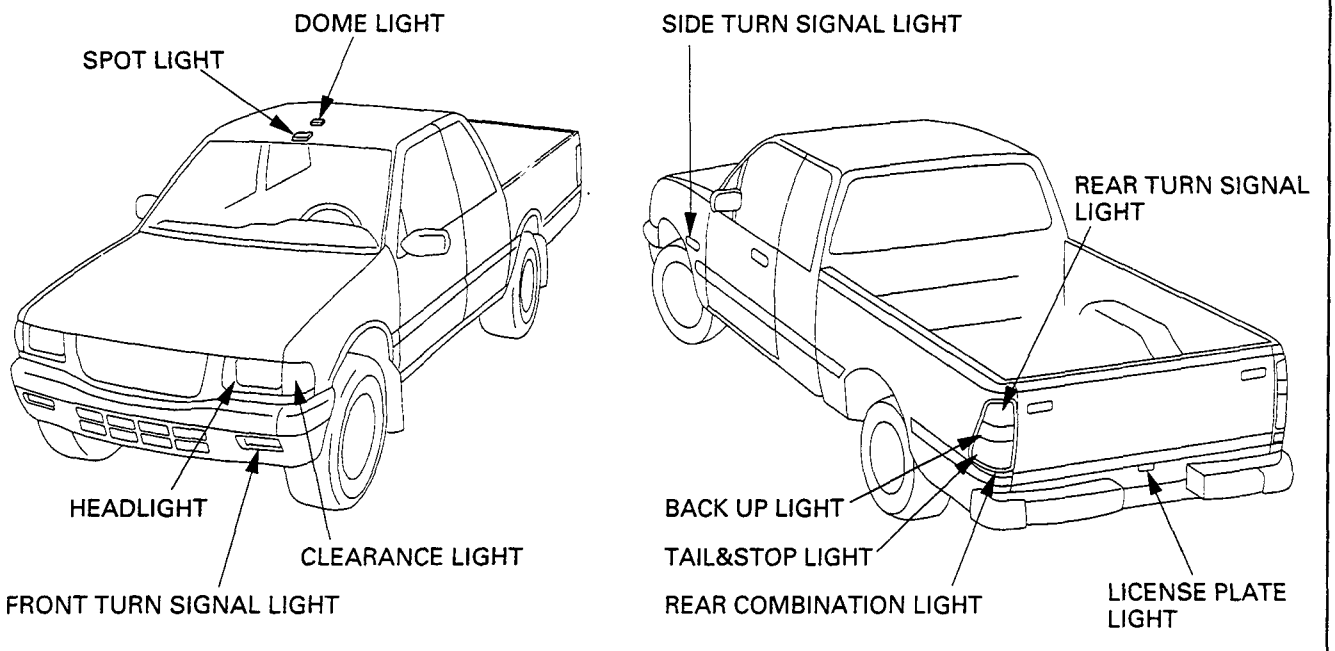

D08RV911

Light Name	Bulb No.	Rated Power V-W	Number of Bulbs	Lens Color	Remarks
Headlight	H4	12–60/55	2	White	Halogen
	R2	12–45/40	2	White	
Front turn signal light	—	12–23	2	Amber	
Side turn signal light	W5W	12–5	2	Amber	
Rear turn signal light	P21W	12-21	2	Amber	
Tail and stop light	P21/5W	12–21/5	2	Red	
Back up light	P21W	12–21	2	White	
License plate light	W5W	12–5	1 or 2	White	
Clearance light	W5W	12–5	2	White	
A/C-Heater control light	—	12–0.7	1	—	
Dome light	—	12–10	1	White	
Spot light	—	12–5	2	White	
Inspection light	—	12–5	1	White	

	Light name		Bulb No.	Rated power V-W	Number of of bulbs	Lens colour	Remarks
INDICATOR / WARNING LIGHT	Charging system	Gasoline engine	-	14-3.0	1	RED	
		Diesel engine	74	14-1.4	1		
	Check engine		74	14-1.4	1	Red	Gasoline (MPI) engine
	Turn signal	W/O Tachometer	158	14-3.4	2	Green	
		W/Tachometer	74	14-1.4	2		
	High beam	W/O Tachometer	158	14-3.4	1	Blue	
		W/Tachometer	74	14-1.4	1		
	Low fuel	W/O Tachometer	-	14-3.0	1	Amber	
		W/Tachometer	74	14-1.4	1		
	Oil pressure		74	14-1.4	1	Red	
	Brake system		74	14-1.4	1	Red	
	4WD	W/O Tachometer	158	14-3.4	1	Green	
		W/Tachometer	74	14-1.4	1		
	Overdrive off		74	14-1.4	1	Amber	A/T
	Glow		74	14-1.4	1	Amber	Diesel engine
	Sedimenter		74	14-1.4	1	Red	Diesel engine
	Timing belt		74	14-1.4	1	Red	4JA1-T engine (RHD models)
	Diff. lock		74	14-1.4	1	Green	South Africa

RELAY AND FUSE BOX, FUSE BOX LOCATION

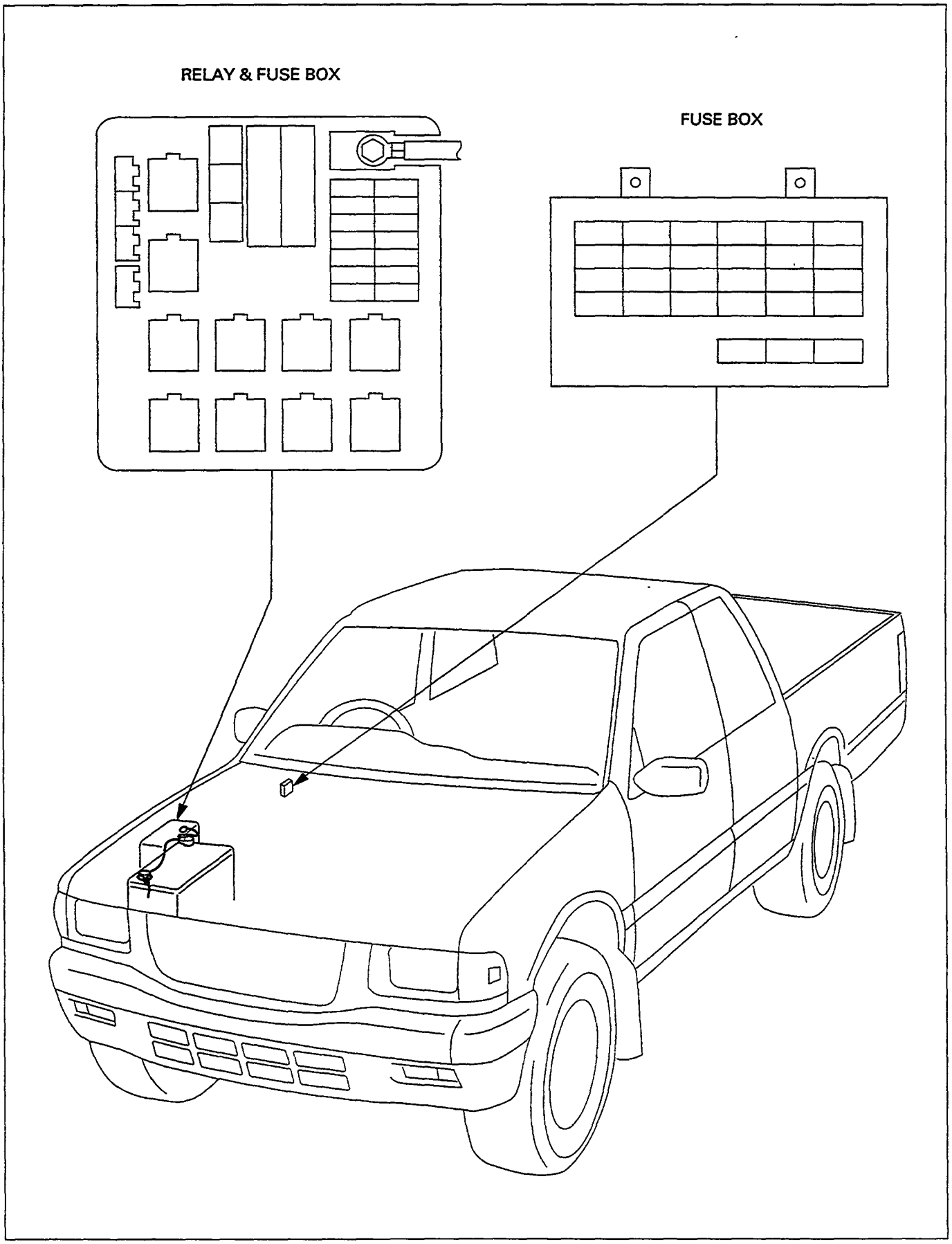

FUSE AND FUSIBLE LINK LOCATION (RELAY AND FUSE BOX)

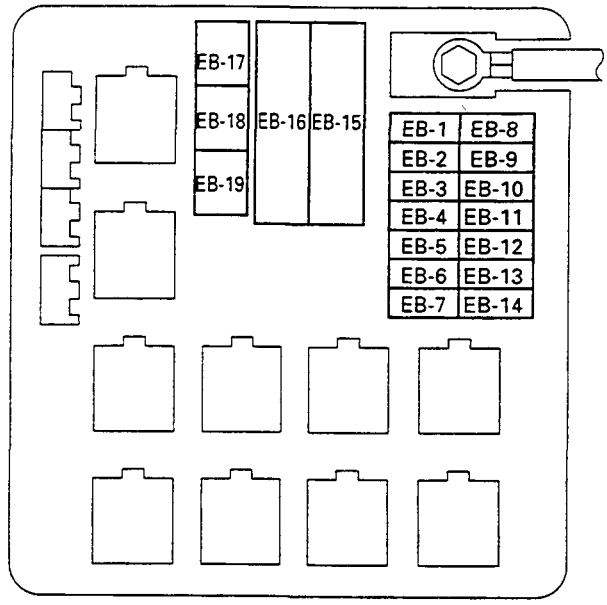

FUSE

NO. / Engine model	4Z Series	4J Series	4JA1 (South Africa)
EB-1	15A HAZARD	15A HAZARD	15A HAZARD
EB-2	10A HORN	10A HORN	10A HORN
EB-3	-	-	-
EB-4	20A BLOWER	20A BLOWER	20A BLOWER
EB-5	10A AIR CON.	10A AIR CON.	10A AIR CON.
EB-6	-	-	-
EB-7	-	10A (CHARGE)	-
EB-8	10A H/LAMP-LH	10A H/LAMP-LH	10A H/LAMP-LH
EB-9	10A H/LAMP-RH	10A H/LAMP-RH	10A H/LAMP-RH
EB-10	-	-	-
EB-11	10A STOP	10A STOP	10A STOP
EB-12	15A TAIL	15A TAIL	15A TAIL
EB-13	-	-	-
EB-14	10A AUTO CHOKE	-	-

FUSIBLE LINK

NO. / Engine model	4Z Series	4J Series	4JA1 (South Africa)
EB-15	40A IGN. BI	40A IGN. BI	40A IGN. BI
EB-16	80A MAIN	100A MAIN	80A MAIN
EB-17	50A GLOW	50A GLOW	50A GLOW
EB-18	-	-	-
EB-19	40A IGN. B2, POWER	40A IGN. B2, POWER	40A IGN. B2, POWER

FUSE AND CIRCUIT BREAKER LOCATION (FUSE BOX)

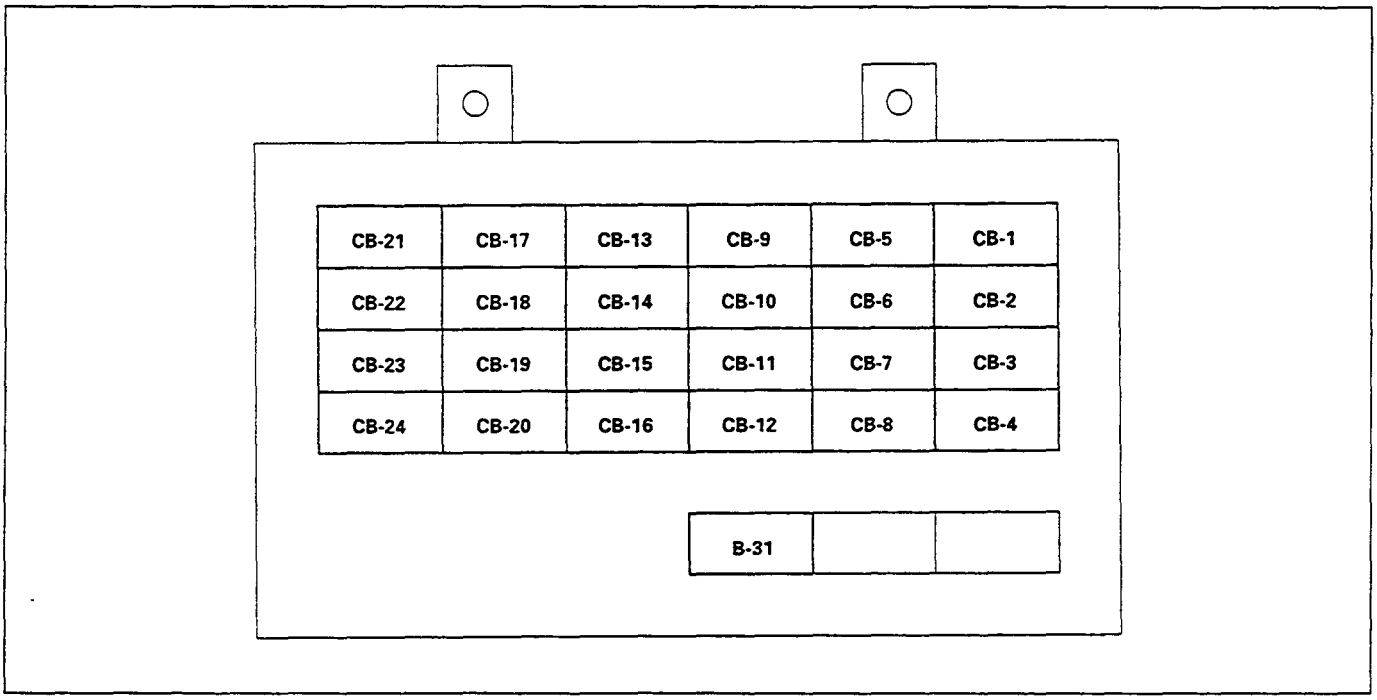

FUSE

No.	Capacity	Indication on label	No.	Capacity	Indication on label
CB-1	10A	STARTER	CB-13	10A	ROOM
CB-2	-	-	CB-14	20A	DOOR LOCK
CB-3	15A	ENGINE-1	CB-15	10A	DRIVING LIGHT
CB-4	10A	ENGINE-2	CB-16	-	-
CB-5	15A	METER	CB-17	5A	CELL EARTH (option)
CB-6	10A	DIFF LOCK	CB-18	-	-
CB-7	15A	AUDIO	CB-19	15A	CIGAR
CB-8	-	-	CB-20	-	-
CB-9	5A	CELL IGN (OPTION)	CB-21	-	-
CB-10	10A	TOW AUX	CB-22	-	-
CB-11	20A	WIPER	CB-23	5A	CELL POS (OPTION)
CB-12	15A	BACK TURN	CB-24	10A	V.S.S.

CIRCUIT BREAKER

No.	Capacity	Indication on label
B-31	30A	(POWER WINDOW)

RELAY LOCATION-1 (RELAY AND FUSE BOX)

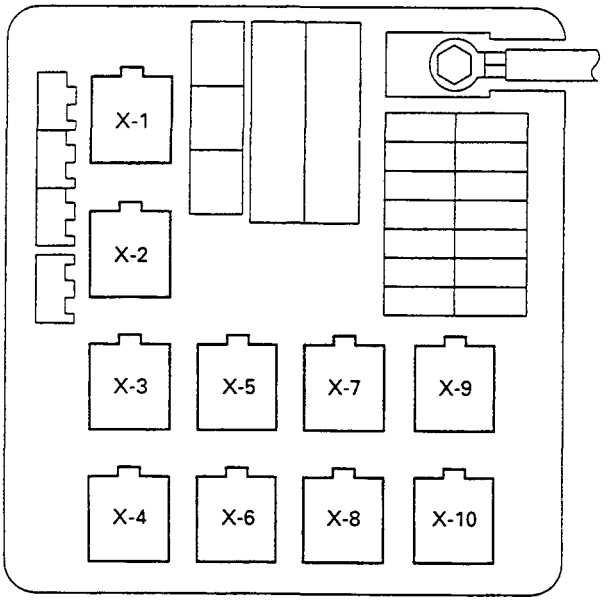

RELAY

NO. \ Engine model	4Z Series	4JB1	4JA1
X-1	RELAY; LIGHTING	RELAY; LIGHTING	RELAY; LIGHTING
X-2	RELAY; TAIL	RELAY; TAIL	RELAY; TAIL
X-3	RELAY; HEATER	RELAY; HEATER	RELAY; HEATER
X-4	RELAY; HORN	RELAY; HORN	RELAY; HORN
X-5	RELAY; CHARGE	RELAY; CHARGE	-
X-6	RELAY; STARTER	-	RELAY; STARTER
X-7	(RELAY; THERMO)	(RELAY; THERMO)	(RELAY; THERMO)
X-8	-	-	RELAY; ST. CUT
X-9	-	(RELAY; CSD)	(RELAY; CSD)
X-10	-	-	-

RELAY LOCATION - 2

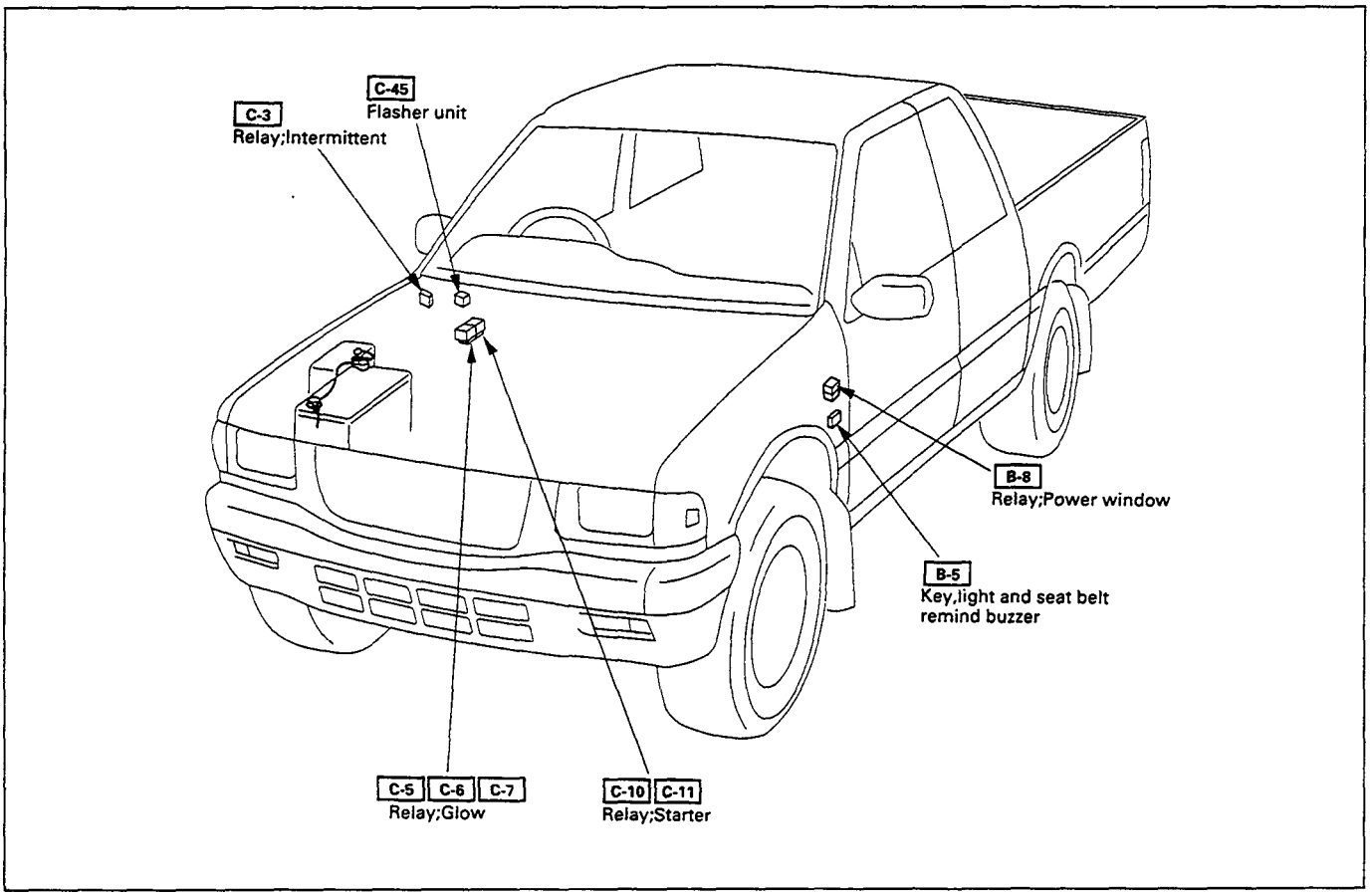

Connector No.	C-3	C-5	C-6	C-7	C-10	C-11	B-8
Relay / Engine model	WINDSHIELD INTERMITTENT	GLOW			STARTER		POWER WINDOW
4Z Series	O	–			–		O
4J Series	O	O			O		O

DIODE LOCATION

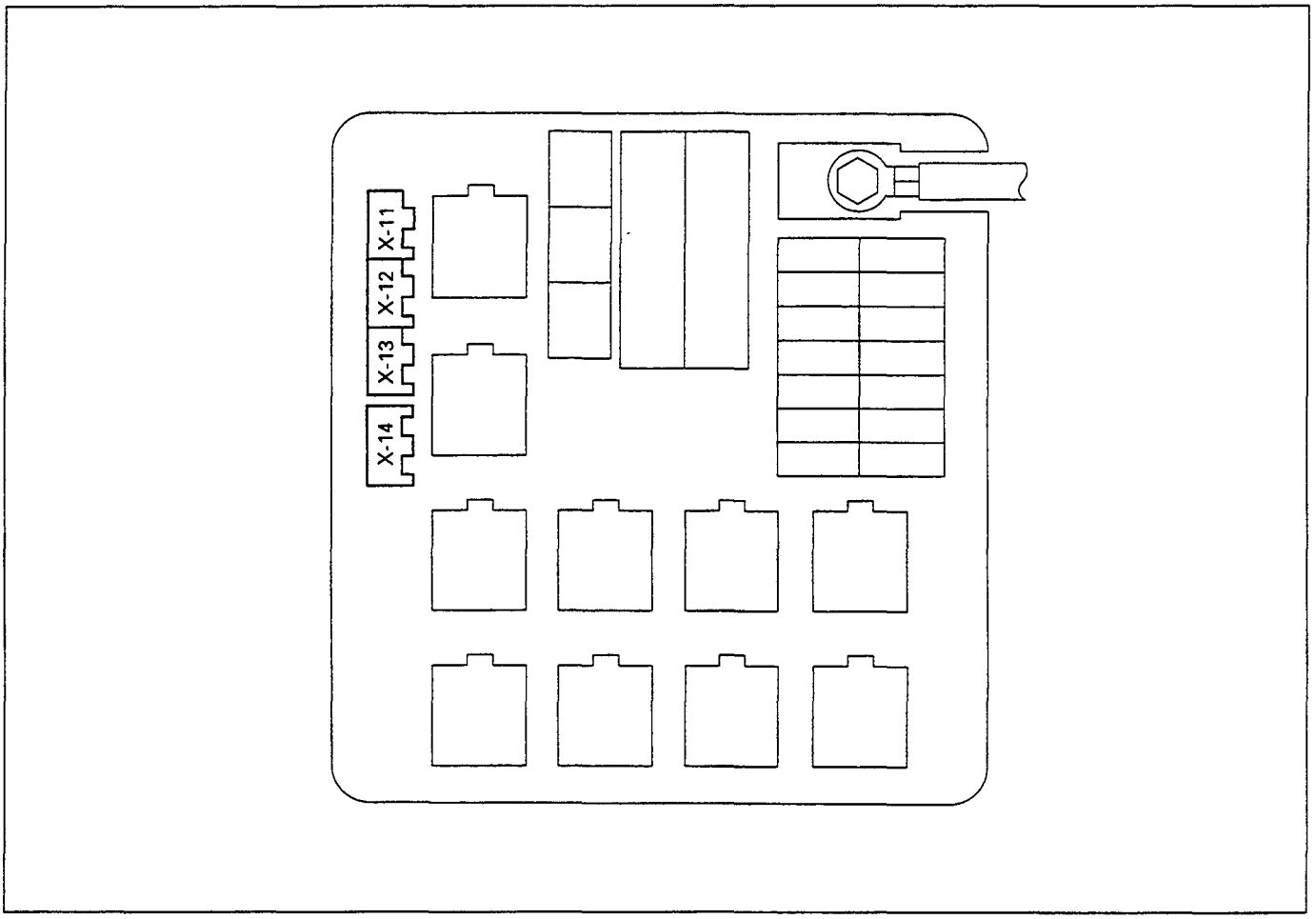

FUSE BOX (RHD)

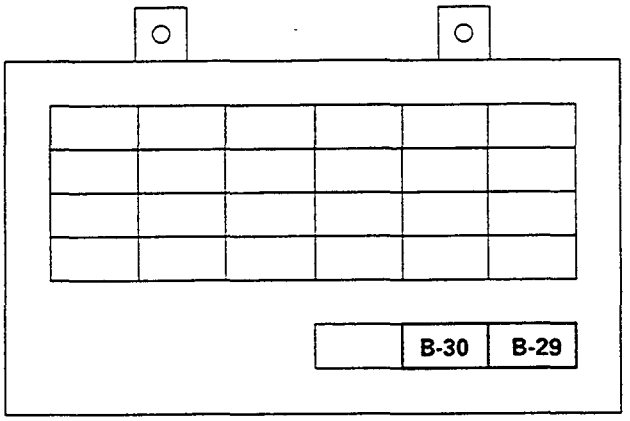

Connector No.	X-11	X-12	X-13	X-14	B-29	B-30
Usage / Engine model	-	-	-	-	-	Buzzer warning
4Z Series	-	-	-	-	-	O
4J Series	-	-	-	-	-	O

FUSE BLOCK CIRCUIT
PETROL ENGINE EXCEPT 4ZE1 (MPI) ENGINE

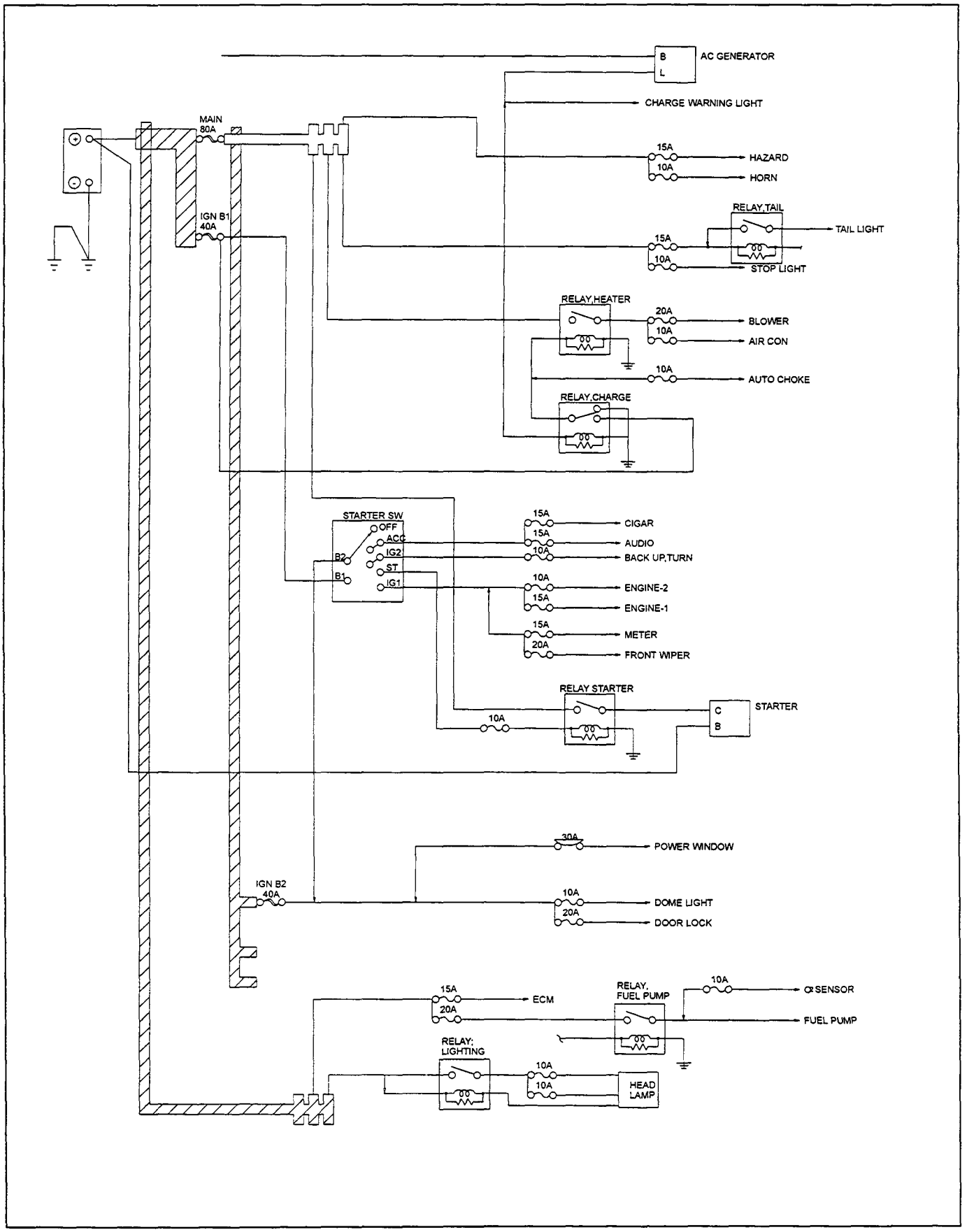

FUSE BLOCK CIRCUIT
DIESEL ENGINE

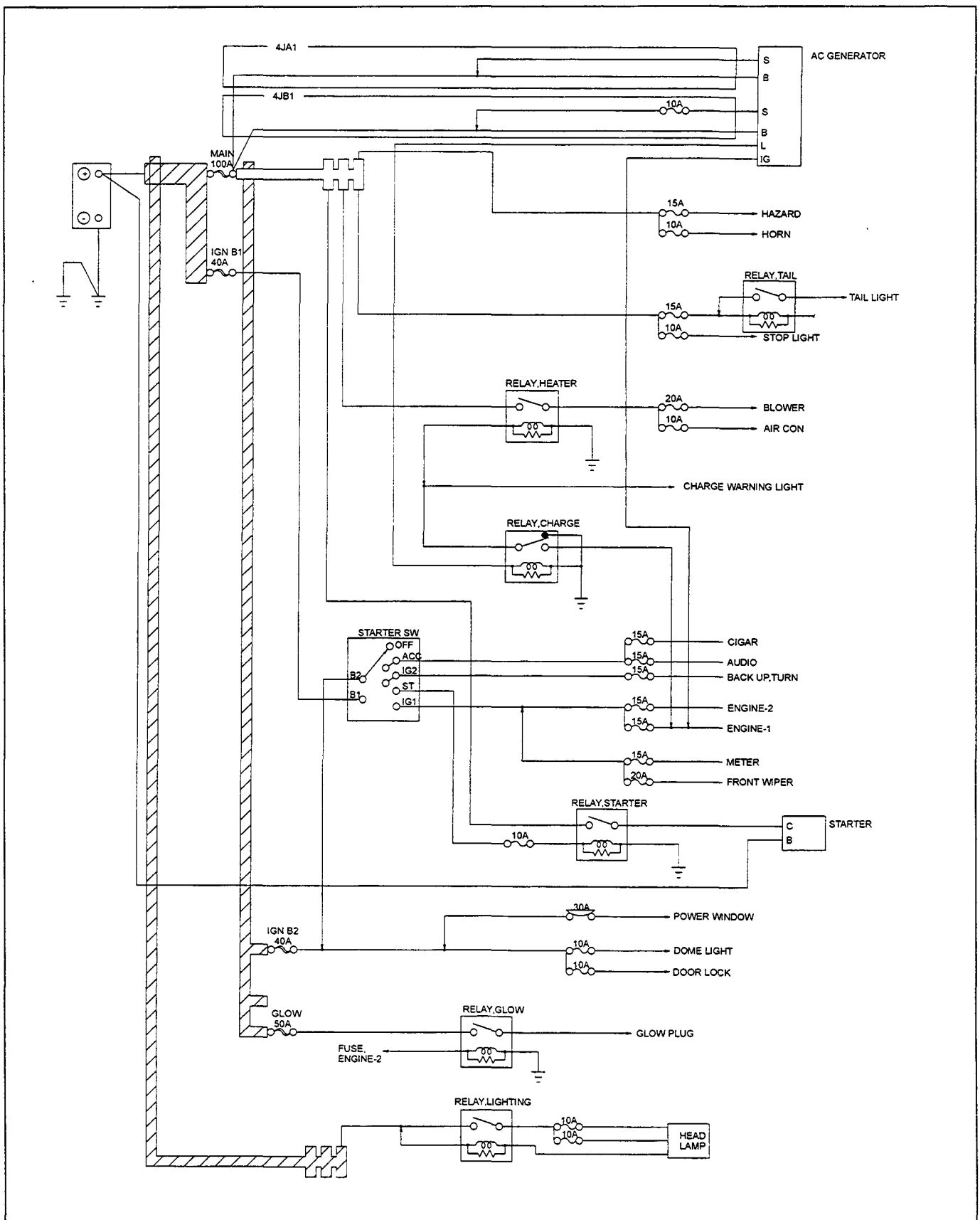

REFERENCE TABLE OF FUSE, FUSIBLE LINK AND CIRCUIT BREAKER - PERTOL ENGINE

FUSE
(Relay and fuse box)

Fuse No.	Capacity	Indication on label	Parts (load)
EB-1	15A	HAZARD	Hazard SW, Flasher unit
EB-2	10A	HORN	Horn relay, Horn SW, Horn
EB-3	-	-	-
EB-4	20A	BLOWER	Blower motor, A/C thermo relay, Blower resistor
EB-5	10A	AIR CON.	Pressure SW, A/C SW, Electrical thermostat, Fan SW, Magnetic clutch, FICD, A/C thermo relay
EB-6	-	-	-
EB-8	10A	H/LAMP-LH	Headlight-LH, High beam indicator light, Dimmer - passing SW
EB-9	10A	H/LAMP-RH	Headlight-RH, Dimmer - passing SW
EB-10	-	-	-
EB-11	10A	STOP	Stop light SW, Stop light, High mounted stop light
EB-12	15A	TAIL	Tail relay, Clearance light, Tail light, License plate light, Illumination controller, Illumination lights, Lighting SW
EB-14	10A	AUTO CHOKE	Auto choke (4ZD1 (CARB)), Vent SW valve (4ZD1 (CARB))

FUSE
(Fuse box)

Fuse No.	Capacity	Indication on label	Parts (load)
CB-1	10A	STARTER	Starter relay, ST. cut relay (4ZE1 (MPI)), ECM
CB-2	-	-	-
CB-3	15A	ENGINE-1	Ignition coil, Power SW, Distributor, Engine speed sensor
CB-4	10A	ENGINE-1	ECM main relay, Engine speed sensor, Slow cut solenoid (4ZD1 (CARB), 4ZE1 (CARB)), Neutral SW (4ZC1 (CARB), 4ZD1 (CARB)), Coasting richer (4ZC1 (CARB), 4ZD1 (CARB)), 2ND SW (4ZD1 (CARB)), TOP-3RD SW (4ZD1 (CARB)), VSV; Air (4ZD1 (CARB)), Clutch SW (4ZD1 (CARB)), Accel SW (4ZD1 (CARB))
CB-5	15A	METER	Vehicle speed sensor, Meter gauges, Indicator and warning lights, Overdrive off relay (A/T), Overdrive solenoid (A/T), Overdrive off SW (A/T), Key, Light & seat belt remind buzzer (SOUTH AFRICA), RR defogger relay, RR defogger SW, AC generator, Seat belt SW (SOUTH AFRICA)
CB-6	10A	DIFF LOCK	Diff lock switch, Diff, Solenoid
CB-7	15A	AUDIO	Audio
CB-9	5A	CELL IGN	Ignition switch
CB-10	10A	TOW AUX	Tow plug, Combination lamps
CB-11	20A	WIPER	Windshield wiper & washer SW Windshield wiper motor, Windshield washer motor, Windshield intermittent relay
CB-12	15A	BACK UP, TURN	Power window relay, FRT power window & door lock SW-driver side, RR power window SW, Hazard SW, Flasher unit, Turn signal SW, Back up light SW (M/T), Back up light, Mode SW (A/T)
CB-13	10A	DOME LIGHT	Dome light, Spot light, Door SW, Audio, Clock
CB-14	20A	DOOR LOCK	FRT power window & door lock SW-driver side, Door lock SW-driver side, Door lock actuator
CB-15	10A	DRIVING LIGHT	Driving light switch, Driving lights, Driving light relay, Combination switch

Fuse No.	Capacity	Indication on label	Parts (load)
CB-16	-	-	-
CB-17	5A	CELL EARTH (option)	Cell earth to LHD kick panel
CB-18	-	-	-
CB-19	15A	CIGAR	Cigarette lighter, Clock
CB-20	-	-	-
CB-21	-	-	-
CB-22	-	-	-
CB-23	5A	CELL POS (option)	Fuse box
CB-24	10A	V.S.S. VEHICLE SECURITY SYSTEM	V.S.S. unit, AM key/jack plug, LED, Anti hijack (option) Ultrasonic signal (option), Central door locking, CDL unit, Turn signal left/right, Speed sensor, V.S.S. bonnet switch, Alarm horn (option), Relay starter, Program option connector, Mechanical door switch, Room lamp

FUSIBLE LINK
(Relay and fuse box)

Fuse Link No.	Capacity	Indication on label
EB-15	40A	IGN. B1
EB-16	80A	MAIN
EB-17	-	-
EB-18	-	-
EB-19	40A	IGN. B2, POWER

CIRCUIT BREAKER
(Fuse box)

Fuse No.	Capacity	Indication on label	Parts (load)
B-31	30A	(POWER WINDOW)	Power window & door lock SW, Power window motor, Power window relay

DIESEL ENGINE
FUSE
(Relay and fuse box)

Fuse Link No.	Capacity	Indication on label	Parts (load)
EB-1	15A	HAZARD	Hazard SW, Flasher unit
EB-2	10A	HORN	Horn relay, horn SW, Horn
EB-3	–	–	–
EB-4	20A	BLOWER	Blower motor, A/C thermo relay, Blower resistor
EB-5	10A	AIR CON.	Pressure SW, A/C SW, Electronic thermostat, Fan SW, Magnetic clutch, VSV, FICD, A/C thermo relay
EB-6	–	–	–
EB-7	10A	(CHARGE)	AC generator, Charge relay
EB-8	10A	H/LAMP-LH	Headlight-LH, High beam indicator light, Dimmer • passing SW
EB-9	10A	H/LAMP-RH	Headlight-RH, Dimmer • passing SW
EB-10	–	–	–
EB-11	10A	STOP	Stop light SW, Stop light, High mounted stop light
EB-12	15A	TAIL	Tail relay, Clearance light, Tail light, License plate light, Illumination lights, Lighting SW, Illumination controller
EB-13	–	–	–
EB-14	–	–	–

FUSE
(Fuse box)

Fuse No.	Capacity	Indication on label	Parts (load)
CB-1	10A	STARTER	QOS-II control unit, Starter relay, ST. cut relay (4JA1)
CB-2	-	-	-
CB-3	15A	ENGINE-1	CSD relay, Fuel cut solenoid, Thermo SW, CSD solenoid, AC generator, Charge relay
CB-4	10A	ENGINE-2	QOS-II control unit, Glow relay
CB-5	15A	METER	Vehicle speed sensor, Meter gauges, Indicator and warning lights, QOS-II control unit, RR defogger relay, RR defogger SW, Key, light & seat belt remind buzzer (SOUTH AFRICA), Seat belt SW (SOUTH AFRICA)
CB-6	10A	DIFF LOCK	Diff lock switch, Diff, Solenoid
CB-7	15A	AUDIO	Audio, Door mirror control SW, Mirror
CB-9	5A	CELL IGN	Ignition switch
CB-10	10A	TOW AUX	Tow plug, Combination lamps
CB-11	20A	WIPER	Windshield wiper & washer SW Windshield wiper motor, Windshield washer motor, Windshield intermittent relay
CB-12	15A	BACK UP, TURN	Power window relay, FRT power window & door lock SW-driver side, RR power window SW, Hazard SW, Flasher unit, Turn signal SW, Back up light SW (M/T), Back up light, Mode SW (A/T)
CB-13	10A	DOME LIGHT	Dome light, Spot light, Door SW, Audio, Clock
CB-14	20A	DOOR LOCK	FRT power window & door lock SW-driver side, Door lock SW-driver side, Door lock actuator
CB-15	10A	DRIVING LIGHT	Driving light switch, Driving lights, Driving light relay, Combination switch
CB-16	-	-	-
CB-17	5A	CELL EARTH (option)	Cell earth to LHD kick panel
CB-18	-	-	-
CB-19	15A	CIGAR	Cigarette lighter, Clock

Fuse No.	Capacity	Indication on label	Parts (load)
CB-21	-	-	-
CB-22	-	-	-
CB-23	5A	CELL POS (option)	Fuse box
CB-24	10A	V.S.S. VEHICLE SECURITY SYSTEM	V.S.S. unit, AM key/jack plug, LED, Anti hijack (option), Ultrasonic signal (option), Central door locking, CDL unit, Turn signal left/right, Speed sensor, V.S.S. bonnet switch, Alarm horn (option), Relay starter, Program option connector, Mechanical door switch, Room lamp

FUSIBLE LINK
(Relay and fuse box)

Fuse Link No.	Capacity	Indication on label
EB-15	40A	IGN. B1
EB-16	100A	MAIN
EB-17	-	-
EB-18	-	-
EB-19	40A	IGN. B2, POWER

CIRCUIT BREAKER
(Fuse box)

Fuse No.	Capacity	Indication on label	Parts (load)
B-31	30A	(POWER WINDOW)	Power window & door lock SW, Power window motor, Power window relay

GROUNDING POINT REFERENCE TABLE (PETROL ENGINE)

Connector No.	Cable harness	Location	Parts (load)
B-9	Body harness	Body-LH	Fan SW, FRT power window & door lock SW-passenger side, RR power window SW, Key, light & seat belt remind buzzer (SOUTH AFRICA)
B-28		Body-RH	Illumination light (Meter, Heater & A/C control panel, Cigarette lighter, Ashtray, RR defogger SW, Audio, Hazard SW), Illumination controller, Turn signal indicator light, Power window relay, Door mirror control SW, RR defogger, RR defogger SW, Door lock SW-driver side, Audio, Clock, Cigarette lighter
C-2	Engine room harness	Fender-RH	Vehicle speed sensor, 4WD SW, Brake fluid level SW, Heater relay, Dimmer-passenger SW, Lighter SW, Overdriver off SW (4ZE1, A/T), Charge relay, Idle SW (4ZE1), Accel SW (4ZC1, 4ZD1), Engine speed sensor, Starter relay, Windshield intermittent relay, ST. cut relay (4ZE1, A/T), Windshield wiper motor, Flasher unit, Side turn signal light-RH, Mode SW (4ZE1, A/T)
C-36		Fender-LH	Speedometer, Fuel tank unit, Tachometer (W/Tachometer), Engine coolant temperature gauge (W/Tachometer), Fuel gauge, Clearance light, Seat belt SW (SOUTH AFRICA), Windshield washer motor, Side turn signal light-LH, FRT turn signal light
F-3	Chassis harness	Frame	Tail light, License plate light, Fuel pump, Stop light, RR turn signal light, Back up light

(DIESEL ENGINE)

Connector No.	Cable harness	Location	Parts (Load)
B-9	Body harness	Body-LH	Fan SW, FRT power window & door lock SW-passenger side, RR power window SW, Key, light & seat belt remind buzzer (SOUTH AFRICA)
B-28		Body-RH	Turn signal indicator light, Illumination light (Meter, Heater & A/C control panel, Cigarette lighter, Ashtray, RR defogger SW, Audio, Hazard SW), Illumination controller, FRT power window & door lock SW-driver side, Power window relay, Door mirror control SW, RR defogger, RR defogger SW, FRT door lock SW-driver side, Audio, Clock, Cigarette lighter
C-2	Engine room harness	Fender-RH	Vehicle speed sensor, 4WD SW, Brake fluid level SW, Tacho sensor, Heater relay, VSV; FICD, Dimmer-passing SW, Lighting SW, QOS-II control unit, Starter relay, Charge relay, Windshield intermittent relay, Windshield wiper motor, ST. cut relay (4JA1, SOUTH AFRICA), Side turn signal light-RH, Flasher unit
C-36		Fender-LH	Speedometer, Fuel tank unit, Fuel filter SW, Tachometer (W/Tachometer), Engine coolant temperature gauge (W/Tachometer), Fuel gauge, Timing belt warning light, Fuel filter SW, Clearance light, Seat belt SW (SOUTH AFRICA), Windshield washer motor, Side turn signal light-LH, FRT turn signal light
F-3	Chassis harness	Frame	Tail light, License plate light, Stop light, RR turn signal light, Back up light

GROUNDING POINT LOCATION

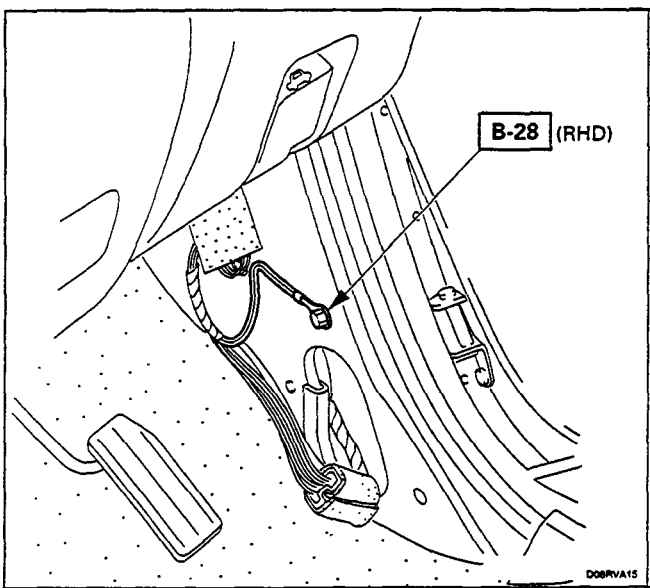

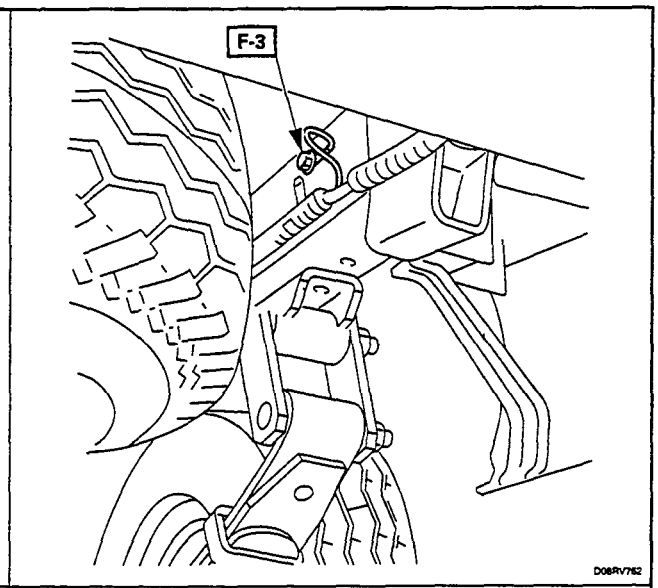

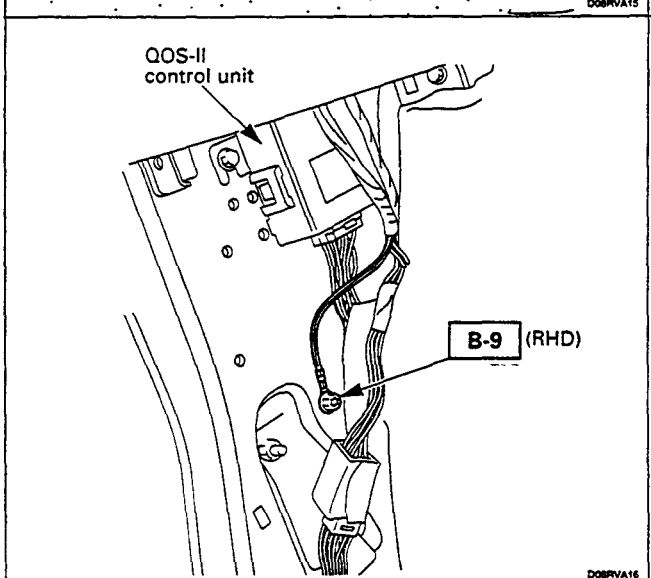

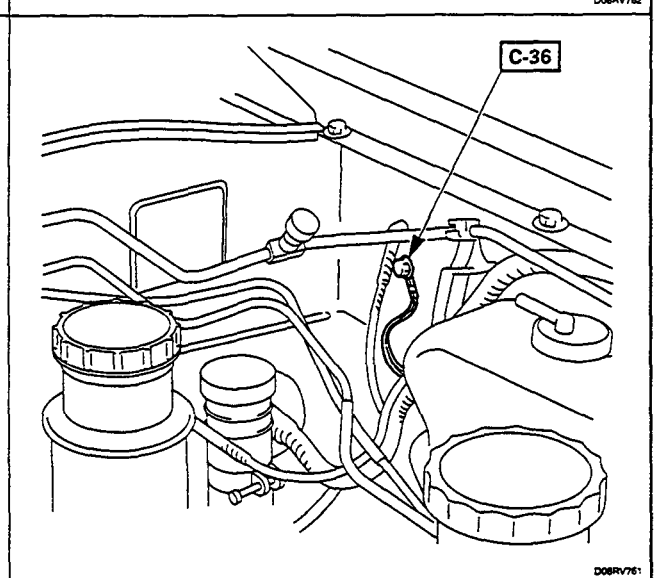

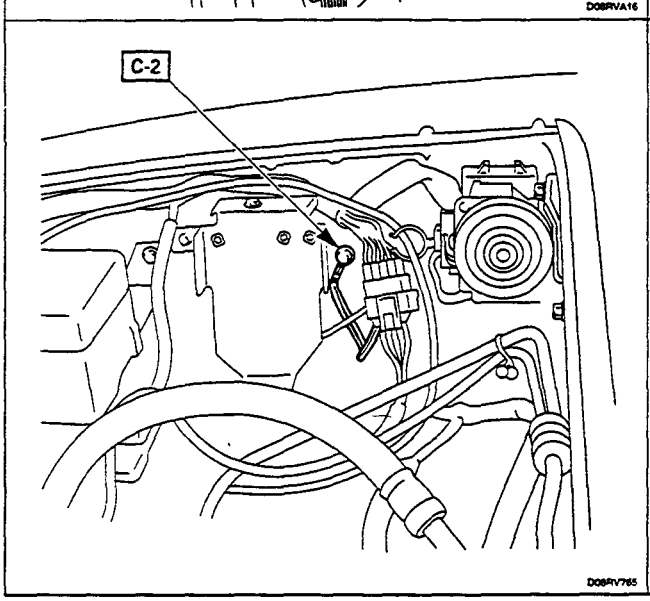

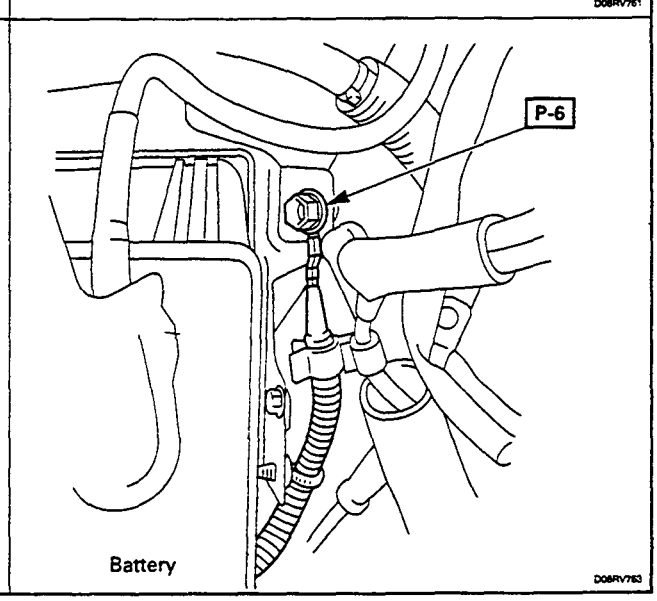

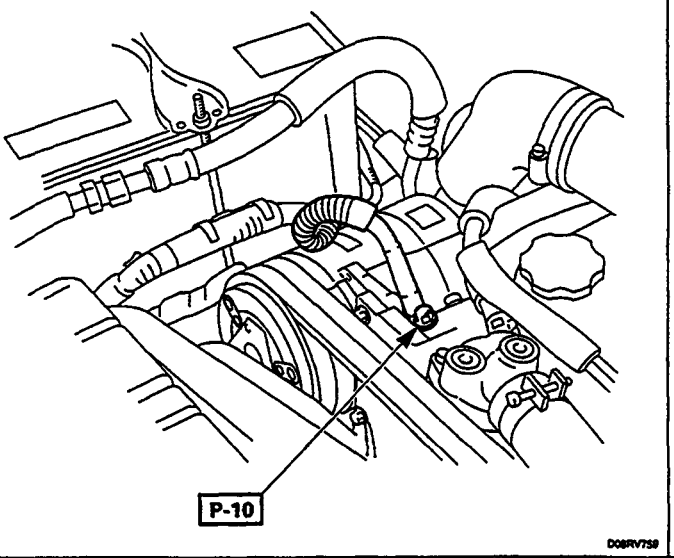
P-10
D08RV759

MAIN CABLE HARNESS ROUTING

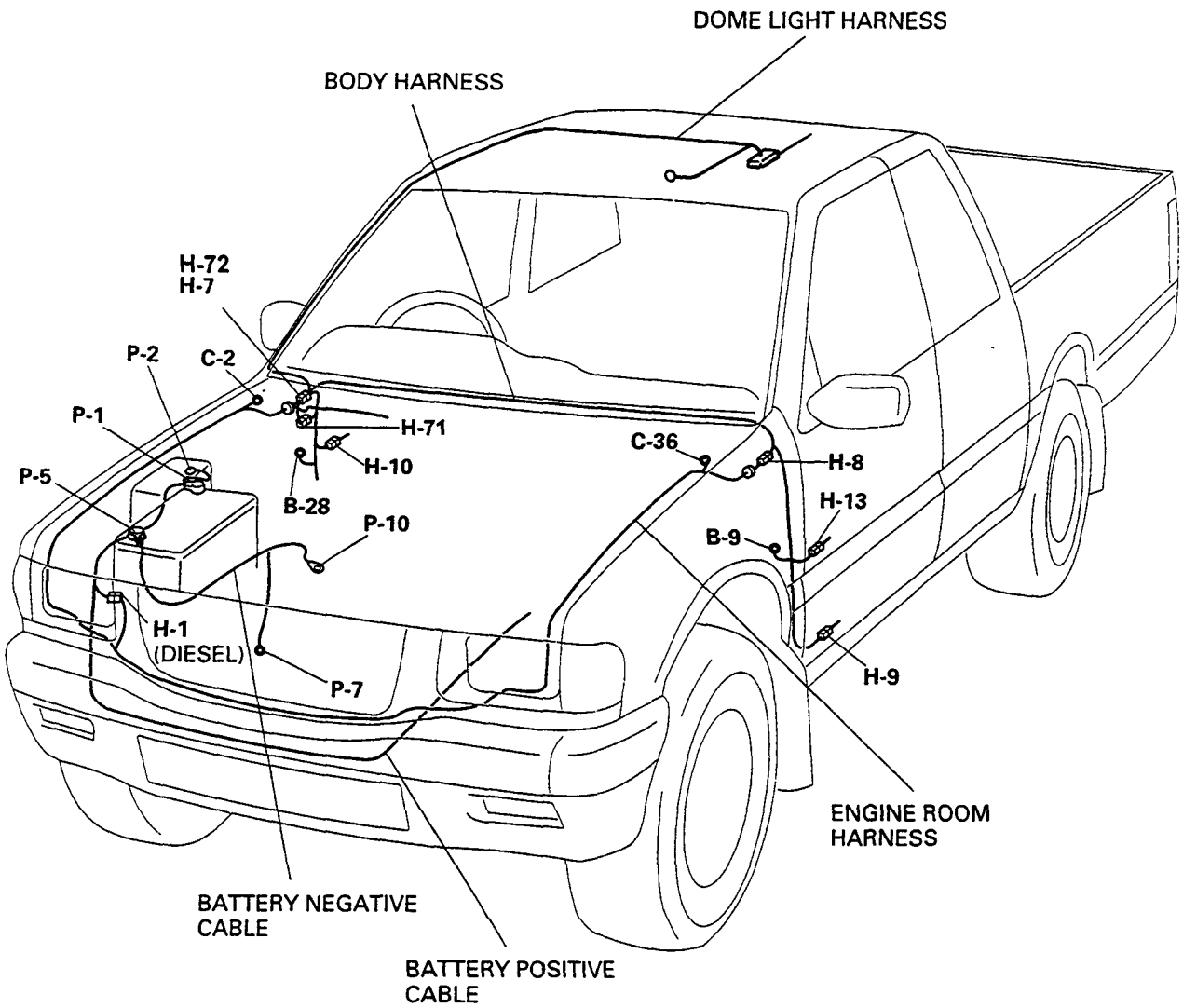

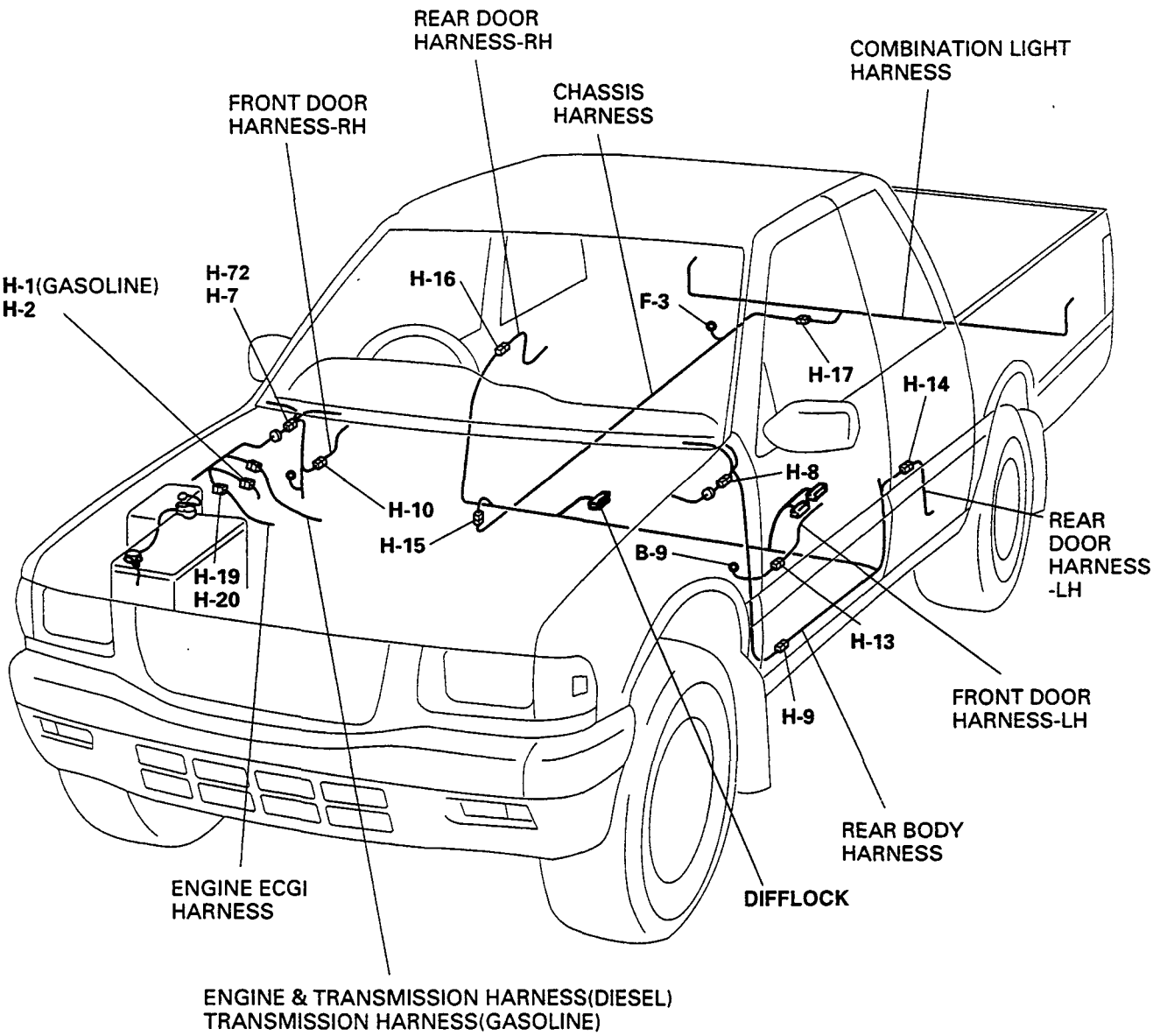
REAR DOOR
HARNESS-RH
COMBINATION LIGHT
HARNESS
CHASSIS
HARNESS
FRONT DOOR
HARNESS-RH
H-1(GASOLINE)
H-2
H-72
H-7
H-16
F-3
H-17
H-14
H-8
H-10
H-15
B-9
H-19
H-20
REAR
DOOR
HARNESS
-LH
H-13
H-9
FRONT DOOR
HARNESS-LH
REAR BODY
HARNESS
DIFFLOCK
ENGINE ECGI
HARNESS
ENGINE & TRANSMISSION HARNESS(DIESEL)
TRANSMISSION HARNESS(GASOLINE)

SYSTEM REPAIR

START AND CHARGING

PARTS LOCATION (PETROL ENGINE)

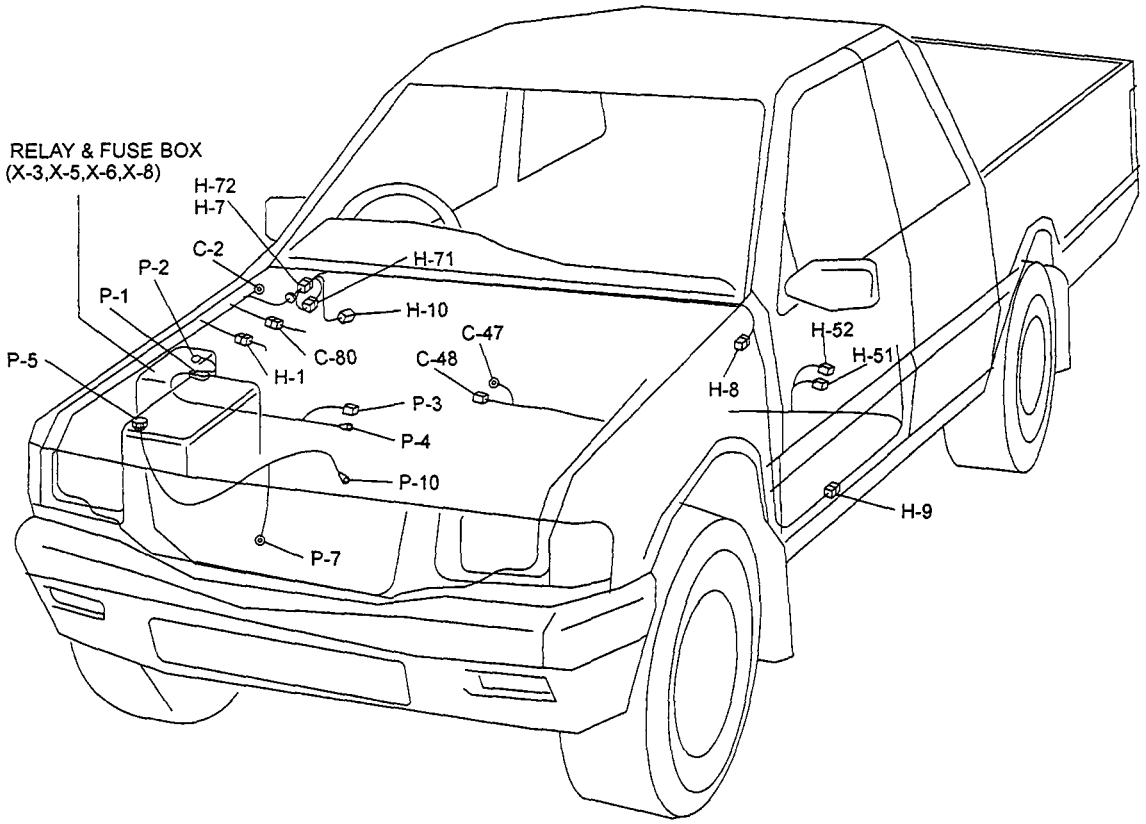

CIRCUIT DIAGRAM FOR START AND CHARGE

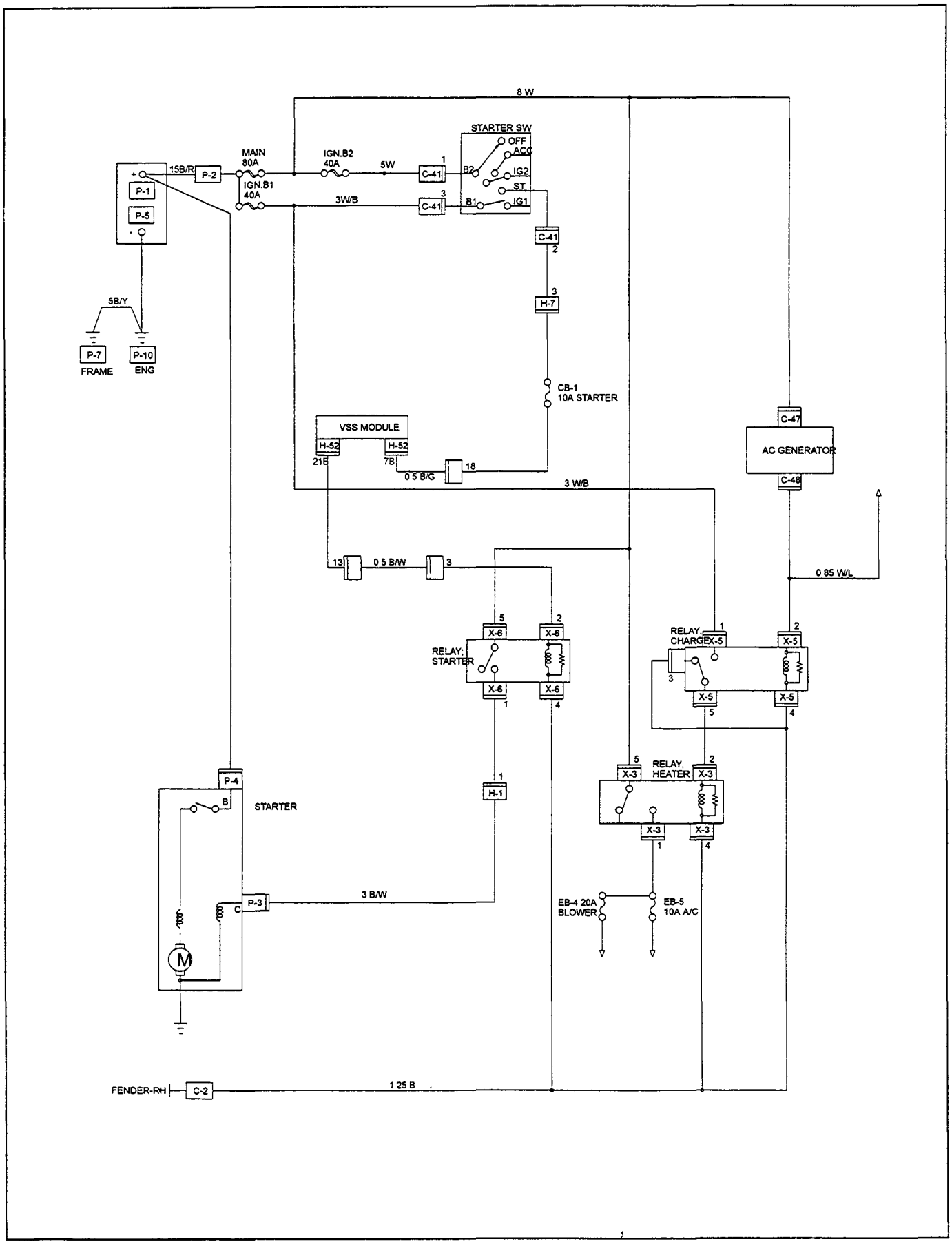

PARTS LOCATION (DIESEL ENGINE)

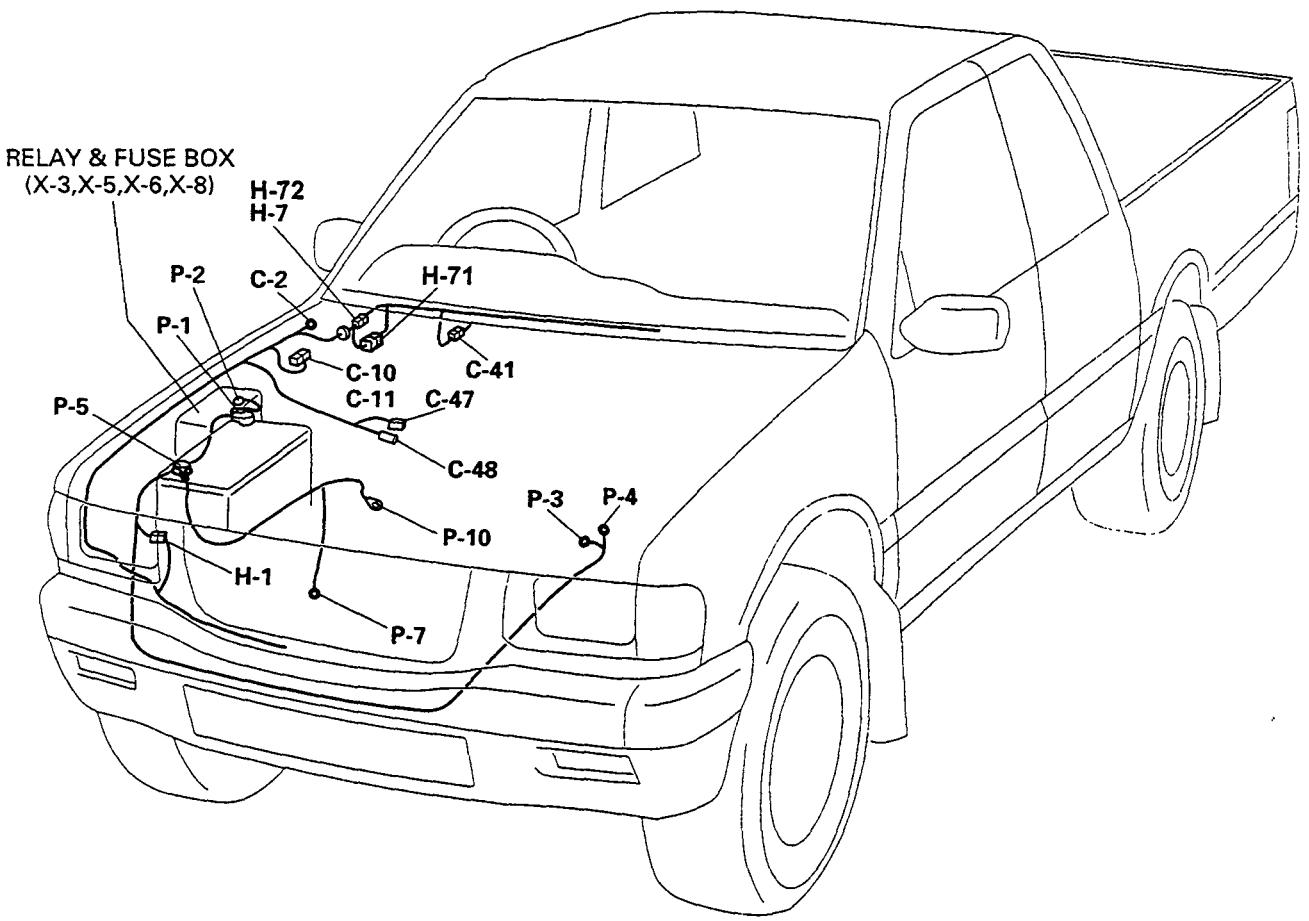

CIRCUIT DIAGRAM (DIESEL ENGINE)

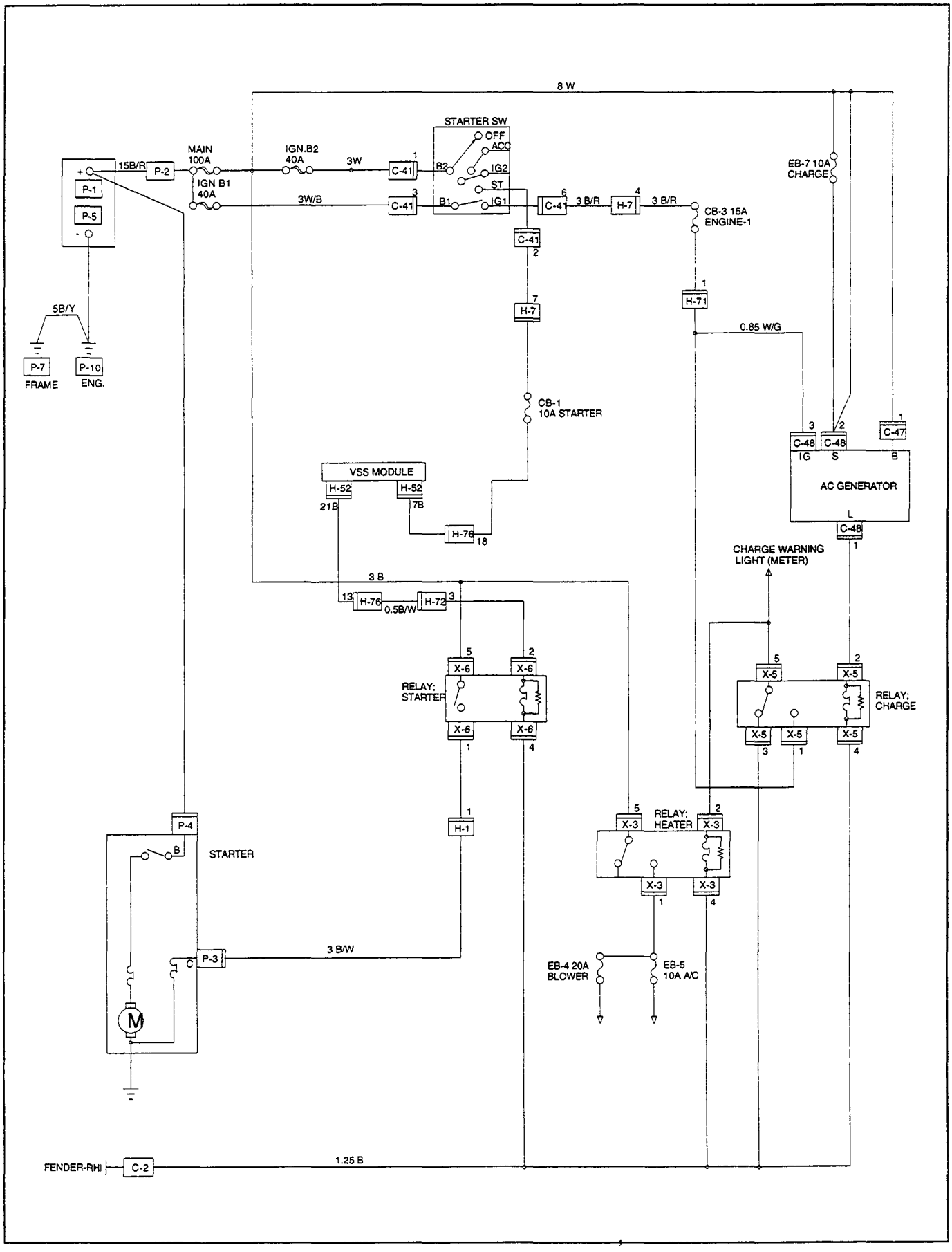

CIRCUIT DIAGRAM (4JA1 DIESEL ENGINE)

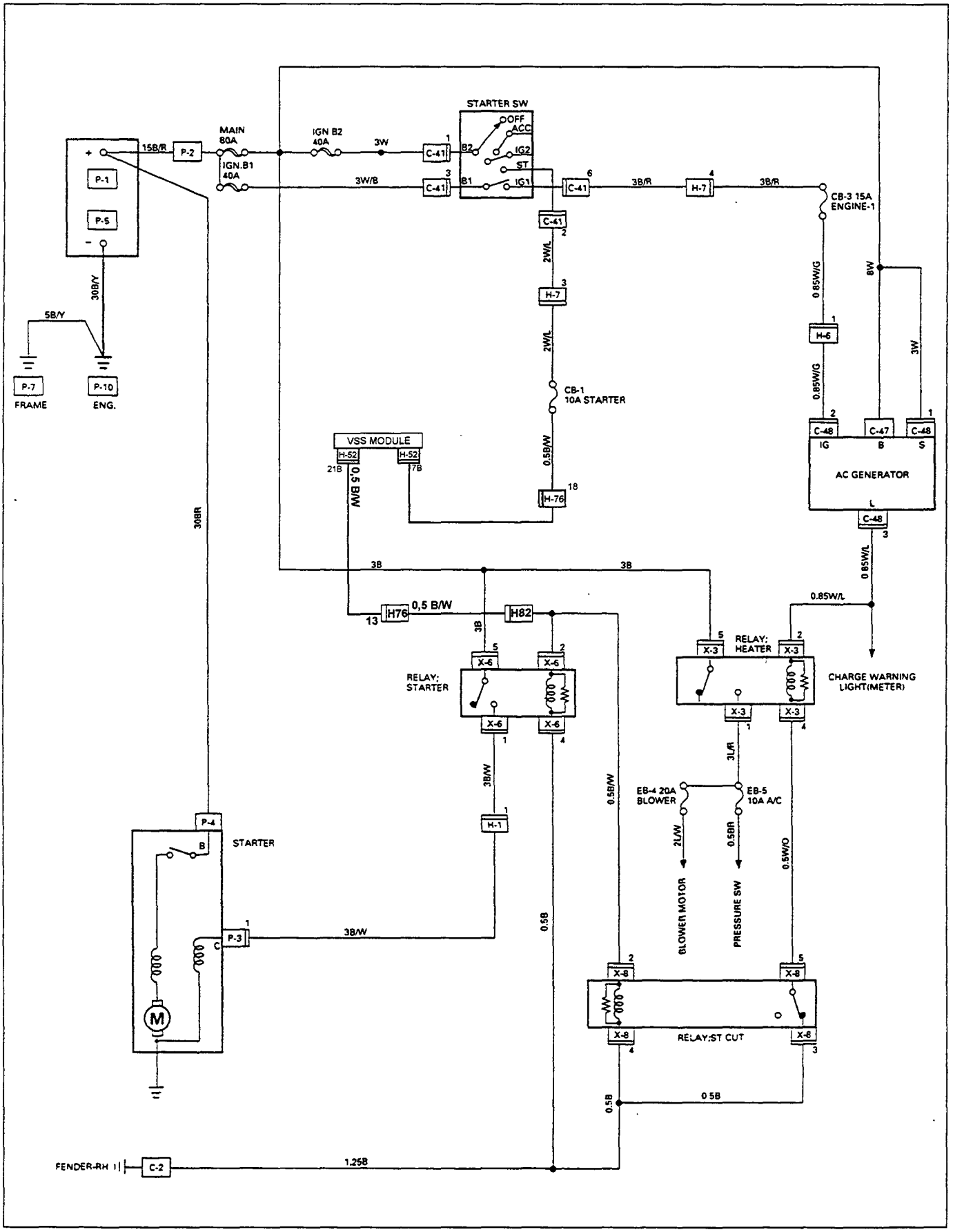

REMOVAL AND INSTALLATION

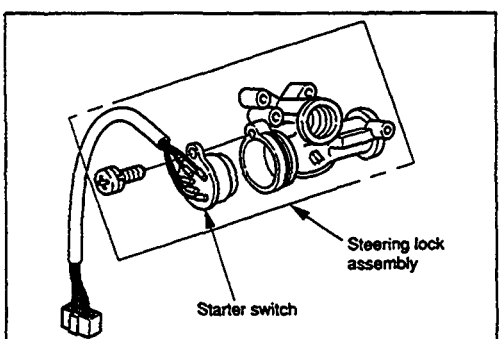

730RS005

STARTER SWITCH

Removal

1. **Steering Lock Assembly**
   - Refer to Section 3B" STEERING COLUMN" for steering lock assembly removal steps.
2. **Starter Switch**

Installation

Follow the removal procedure in the reverse order to install the starter switch.

INSPECTION AND REPAIR

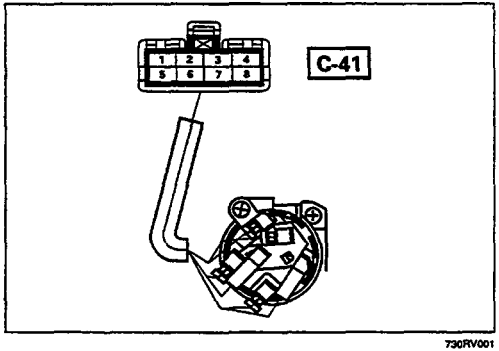

730RV001

STARTER SWITCH

Switch Connections

Starter switch key position \ Terminal No.		1 (B2)	4 (ACC)	8 (IG2)	2 (ST)	3 (B1)	6 (IG1)
LOCK	Removed						
	Inserted						
OFF							
ACC		○	○				
ON		○	○	○		○	○
START		○		○	○	○	○

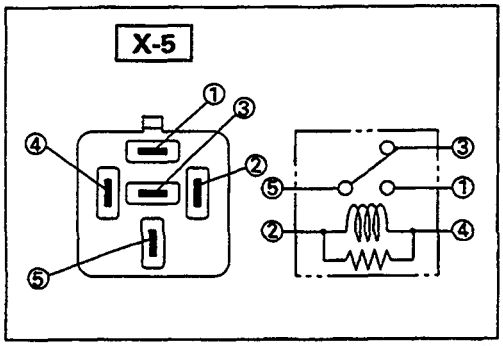

Charge relay (Diesel engine)

Check continuity between the relay terminals.

③ – ⑤ ..... Continuity
① – ⑤ ..... No continuity

(When battery voltage is applied between ② and ④)

③ – ⑤ ..... No continuity
① – ⑤ ..... Continuity

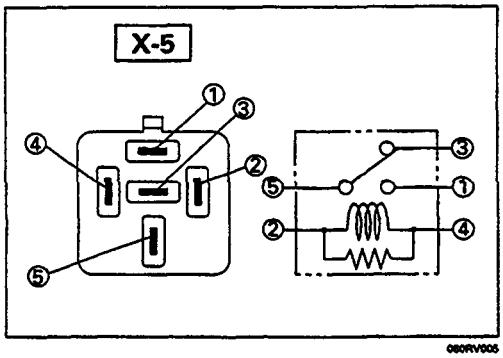

Charge relay (Gasoline engine except 4ZE1 (MPI))

Check continuity between the relay terminals.

① – ⑤ ..... No continuity

(When battery voltage is applied between ② and ④)

① – ⑤ ..... Continuity

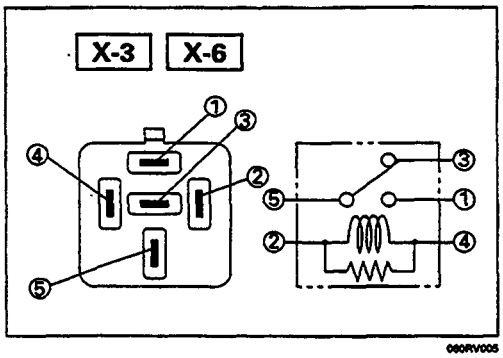

Starter relay (Gasoline engine), Heater relay

Check continuity between the relay terminals.

① – ⑤ ..... No continuity

(When battery voltage is applied between ② and ④)

① – ⑤ ..... Continuity

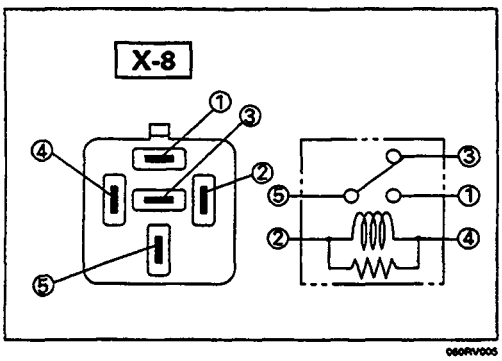

St. cut relay

Check continuity between the relay terminals.

③ – ⑤ ..... Continuity

(When battery voltage is applied between ② and ④)

③ – ⑤ ..... No continuity

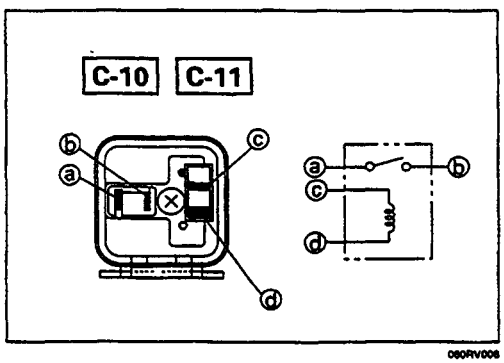

Starter relay (Diesel engine)

Check continuity between the relay terminals.

ⓐ – ⓑ ..... No continuity

(When battery voltage is applied between ⓒ and ⓓ)

ⓐ – ⓑ ..... Continuity

QOS SYSTEM (QUICK ON START)

PARTS LOCATION

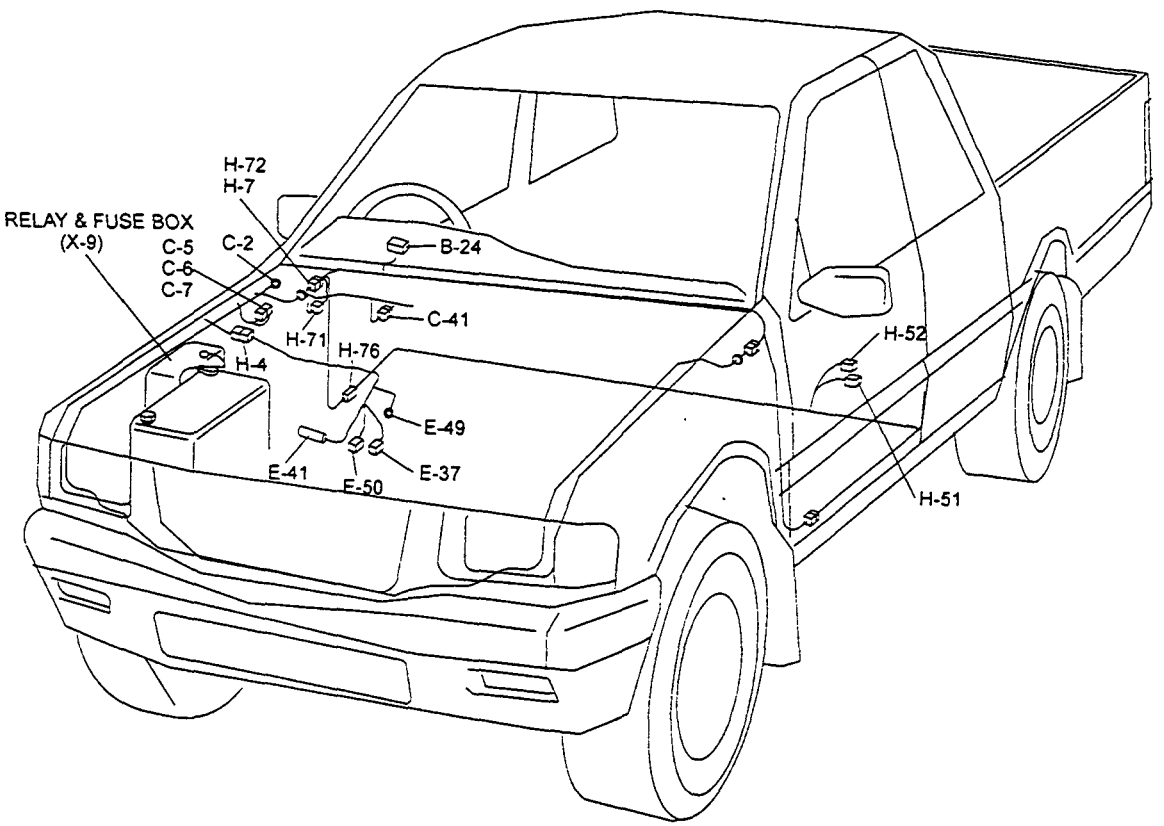

CIRCUIT DIAGRAM

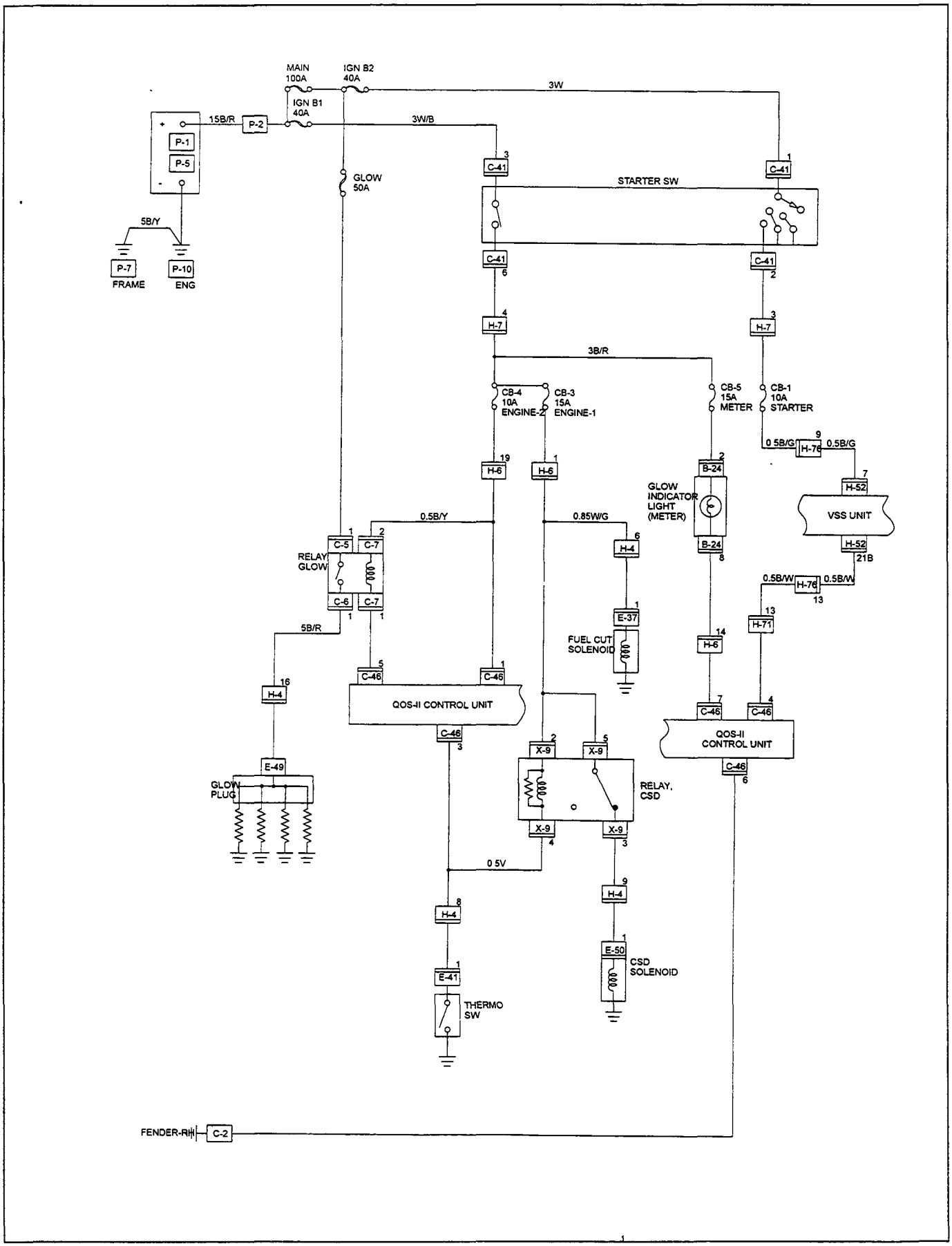

INSPECTION AND REPAIR

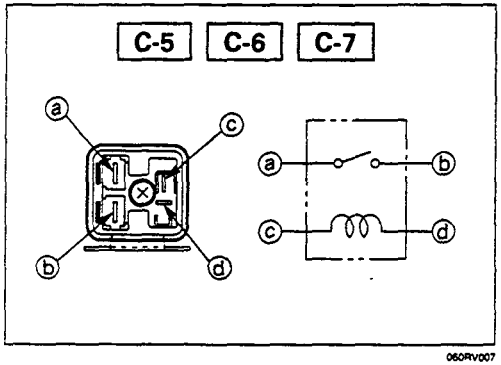

Glow relay

Check continuity between the relay terminals.

ⓐ – ⓑ . . . . . No continuity

(When battery voltage is applied between ⓒ and ⓓ)

ⓐ – ⓑ . . . . . Continuity

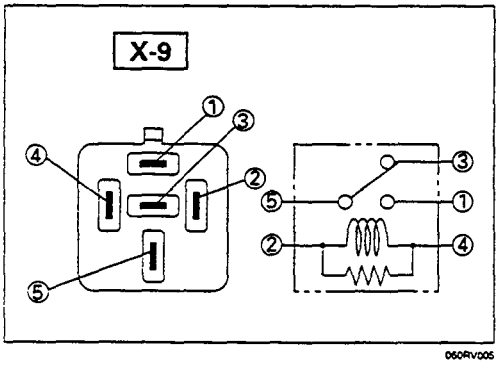

CSD relay

Check continuity between the relay terminals.

③ – ⑤ . . . . . Continuity

(When battery voltage is applied between ② and ④)

③ – ⑤ . . . . . No continuity

LIGHTING

PARTS LOCATION

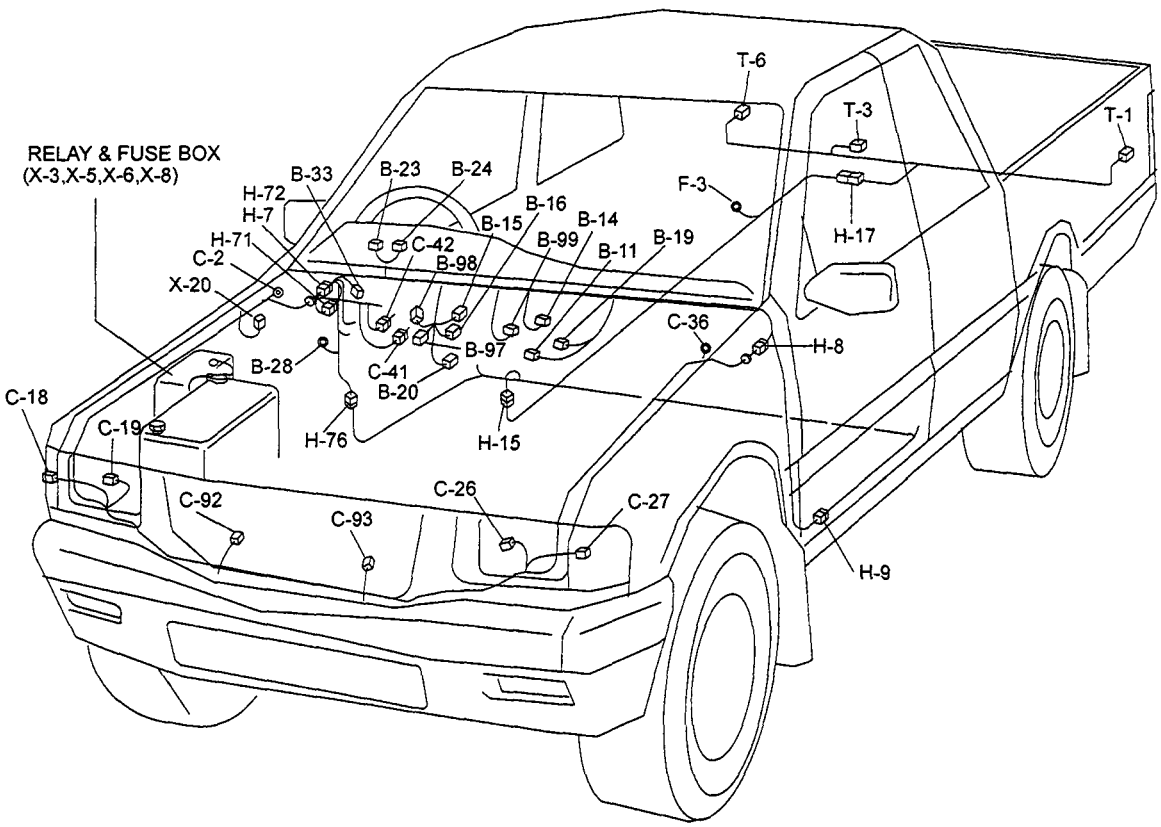

CIRCUIT DIAGRAM

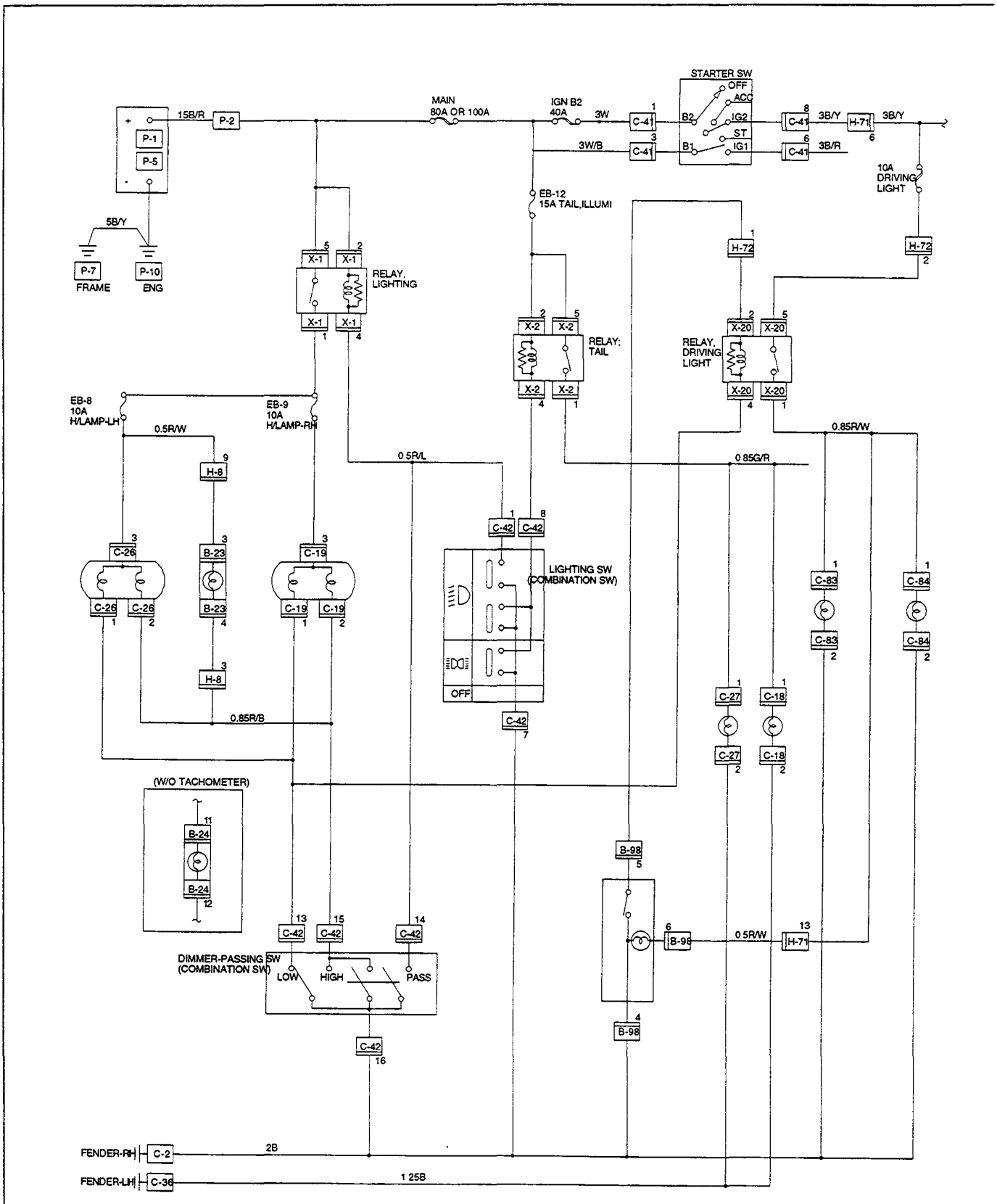

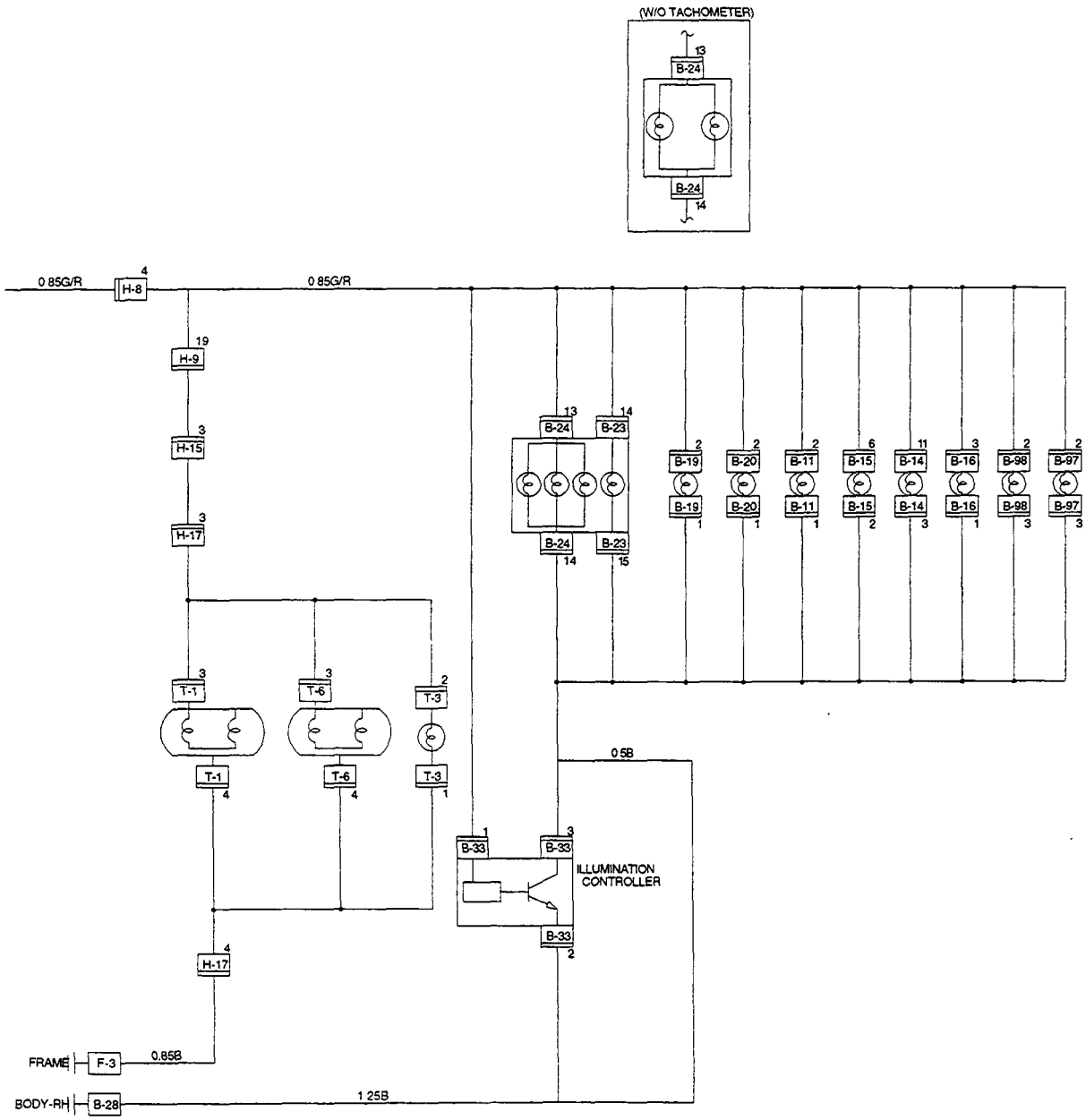
(W/O TACHOMETER)
13
B-24
B-24
14
0 85G/R
4
H-8
0 85G/R
19
H-9
3
H-15
3
H-17
13
B-24
14
B-23
B-24
14
B-23
15
2
B-19
B-19
1
2
B-20
B-20
1
2
B-11
B-11
1
6
B-15
B-15
2
11
B-14
B-14
3
3
B-16
B-16
1
2
B-98
B-98
3
2
B-97
B-97
3
3
T-1
T-1
4
3
T-6
T-6
4
2
T-3
T-3
1
0 5B
1
B-33
3
B-33
ILLUMINATION
CONTROLLER
B-33
2
4
H-17
FRAME
F-3
0.85B
BODY-RH
B-28
1 25B

TROUBLESHOOTING

HEADLIGHT

1. Both the headlights (high and low beam) do not light

Checkpoint		Trouble Cause	Countermeasure
Ground point contact (C-2)	NG	Poor ground point contact	Repair the wiring
OK			
Combination switch continuity	NG	Poor switch contact or sw faulty	Repair or replace the combination switch
OK			
Lighting relay	NG	Poor relay contact or relay faulty	Reinstall or replace the lighting relay
OK			
Voltage between 5 [X-1] - ground and 2 [X-1] - ground	NG	Open circuit between battery positive terminal and lighting relay	Repair open circuit
OK			
Voltage between 1 [C-42] - ground	NG	Open circuit between lighting relay and lighting switch	Repair open circuit or connector contact
OK			
Wiring continuity between 7 [C-42] - [C-2] and 16 [C-42] - [C-2]	NG	Open circuit	Repair open circuit

2. High or low beam does not light on both headlights

Checkpoint		Trouble Cause	Countermeasure
Dimmer · passing switch continuity	NG	Poor switch contact or switch faulty	Repair or replace the combination switch
OK			
Voltage between 13 C-42 - ground and 15 C-42 - ground	NG	Open circuit between headlight and dimmer · passing switch	Repair open circuit or connector contact

3. RH (or LH) high and low beam does not light

Fuse No. EB-8 (10A) or No. EB-9 (10A) (Relay and fuse box) (No. EB-9 RH, No. EB-8: LH)	NG	Poor installation or blown fuse	Reinstall or replace fuse No. EB-8 or No. EB-9
OK			
Headlight connector continuity	NG	Blown filament or air leakage	Replace the headlight bulb
OK			
Wiring continuity between connector 3 C-19 -fuse No. EB-9 or 3 C-26 -fuse No. EB-8	NG	Open circuit and/or poor connector contact	Repair or replace the wire and/or connector

4. High or low beam does not light on one headlight (RH or LH)

Headlight connector continuity	NG	Blown filament	Replace the headlight assembly
OK			
Wiring continuity between headlight and dimmer · passing switch	NG	Open circuit between headlight and dimmer · passing switch	Repair open circuit or connector contact

5. Headlight does not go out

Checkpoint		Trouble Cause	Countermeasure
Lighting relay continuity between connector 1 [X-1] - 5 [X-1] (Should be no continuity)	NG	Relay point fused	Replace the lighting relay
OK			
Lighting switch continuity between connector 1 [C-42] - 7 [C-42] when switch is OFF (Should be no continuity)	NG	Switch point fused or faulty	Replay the combination switch
OK			
Dimmer · passing switch continuity between connector 14 [C-42] - 16 [C-42] when switch is not operating (Should be no continuity)	NG	Switch point fused or faulty	Repair or replace the combination switch
OK			
Check if headlight goes out when connector [C-42] is disconnected	NG	Short circuit	Repair short circuit between 4 [X-1] - 1 [C-42] and 4 [X-1] - 14 [C-42]

6. Insufficient headlight brightness

Headlight lens	NG	Lens dirty	Clean the light lens
OK			
Headlight bulb	NG	Bulb filament faulty	Replace the headlight bulb
OK			
Dimmer · passing switch wire continuity between connector 16 [C-42] - [C-2]	NG	Poor ground point contact	Repair the wiring

7. Passing light does not function when dimmer switch is operated

Checkpoint		Trouble Cause	Countermeasure
Dimmer switch	NG	Poor switch point contact	Repair or replace the dimmer switch
OK			
Voltage between 14 C-42 - ground (Should be battery voltage present)	NG	Open circuit	Repair open circuit between 4 X-1 - 14 C-42

8. Headlight beam does not change when dimmer switch is operated

Dimmer switch	NG	Loose beam lever or foreign material in switch	Repair or replace the dimmer switch

TAIL LIGHT, LICENSE PLATE LIGHT, CLEARANCE LIGHT AND ILLUMINATION CONTROLLER

1. All lights do not light

Checkpoint		Trouble Cause	Countermeasure
Fuse No. EB-12 (15A, Relay and fuse box)	NG	Poor fuse contact or blown	Reinstall or replace the fuse No. EB-12
OK			
Lighting switch continuity between connector 8 C-42 - 7 C-42	NG	Poor switch point or connector contact	Repair or replace the combination switch
OK			
Tail relay	NG	Poor relay contact or relay faulty	Reinstall or replace the tail relay

2. Tail light does not light

Tail light bulb continuity	NG	Bulb burned out or poor connector contact	Replace the bulb or repair connector contact
OK			
Continuity between connector 3 T-6 - 4 T-6 (RH) or 3 T-1 - 4 T-1 (LH)	NG	Open circuit or poor connector contact	Repair open circuit or connector contact

3. License plate light does not light

Checkpoint		Trouble Cause	Countermeasure
License plate light bulb continuity	NG	Bulb burned out or poor connector contact	Replace the bulb or repair connector contact
OK			
Continuity between connector 1 [T-3] - 2 [T-3]	NG	Open circuit or poor connector contact	Repair open circuit or connector contact

4. Clearance light does not light

Clearance light bulb continuity	NG	Bulb burned out or poor connector contact	Replace the bulb or repair connector contact

5. Illumination controller does not operate

Disconnect the illumination controller connector (Light should be dim)	NG	Short circuit	Repair short circuit or replace the wire
OK			
Turn the illumination controller knob (Brightness should change)	NG	Loose knob or faulty controller	Repair knob installation or replace the controller

REMOVAL AND INSTALLATION

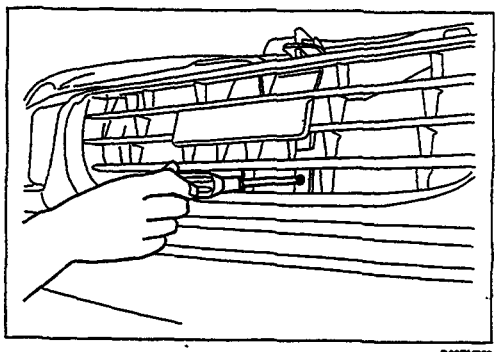

D08RV753

HEADLIGHT

Removal

1. Remove the radiator grille center bolt.

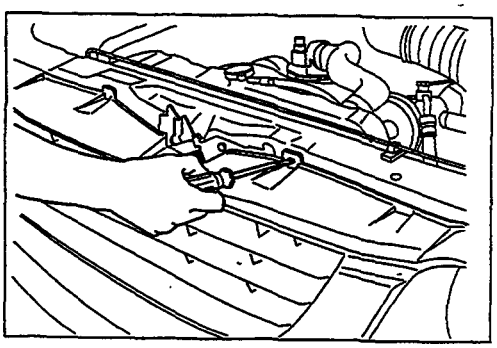

D08RV754

2. Use a screwdriver to raise the clip and release the lock.

   Place a clean rag beneath the screwdriver tip to protect the body painted surfaces.
3. Remove the radiator grille.

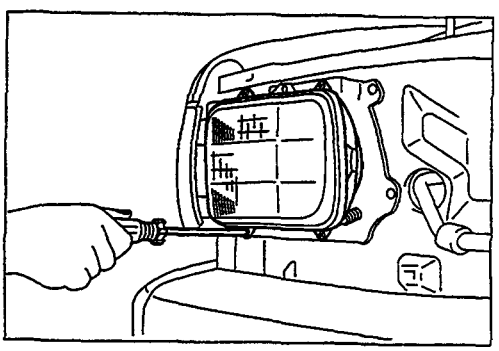

D08RV855

4. Remove the headlight rim.

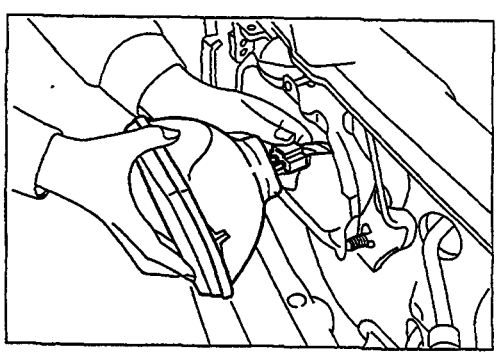

D08RV856

5. Disconnect the headlight connector.
6. Remove the headlight.

Installation

Follow the removal procedure in the reverse order to install the headlight.

Pay close attention to the important points mentioned in the following paragraphs.

Connector

Be absolutely sue that the headlight connector is securely connected.

This will prevent a contact and an open circuit.

LIGHTING SWITCH

Removal

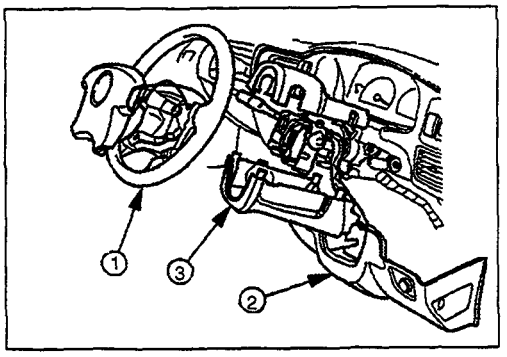

1. Remove the steering wheel (1).
2. Remove the Instrument panel lower cover (2).
3. Remove the steering column cover (3).

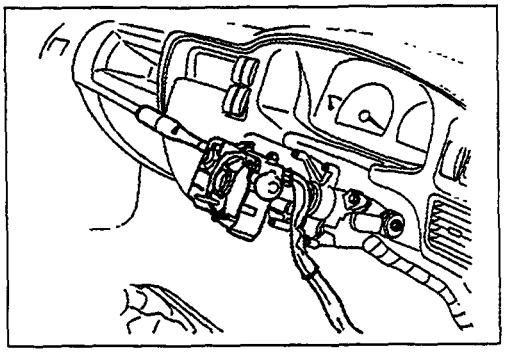

4. Disconnect the connector.
5. Remove the lighting switch from the steering shaft.

Installation

Follow the removal procedure in the reverse order to install the lighting switch.

Pay close attention to the important points mentioned in the following paragraphs.

Connector

Be absolutely sure that the lighting switch connector is securely connected.

This will prevent a poor contact and an open circuit.

Wire Harness

Do not pinch the wire harnesses between the cluster and the meter hood during the cluster installation procedure.

Wire damage will result.

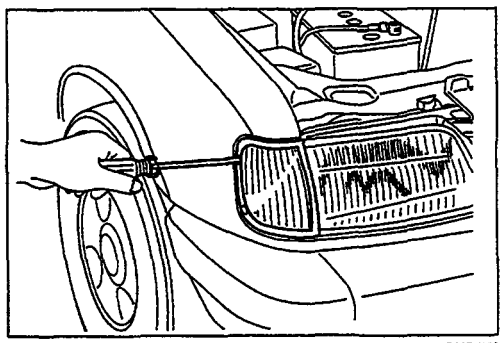

D08RV859

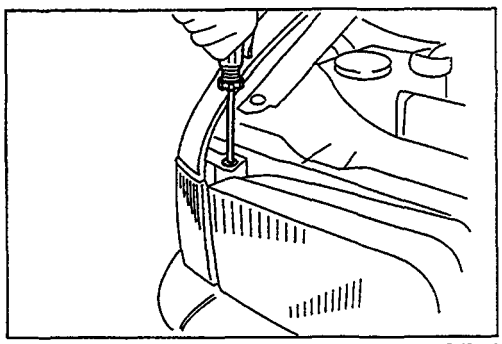

D08RV860

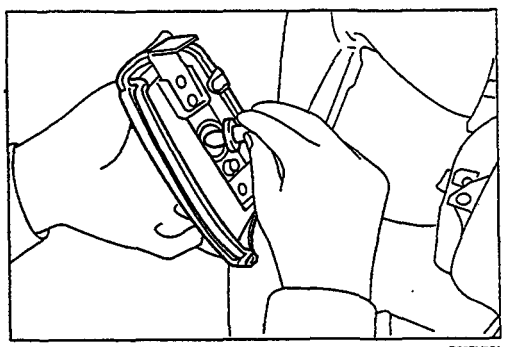

D08RV861

CLEARANCE LIGHT

Removal

1. Remove the radiator grille. (Refer to headlight removal procedure.)
2. Remove the side screws.
3. Remove the top screw.
4. Turn the socket counterclockwise to disconnect it from the clearance light housing.
5. Pull the bulb from the socket.

Installation

Follow the removal procedure in the reverse order to install the clearance light.

Pay close attention to the important points mentioned in the following paragraphs.

Connector

Be absolutely sure that the clearance light connector is securely connected.

This will prevent a poor contact and an open circuit.

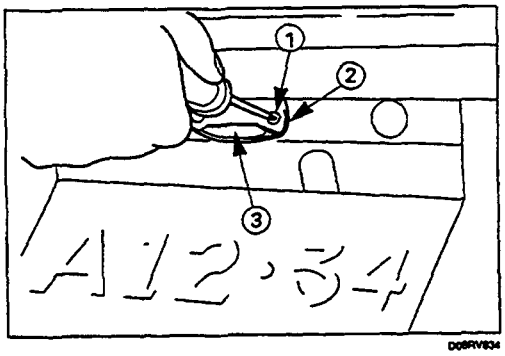

LICENSE PLATE LIGHT

Removal

1. Loosen the screws ①.
2. Remove the lens cover ② and the lens ③.
3. Pull the bulb to remove it.

Installation

Follow the removal procedure in the reverse order to install the license plate light.

Pay close attention to the important points mentioned in the following paragraphs.

Bulb

Be absolutely sure that the license plate light bulb is correctly installed.

This will prevent a poor contact and an open circuit.

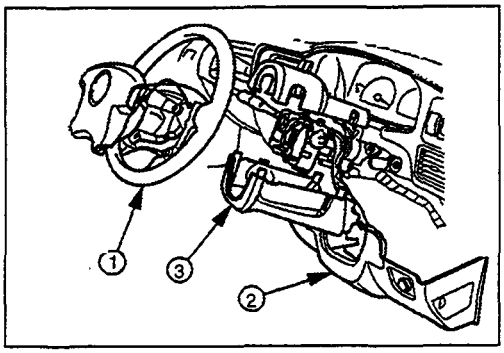

HEADLIGHT BEAM SWITCH

Removal

1. Remove the steering wheel 1.
   Refer to the "steering" Section of this manual.
2. Remove the instrument panel lower cover 2.
3. Remove the steering column cover 3.

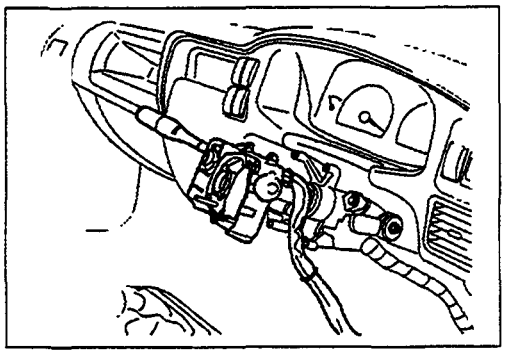

4. Disconnect the connector.
5. Remove the headlight beam switch (lever) from the steering shaft.

Installation

Follow the removal procedure in the reverse order to install the headlight beam switch (lever).
Pay close attention to the important pints mentioned in the following paragraphs.

Connector

Be absolutely sure that the headlight beam switch connector is securely connected.
This will prevent a poor contact and an open circuit.

Wire Harness

Do not pinch the wire harnesses between the cluster and the metre hood during the cluster
installation procedure.
Wire damage will result.

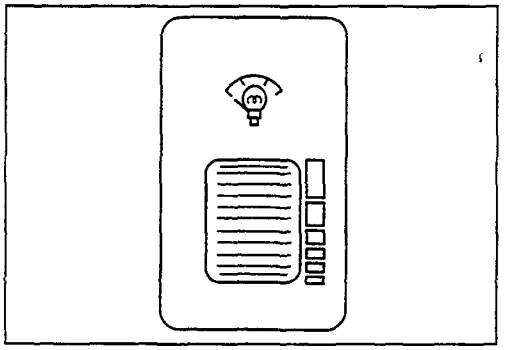

ILLUMINATION CONTROLLER

Turning the illumination controller knob upward increases the brightness of each illumination
light, turning it downward decreases its brightness.

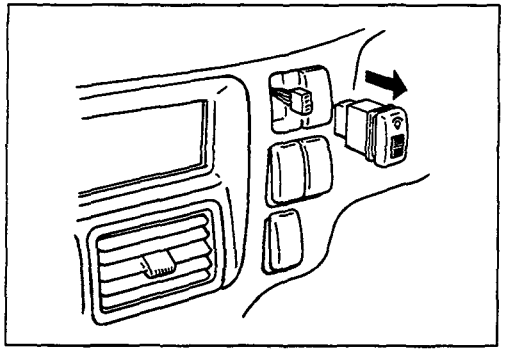

Removal

1. Instrument Panel Cluster Assembly
   Refer to Section 10 "BODY" for instrument panel cluster assembly removal steps.
2. Illumination Controller
   - Disconnect the switch connector.
   - To remove the switch, push the lock from the back side of the cluster assembly.

Installation

To install, follow the removal procedure in the reverse order.

Connector

Be absolutely sure that the illumination controller connector is securely connected.
This will prevent a poor contact and an open circuit.

AIMING OF HEADLIGHT

Check and adjust the inflation pressures, clean the headlight lenses, park the vehicle on a level surface and insure that vehicle is at curb weight.

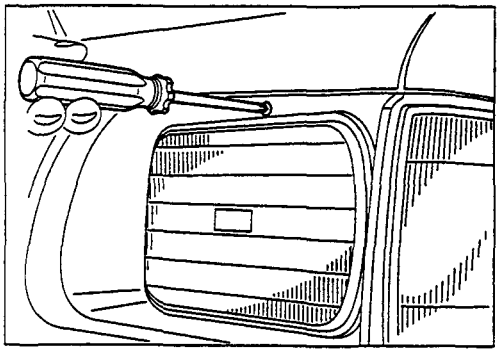

VERTICAL ADJUSTMENT

Use a screwdriver for vertical adjustment.

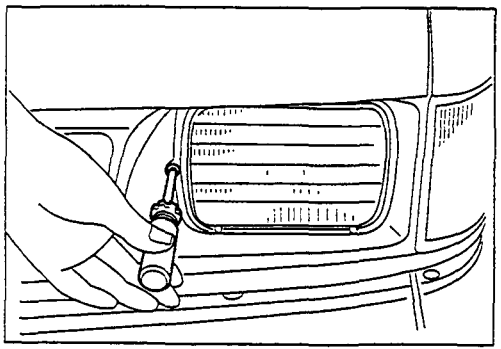

HORIZONTAL ADJUSTMENT

Use a screwdriver horizontal adjustment.

INSPECTION AND REPAIR

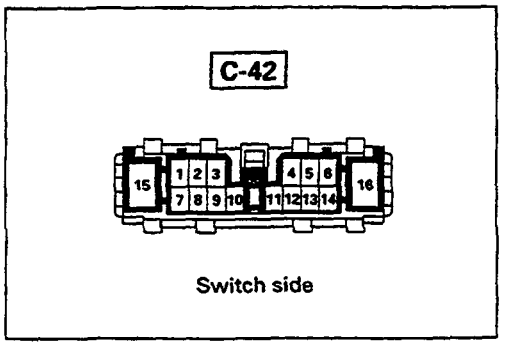

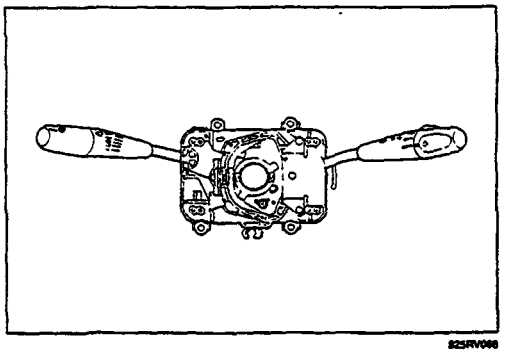

825RV066

LIGHTING SWITCH

Lighting Switch Connections

SW position \ Terminal No.	1	7	8
OFF			
Tail		○—○	
↕		○—○	
Headlight	○—○	○—○	○—○

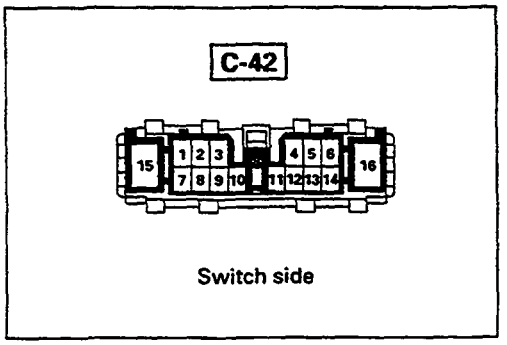

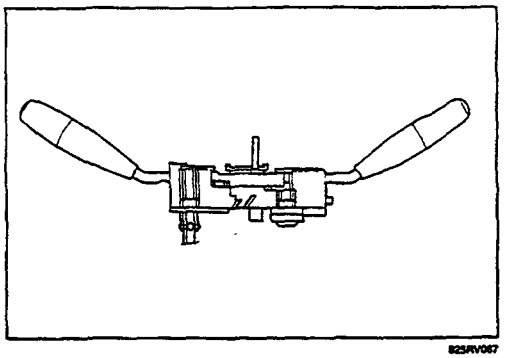

825RV067

HEADLIGHT BEAM SWITCH

Headlight Beam and Passing Switch Connections

SW position \ Terminal No.		16	13	15	14
At "Dimmer" position	HI	○—○			
	LO	○—○			
At "Passing" position		○—○		○—○	

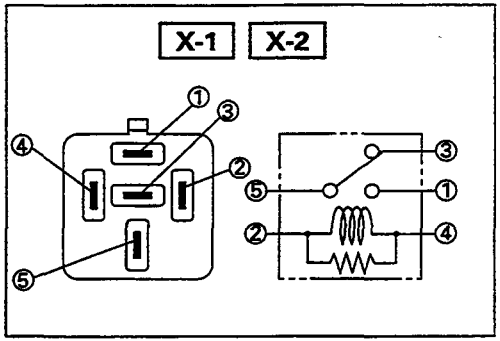

080RV005

LIGHTING RELAY, TAIL RELAY

Check continuity between the relay terminals.

① – ⑤	No continuity

(When battery voltage is applied between ② and ④)

① – ⑤	Continuity

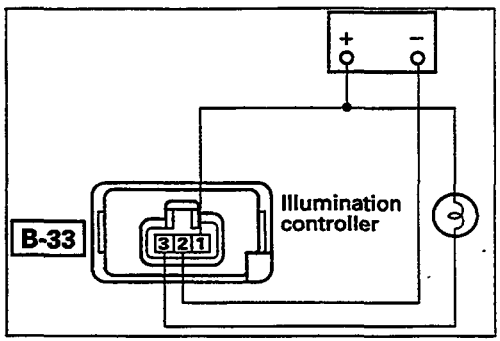

825RV107

ILLUMINATION CONTROLLER

Controller Inspection

Check the illumination controller function.

HAZARD WARNING FLASHER, TURN SIGNAL LIGHT, BACK UP LIGHT, HORN & STOP LIGHT

PART LOCATION

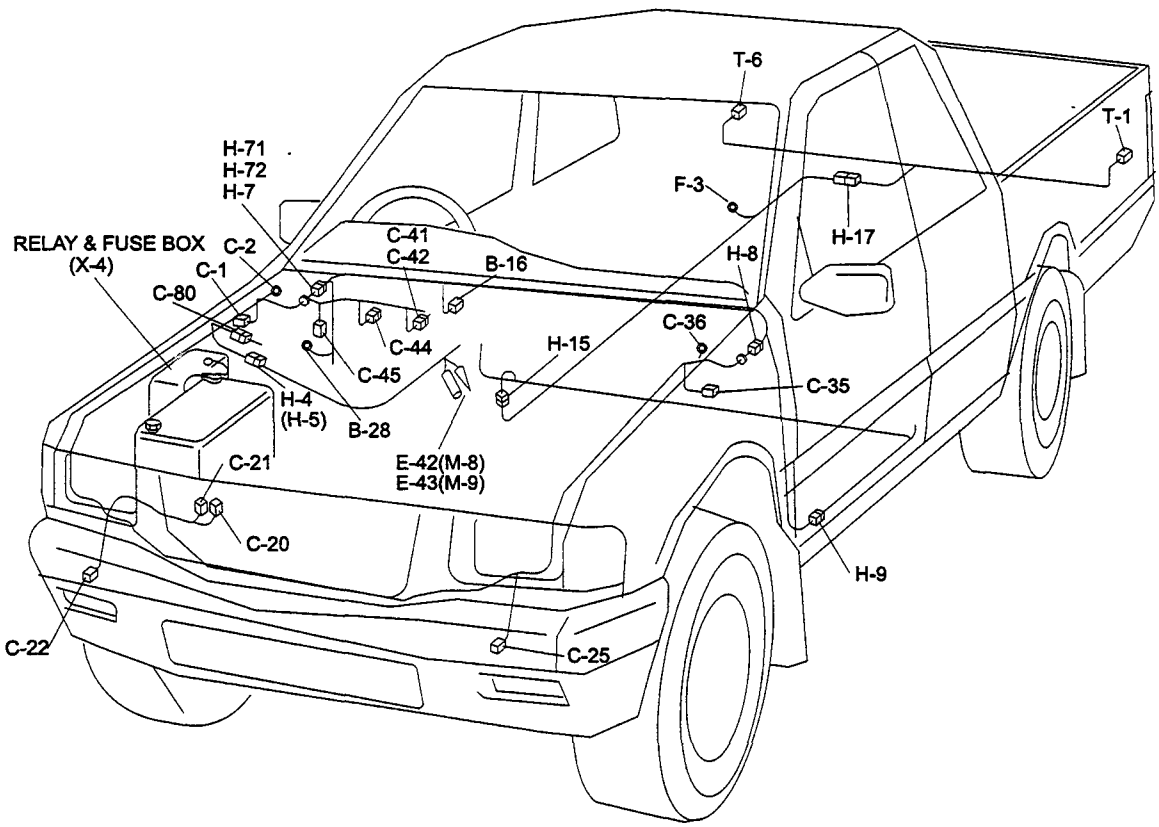

CIRCUIT DIAGRAM

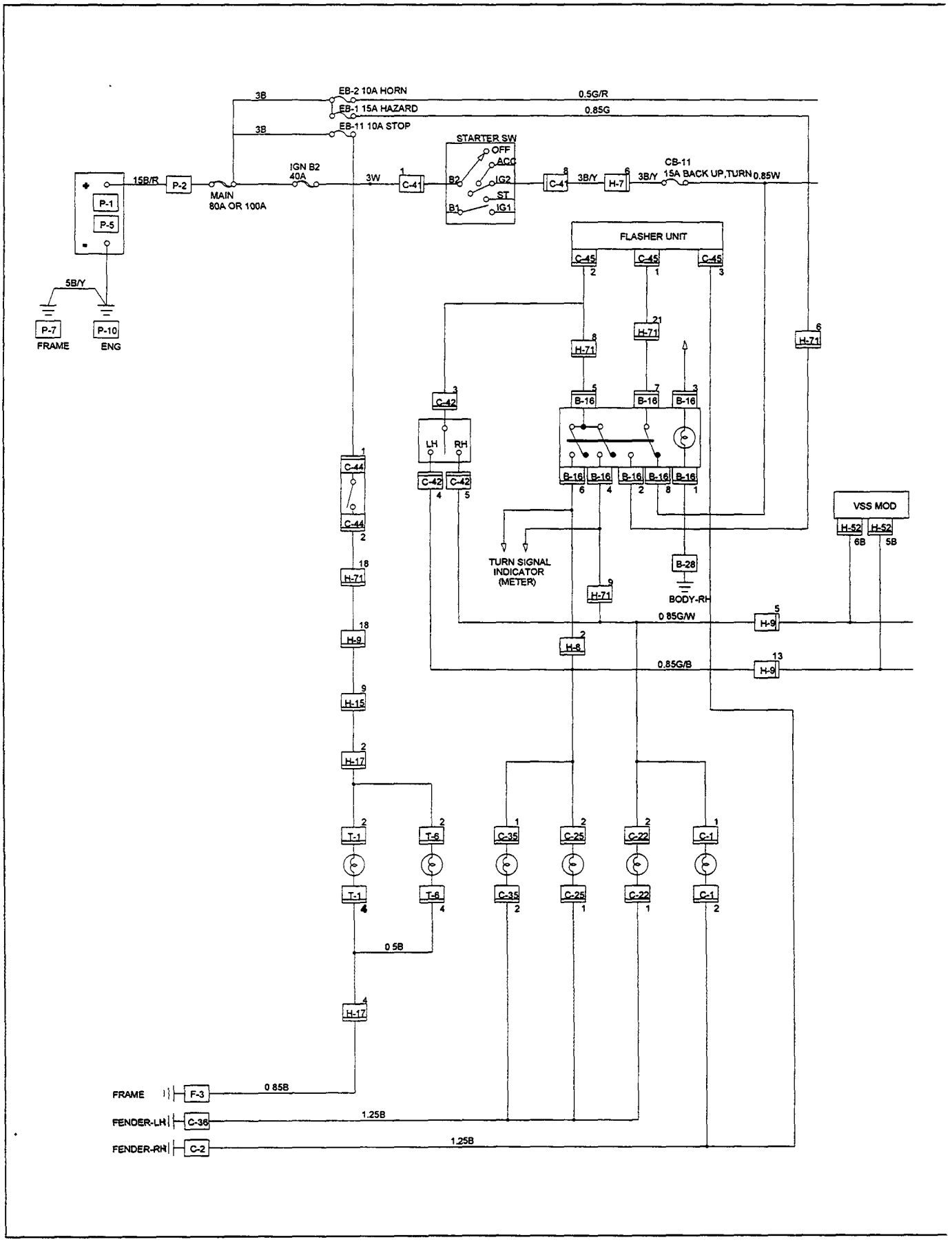

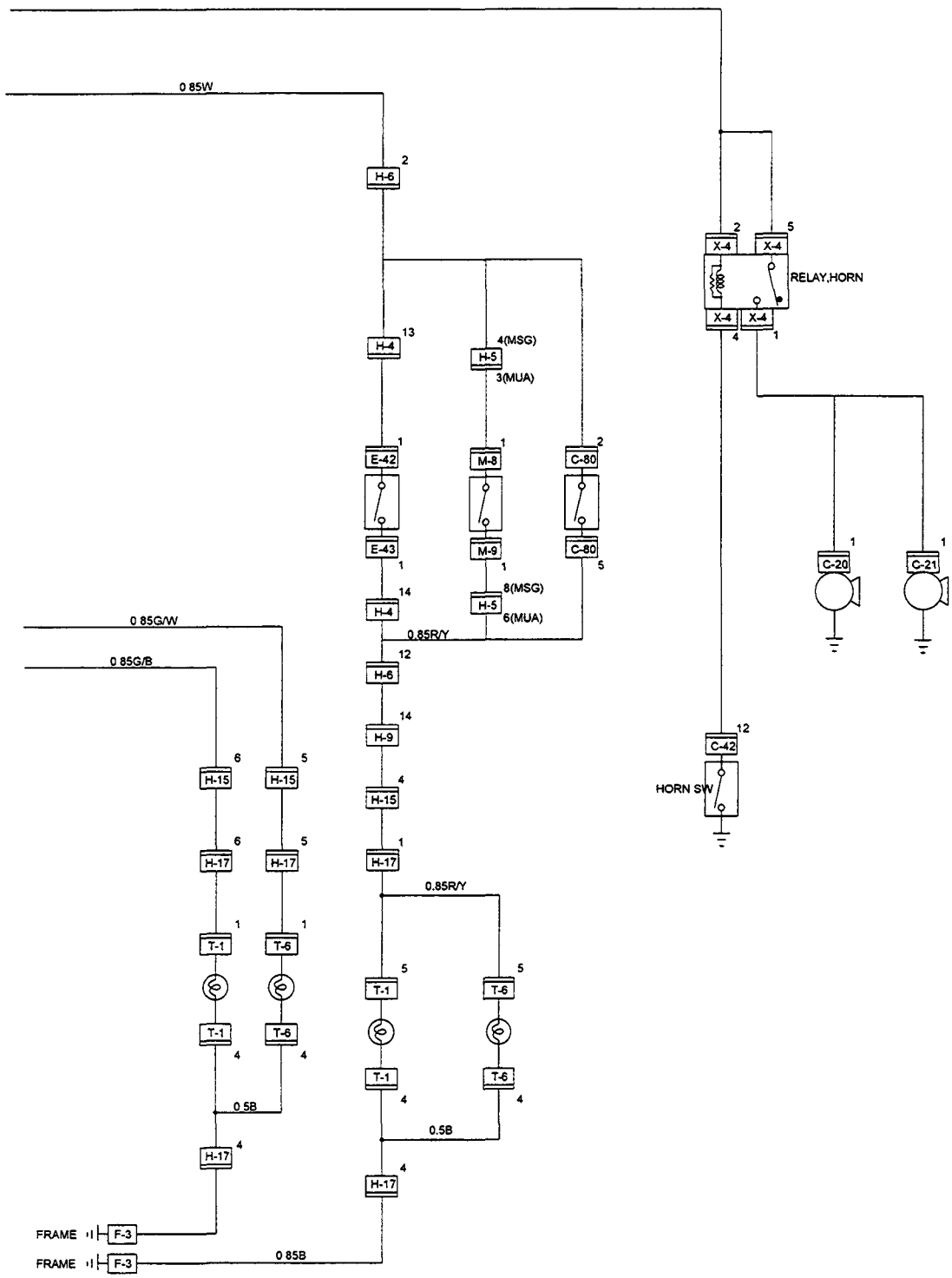
0 85W
H-6
2
H-4
13
4(MSG)
H-5
3(MUA)
E-42
1
M-8
1
C-80
2
E-43
1
M-9
1
C-80
5
H-4
14
8(MSG)
H-5
6(MUA)
0.85R/Y
0 85G/W
0 85G/B
H-6
12
H-9
14
H-15
6
H-15
5
H-15
4
H-17
6
H-17
5
H-17
1
0.85R/Y
T-1
1
T-6
1
T-1
5
T-6
5
T-1
4
T-6
4
T-1
4
T-6
4
0 5B
0.5B
H-17
4
H-17
4
FRAME
F-3
FRAME
F-3
0 85B
X-4
2
X-4
5
RELAY,HORN
X-4
4
X-4
1
C-20
1
C-21
1
C-42
12
HORN SW

TROUBLE SHOOTING

STOPLIGHT AND HIGH MOUNTED STOPLIGHT

1. One side of stoplight does not light

Checkpoint		Trouble Cause	Countermeasure
Stoplight bulb continuity	NG	Burned out bulb or poor connector contact	Replace the bulb or repair connector contact
OK			
RHD: Continuity between 18 [H-6] - 2 [T-1] (LH) (or 2 [T-6] (RH))	NG	Open circuit or poor connector contact	Repair open circuit or connector contact
OK			
Continuity between [F-3] - 4 [T-1] (LH) (or 4 [T-6] (RH))	NG	Open circuit or poor connector contact	Repair open circuit or connector contact

2. Both sides of stoplight do not light

Fuse No. EB-11 (10A, Fuse and Relay box)	NG	Poor fuse contact or blown	Reinstall or replace fuse No. EB-11 (10A)
OK			
Stop light switch (or brake switch) function	NG	Incorrect the switch installation or adjustment	Adjust the switch installation position
OK			
Voltage between 2 [T-1] - ground or 2 [T-6] - ground with brake pedal depressed (Should be battery voltage present)	NG	Open circuit or poor connector contact between stoplight switch (or brake switch) and stoplight	Repair open circuit or connector contact

TURN SIGNAL LIGHT AND HAZARD WARNING LIGHT

1. Turn signal light does not light on both sides (RH and LH)

Checkpoint		Trouble Cause	Countermeasure
Fuse No. CB-11 (15A, Fuse box)	NG	Poor fuse contact or blown fuse	Reinstall or replace fuse No. CB-11 (15A)
OK			
Short circuit between connector 1 C-45 - 2 C-45 when turn signal switch operates with starter switch in "ON" position (Turn signal light should be ON)	NG	Flasher unit malfunction	Replace the flasher unit
OK			
Continuity between connector 3 C-45 -ground (Should be continuity)	NG	Open circuit or poor connector contact	Repair open circuit or connector contact
OK			
Turn signal switch continuity between connector 3 C-42 - 4 C-42 and 3 C-42 - 5 C-42 when turn signal switch operates	NG	Poor switch point contact or faulty switch	Repair or replace the combination switch

2. Turn signal light does not light on one side (RH or LH)

Turn signal switch continuity	NG	Poor switch point contact or faulty switch	Repair or replace the combination switch
OK			
(RH) Continuity between 2 C-22 - 5 C-42 (FRT), 1 C-1 - 5 C-42 (SIDE) 1 T-6 - 5 C-42 (RR)	NG	Open circuit or poor connector contact	Repair open circuit or connector contact
OK			
(LH) Continuity between 2 C-25 - 4 C-42 (FRT), 1 C-35 - 4 C-42 (SIDE) 1 T-1 - 4 C-42 (RR)	NG	Open circuit or poor connector contact	Repair open circuit or connector contact

3. Hazard warning light does not light

Checkpoint		Trouble Cause	Countermeasure
Fuse No. EB-1 (15A, Relay and fuse box)	NG	Poor fuse contact or blown fuse	Reinstall or replace the fuse No. EB-1 (15A)
OK			
Hazard SW. continuity	NG	Hazard SW. malfunction	Repair or replace the hazard SW.
OK			
Voltage between 2 B-16 - ground (Should be battery voltage present)	NG	Open circuit or poor connector contact between fuse No. EB-1 (15A) – 2 B-16	Repair open circuit or connector contact

4. Flashing rate too fast (One side)

Inspect bulb	NG	Burned out bulb	Replace the bulb or repair open circuit

BACKUP LIGHT

1. Backup light does not light on one side (RH or LH)

Checkpoint		Trouble Cause	Countermeasure
Backup light bulb continuity	NG	Burned out bulb or poor connector contact	Replace the bulb or repair connector contact
OK			
Grounding point	NG	Poor ground contact	Repair grounding point contact

2. Backup light does not light on both sides

Fuse No. CB-11 (15A, Fuse box)	NG	Poor fuse contact or blown fuse	Reinstall or replace fuse No. CB-11 (15A)
OK			
Back up light switch (mode switch) continuity	NG	Poor switch point contact or faulty switch	Repair or replace the switch
OK			
Voltage between 5 [T-1] (5 [T-6]) - ground with starter switch ON and shift lever into reverse position (Should be battery voltage present)	NG	Open circuit or poor connector contact	Repair open circuit or connector contact

HORN

1. Both sides of horn do not sound

Checkpoint		Trouble Cause	Countermeasure
Fuse No EB-2 (10A, Relay and fuse box)	NG	Poor fuse contact or blown fuse	Reinstall or replace fuse No. EB-2 (10A)
OK			
Grounding point	NG	Poor ground contact	Repair the grounding point
OK			
Horn relay	NG	Poor relay contact or faulty horn relay	Reinstall or replace the horn relay
OK			
Voltage between connector 2 [X-4] - ground or 5 [X-4] - ground (Should be battery voltage present)	NG	Open circuit or poor connector contact between fuse No. EB-2 (10A) and horn relay	Repair open circuit or reconnect the connector
OK			
Remove steering pad and steering wheel			
Horn switch continuity	NG	Poor switch point contact or faulty switch	Repair or replace the horn switch
OK			
Continuity between 4 [X-4] - 12 [C-42] 1 [X-4] - 1 [C-20] (1 [C-21])	NG	Open circuit or poor connector contact	Repair open circuit or connector contact

2. One side of horn does not blow

Checkpoint		Trouble Cause		Countermeasure
Horn continuity between connectors	NG	Faulty horn assembly	—	Replace the horn assembly
OK				
Voltage between 1 C-20 (1 C-21)- ground with horn switch depressed (Should be battery voltage present)	NG	Open circuit or poor connector contact	—	Repair open circuit or reconnect the connector

3. Insufficient horn volume

Battery condition	NG	Discharged battery	—	Recharge or replace the battery
OK				
Horn	NG	Stain or foreign material in the horn	—	Clean and/or remove the foreign material

REMOVAL AND INSTALLATION

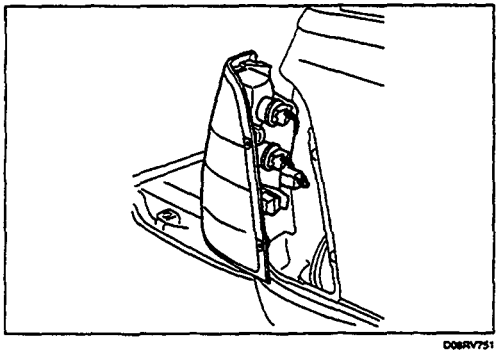

D08RV751

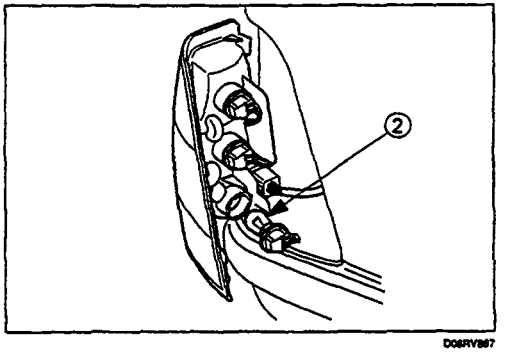

D08RV807

REAR COMBINATION LIGHT

Stoplight

Removal

1. Open the rear gate.
2. Remove the screws of rear combination light.
3. Remove the rear combination light assembly.
4. Turn the bulb ② counterclockwise to remove it.

Installation

Follow the removal procedure in the reverse order to install the rear combination light.

Pay close attention to the important points mentioned in the following paragraphs.

Bulb

Be absolutely sure that each bulb is correctly installed.

This will prevent a poor contact and an open circuit.

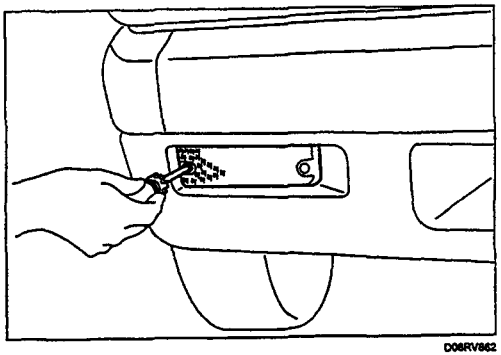

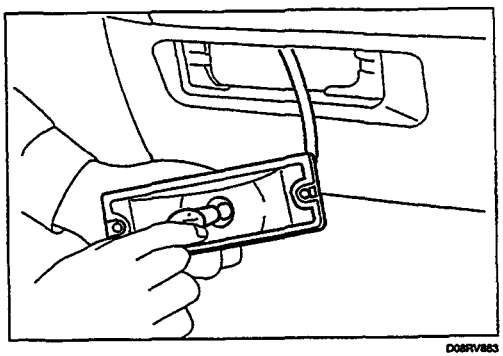

FRONT TURN LIGHT

Removal

1. Remove the front turn light lens.
2. Pull the light housing free.
3. Push the bulb in and turn it counterclockwise to remove it from the light housing.

Installation

Follow the removal procedure in the reverse order to install the front turn light.

Pay close attention to the important points mentioned in the following paragraphs.

Bulb

Be absolutely sure that the front turn light bulb is correctly installed.

This will prevent a poor contact and an open circuit.

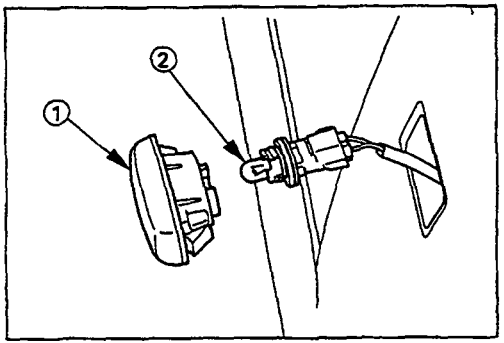

D08RV750

SIDE TURN LIGHT

Removal

1. Remove the lens ①.
   - Pull the light/bulb toward you while pushing the light housing in the rear direction of the vehicle to release its lock.
   - Remove the socket by turning it counterclockwise.
2. Pull the bulb ② to remove it.

Installation

Follow the removal procedure in the reverse order to install the side turn light.

Pay close attention to the important points mentioned in the following paragraphs.

Bulb

Be absolutely sure that the side turn light bulb is correctly installed.

This will prevent a poor contact and an open circuit.

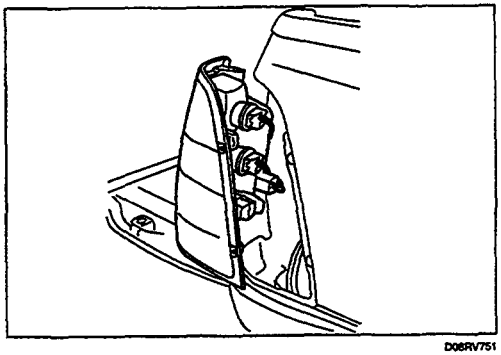

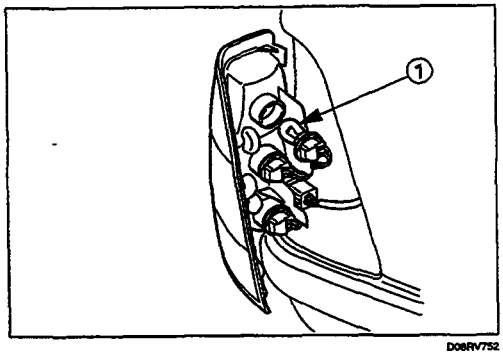

REAR COMBINATION LIGHT

Turn Signal Light

Removal

1. Open the rear gate.
2. Remove the screws.
3. Remove the rear combination light assembly.
4. Turn the bulb ① counterclockwise to remove it.

Installation

Follow the removal procedure in the reverse order to install the rear combination light.

Pay close attention to the important points mentioned in the following paragraphs.

Bulb

Be absolutely sure that the rear combination light bulb is correctly installed.

This will prevent a poor contact and an open circuit.

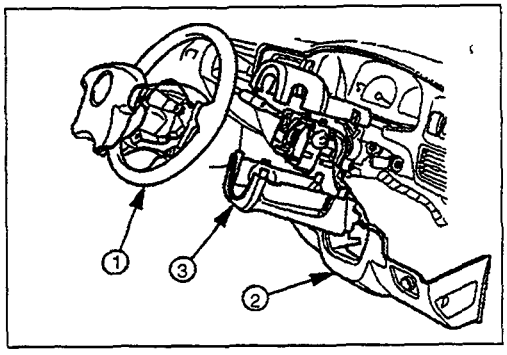

TURN SIGNAL SWITCH

Removal

1. Remote steering wheel 1.
   Refer to the "steering" Section of this Manual.
2. Remove the instruments panel lower cover 2.
3. Remove the steering column cover 3.

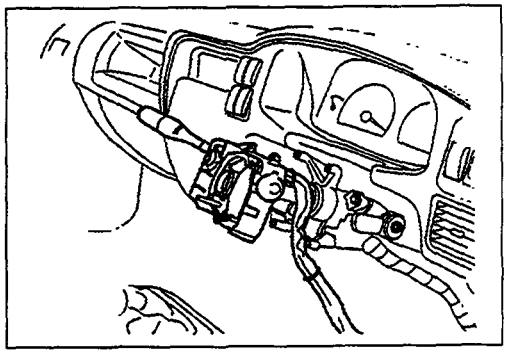

4. Disconnect the connector.
5. Remove the turn signal switch from the steering shaft.

Installation

Follow the REMOVAL procedure in the reverse order to install the turn signal switch (lever).
Pay close attention to the important points mentioned in the following paragraphs.

Connector

Be absolutely sure that the turn signal switch connector is securely connected.
This will prevent a poor contact and at an open circuit.

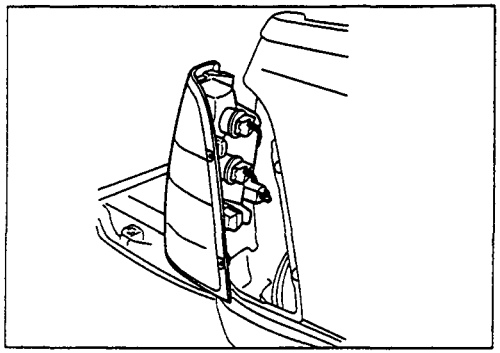

D08RV751

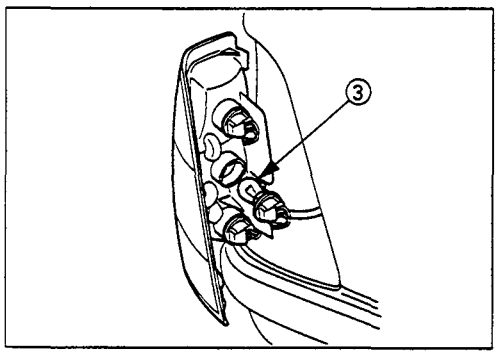

D08RV886

REAR COMBINATION LIGHT

Back Up Light

Removal

1. Open the rear gate.
2. Remove the screws.
3. Remove the rear combination light assembly.
4. Turn the bulb ③ counterclockwise to remove it.

Installation

Follow the removal procedure in the reverse order to install the rear combination light.

Pay close attention to the important points mentioned in the following paragraphs.

Bulbs

Be absolutely sure that each bulb is correctly installed.

This will prevent a poor contact and an open circuit.

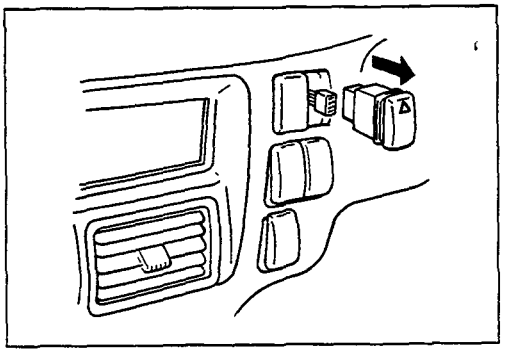

HAZARD WARNING FLASHER SWITCH

Removal

1. **Instrument Panel Cluster Assembly**
   - Refer to Section 10 "body" for instrument panel cluster assembly REMOVAL steps.
2. **Hazard Warning switch**
   - Disconnect the switch connector.
   - To remove the switch, push the lock from the back side of the cluster assembly.

Installation

To install, follow the REMOVAL procedure in the reverse order.

Connector

Be absolutely sure that the hazard warning flasher switch connector is securely connected.
This will prevent a poor contact and an open circuit

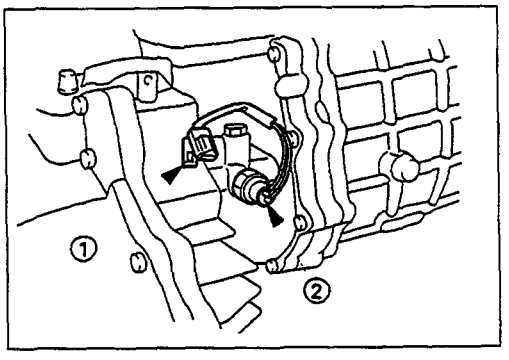

BACK UP LIGHT SWITCH

Removal

1. Disconnect the connector 1.
2. Remove the back up light switch from the transmission.

Installation

Follow the REMOVAL procedure in the reverse order to install the back up light switch.
Pay close attention to the important points mentioned in the following paragraphs.

Back up Light Switch Threads

Apply liquid gasket to the threaded portion and install the back up light switch.

Connector

Be absolutely sure that the back up light connector is securely connected.

This will prevent a poor contact and an open circuit.

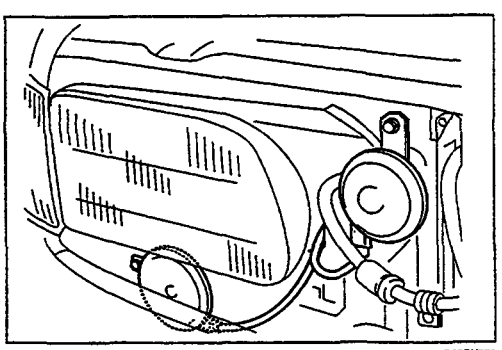

HORN

Removal

1. Remove the radiator grille.
   Refer to the "HEADLIGHT" removal procedure.
2. Loosen the horn bolt.
3. Disconnect the horn connector.

Installation

Follow the removal procedure in the reverse order to install the horn.

Pay close attention to the important points mentioned in the following paragraphs.

Connector

Be absolutely sure that the horn connector is securely connected.

This will prevent a poor contact and an open circuit.

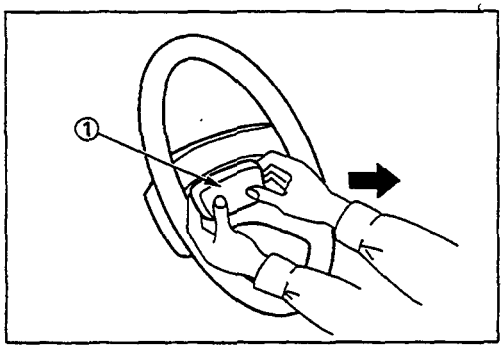

D08RV970

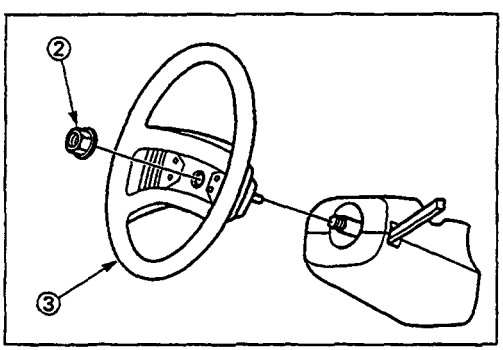

D08RV971

HORN SWITCH

Removal

1. Remove the horn pad ①.
2. Remove the steering wheel nut ②.
3. Remove the steering wheel ③.
4. Remove the horn switch.

Installation

Follow the removal procedure in the reverse order to install the horn switch.

Pay close attention to the important points mentioned in the following paragraphs.

Steering Wheel Nut (②)

Tighten the nut to the specified torque.

Steering Wheel Nut Torque	kg·m (lb·ft/N·m)
3.5 ± 0.5 (25.3 ± 3.6/34.3 ± 4.9)	

INSPECTION AND REPAIR

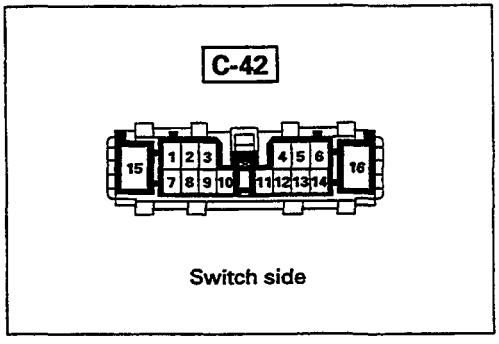

TURN SIGNAL SWITCH

Lighting Switch Connections

SW position \ Terminal No.		3	4	5
Turning direction	Left	○	○	
	↕	×		×
	Neutral			
	↕	×	×	
	Right	○		○

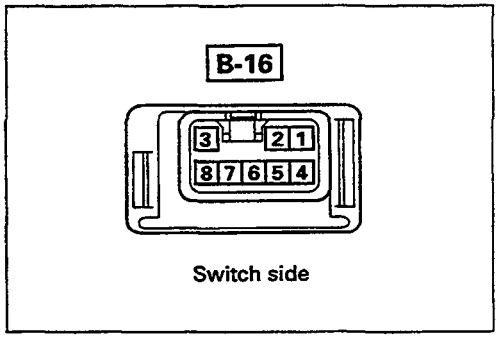

HAZARD WARNING FLASHER SWITCH

Hazard Warning Flasher Switch Connections

SW position \ Terminal No.	4	5	6	7	8	2	1	3
ON	○	○	○	○		○		
OFF				○	○			

DOME LIGHT, SPOT LIGHT, WARNING BUZZER

PART LOCATION

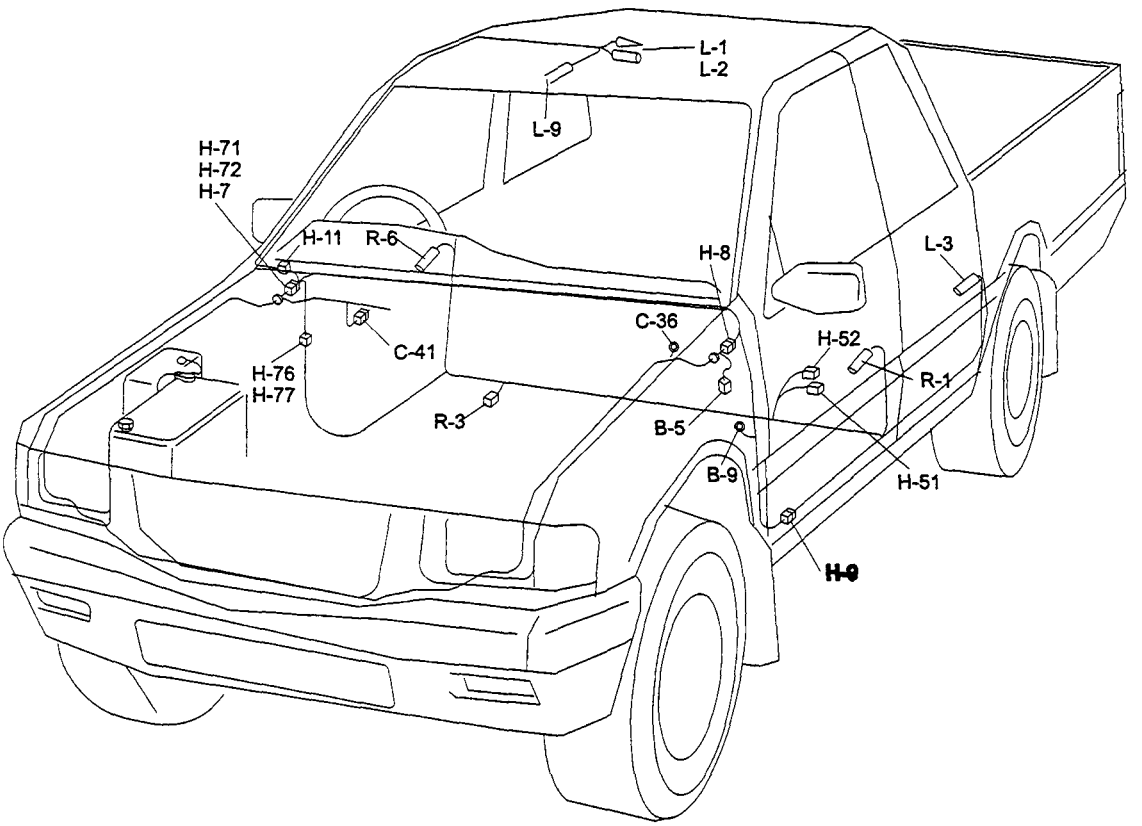

CIRCUIT DIAGRAM

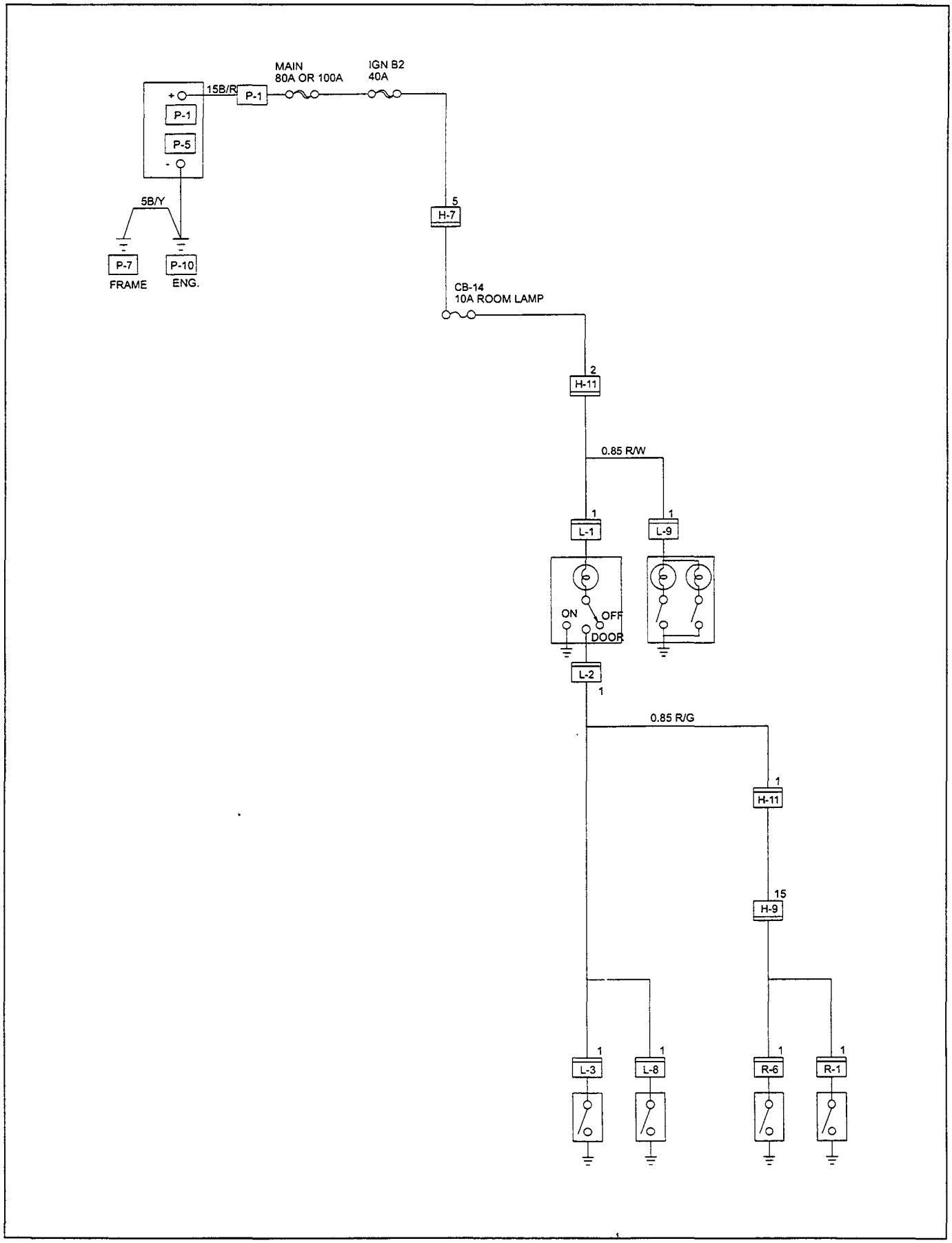

CIRCUIT DIAGRAM

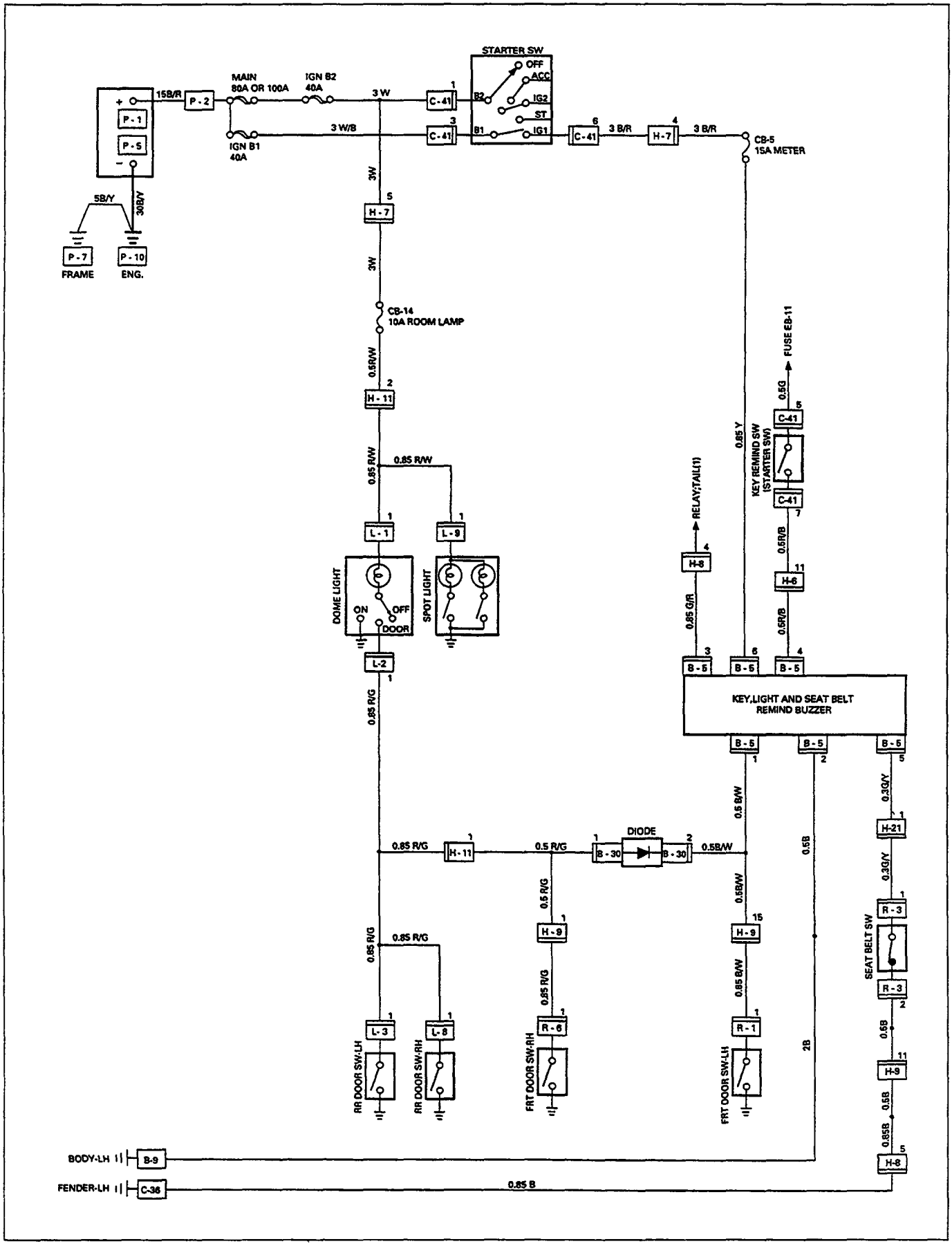

TROUBLE SHOOTING

1. Dome light does not light

Checkpoint		Trouble Cause		Countermeasure
Dome light bulb continuity	NG	Burned out the bulb	—	Replace the dome light bulb
OK				
Dome light switch function	NG	Switch malfunction	—	Repair or replace the dome light assembly
OK				
Continuity between connector 2 [H-11] - 1 [L-1]	NG	Open circuit or poor connector contact	—	Repair open circuit or connector contact

2. Dome light does not go out

Door switch function (Both side)	NG	Switch malfunction or foreign material in switch	—	Repair or replace the door switch
OK				
Continuity between connector 1 [L-2] -ground when shutting the door (Should be no continuity)	NG	Short circuit	—	Repair short circuit or connector contact

REMOVAL AND INSTALLATION

DOME LIGHT

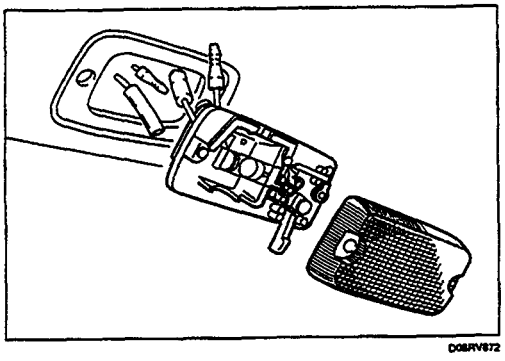

Removal

1. Remove the dome light cover free.

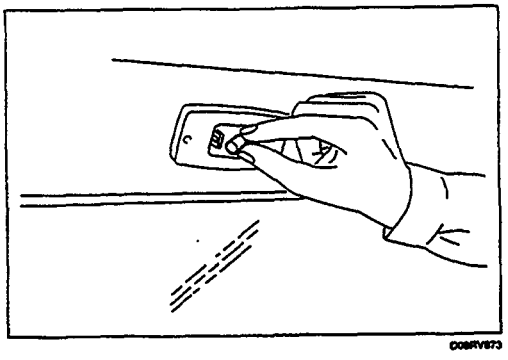

2. Pull the bulb to remove it.

Installation

Follow the removal procedure in the reverse order to install the dome light.

Pay close attention to the important points mentioned in the following paragraphs.

Bulb

Be absolutely sure that the dome light bulb is correctly installed.

This will prevent a poor contact and an open circuit.

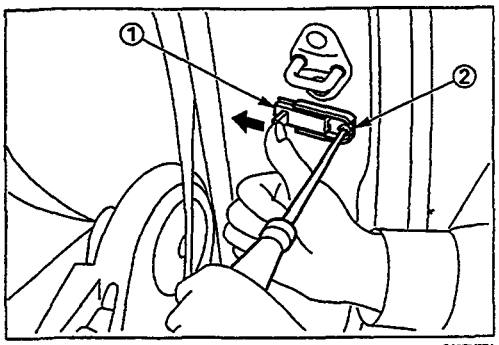

D08RV874

DOOR SWITCH

Removal

1. Push the door switch sliding portion ① in the direction of the arrow in the illustration.
2. Loosen the screw ②.
3. Pull the switch free to remove it.
4. Disconnect the door switch connector.

Installation

Follow the removal procedure in the reverse order to install the spot light.

Pay close attention to the important points mentioned in the following paragraphs.

Connector

Be absolutely sure that the door switch connector is securely connected.
This will prevent a poor contact and an open circuit.

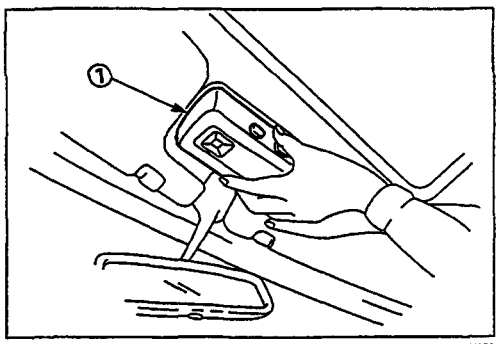

D08RV875

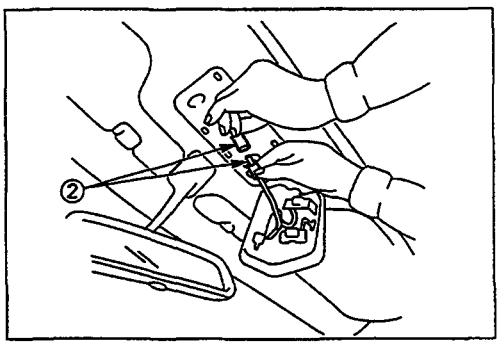

D08RV876

SPOT LIGHT

Removal

1. Grasp the spot light housing ① with both hands.
   Pull the housing straight down.
   This will release the clip.
2. Disconnect the connector ②.
3. Push the bulb in and turn it counterclockwise to remove it.

Installation
Follow the REMOVAL procedure in the reverse order to install the spot light.
Pay close attention to the important points mentioned in the following paragraphs.

Connector
Be absolutely sure that the spot light connector is securely connected.
This will prevent a poor contact and an open circuit.

Bulb
Be absolutely sure that the spot light bulb is correctly installed.
This will prevent a poor contact and an open circuit.

WARNING BUZZER

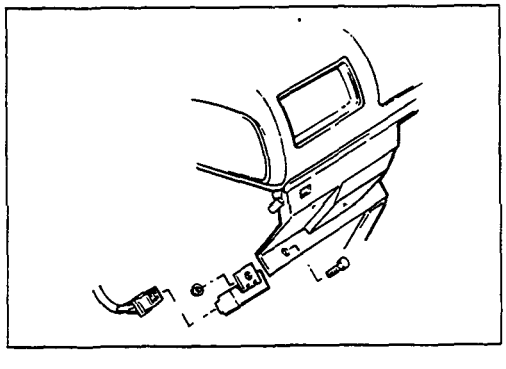

Left hand dash panel
1 Warning buzzer

Removal

1. Dash Side Panel
2. Warning Buzzer
   - Disconnect the connector.
   - Remove the screw

Installation
Follow the REMOVAL procedure in the reverse order to install the warning buzzer.
Pay close attention to the important points mentioned in the following paragraphs.

Connector
Be absolutely sure that the warning buzzer connector is securely connected.
This will prevent a poor contact and an open circuit.

INSPECTION AND REPAIR

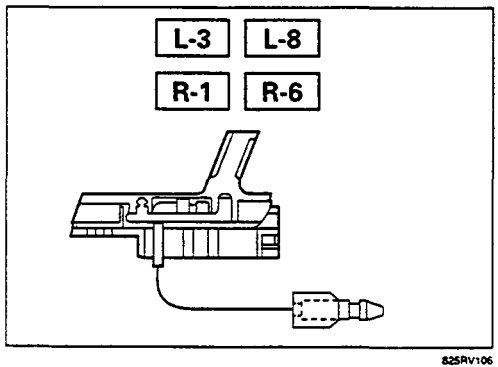

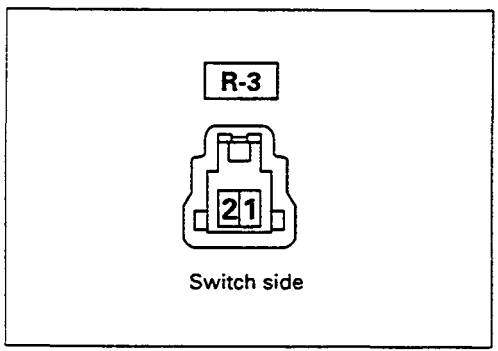

DOOR SWITCH

Door Switch Connections

SW position \ Connector No. / Terminal No.	L-3 R-1	L-8 R-6
	1	Body Ground
PUSHED		
RELEASED	○	○

SEAT BELT SWITCH (SAUDI ARABIA, SOUTH AFRICA)

Seat Belt Switch Connections

SW position \ Connector No. / Terminal No.	R-3	
	1	2
ON (Belt tongue removed)	○	○
OFF (Belt tongue inserted)		

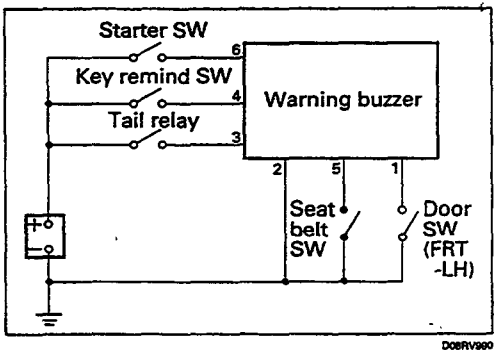

WARNING BUZZER (SOUTH AFRICA)

1. Warning Buzzer Circuit

Warning function	Operational conditions
Fasten the seat belt	The buzzer sounds when the starter switch is turned on with the seat belt switch on (when the seat belt is not used).
Key left in starter switch	The buzzer sounds when both the key remind switch and the FRT door switch-LH are turned on. To stop the sound of the buzzer, turn on the starter switch.
Taillights left on	The buzzer sounds when the starter switch is turned from the "on" to "off" position while the taillights are on.

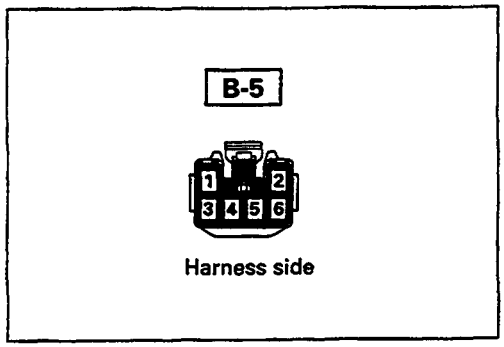

2. Warning Buzzer Harness Side Connector Circuit

Disconnect the warning buzzer connector and check continuity and voltage between the warning buzzer harness side connector terminals.

Terminal No.	Wire color	Connecting to	Check item	Connecting terminal	Check condition		Standard
5	G/Y	Seat belt SW	Continuity	5-Ground	Seat belt	Unfasten	Continuity
						Fasten	No continuity
3	G/R	Tail relay	Voltage	3-Ground	Lighting SW "ON"		Approx. 12V
4	R/B	Key remind SW (Starter SW)		4-Ground	Key	Insert	Approx. 12V
						Remove	0V
6	Y	Fuse CB-5		6-Ground	Starter SW "ON"		Approx. 12V
1	B/W	Door SW (FRT-LH)	Continuity	1-Ground	FRT door-LH	Open	Continuity
						Close	No continuity
2	B	Ground		2-Ground	—		Continuity

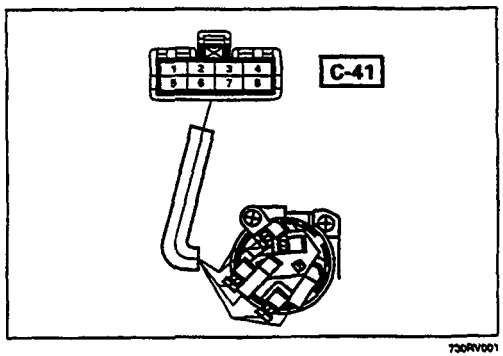

KEY REMIND SWITCH (STARTER SWITCH)

Switch Connections

Starter switch key position \ Terminal No.		Connector No. C-41	
		5	7
LOCK	Removed		
OFF	Inserted	○	○
ACC			
ON			
START			

WINDSHIELD WIPER AND WASHER

PART LOCATION

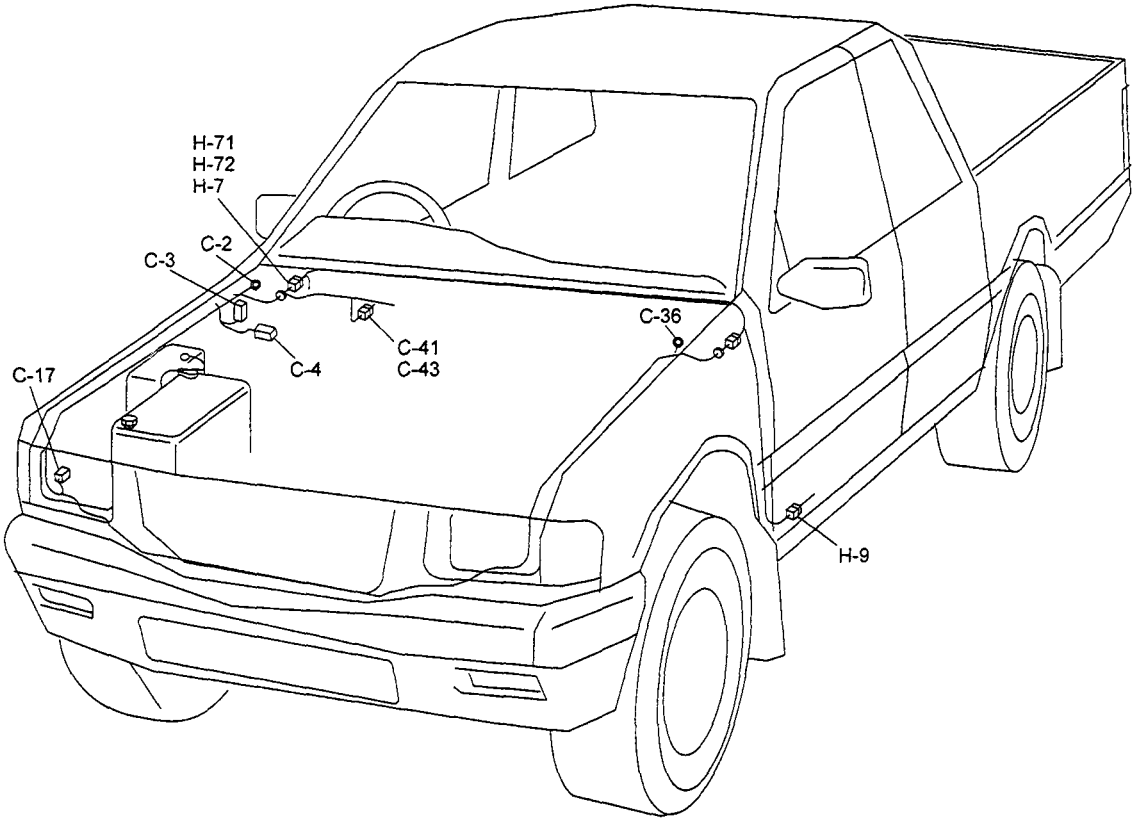

CIRCUIT DIAGRAM

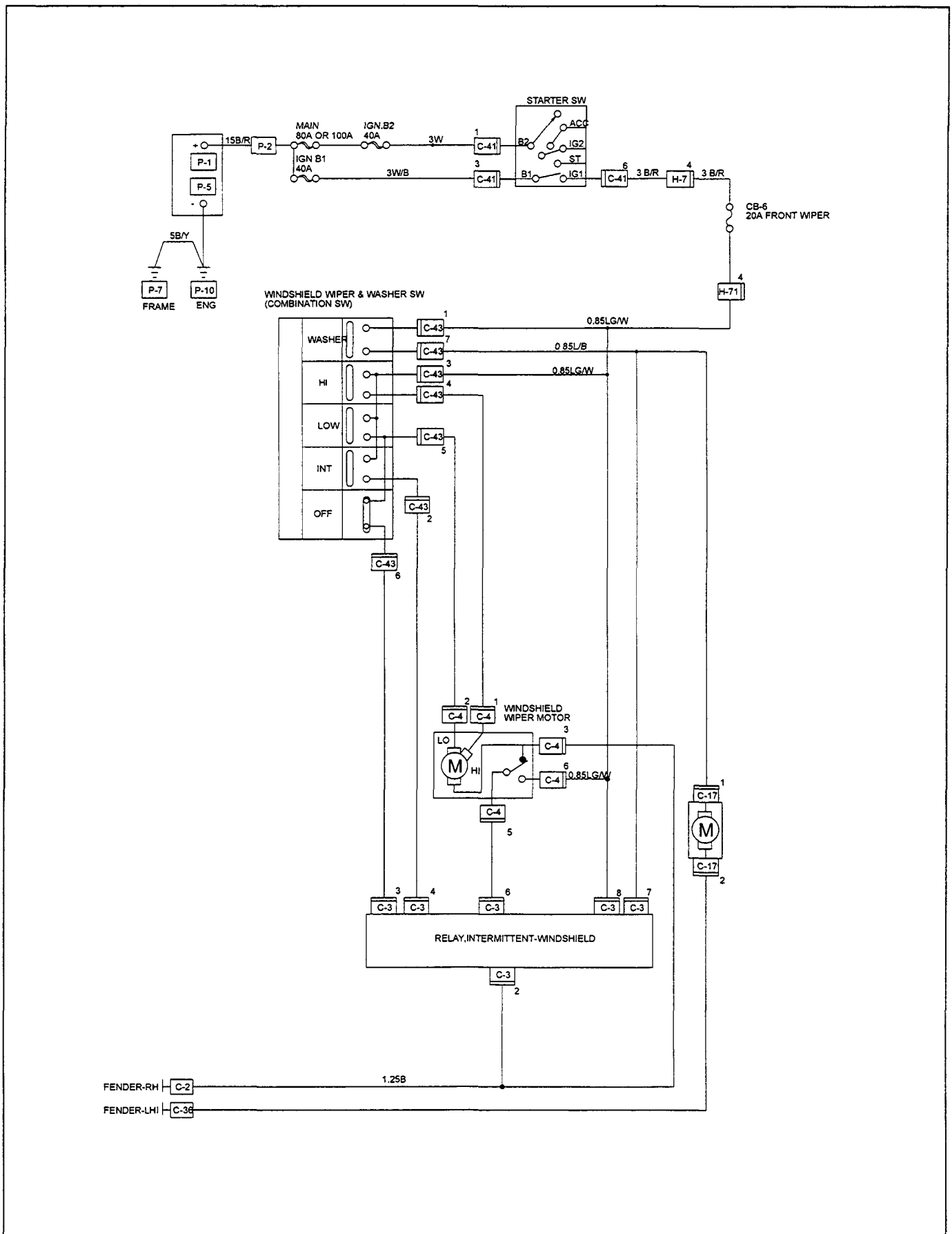

TROUBLE SHOOTING

WINDSHIELD WIPER

1. Wiper does not operate at any switch position

Checkpoint		Trouble Cause		Countermeasure
LHD: Fuse No. CB-8 (20A) RHD: Fuse No. CB-6 (20A)	NG	Poor fuse contact or blown		Reinstall or replace the fuse No. CB-8 (20A) (RHD: CB-6 (20A))
OK				
Voltage between 3 C-43 and the ground (Should be battery voltage present)	NG	Open circuit or poor connector contact		Repair open circuit or connector contact
OK				
Continuity in the wiper & washer SW.	NG	SW. malfunction		Replace the wiper & washer SW.
OK				
Grounding point (C-2)	NG	Poor grounding point contact		Repair grounding point (C-2) contact
OK				
1. Wiper motor function when connecting the motor connector 2 C-4 to the battery (+) terminal, and 3 C-4 to the (–) terminal (Should the wiper motor rotate at a low speed) 2. Wiper motor function when connecting the motor connector 1 C-4 to the battery (+) terminal, and 3 C-4 to the (–) terminal (Should the wiper motor rotate at a high speed)	NG	Wiper motor malfunction		Replace the wiper motor
OK				
Continuity between 3 C-4 and C-2	NG	Open circuit or poor connector contact		Repair open circuit or connector contact

2. Wiper does not operate at "INT" position

Checkpoint		Trouble Cause		Countermeasure
Continuity between the wiper & washer SW. connector terminals 3 [C-43] and 2 [C-43] at the "INT" position	NG	SW. malfunction	—	Replace the wiper & washer SW.
OK				
Grounding point [C-2]	NG	Poor grounding point contact	—	Repair grounding point contact
OK				
Voltage between the intermittent relay harness side connector terminal 4 [C-3] and the ground at the "INT" position (Should be battery voltage present)	NG	Open circuit or poor connector contact	—	Repair open circuit or connector contact
OK				
Intermittent relay function	NG	Relay malfunction	—	Replace the intermittent relay

3. Wiper does not operate at "LO" position

Wiper motor function 1.Disconnect the wiper & washer SW. connector 2.Turn the starter SW. on 3.Short-circuit between the wiper & washer SW. harness side connector terminals 3 [C-43] and 5 [C-43] 4.Check to see if the wiper motor rotates at a low speed	NG	Wiper motor malfunction	—	Replace the wiper motor
OK				
Wiper & washer SW. function	NG	SW. malfunction	—	Replace the wiper & washer SW.

4. Wiper does not operate at "HI" position

Checkpoint		Trouble Cause		Countermeasure
Continuity between the wiper & washer SW. connector terminals 3 [C-43] and 4 [C-43] at the "HI" position	NG	Open circuit or poor connector contact	—	Repair open circuit or connector contact
OK				
Wiper motor function when connecting the motor connector 1 [C-4] to the battery (+) terminal, and 3 [C-4] to the (–) terminal (Should the wiper motor rotate at a high speed)	NG	Wiper motor malfunction	—	Replace the wiper motor
OK				
Continuity between 4 [C-43] and 1 [C-4]	NG	Open circuit or poor connector contact	—	Repair open circuit or connector contact

5. Rotation of the wiper motor does not stop

Continuity in the wiper & washer SW.	NG	SW. malfunction	—	Replace the wiper & washer SW.
OK				
Wiper motor function	NG	Wiper motor malfunction	—	Replace the wiper motor

6. Auto-stop function of the wiper motor does not operate

Checkpoint		Trouble Cause	Countermeasure
Continuity between the wiper & washer SW. connector terminals 5 [C-43] and 6 [C-43] at the "OFF" position	NG	Open circuit or poor connector contact	Repair open circuit or connector contact
OK			
Wiper motor function 1. Disconnect the wiper motor connector 2. Connect the motor connector 2 [C-4] to the battery (+) terminal and 3 [C-4] to the (–) terminal, and then change the connection of the battery (+) terminal to the connector 6 [C-4] while the motor rotating at a low speed 3. Check to see if the wiper motor stops at the auto stop position when connecting the connector terminals 2 [C-4] and 5 [C-4] in this condition	NG	Wiper motor malfunction	Replace the wiper motor
OK			
Voltage between the wiper motor harness side connector terminal 6 [C-4] and the ground (Should be battery voltage present)	NG	Open circuit or poor connector contact	Repair an open circuit or a poor connection of the connectors between the fuse No. CB-8 (20A) (RHD: CB-6 (20A)) and 6 [C-4]
OK			
Continuity between the intermittent relay harness side connector 6 [C-3] and the wiper motor harness side connector 5 [C-4]	NG	Open circuit or poor connector contact	Repair open circuit or connector contact
OK			
Intermittent relay function	NG	Relay malfunction	Replace the intermittent relay

WASHER

1. Washer motor does not operate

Checkpoint		Trouble Cause		Countermeasure
LHD: Fuse No. CB-8 (20A) RHD: Fuse No. CB-6 (20A)	NG	Poor fuse contact or blown	—	Reinstall or replace the fuse No. CB-8 (20A) (RHD: CB-6 (20A))
OK				
Continuity between the wiper & washer SW. side connector terminals 1 C-43 and 7 C-43 when the washer button is depressed	NG	SW. malfunction	—	Replace the wiper & washer SW.
OK				
Voltage between the wiper & washer SW. harness side connector terminal 1 C-43 and the ground (Should be battery voltage present)	NG	Open circuit or poor connector contact	—	Repair or an open circuit or a poor connection of the connectors between the fuse No. CB-8 (20A) (RHD: CB-6 (20A)) and 1 C-43
OK				
Voltage between the washer motor harness side connector terminal 1 C-17 and the ground when the washer button is depressed (Should be battery voltage present)	NG	Open circuit or poor connector contact	—	Repair or an open circuit or a poor connection of the connectors between 1 C-17 and 7 C-43
OK				
Grounding point (C-36)	NG	Poor grounding point contact	—	Repair grounding point (C-36) contact
OK				
Washer motor function when connecting the motor side connector 1 C-17 to the battery (+) terminal, and the connector 2 C-17 to the (–) terminal (Should the washer motor rotate)	NG	Motor malfunction	—	Replace the washer motor
OK				
Continuity between 2 C-17 and C-36	NG	Open circuit or poor connector contact	—	Repair open circuit or connector contact

REMOVAL AND INSTALLATION

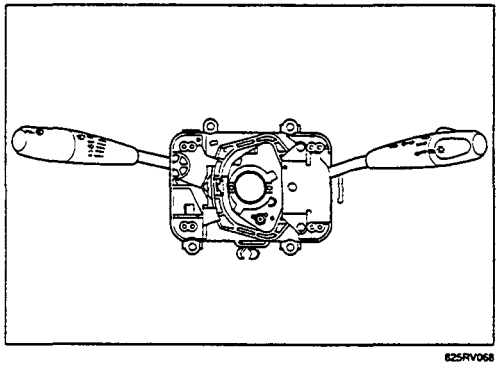

WIPER AND WASHER SWITCH

Removal

Refer to the removal steps of the LIGHTING SWITCH (COMBINATION SWITCH) in "LIGHTING" of this section.

Installation

Follow the removal procedure in the reverse order to install the wiper and washer switch.

Pay close attention to the important points mentioned in the following paragraphs.

Connector

Be absolutely sure that the wiper and washer switch connector is securely connected.

This will prevent a poor contact and an open circuit.

INSPECTION AND REPAIR

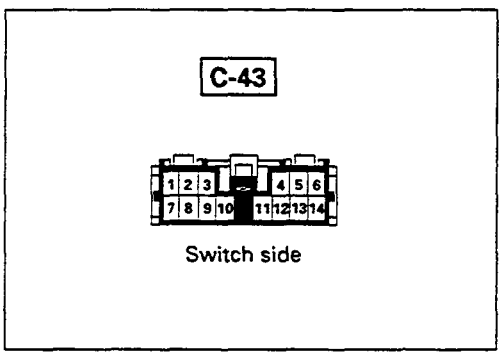

Control Switch Connections

SW position \ Terminal No.	6	3	5	4	2	1	7
Mist		○	○				
Off	○		○				
INT	○	○	○		○		
Lo		○	○				
Hi		○		○			
Wash						○	○

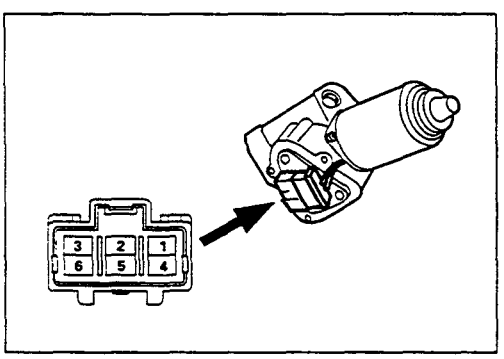

825RV084

Wiper Motor Inspection

Connector

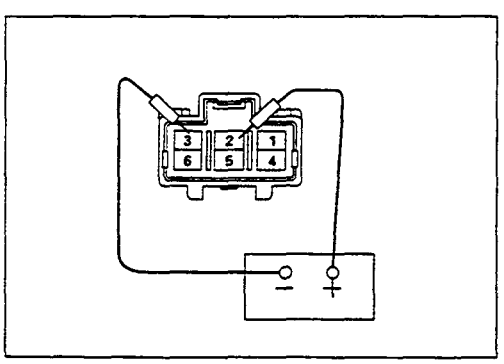

825RV081

Low Speed Inspection

1. Clamp the wiper motor in a vise.
   The moving parts must be clear of the vise.
2. Connect the connector terminals to the battery.
   Refer to the illustration.
3. Check the wiper motor low speed operation.

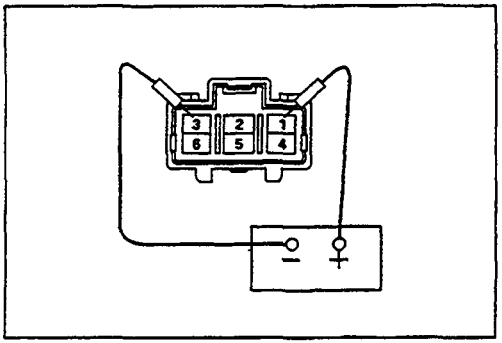

825RV082

High Speed Inspection

1. Clamp the wiper motor in a vise.
   The moving parts must be clear of the vise.
2. Connect the connector terminals to the battery.
   Refer to the illustration.
3. Check the wiper motor high speed operation.

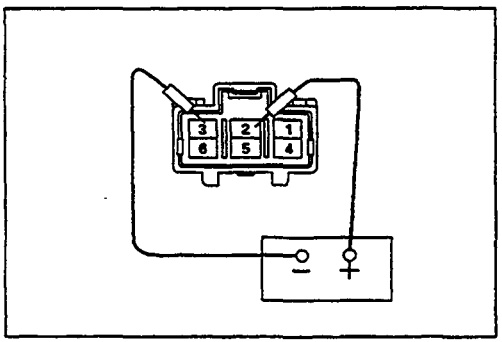

825RV081

Auto-Stop Inspection

1. Clamp the wiper motor in a vise.
   The moving parts must be clear of the vise.
2. Connect the connector terminals to the battery.
   Refer to the illustration.
3. Check the wiper motor low speed operation.
4. Disconnect the positive battery terminal.
   This will stop the motor.

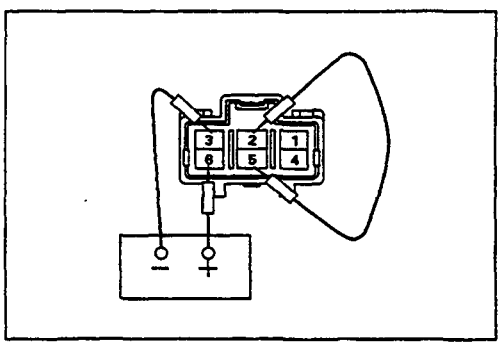

825RV080

5. Connect the connector terminals No. 2 and No. 5 with a lead wire.
   Refer to the illustration.
6. Reconnect the positive battery terminal to connector terminal No. 6.
   This will restart the motor.
   Refer to the illustration.
7. Check the auto-stop operation.

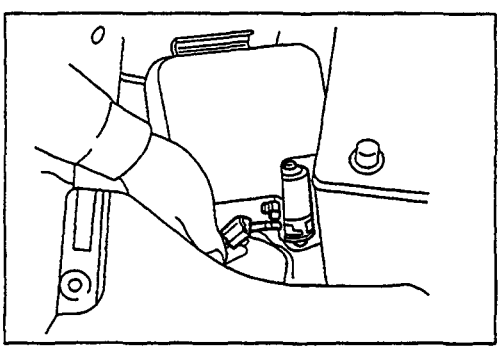

825RV079

Washer Motor Inspection

1. Fill the washer tank with washing solution.
2. Disconnect the motor connector.
3. Apply battery voltage to the washer motor connector.
4. Check the washer motor operation.

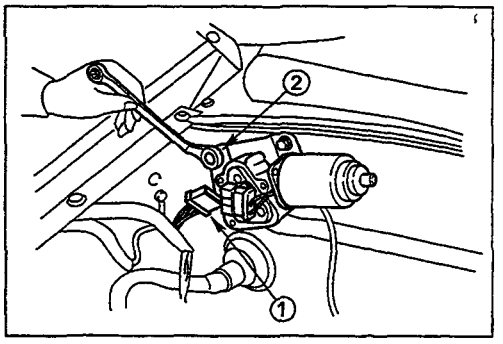

825RV069

WIPER MOTOR AND LINKAGE

Removal

1. Disconnect the wiper motor connector ①.
2. Remove the wiper motor bracket screws ②.

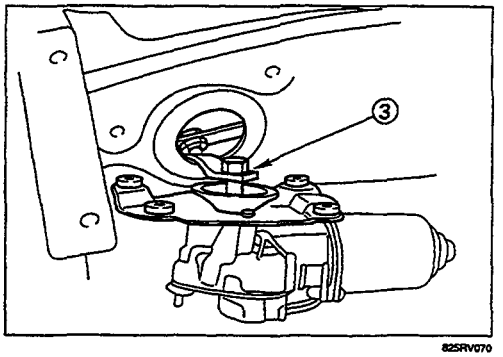

825RV070

3. Disconnect the wiper motor from the wiper linkage at the crank arm ③.

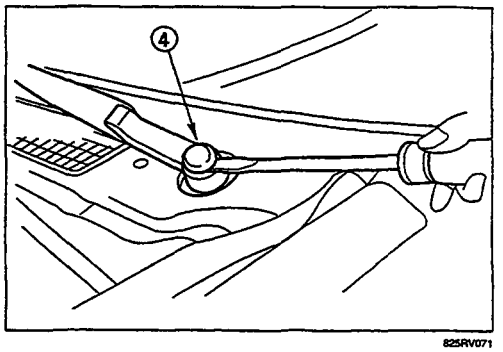

825RV071

4. Disconnect the wiper arm nut cap ④.

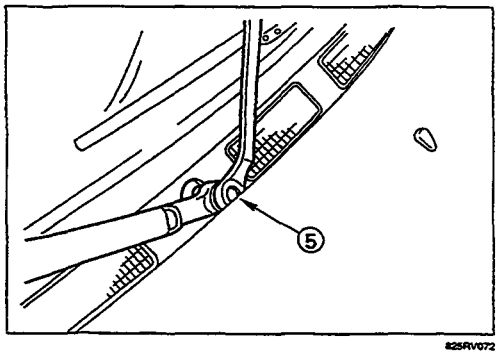

825RV072

5. Remove the wiper arm nut ⑤.
6. Remove the wiper arm with blade.

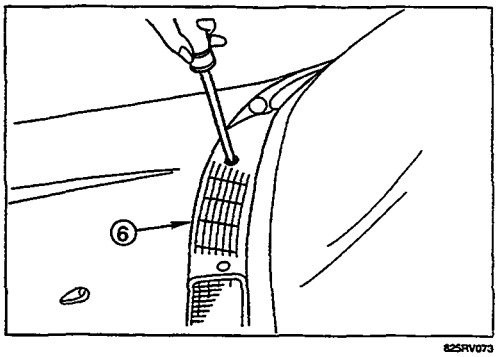

825RV073

7. Remove the vent cowl cover ⑥.

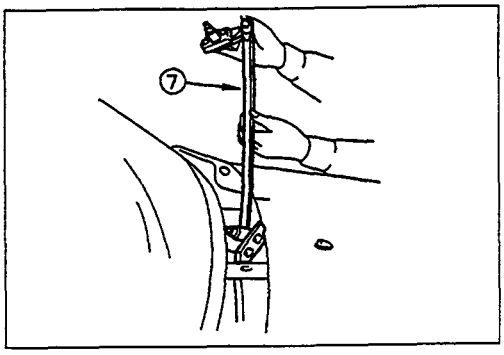

8. Remove the wiper linkage (7) from the access hole.

Installation

Follow the REMOVAL procedure in the reverse order to install the wiper motor and linkage.

Pay close attention to the important points mentioned in the following paragraphs.

Wiper Linkage

Take care not to scratch the painted surface of the body when installing the wiper linkage to the body.

In case crank arm of wiper motor is removed, confirm the position of auto Stop prior to reinstall the crank arm to the wiper motor.

Crank Arm Nut Torque	kg•m(lb.ft/N•m)
1.4 ± 0.2 (10 ± 1.4/13.7 ± 2.0)	

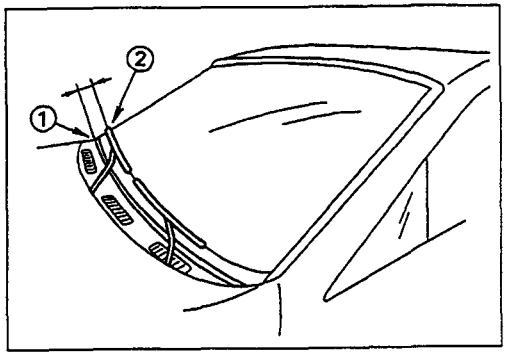

Wiper Blade Position

Confirm the auto stop position of wiper motor prior to the installation of the wiper blade and arm.

The distance between the vent cowl cover rubber seat 1 and the wiper blade edge (2) is 35 - 40 mm.

Wiper Arm Nut

Tighten the wiper arm nut to the specified torque.

Wiper Arm Nut Torque	kg•m (lb. ft/N•m)
1.4 ± 0.2 (10 ± 1.4/13.7 ± 2.0)	

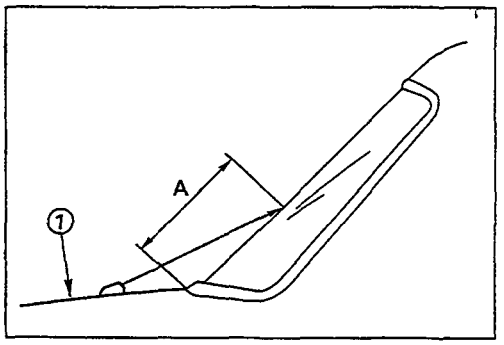

825RV076

Windshield Washer Spray

Be sure that the engine hood ① is completely closed before checking the windshield washer spray adjustment.

Windshield Washer Spray Position	mm (in)
A	Approximately 300 (11.8)

Connector

Be absolutely sure that the wiper motor connector is securely connected.

This will prevent a poor contact and an open circuit.

Note:

Windshield wiper arm and blade assembly configurations are different for the right-hand and left-hand side of the vehicle.

Be careful not to confuse the right-hand and left-hand side assemblies.

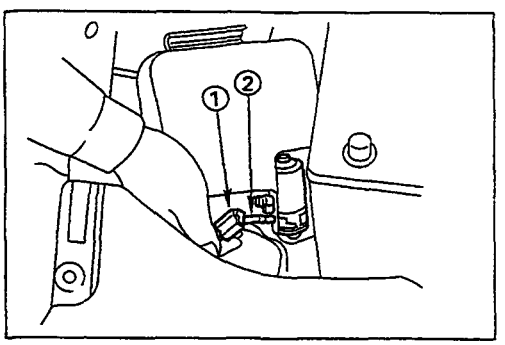

825RV077

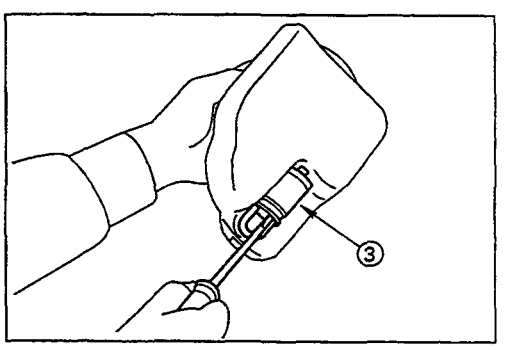

825RV078

WASHER TANK MOTOR

Removal

1. Remove the washer tank bolts.
2. Disconnect the connector ①.
3. Disconnect the water hose ②.
4. Remove the washer tank motor ③.

Installation

Follow the removal procedure in the reverse (
install the washer tank motor.

Pay close attention to the important points ment
the following paragraphs.

Connector

Be absolutely sure that the washer tank motor cc
is securely connected.

This will prevent a poor contact and an open circu

METER, WARNING LIGHT AND INDICATER LIGHT PARTS LOCATION (PETROL ENGINE - RHD)

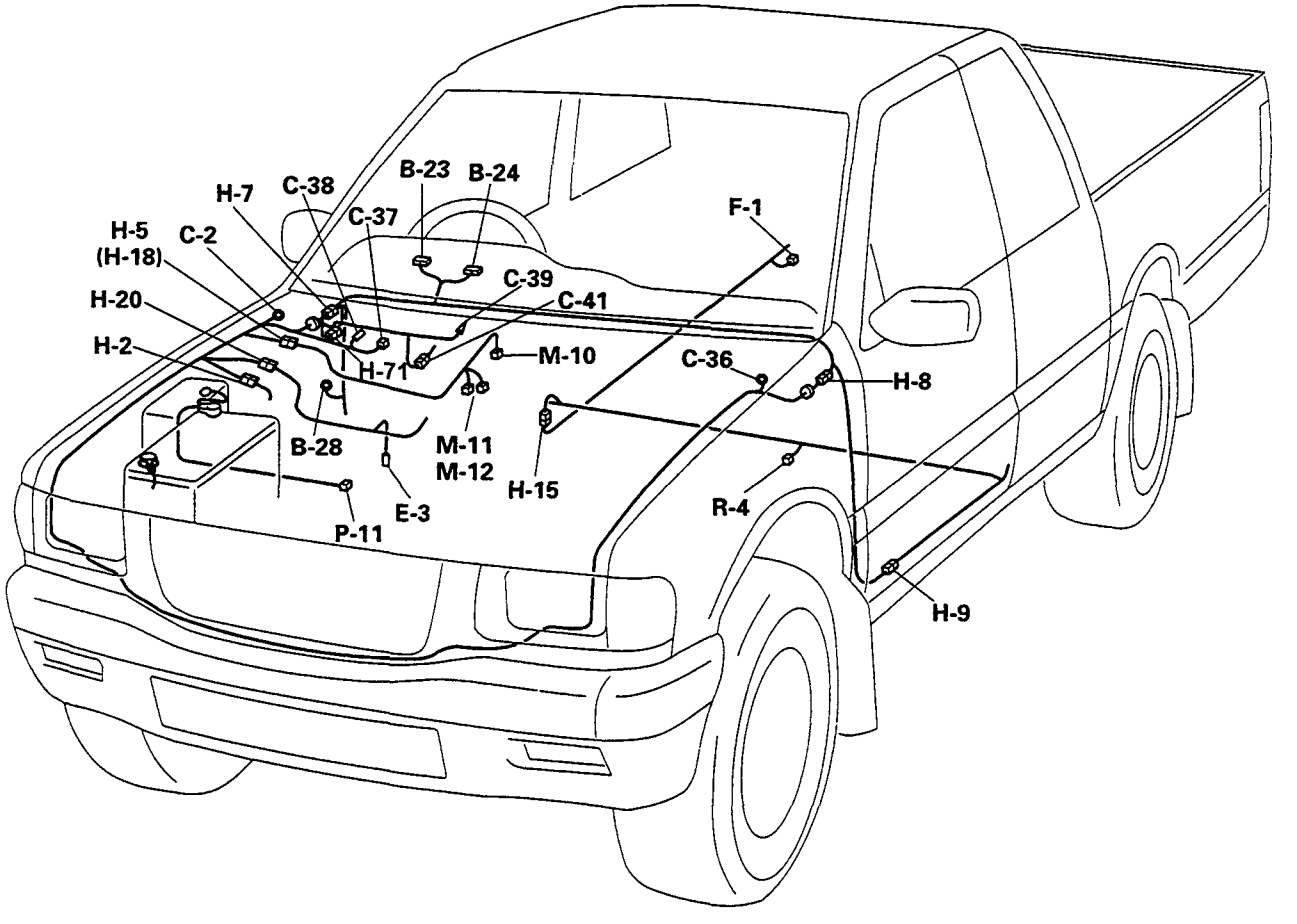

PARTS LOCATION (DIESEL ENGINE - RHD)

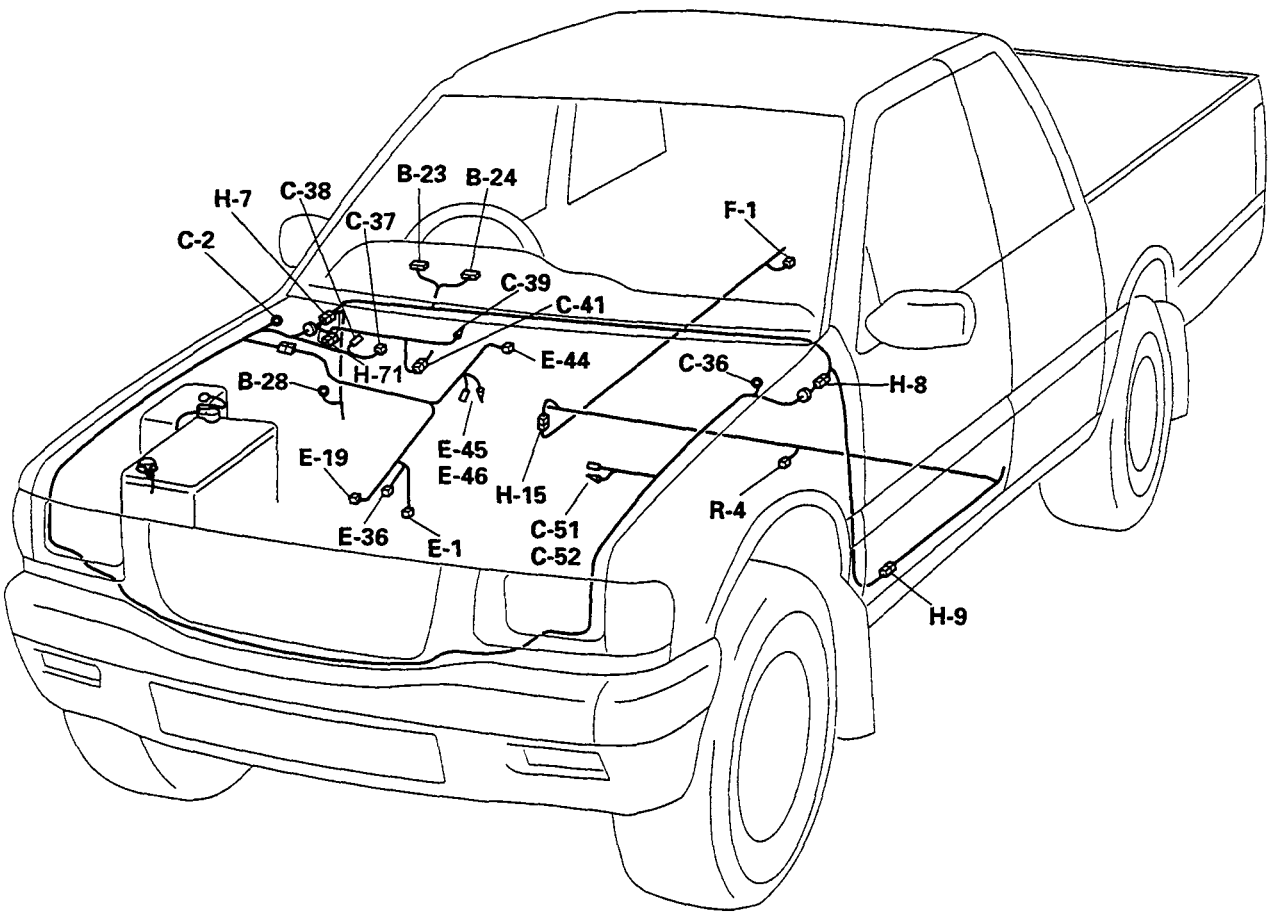

CIRCUIT DIAGRAM (W/O TACHOMETER - PETROL ENGINE)

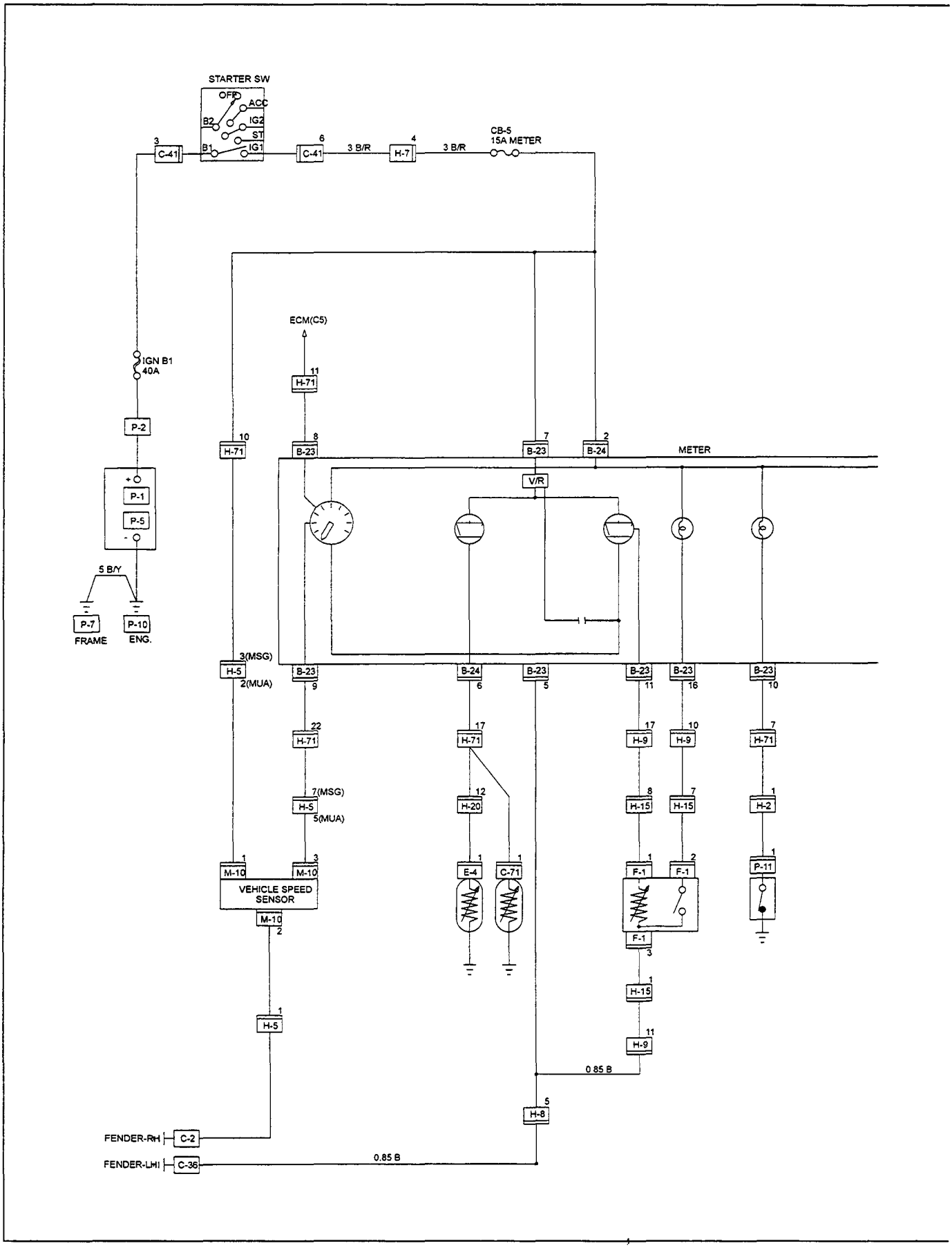

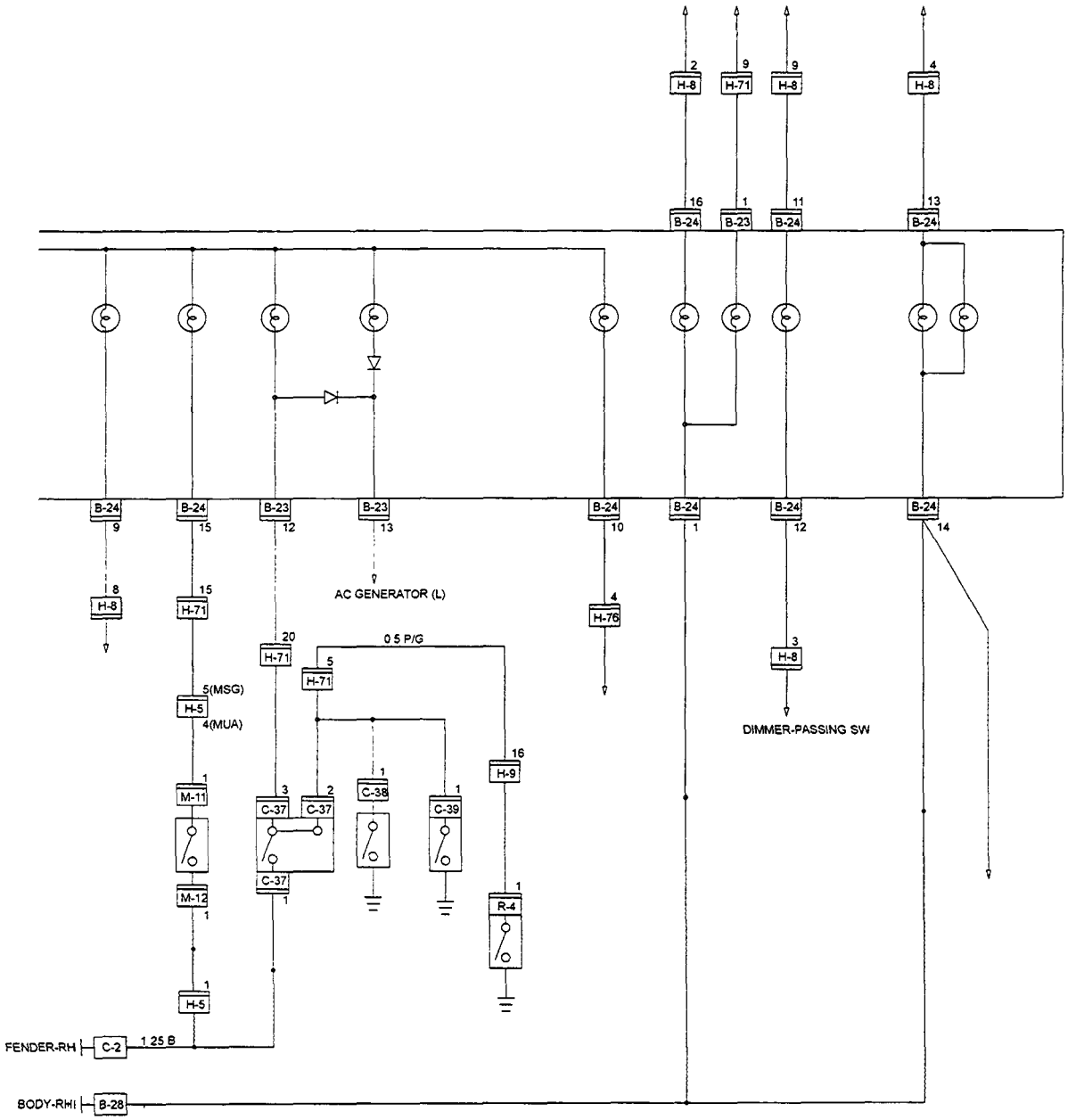
H-8
H-71
H-8
H-8
B-24
B-23
B-24
B-24
B-24
B-23
B-23
B-24
B-24
B-24
B-24
H-8
H-71
AC GENERATOR (L)
H-76
H-71
0.5 P/G
H-71
H-5
5(MSG)
4(MUA)
H-8
DIMMER-PASSING SW
H-9
M-11
C-37
C-37
C-38
C-39
C-37
M-12
R-4
H-5
FENDER-RH
C-2
1.25 B
BODY-RHI
B-28

CIRCUIT DIAGRAM (W/O TACHOMETER - DIESEL ENGINE)

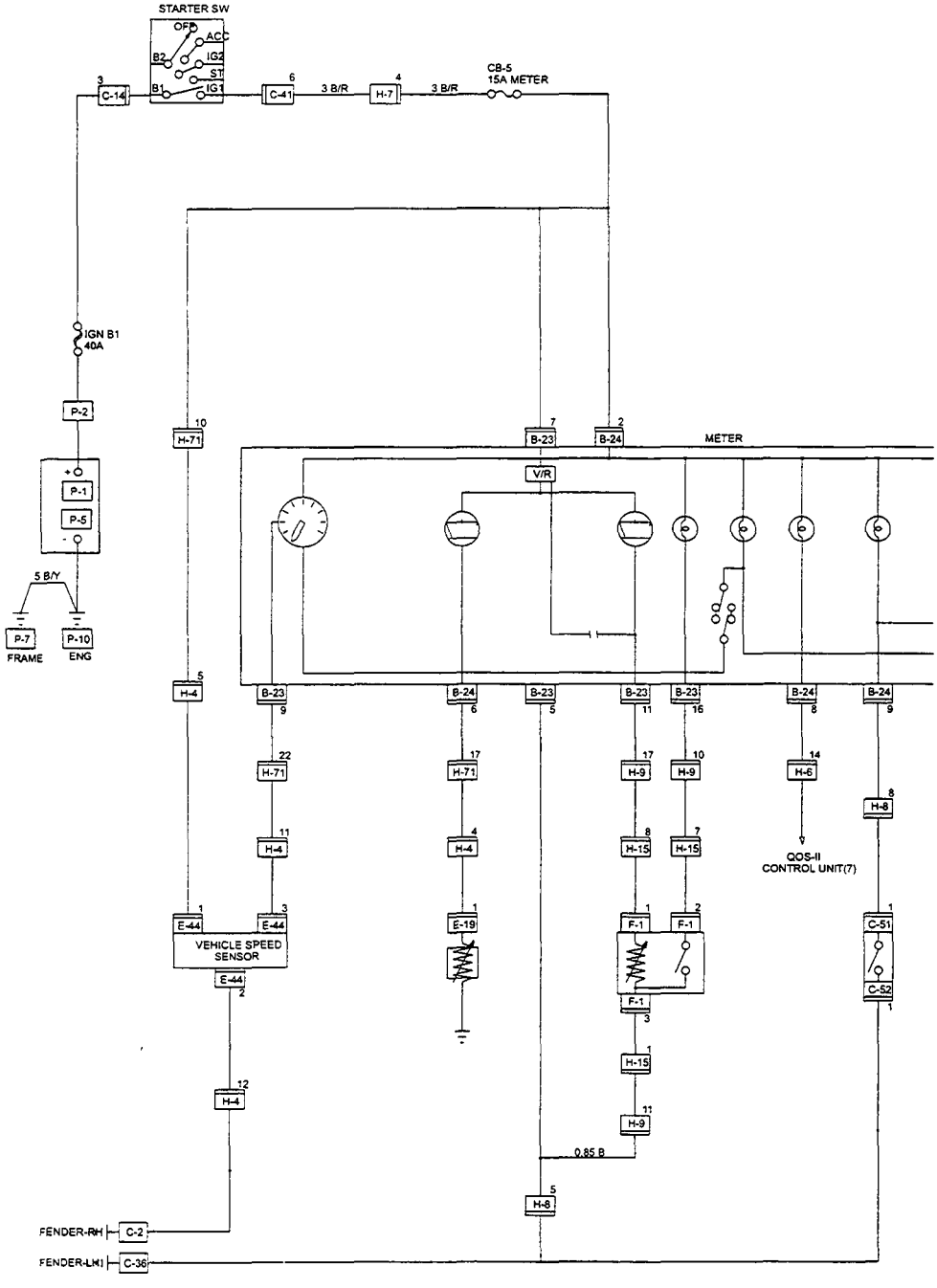

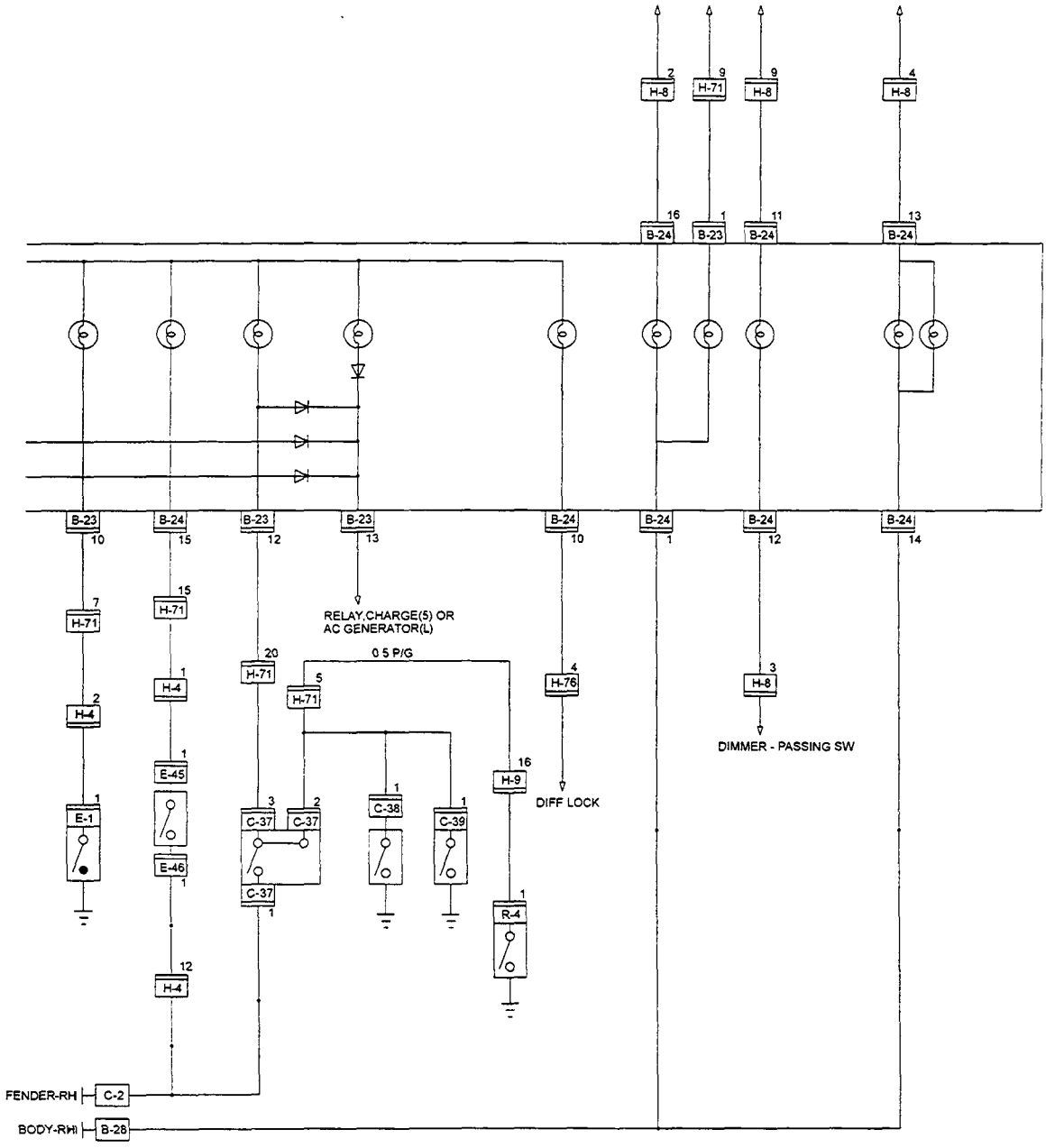
H-8
H-71
H-8
H-8
B-24
B-23
B-24
B-24
B-23
B-24
B-23
B-23
B-24
B-24
B-24
B-24
H-71
H-71
H-4
H-4
E-45
E-1
E-46
H-4
H-71
H-71
C-37
C-37
C-37
C-38
C-39
H-9
R-4
H-76
H-8
RELAY,CHARGE(5) OR
AC GENERATOR(L)
0 5 P/G
DIFF LOCK
DIMMER - PASSING SW
FENDER-RH
C-2
BODY-RH
B-28

CIRCUIT DIAGRAM (W/TACHOMETER - DIESEL ENGINE)

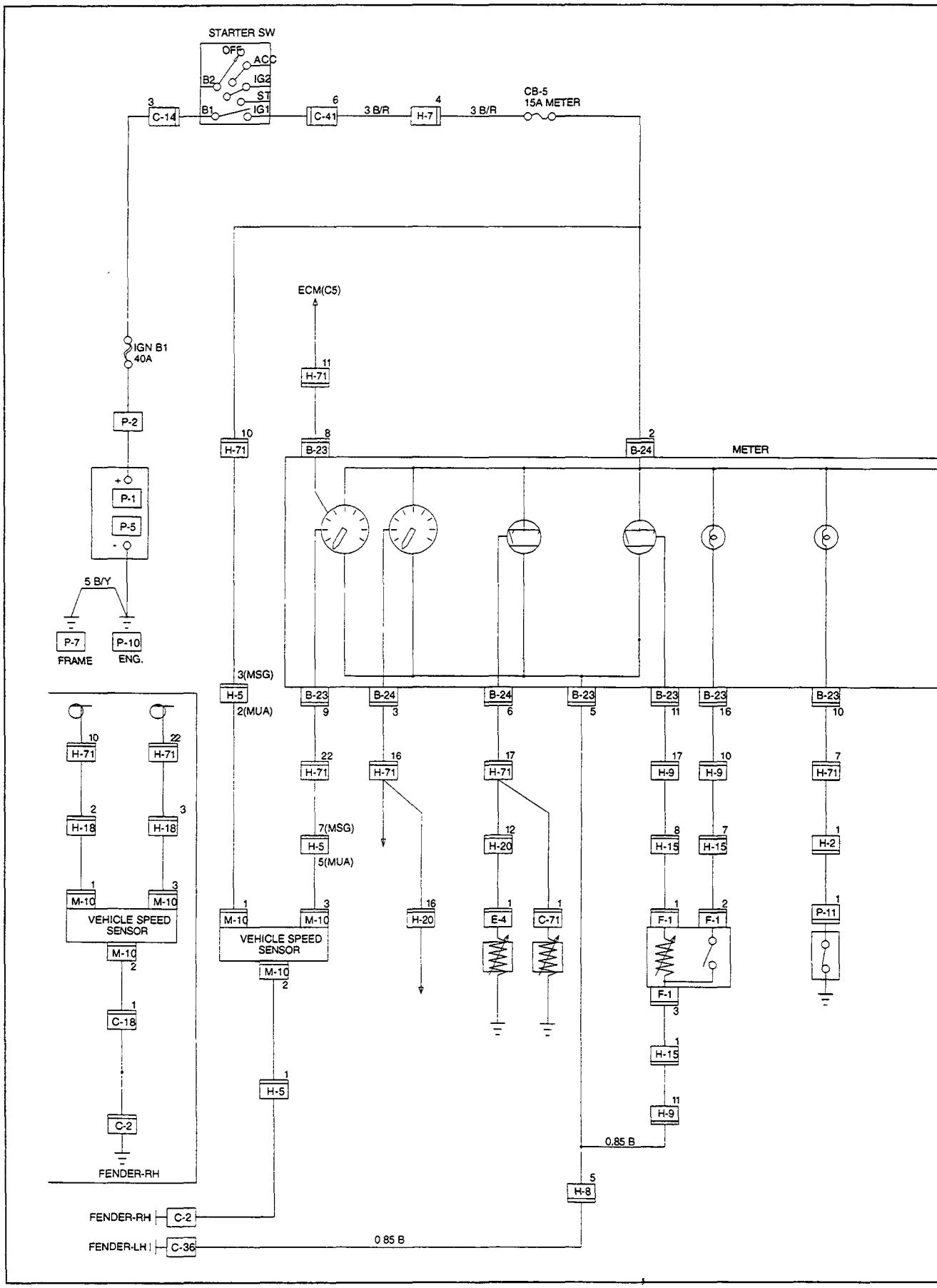

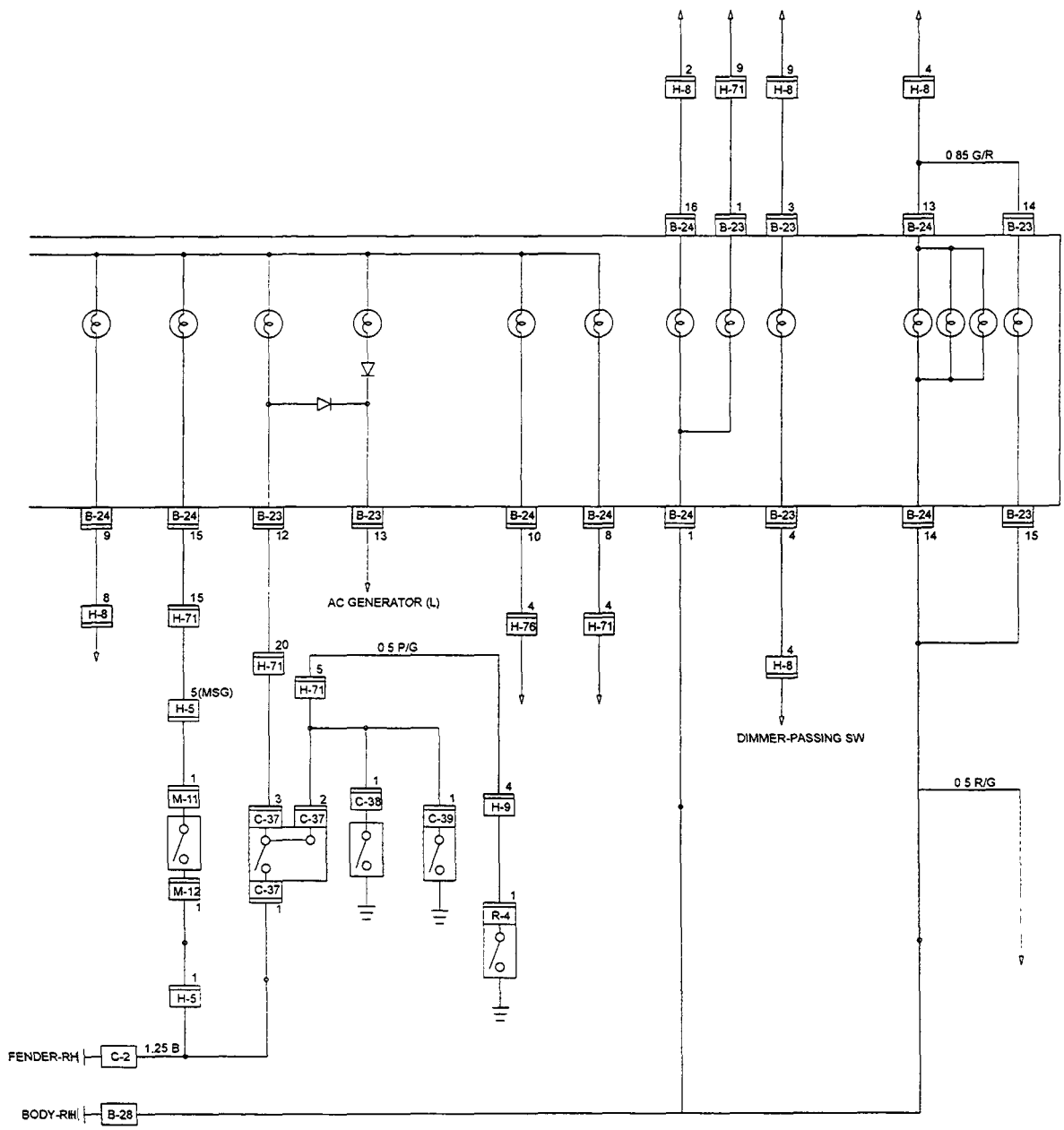
H-8
H-71
0 85 G/R
B-24
B-23
AC GENERATOR (L)
H-76
0 5 P/G
H-5
5(MSG)
M-11
M-12
C-37
C-38
C-39
H-9
R-4
DIMMER-PASSING SW
0 5 R/G
FENDER-RH
C-2
1.25 B
BODY-RH
B-28

CIRCUIT DIAGRAM (W/TACHOMETER - DIESEL ENGINE)

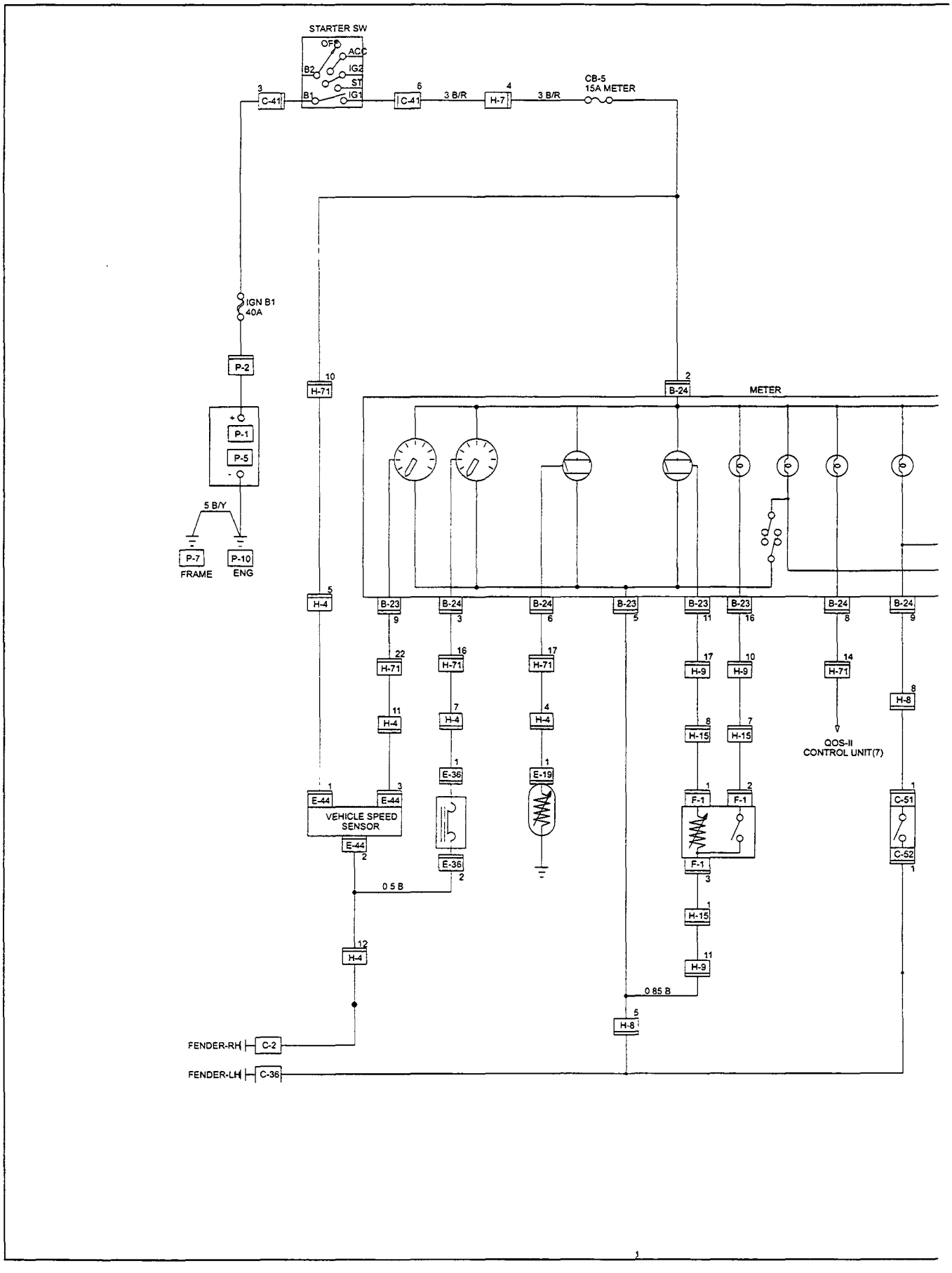

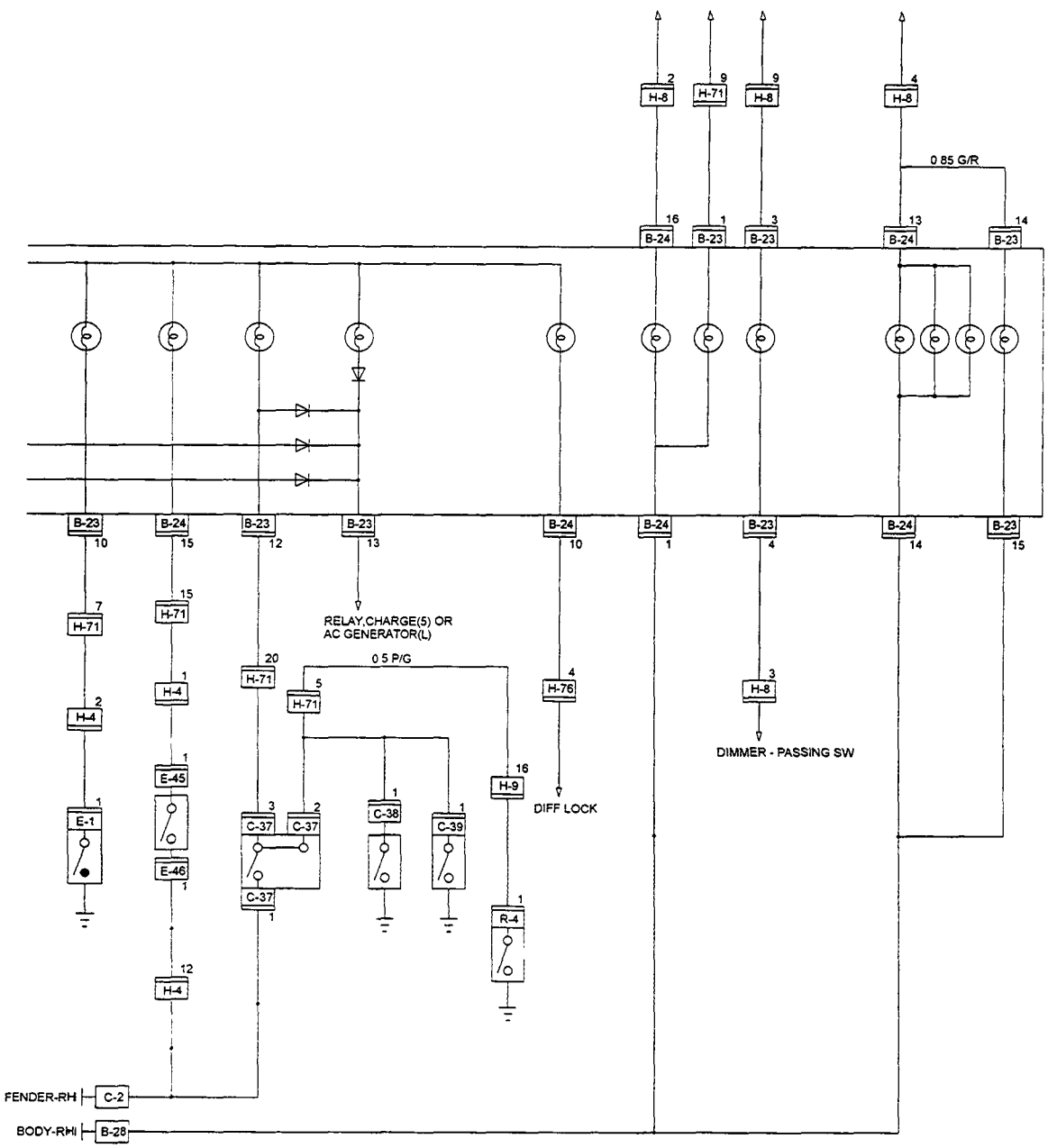
H-8
H-71
H-8
H-8
0 85 G/R
B-24
B-23
B-23
B-24
B-23
B-23
B-24
B-23
B-23
B-24
B-24
B-23
B-24
B-23
H-71
H-71
RELAY,CHARGE(5) OR
AC GENERATOR(L)
0 5 P/G
H-71
H-71
H-4
H-4
H-76
H-8
DIMMER - PASSING SW
E-45
E-1
E-46
H-9
DIFF LOCK
C-37
C-37
C-37
C-38
C-39
R-4
H-4
FENDER-RH
C-2
BODY-RHI
B-28

TROUBLE SHOOTING

SPEEDOMETER

1. Speedometer and odometer do not function

Checkpoint		Trouble Cause	Countermeasure
Check the vehicle speed sensor output (4 pulses/1 rotation)	NG	Vehicle speed sensor malfunction	Replace the vehicle speed sensor
OK			
Continuity between the vehicle speed sensor and the meter, or the fuse (LHD: CB-7 (15A)/RHD: CB-5 (15A)) and the ground	NG	Open circuit or poor connector contact	Repair an open circuit in the circuit or a poor connection at the connectors
OK			
Use a meter tester to check the speedometer function	NG	Speedometer malfunction	Replace the speedometer

2. Speedometer needle fluctuates (May be wide fluctuation)

Check the speed sensor output by using the oscilloscope	NG	Vehicle speed sensor malfunction, or open circuit or poor connector contact	Replace the vehicle speed sensor, or repair an open circuit in the circuit or a poor connection at the connectors
OK			
Use a meter tester to check the speedometer function	NG	Speedometer malfunction	Replace the speedometer

3. Speedometer needle jumps erratically

Checkpoint		Trouble Cause		Countermeasure
Check the vehicle speed sensor output by using the oscilloscope	NG	Vehicle speed sensor malfunction, or open circuit or poor connector contact	—	Replace the vehicle speed sensor, or repair an open circuit in the circuit or a poor connection at the connectors
OK				
Use a meter tester to check the speedometer function	NG	Speedometer malfunction	—	Replace the speedometer

Inspection of a waveform by oscilloscope

1. Connect a resistance of 1.3 to 5k ohm (1.4W or more) between the harness side connectors 2 B-24 and 9 B-23 of the meter.

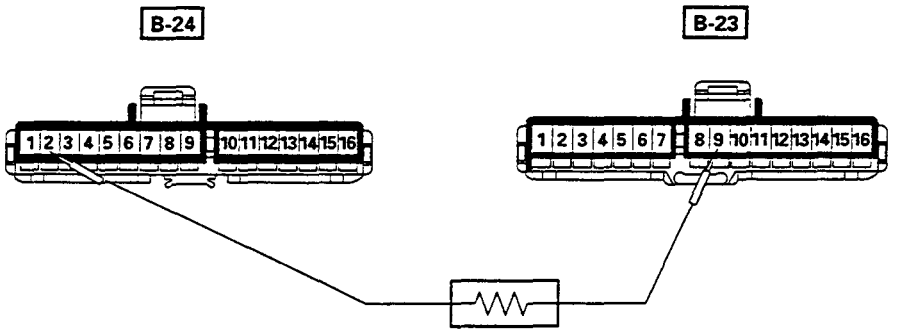

2. Install a speedometer tester.
2. Turn on the starter SW.
3. Check the waveform at the time when the vehicle speed is at 60km/h.

Normal waveform

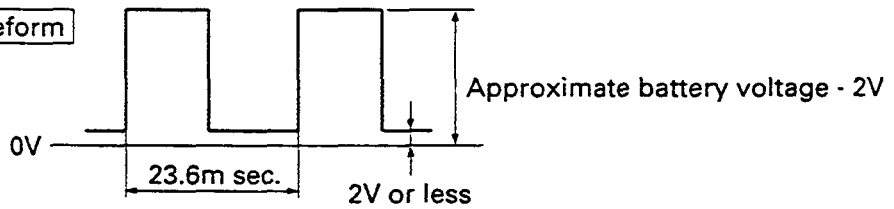

825RV108

4. Trip odometer does not reset

Check at other mileage figures given by meter tester (Reset should be made to zero kilometer)	NG	Faulty reset mechanism or worn gear	—	Replace the speedometer

TACHOMETER

1. Tachometer does not function when engine is running

Checkpoint		Trouble Cause		Countermeasure
Pulse between connector 3 B-24 and the ground when engine is running (Should be pulse present)	NG	Tacho sensor malfunction, or open circuit or poor connector contact	—	Replace the tacho sensor, or repair open circuit or connector contact
OK				
Tachometer function	NG	Tachometer malfunction	—	Replace the tachometer

2. Meter needle fluctuates (May be wide fluctuation)

Use a meter tester to check the tachometer function	NG	Tachometer malfunction	—	Replace the tachometer

TEMPERATURE GAUGE AND THERMO UNIT

1. No temperature indicates at all

Checkpoint		Trouble Cause	Countermeasure
Thermo unit continuity between connector 1 E-4 (or 1 C-71) and the ground (Diesel engine: 1 E-19 and the ground)	NG	Thermo unit malfunction	Replace the thermo unit
OK			
Gauge function 1. Disconnect the unit connector then connect 3.4W bulb to wire harness side with ground 2. Check indicating point when starter SW. is ON position (Temperature should indicate)	NG	Gauge malfunction	Replace the temperature gauge
OK			
Continuity between 1 E-4 (or 1 C-71) and 6 B-24 (Diesel engine: 1 E-19 and 6 B-24	NG	Open circuit or poor connector contact	Repair open circuit or connector contact

2. Temperature gauge incorrect readings in all ranges

Thermo unit resistance between connector 1 E-4 (or 1 C-71) and the ground (Diesel engine: 1 E-19 and the ground) when disconnecting the connector (Specified resistance should indicate)	NG	Thermo unit malfunction	Replace the thermo unit

FUEL GAUGE AND FUEL TANK UNIT

1. No fuel level indicates at all

Checkpoint		Trouble Cause		Countermeasure
Tank unit continuity between connector 1 F-1 and ground	NG	Open circuit inside the tank unit	—	Replace the tank unit
OK				
Fuel gauge function 1. Disconnect the tank unit connector then connect 3.4W bulb to wire harness side 2. Check indicating point when starter SW. is ON position (Fuel level should indicate)	NG	Gauge malfunction	—	Replace the fuel gauge
OK				
Continuity between connectors 11 B-23 and 1 F-1	NG	Open circuit or poor connector contact	—	Repair open circuit or connector contact

2. Fuel gauge gives incorrect readings in all ranges

Tank unit resistance position with the float at checking points (Specified resistance should indicate)	NG	Tank unit malfunction	—	Replace the tank unit

WARNING AND INCIDATOR LIGHT

1. When the parking brake lever is pulled, the indicator light does not light up

Checkpoint		Trouble Cause	Countermeasure
Brake indicator light bulb continuity	NG	Bulb burned out or loose contact	Replace or reinstall the bulb
OK			
Parking brake SW. installation position and function	NG	Incorrect SW. adjustment or poor SW. point contact	Adjust or replace the parking brake SW.
OK			
Continuity between the parking brake SW. connector 1 C-39 (4x4: 1 R-4) and 12 B-23	NG	Open circuit or poor connector contact	Repair open circuit or connector contact
OK			
Continuity between the parking brake SW. connector 1 C-39 (4x4: 1 R-4) and the ground when the parking brake is operated	NG	Parking brake SW. malfunction	Replace the parking brake SW.

2. Even when the parking brake lever is pulled, the indicator light does not go off

Checkpoint		Trouble Cause	Countermeasure
Parking brake SW. installation position and function	NG	Incorrect the parking brake SW. adjustment or brake SW. faulty	Adjust the SW. installation position or replace the parking brake SW.
OK			
Check to see if the indicator light goes off when the parking brake SW. connector 1 C-39 (4x4: 1 R-4) is disconnected	NG	Brake fluid level SW. or vacuum SW. faulty or short circuit	Replace the brake fluid level SW., or vacuum SW., or repair a short circuit between the parking brake SW. connector 1 C-39 (4x4: 1 R-4) and 12 B-23 or the brake fluid level SW. connector 3 C-37 and 12 B-23, or the vacuum SW. connector 1 C-38 and 12 B-23

3. Oil pressure warning light does not go off while engine is running

Engine oil pressure	NG	Refer to ENGINE Section	Refer to ENGINE Section
OK			
Check to see if the warning light goes off when the oil pressure SW. connector 1 P-11 (Diesel engine: 1 E-1) is disconnected	NG	Short circuit	Repair a short circuit between 1 P-11 and 10 B-23 (Diesel engine: 1 E-1 and 10 B-23)
OK			
Continuity between the oil pressure SW. connector 1 P-11 (Diesel engine: 1 E-1) and the body ground when the engine is operating	NG	Oil pressure unit (or oil pressure SW) faulty	Replace the oil pressure unit (or the oil pressure SW.)

4. Even when the fuel filter is filled with water, the warning light does not light up

Checkpoint		Trouble Cause	Countermeasure
Sedimenter warning light bulb continuity	NG	Bulb burned out or loose contact	Replace or reinstall the bulb
OK			
Fuel filter SW. function	NG	SW. malfunction	Replace the fuel filter SW.
OK			
Continuity between the fuel filter SW. harness side connector 1 C-51 and 9 B-24 or 1 C-52 and C-36	NG	Open circuit or poor connector contact	Repair open circuit or connector contact

5. Even when the fuel filter is empty, the warning light does not go off

Check to see if the warning light goes off when the fuel filter SW. connectors C-51 and C-52 are disconnected	NG	Short circuit	Repair a short circuit between 1 C-51 and 9 B-24
OK			
Fuel filter SW. function	NG	SW. malfunction	Replace the fuel filter SW.

REMOVAL AND INSTALLATION

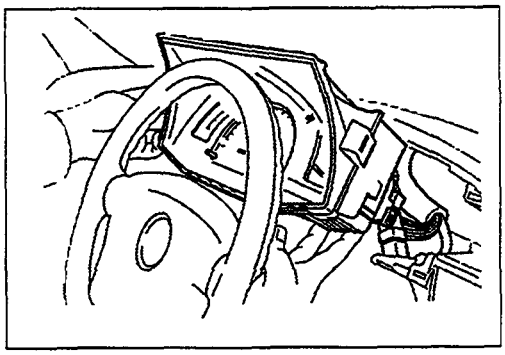

METRE ASSEMBLY

Removal

1. **Instrument Panel Driver Lower Cover**
   - Refer to the REMOVAL steps of INSTRUMENT PANEL in Section 10 "CAB".
2. **Lower Cluster Assembly**
   - Refer to the REMOVAL steps of INSTRUMENT PANEL in Section 10 "CAB".
3. **Instrument Panel Cluster Assembly**
   - Refer to the REMOVAL steps of INSTRUMENT PANEL in Section 10 "CAB".
4. **Metre Assembly**
   - Remove four screws of the metre assembly.
   - Disconnect the metre connectors.

Installation

Follow the REMOVAL procedure in the reverse order to install the metre.

Pay close attention to the important points mentioned in the following paragraphs.

Connector

Be absolutely sure that the metre connectors are securely connected.

This will prevent a poor contact and an open circuit.

Wire Harness

Do not pinch the wire harness between the cluster and the meter hood during the meter assembly installation procedure.

Wire damage will result.

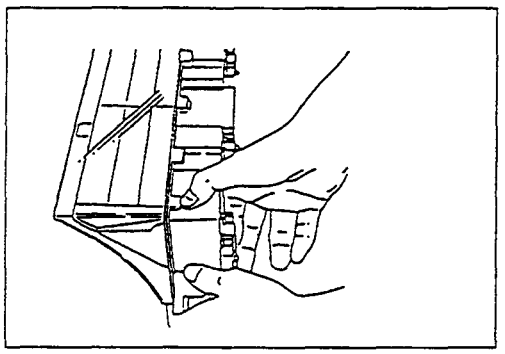

825RV062

METERS AND GAUGES

Removal

1. **Meter Assembly**
   - Refer to "METER ASSEMBLY" removal steps in this system.
2. **Meter Glass**
3. **Meter Needless**
   - Pull out the needles of speedometer and tachometer
4. **Meter Board**
   - Loosen four fixing screws.
5. **Meters and Gauges**

Installation

To Install, follow the removal steps in the reverse order.

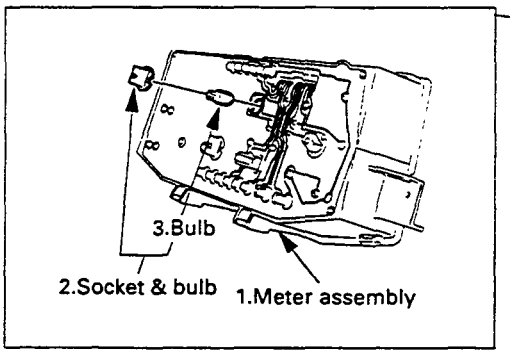

825RV063

WARNING LIGHT BULB, INDICATOR LIGHT BULB AND ILLUMINATION LIGHT BULB

Removal

Turn the bulb socket counterclockwise and pull the bulb out.

Installation

To Install, follow the removal steps in the reverse order.

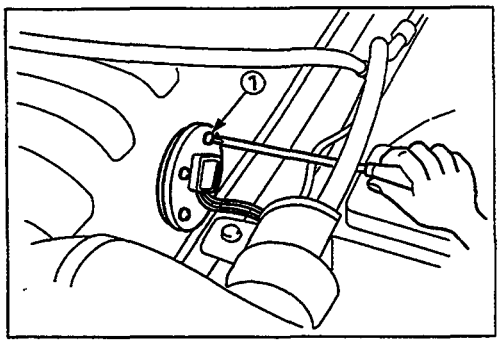

140RV008

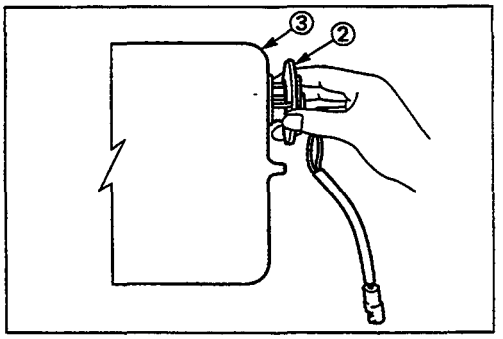

140RV009

FUEL TANK UNIT

Removal

1. Disconnect the fuel tank unit connector.
2. Loosen the screws ①.
3. Remove the fuel tank unit ② from the fuel tank ③.

Installation

Follow the removal procedure in the reverse order to install the fuel tank unit.

Pay close attention to the important points mentioned in the following paragraphs.

Rubber Seal

Be absolutely sure that the fuel tank unit rubber seal is correctly seated.

Connector

Be absolutely sure that the fuel tank unit connector is securely connected.

This will prevent a poor contact and an open circuit.

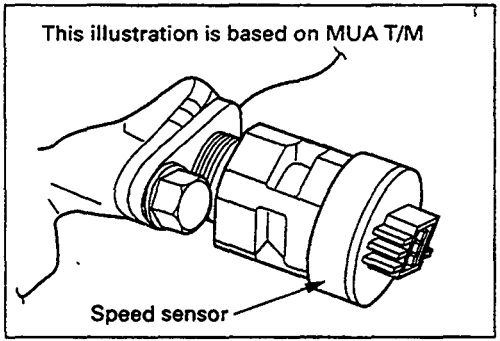

VEHICLE SPEED SENSOR (INSTALLED ON THE TRANSMISSION)

Removal

1. Disconnect the connector.
2. Remove the vehicle speed sensor body by rotating it.

Installation

To Install, follow the removal steps in the reverse order, noting the following point.

Tighten the vehicle speed sensor to the specified torque.

Vehicle Speed Sensor Tightening Torque kg·m (lb·ft/N·m)
2.5 ± 0.5 (18 ± 3.6 / 25 ± 4.9)

INSPECTION AND REPAIR

Warning, indicator and illumination light position
W/O Tachometer (Gasoline engine)

(This illustration is based on the Km/h meter)

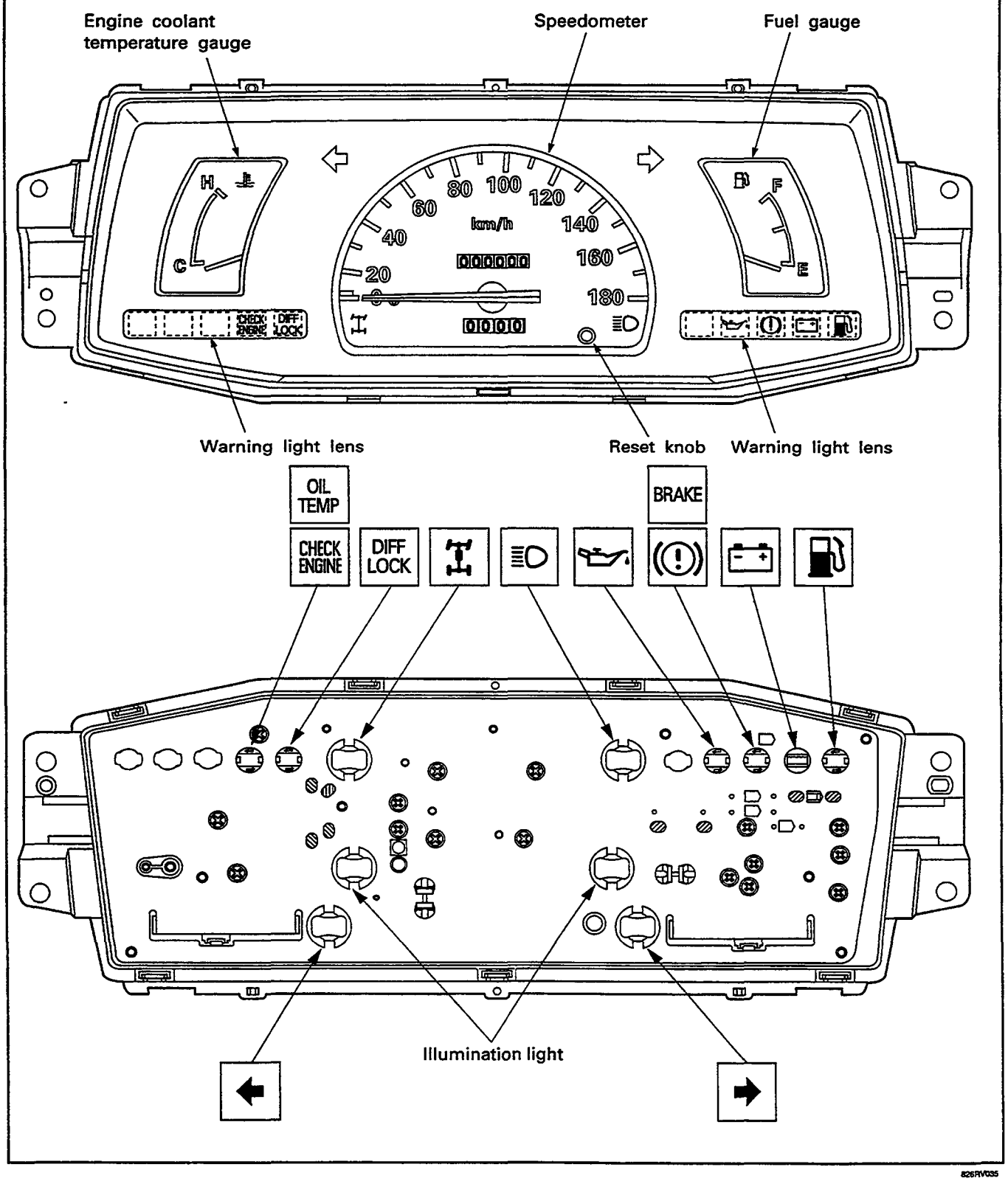

826RV035

W/O Tachometer (Diesel engine)

(This illustration is based on the Km/h meter)

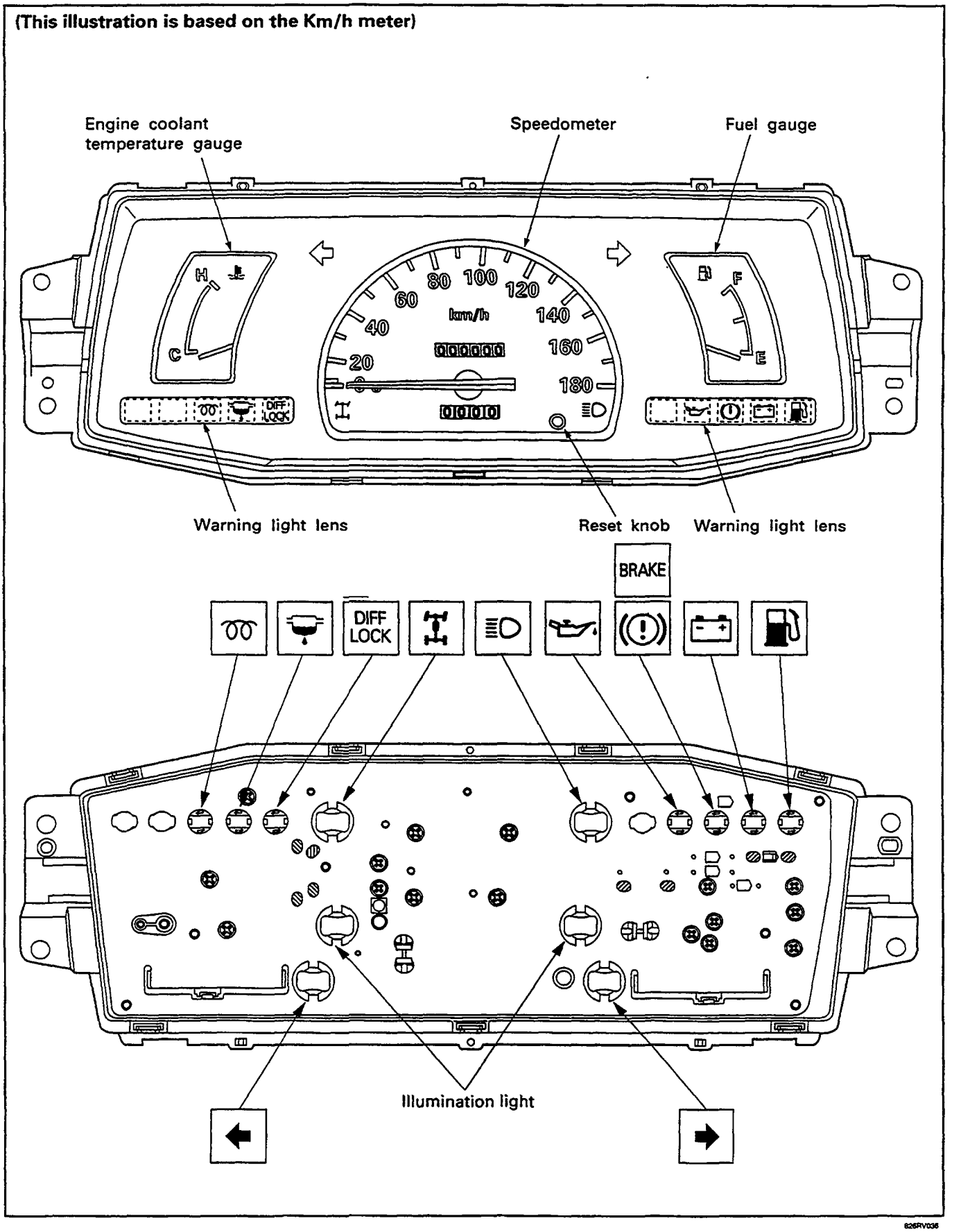

826RV036

W/ Tachometer (Gasoline engine)

(This illustration is based on the Km/h meter)

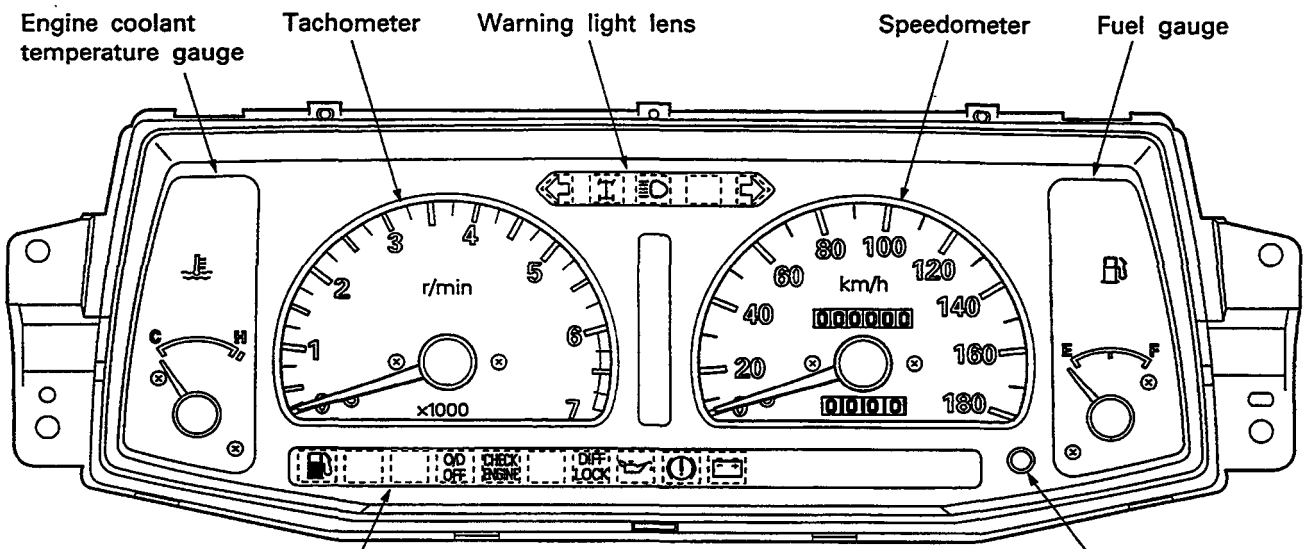

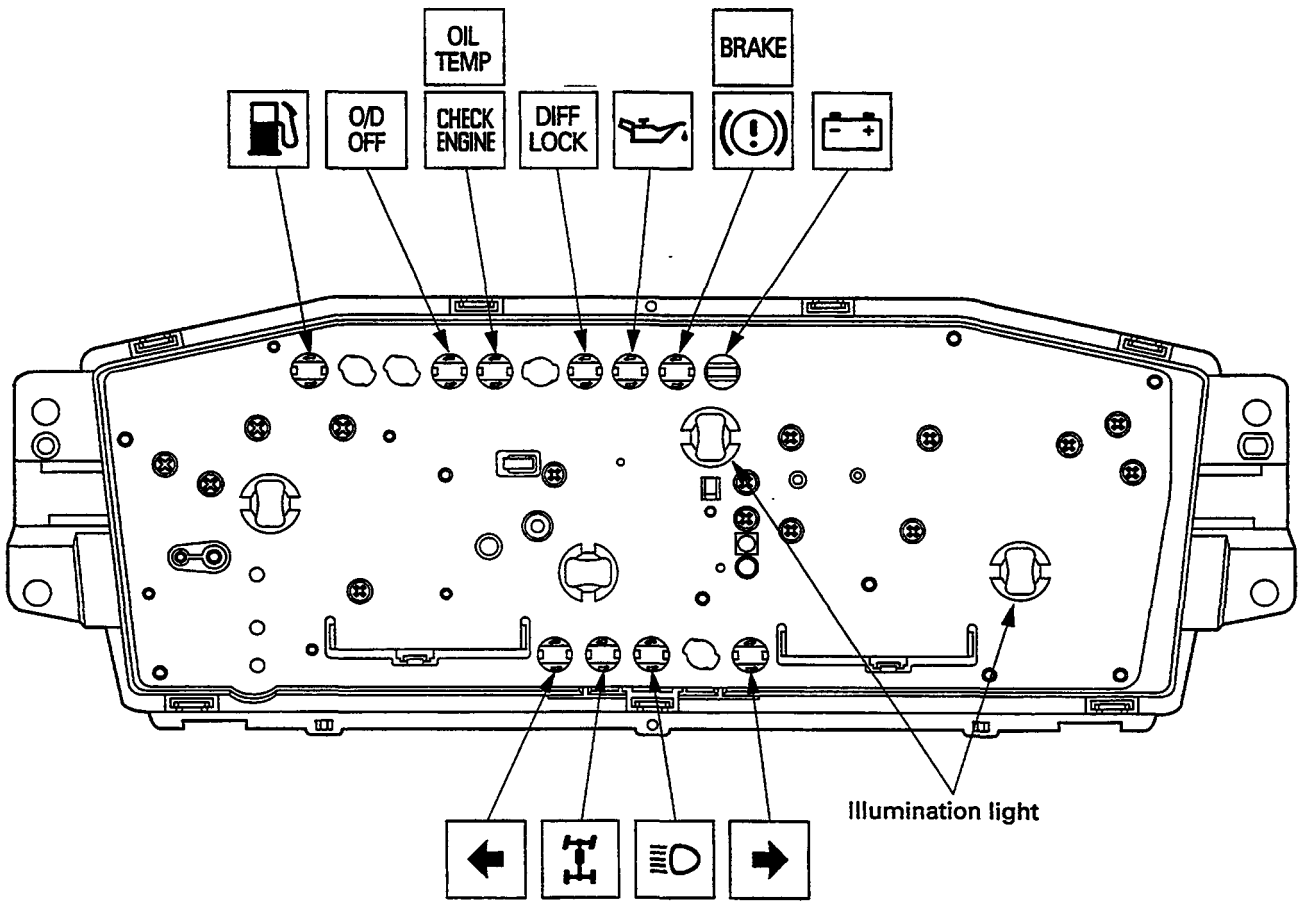

826RV031

W/ Tachometer (Diesel engine)

(This illustration is based on the Km/h meter)

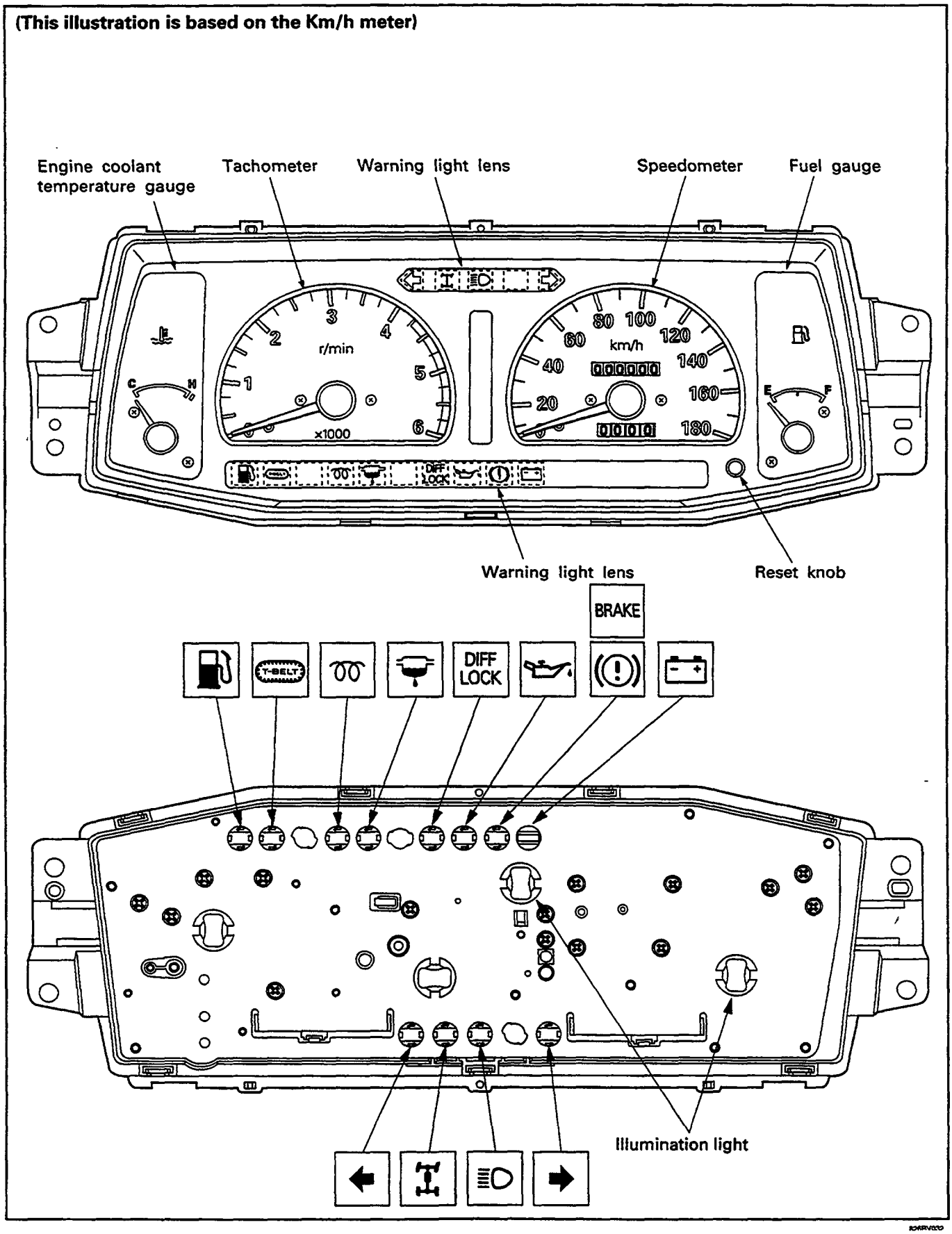

Meter connector pin arrangement
W/O Tachometer (Gasoline engine)

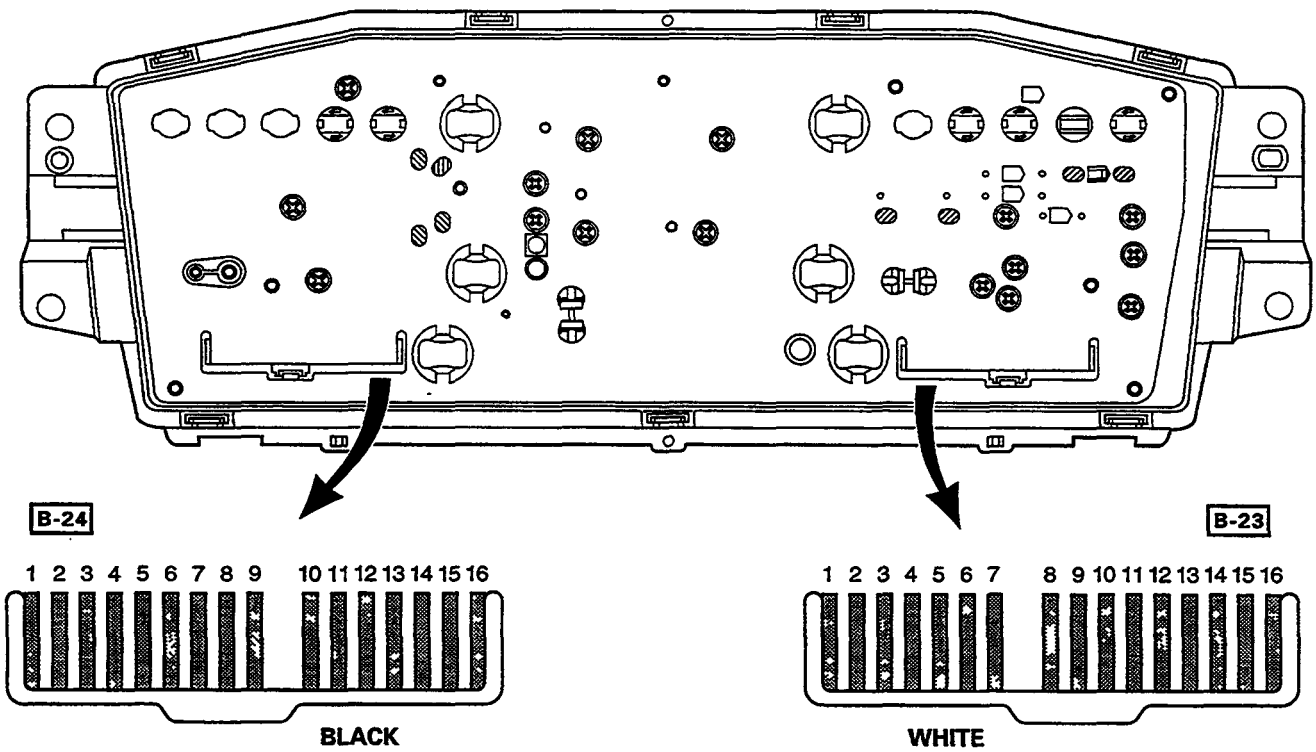

Connector No. / Terminal No.	B-24
1	Ground
2	Ignition
3	—
4	—
5	—
6	Engine coolant temperature gauge
7	—
8	—
9	Oil temp. warning light (Saudi Arabia only) Check engine warning light
10	Seat belt warning light (Saudi Arabia only) Diff. lock indicator light (South Africa only)
11	High-beam indicator light (+)
12	High-beam indicator light (–)
13	Illumination light (+)
14	Illumination light (–)
15	4WD indicator light
16	Turn signal indicator light (left)

Connector No. / Terminal No.	B-23
1	Turn signal indicator light (right)
2	—
3	—
4	—
5	Ground
6	—
7	Ignition
8	Speedometer
9	Speedometer
10	Oil pressure warning light
11	Fuel gauge
12	Brake warning light
13	Charge warning light
14	—
15	—
16	Fuel warning light

Meter connector pin arrangement
W/O Tachometer (Diesel engine)

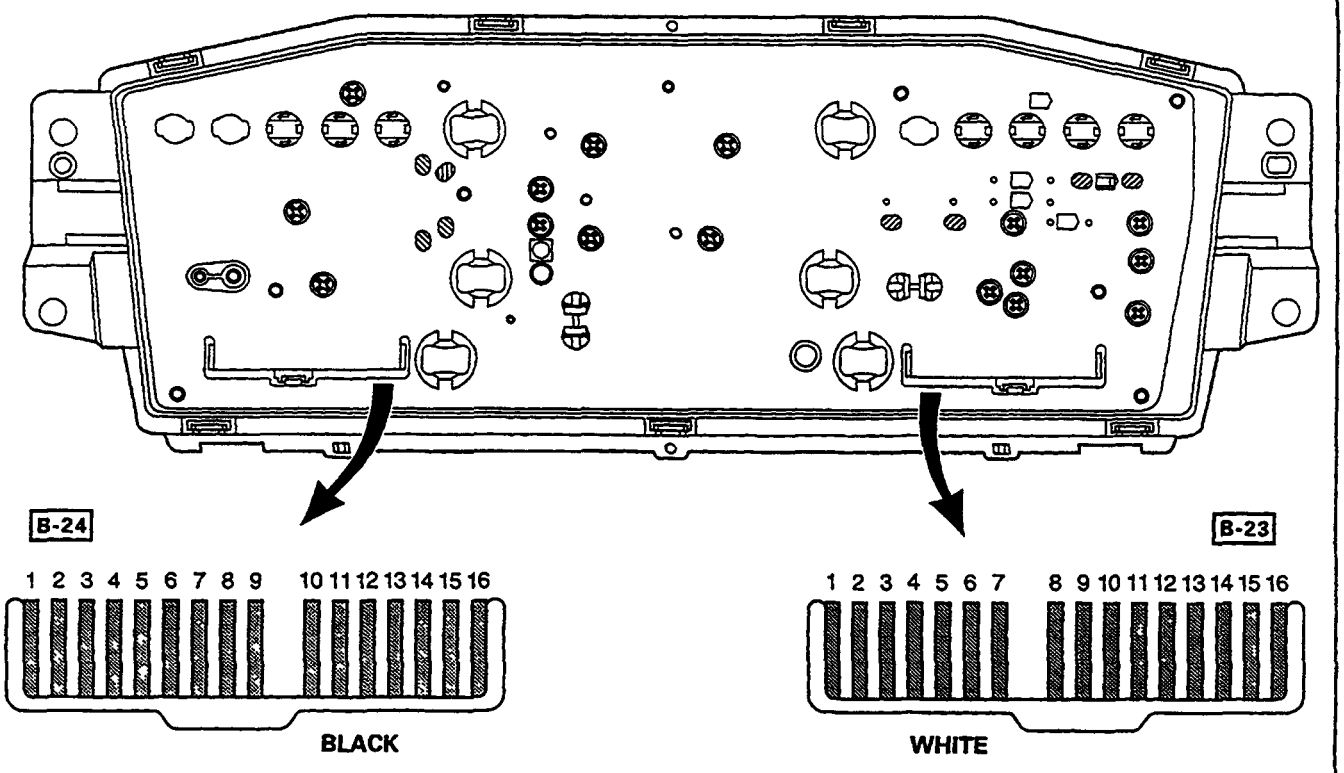

826RV037

Connector No. / Terminal No.	B-24
1	Ground
2	Ignition
3	—
4	—
5	—
6	Engine coolant temperature gauge
7	—
8	Glow indicator light
9	Sedimenter warning light
10	Seat belt warning light (Saudi Arabia only) Diff. lock indicator light (South Africa only)
11	High-beam indicator light (+)
12	High-beam indicator light (–)
13	Illumination light (+)
14	Illumination light (–)
15	4WD indicator light
16	Turn signal indicator light (left)

Connector No. / Terminal No.	B-23
1	Turn signal indicator light (right)
2	—
3	—
4	—
5	Ground
6	—
7	Ignition
8	Speedometer
9	Speedometer
10	Oil pressure warning light
11	Fuel gauge
12	Brake warning light
13	Charge warning light
14	—
15	—
16	Fuel warning light

Meter connector pin arrangement
W/ Tachometer (Gasoline engine)

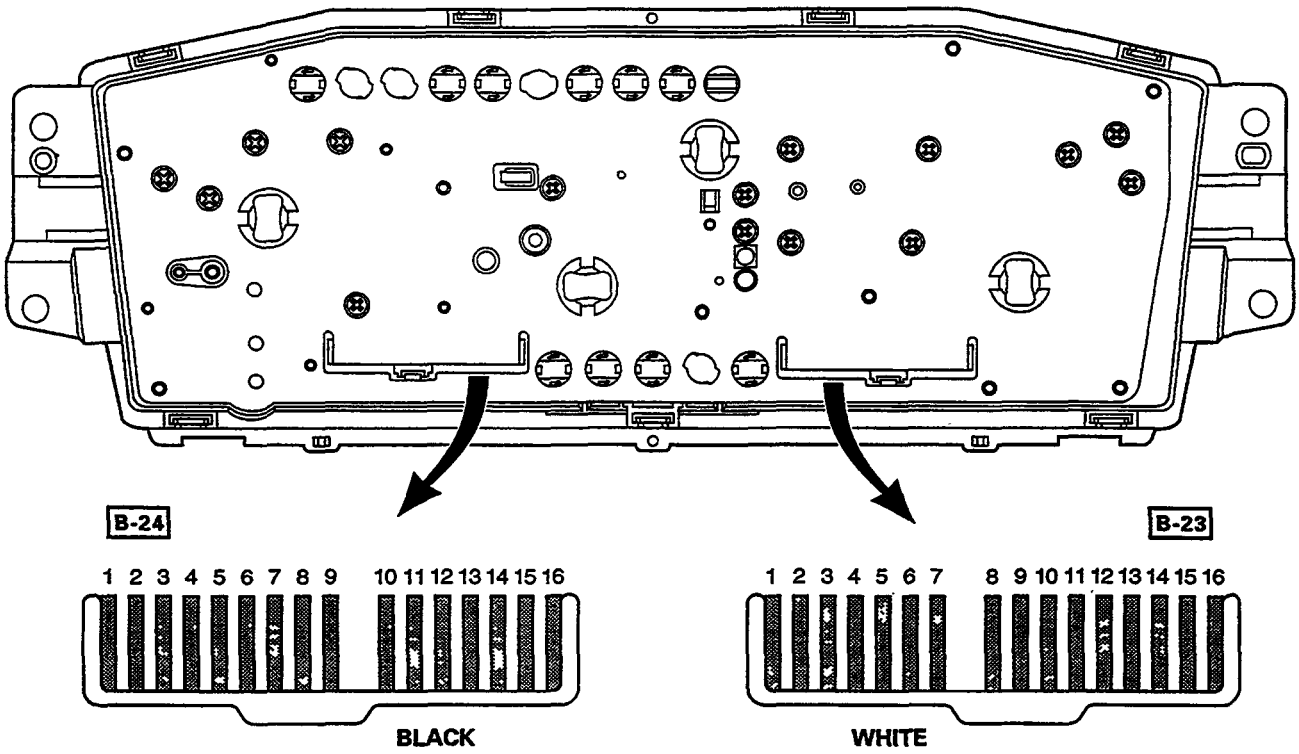

Connector No. / Terminal No.	B-24
1	Ground
2	Ignition
3	Tachometer
4	—
5	—
6	Engine coolant temperature gauge
7	—
8	O/D off indicator light (Australia: A/T)
9	Oil temp. warning light (Saudi Arabia only) Check engine warning light
10	Seat belt warning light (Saudi Arabia only) Diff. lock indicator light (South Africa only)
11	—
12	—
13	Illumination light (+)
14	Illumination light (–)
15	4WD indicator light
16	Turn signal indicator light (left)

Connector No. / Terminal No.	B-23
1	Turn signal indicator light (right)
2	—
3	High-beam indicator light (+)
4	High-beam indicator light (–)
5	Ground
6	—
7	—
8	Speedometer
9	Speedometer
10	Oil pressure warning light
11	Fuel gauge
12	Brake warning light
13	Charge warning light
14	Illumination light (+)
15	Illumination light (–)
16	Fuel warning light

Meter connector pin arrangement
W/ Tachometer (Diesel engine)

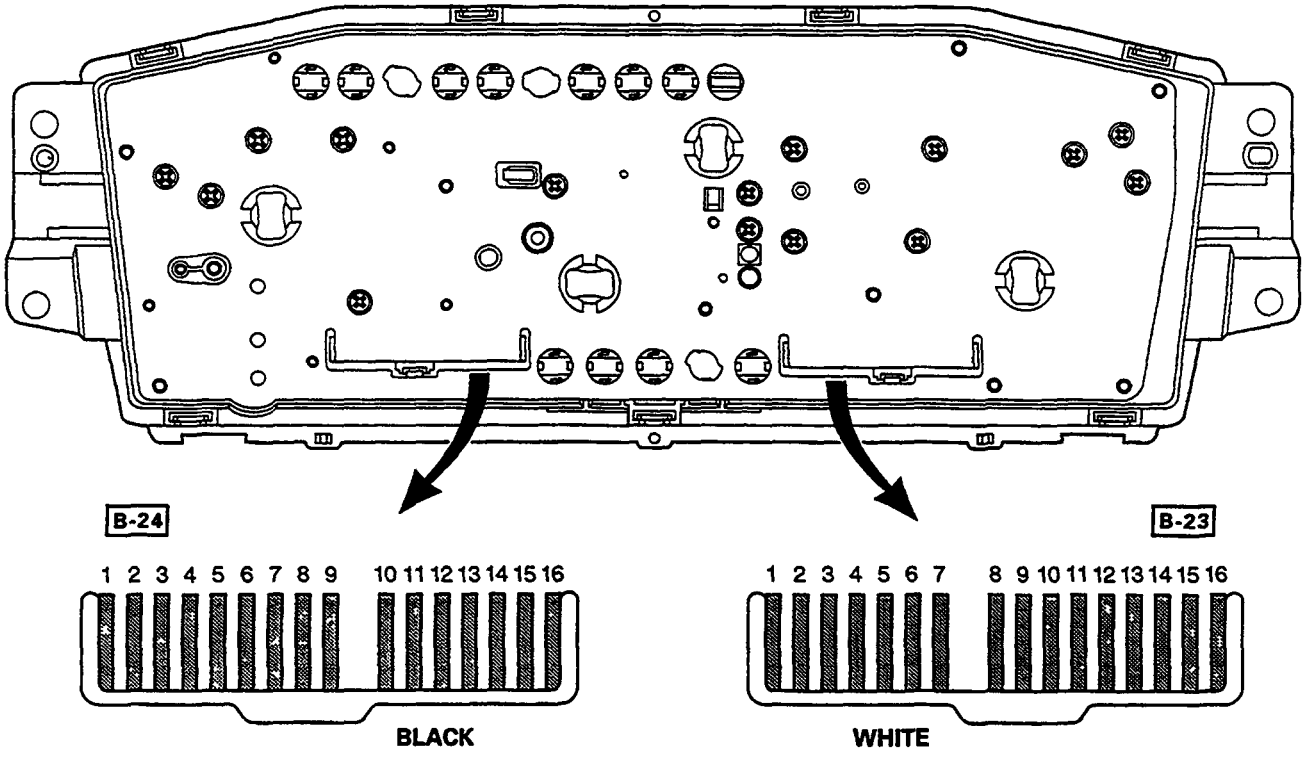

Connector No. / Terminal No.	B-24
1	Ground
2	Ignition
3	Tachometer
4	—
5	—
6	Engine coolant temperature gauge
7	—
8	Glow indicator light
9	Sedimenter warning light
10	Seat belt warning light (Saudi Arabia only) Diff. lock indicator light (South Africa only)
11	—
12	—
13	Illumination light (+)
14	Illumination light (–)
15	4WD indicator light
16	Turn signal indicator light (left)

Connector No. / Terminal No.	B-23
1	Turn signal indicator light (right)
2	—
3	High-beam indicator light (+)
4	High-beam indicator light (–)
5	Ground
6	—
7	—
8	Speedometer
9	Speedometer
10	Oil pressure warning light
11	Fuel gauge
12	Brake warning light
13	Charge warning light
14	Illumination light (+)
15	Illumination light (–)
16	Fuel warning light

SPEEDOMETER AND TACHOMETER

Speedometer On-Vehicle Inspection

Check the speedometer accuracy with a speedometer tester. Carefully follow the tester manufacturer's instructions.

W/O Tachometer

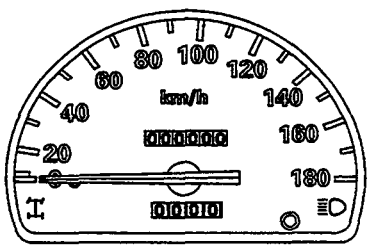

W/Tachometer

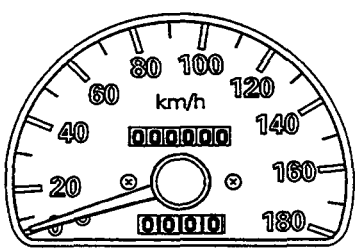

km/h meter (South Africa)

Indication	Permissible Range
20	20-25.6
40	40-45.6
60	60-65.6
80	80-85.6
100	99.5-105.9
120	119.5-125.9
140	139.5-145.9
160	159.1-166.3

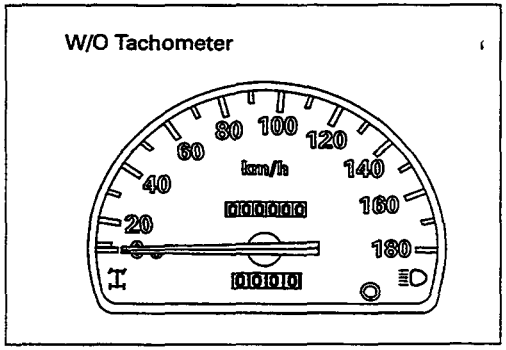

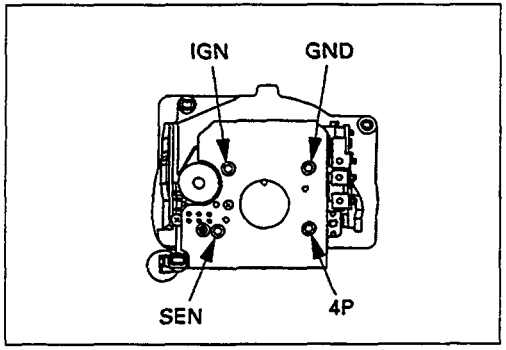

km/h meter (South Africa)

Indication	Permissible Range
20	20-25
40	40-45
60	60-65
80	80-85
100	99.5-105.6
120	119.5-125.6
140	139.5-145.6
160	159.1-166

Speedometer Off-Vehicle Inspection

Remove the speedometer from the metre assembly and measure the resistance and the current consumption between each terminal.

Speedometer Resistance

Terminal symbol \ Tester terminal	Red (+)	Black (-)	Black (-)	Red (+)
IGN - GND	IGN	GND	IGN	GND
	∞		30.6 - 37.4K	
SEN - GND	SEN	GND	SEN	GND
	28.8 - 35.2K		∞	
4P - GND	4P	GND	4P	GND
	13.5 - 16.5K		∞	

Note: Use the analog type circuit tester (ranges: x 1k).

Speedometer Current Consumption

Terminal Symbol	Current consumption	Remarks
IGN - GND (+) (-)	85 ± 15 mA (when 12 ± 1V applied)	No signal input

Note:

1. Use the analog type circuit tester.
2. Since the current consumption fluctuates when the source voltage varies, check to be sure that the voltage applied is 12V ± 1V.

Tachometer On-Vehicle Inspection

1. Attach a tune-up tester to the engine.
2. Start the engine.
3. Compare the tachometer reading and the tester reading.

   If the tachometer indication is outside the permissible range, the tachometer must be replaced.
4. Gradually increase and decrease the engine speed.

   Note the movement of the tachometer needle.

   If the needle movement is sluggish, the tachometer must be replaced.

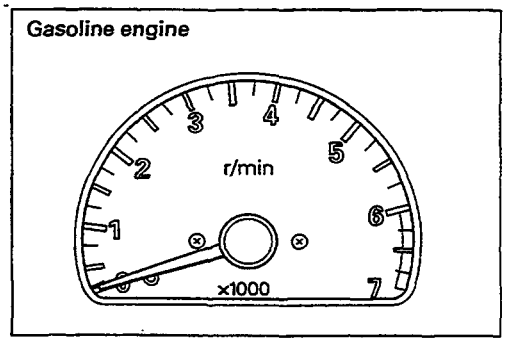

821RV121

Gasoline engine — rpm

Indication	Permissible Range
1,000	940–1060
2,000	1875–2125
3,000	2850–3150
4,000	3820–4180
5,000	4820–5180
6,000	5820–6180

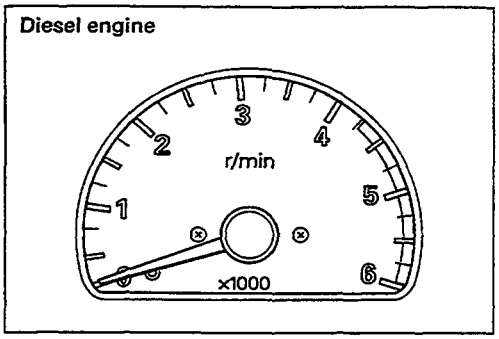

821RV118

Diesel engine — rpm

Indication	Permissible Range
750	690–810
2,000	1875–2125
3,000	2850–3150
4,000	3820–4180
5,000	4820–5180

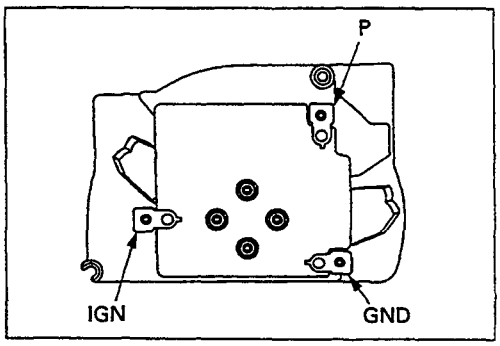

821RV117

Tachometer Off-Vehicle Inspection

Remove the tachometer from the meter assembly and measure the resistance value and the current consumption between each terminal.

Tachometer Resistance

Terminal symbol \ Tester terminal	Red (+)	Black (–)	Black (–)	Red (+)
IGN – GND	IGN	GND	IGN	GND
	∞		23 – 31k	
P – GND	P	GND	P	GND
	∞		24.7 – 33.4k	

Note: *Use the analog type circuit tester (range: x 1k).*

Tachometer Current Consumption

Terminal symbol	Current consumption	Remarks
IGN – GND ⊕ ⊖	90 ± 15 mA (12 ± 1V when voltage applied)	No signal input

Note:
1. Use the analog type circuit tester.
2. Since the current consumption fluctuates as the source voltage varies, check to be sure that the voltage applied is 12V ± 1V.

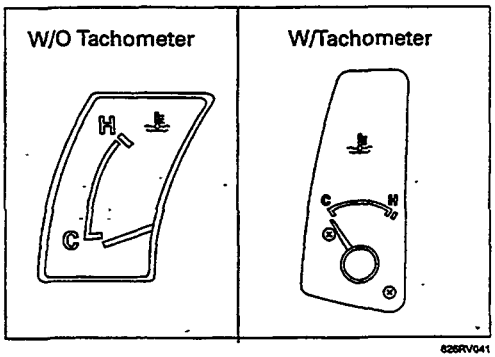

626RV041

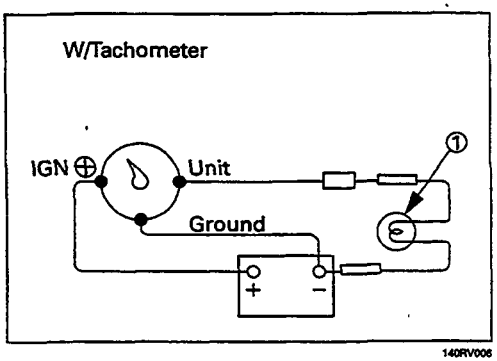

140RV006

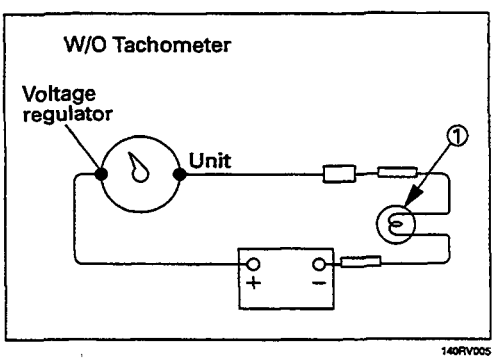

140RV005

TEMPERATURE GAUGE AND THERMO UNIT

Temperature Gauge On-Vehicle Inspection

1. Disconnect the temperature gauge wire connector.
2. Connect a 3.4 Watt test bulb ① to the ground.

   The gauge needle should move the middle part of the gauge

Temperature Gauge Off-Vehicle Inspection

Use a circuit tester to measure the temperature gauge resistance.

Temperature Gauge Resistance Ω

Measuring Point	Standard	
	With Tachometer	Without Tachometer
IGN (+) – Ground	130	–
IGN (+) – UNIT	82	–
UNIT – Ground	212	–
VOLTAGE REGULATOR – UNIT	–	25

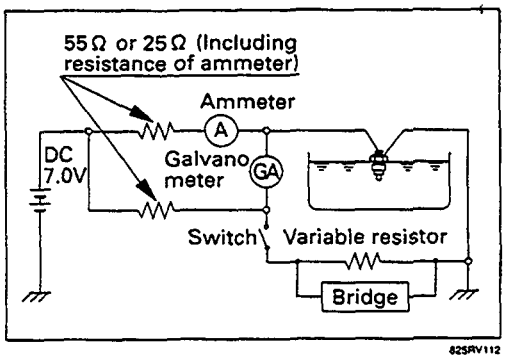

Thermo Unit Inspection

The thermo unit is thermistor type and must be inspected under the conditions as shown in the left chart.

1. Put the deviation of the galvanometer to 0 by using the variable resistor, switch the thermo unit off and then measure the resistance of the resistor through the bridge.

   Confirm that the resistance is continuously variable in any other points than those shown in the following table.

2. Dip the thermo unit into 80 – 90°C (176 – 194°F) water and confirm that there is no bubble continuously coming out of inside of the unit.

   Replace the unit when the result of inspection is found abnormal.

Check condition \ Temperature		50°C (122°F)	115°C (239°F)
7V 55Ω Gauge	Resistance value (Ω)	$226.0^{+33.6}_{-36.6}$	$26.4^{+1.71}_{-2.21}$
7V 25Ω Gauge		—	$24.3^{+2.68}_{-3.68}$

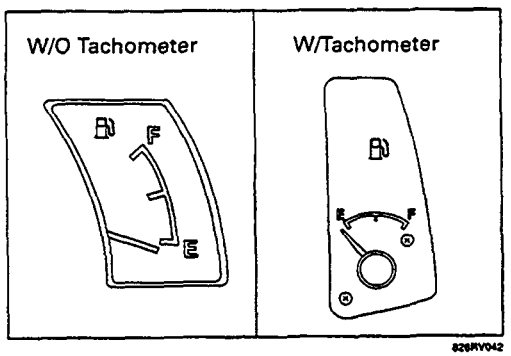

FUEL GAUGE AND TANK UNIT

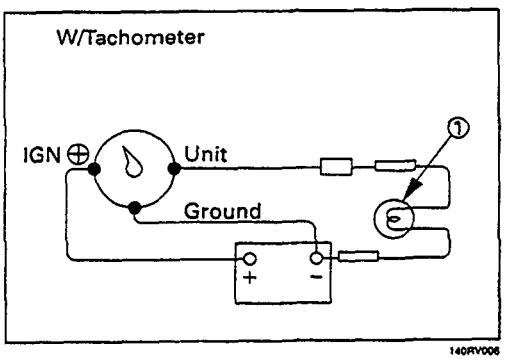

Fuel Gauge On-Vehicle Inspection

1. Disconnect the fuel gauge wire connector.
2. Connect a 3.4 Watt test bulb ① to the ground.

   The gauge needle should more the middle part of the gauge.

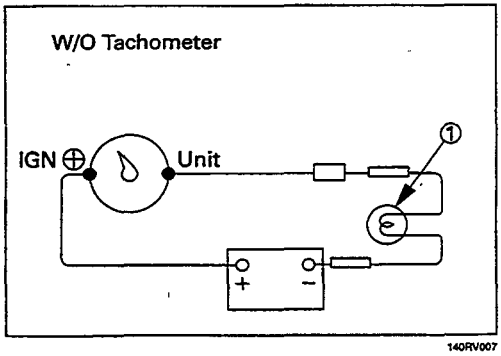

Fuel Gauge Off-Vehicle Inspection

Use a circuit tester to measure the fuel gauge resistance.

Fuel Gauge Resistance Ω

Measuring Point	Standard	
	With Tachometer	Without Tachometer
IGN (+) – Ground	223	110
IGN (+) – 7V		(0)
IGN (+) – UNIT	83	25
Ground – 7V		110
Ground – UNIT	140	135
7V – UNIT		25

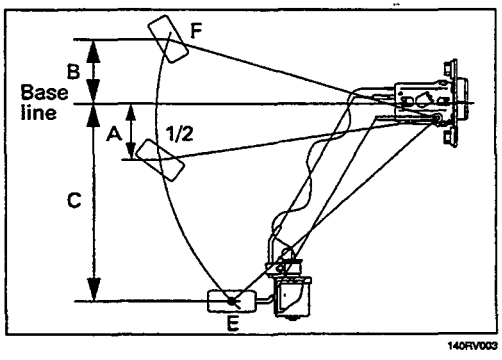

Fuel Tank Unit Inspection

Measure the fuel tank unit resistance between the connector terminals 1 F-1 and 3 F-1 while shifting the float from "E" to "F" point.

Fuel Tank Resistance

Level	Float position mm	Standard resistance Ω
F (B)	51.7	17 ± 2.1
1/2 (A)	49.4	45 ± 4.5
E (C)	166.9	120 ± 6.5

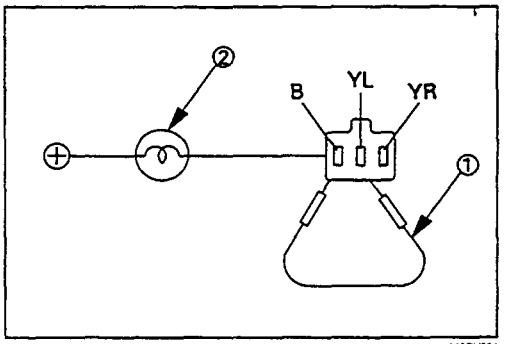

140RV004

Low Fuel Indicator Light Inspection

1. Disconnect the fuel tank unit wire connector.
2. Connect between terminal (YL) and (B).
3. Turn the key switch on. Check that the bulb lights.

If operation is not correct, remove and check the bulb or circuit.

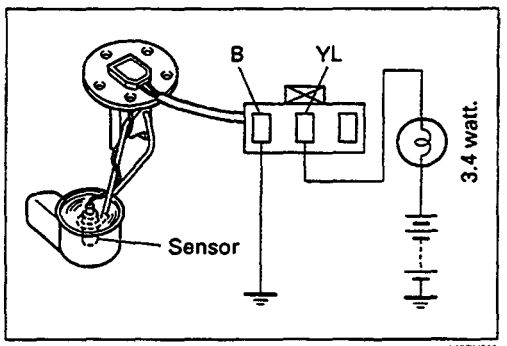

140RV010

Check level sensor operation

1. Remove the fuel tank unit.
2. Apply battery voltage between terminal (YL) and (B) through a 3.4 watt bulb. Check that the bulb lights.

Note:
It will take a short time for the bulb light.

3. Submerge the sensor in fuel. Check that the bulb goes out.

If operation is not correct, replace the fuel tank unit.

BRAKE SYSTEM WARNING LIGHT

The brake system warning light comes on while the parking brake is set and the starter key is ON position.

Note:
The parking brake indicator light circuit is designed to prevent driving of the vehicle with the parking brake on. It does not indicate the condition of the parking brake system.

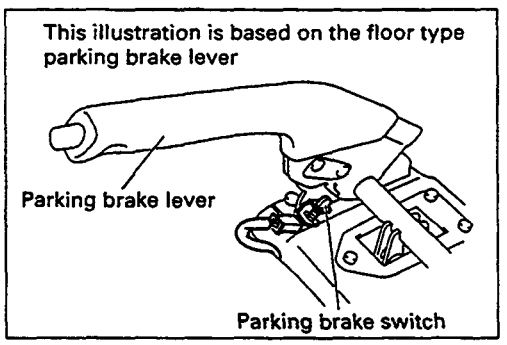

825RV066

The parking brake switch is in parallel with the brake fluid switch.

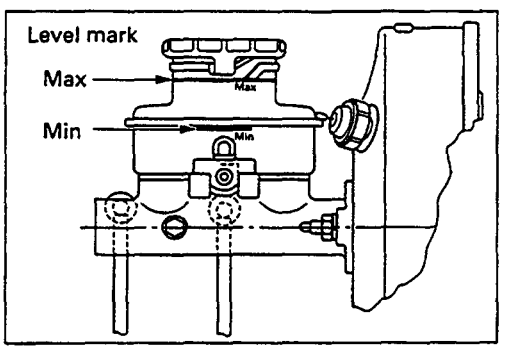

330RV001

The brake system warning light also comes on when reservoir brake fluid level falls below the specified limit with the parking brake released and the starter switch is ON position.

VEHICLE SPEED SENSOR (INCORPORATED IN THE SPEEDOMETER)

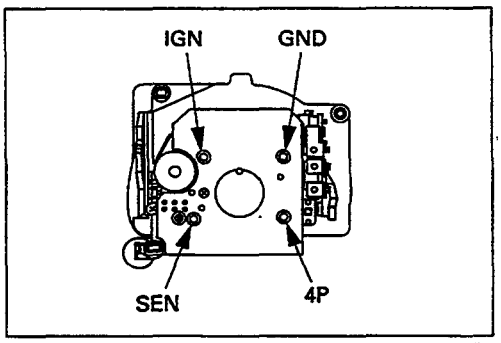

825RV064

Vehicle Speed Sensor Inspection

Remove the speedometer from the meter assembly and measure the resistance value between the terminals.

Speed Sensor Resistance

Terminal symbol \ Tester terminal	Red (+)	Black (–)	Black (–)	Red (+)
4P – GND	4P	GND	4P	GND
	13.5 – 16.5k		∞	

Note: Use the analog type circuit tester.

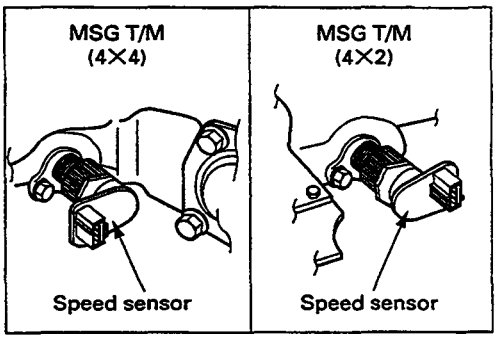

826RV018

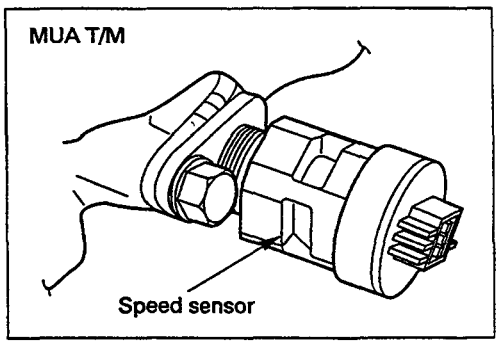

826RV044

VEHICLE SPEED SENSOR (INSTALLED ON THE TRANSMISSION)

The speed sensor is installed on the rear portion of the transmission.

The number of pulses generated is four pulses per one rotation of the pinion shaft.

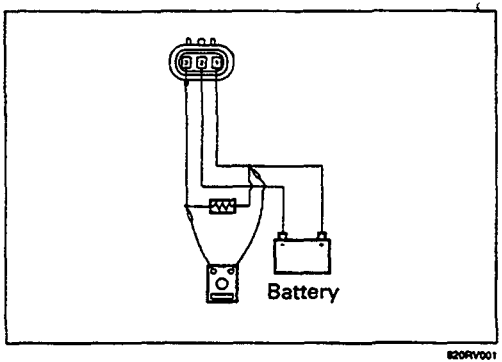

820RV001

Vehicle Speed Sensor Inspection

1. Connect the vehicle speed sensor connector 1 M-10 (Diesel engine: 1 E-44) to the battery (+) terminal and 2 M-10 (Diesel engine: 2 E-44) to the (–) terminal.
2. Connect a resistance of 1.3K ohm to 5K ohm (1/4 W or more) between connectors 1 M-10 (Diesel engine: 1 E-44) and 3 M-10 (Diesel engine: 3 E-44)

CAUTION:
Be extremely careful not to connect the battery (+) terminal to the connector 3 M-10 (Diesel engine: 3 E-44).
This may damage the vehicle speed sensor.

3. Rotate the shaft of the vehicle speed sensor slowly and measure the voltage at the both ends with a digital tester.

The voltage, with one rotation of shaft fluctuates four times in the following range: 10 to 14V — 2V or less.

Timing Belt Indicator Light Reset Procedure (4JA1-T Diesel Engine - RHD)

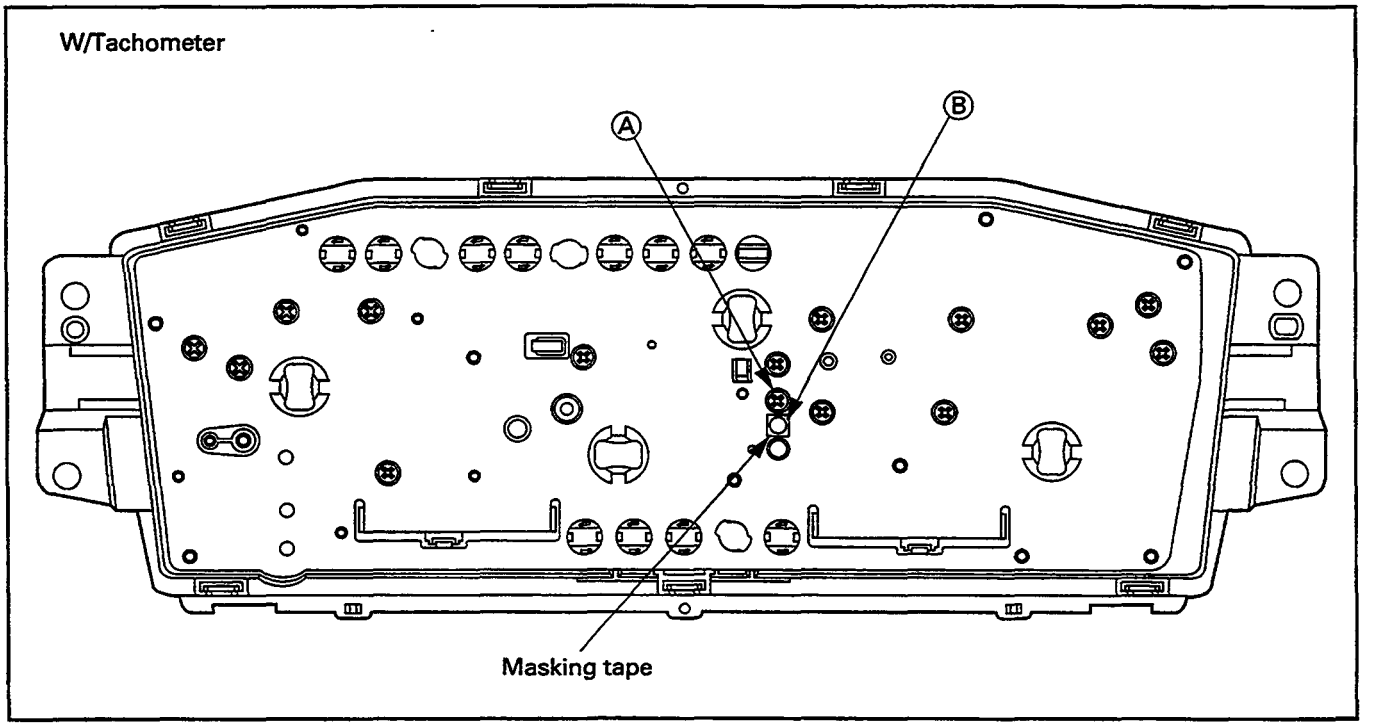

821RV120

Timing belt must be replaced after 100,000 km of vehicle operation.

When the odometer reading reaches 100,000 km, the timing belt indicator light will turn on to remind the driver to change the timing belt.

After replacing the timing belt, the timing belt indicator light must be reset to remind the driver to replace the timing belt after the next 100,000 km.

Timing Belt Indicator Light Reset Procedure

1. Remove the masking tape from the hole Ⓑ.
2. Remove the screw from the hole Ⓐ and install it to the hole Ⓑ.
3. Apply new masking tape to the hole Ⓐ.

Note:

The above procedure assumes that the timing belt is being replaced for the first time (after 100,000 km).

For subsequent reset procedure (at next 100,000 km), hole positions will be the opposite of the above procedure.

HEATER AND AIR CONDITIONING

PART LOCATION

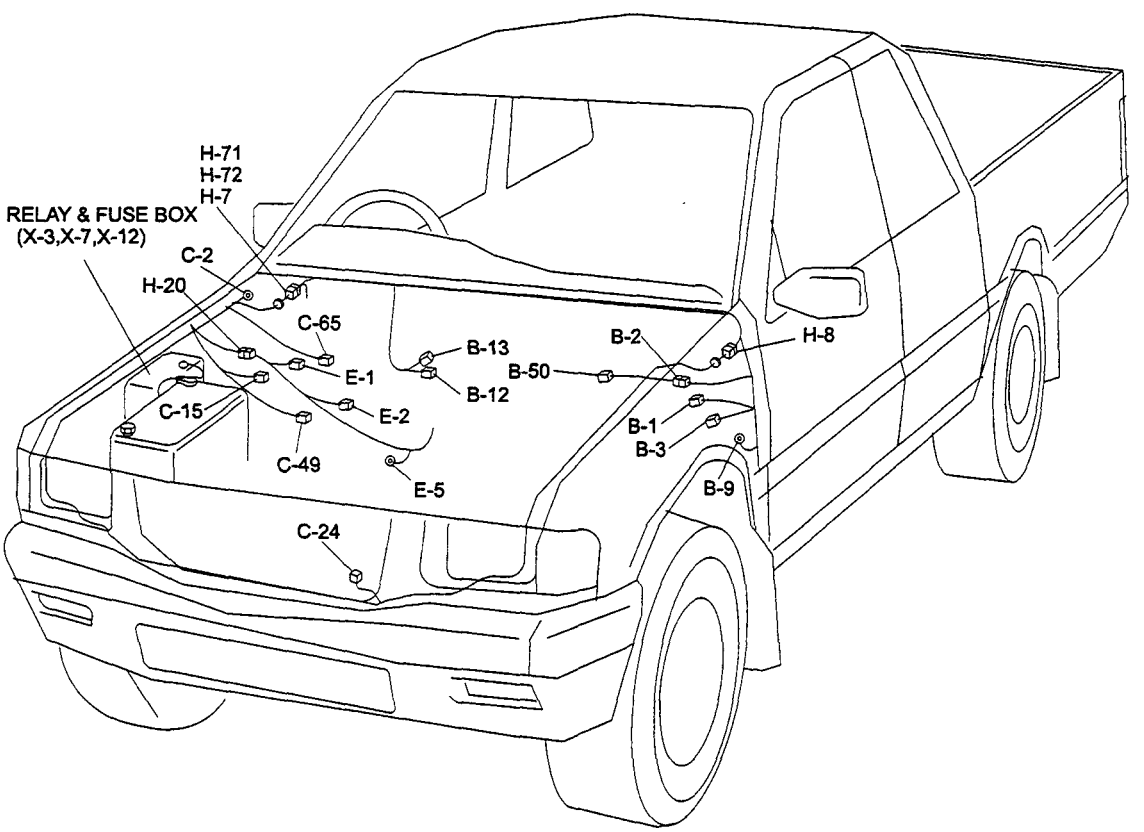

CIRCUIT DIAGRAM (PETROL ENGINE)

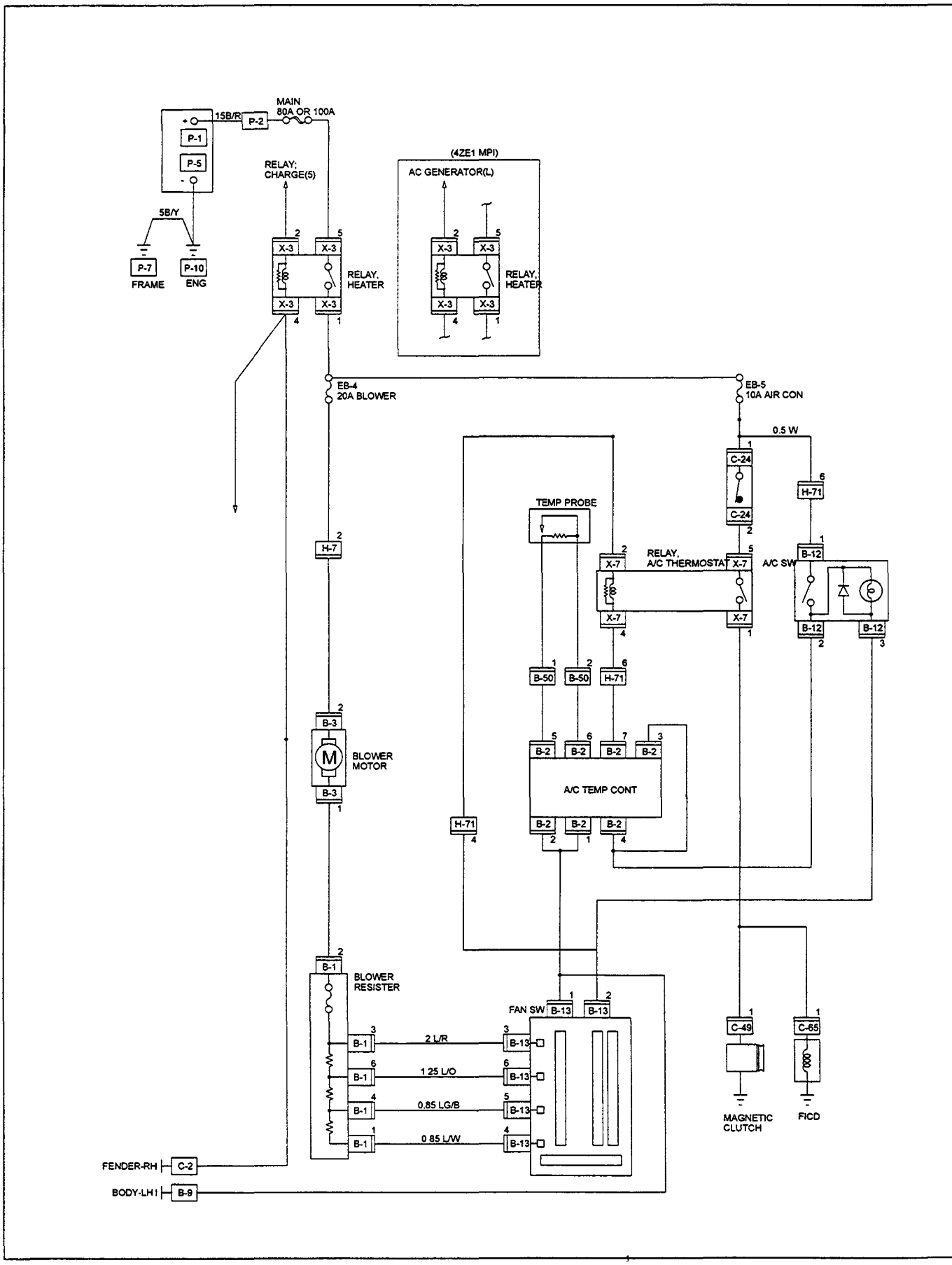

CIRCUIT DIAGRAM (DIESEL ENGINE)

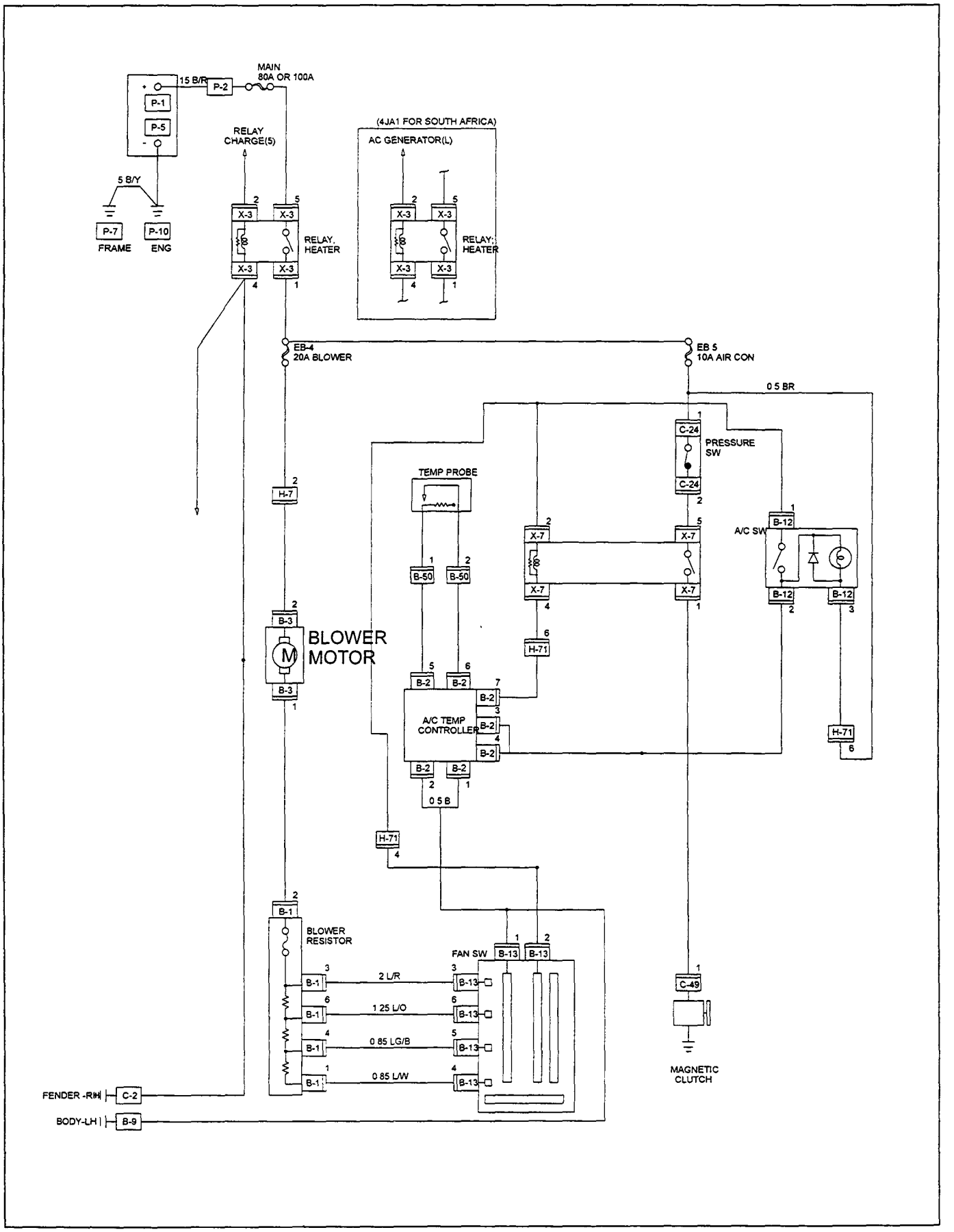

POWER DOOR LOCK

PARTS LOCATION

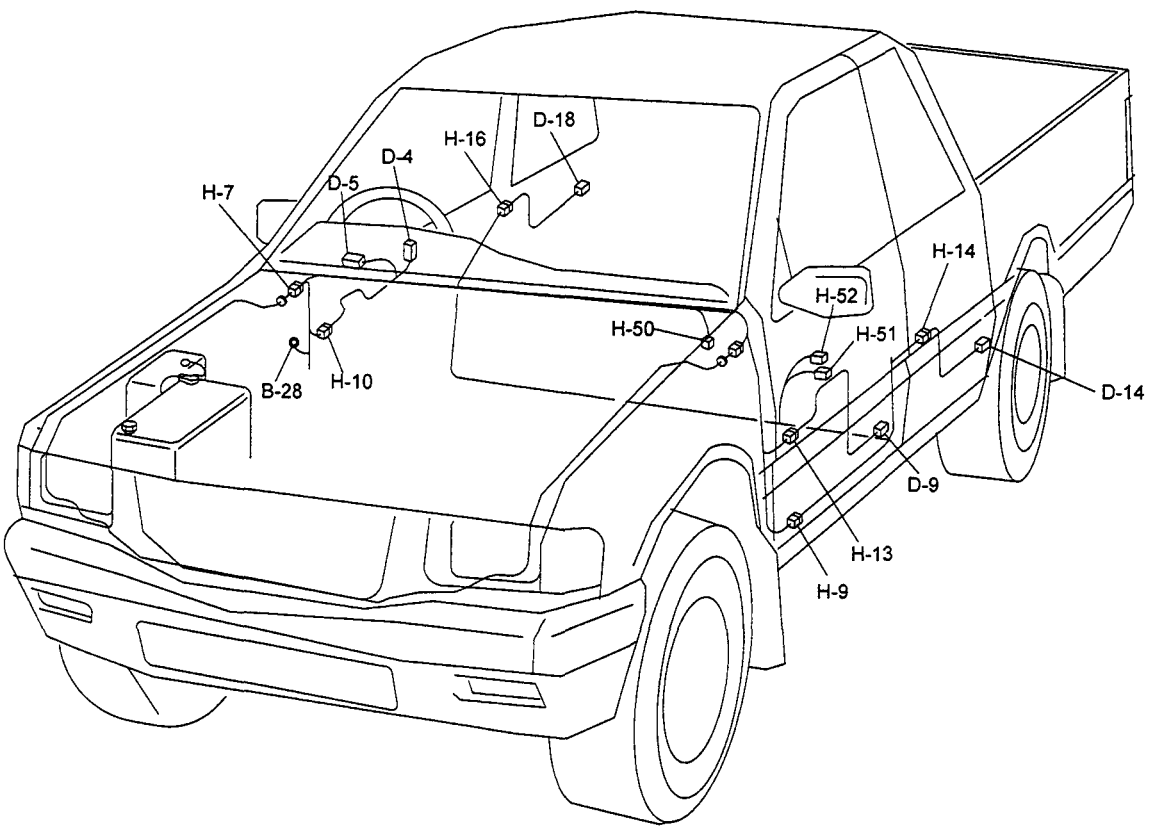

CIRCUIT DIAGRAM

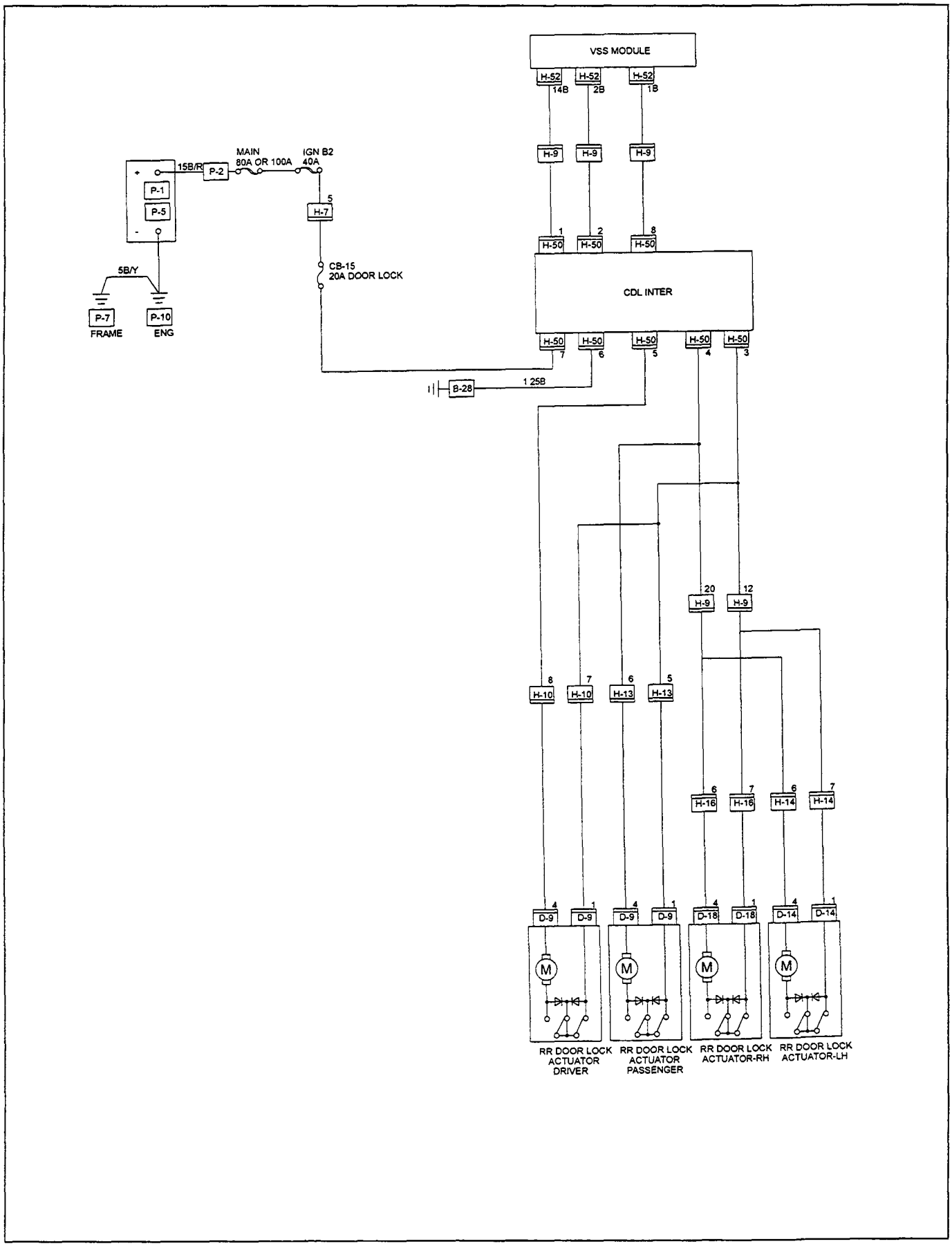

TROUBLE SHOOTING

QUICK CHART FOR CHECK POINTS

Check Points / Trouble Mode	Fuse CB-15 (20A)	Power Window & Door Lock Switch	Door Lock Switch	Door Lock Actuator			Cable Harness
		Driver's side	Driver's side	Passenger's side	RR-RH	RR-LH	
1. All the doors do not lock and unlock	○	○					○
2. All the doors do not get locked (or unlocked)		○					○
3. Driver's side door does not get locked (or unlocked)			○				○
4. FRT passenger's side door does not get locked (or unlocked)				○			○
5. RR door-RH does not get locked (or unlocked)					○		○
6. RR door-LH does not get locked (or unlocked)						○	○
7. Door lock does not operate when operating from the driver's seat side			○				○

1. All the doors do not lock and unlock

Checkpoint		Trouble Cause	Countermeasure
Fuse No. CB-15 (20A, Fuse box)	NG	Poor fuse contact or blown	Reinstall or replace the fuse No. CB-15 (20A)
OK			
Grounding point (B-28)	NG	Poor grounding point contact	Repair grounding point (B-28) contact
OK			
Voltage between the driver's side power window & door lock SW harness side connector terminal 9 D-5 and the ground (Should be battery voltage present)	NG	Open circuit or poor connector contact	Repair open circuit or connector contact
OK			
Continuity between 5 D-5 and B-28	NG	Open circuit or poor connector contact	Repair open circuit or connector contact
OK			
Driver's side power window & door lock SW. function	NG	SW. malfunction	Replace the driver's side power window & door lock SW.

2. All the doors do not get locked (or unlocked)

Continuity between the driver's side power window & door lock SW harness side connector terminals 6 D-5 and 8 D-5	NG	Open circuit or poor connector contact	Repair open circuit or connector contact
OK			
Driver's side power window & door lock SW. function	NG	SW. malfunction	Replace the driver's side power window & door lock SW.

3. Driver's side door does not get locked (or unlocked)

Checkpoint		Trouble Cause	Countermeasure
Door lock SW. function	NG	SW. malfunction	Replace the door lock SW.

4. FRT passenger's side door does not get locked (or unlocked)

FRT passenger's side door lock actuator function	NG	Actuator malfunction	Replace the FRT passenger's side door lock actuator

5. RR door-RH does not get locked (or unlocked)

RR door lock actuator-RH function	NG	Actuator malfunction	Replace the RR door lock actuator-RH

6. RR door-LH does not get locked (or unlocked)

RR door lock actuator-LH function	NG	Actuator malfunction	Replace the RR door lock actuator-LH

7. Door lock does not operate when operated from the driver's seat side

Grounding point (B-28)	NG	Poor grounding point contact	Repair grounding point (B-28) contact
OK			
Continuity between the door lock SW. side connector terminals 1 D-4 and 2 D-4 when the SW is locked and between 3 D-4 and 2 D-4 when the SW. is unlocked	NG	SW. malfunction	Replace the door lock SW.

REMOVAL AND INSTALLATION

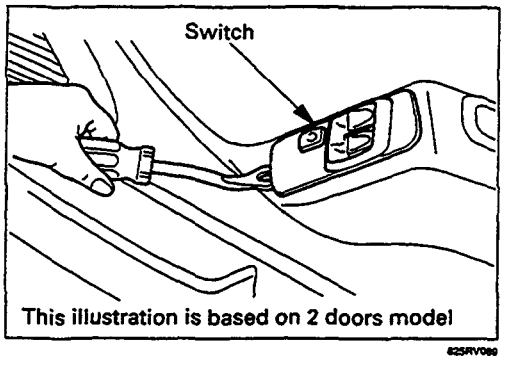

DRIVER SEAT SIDE POWER WINDOW & DOOR LOCK SWITCH

Removal

1. Remove the switch by pushing the spring with the tip of a screwdriver.
2. Disconnect the connector.

Installation

To install, follow the removal steps in the reverse order.

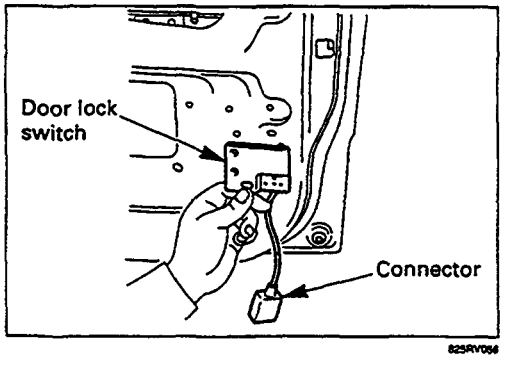

DRIVER'S SIDE DOOR LOCK SWITCH

Removal

1. **Door Lock ASM**
   - Refer to the removal steps of the DOORS in Section 10 "BODY".
2. **Door Lock Switch**

Installation

To install, follow the removal steps in the reverse order.

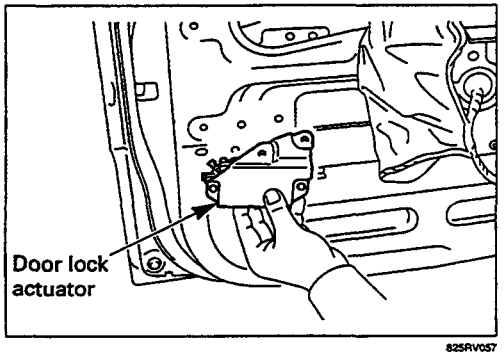

FRT PASSENGER'S SIDE DOOR LOCK ACTUATOR

Removal

1. **Door Lock ASM**
   - Refer to the removal steps of the DOORS in Section 10 "BODY".
2. **Door Lock Actuator**
   - Remove the actuator fixing bolts.
   - Disconnect the door lock link rod.
   - Disconnect the actuator connector.

Installation

To install, follow the removal steps in the reverse order.

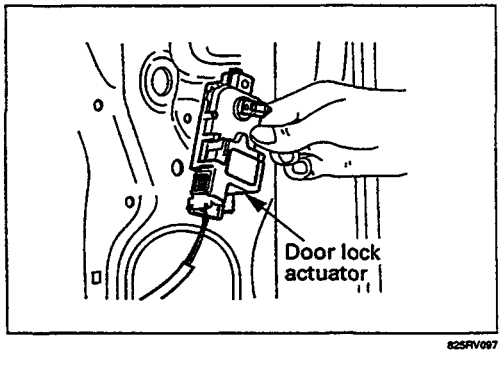

RR DOOR LOCK ACTUATOR-LH & RH

Removal

1. **Door Lock ASM**
   - Refer to the removal steps of the DOORS in Section 10 "BODY".
2. **Door Lock Actuator**
   - Remove the actuator fixing bolts.
   - Disconnect the door lock link rod.
   - Disconnect the actuator connector.

Installation

To install, follow the removal steps in the reverse order.

INSPECTION AND REPAIR

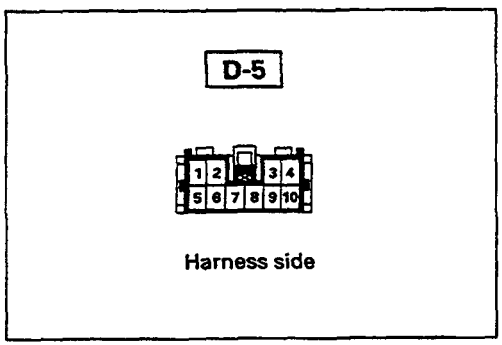

Driver Seat Side Power Window & Door Lock Switch

1. **Harness Side Connector Circuit**

   Check voltage and continuity between the switch harness side connector terminals as shown in the following table.

Terminal No.	Wire color	Connecting to	Check item	Connecting terminal	Check condition		Standard
3	R/W	Door lock SW (Lock)	Continuity (Resistance)	3-Ground	Driver seat side door	Lock	Continuity
						Unlock	No continuity
4	LG/R	Door lock SW (Unlock)		4-Ground	Driver seat side door	Lock	No continuity
						Unlock	Continuity
5	B	Ground		5-Ground	—		Continuity
6	L/Y	Door lock actuator (Lock)		6 – 8	—		Continuity (There is some resistance)
8	Y/G	Door lock actuator (Unlock)		8 – 6	—		Continuity (There is some resistance)
9	LG/W	Fuse CB-15 (20A)	Voltage	9- Ground	—		Battery voltage (Approx. 12V)

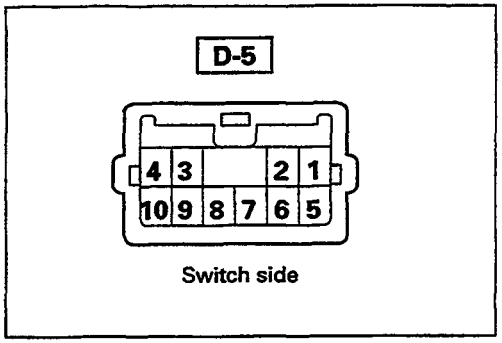

632RV002

2. Switch Side Connector Circuit

Remove the switch connector, and check continuity and voltage between the switch connector terminals.

(Connect the (+) terminal of the battery to 9 D-5 and the (–) terminal to 5 D-5 .)

5 D-5 - 6 D-5 .... Continuity
5 D-5 - 8 D-5 .... Continuity
(Then, ground 3 D-5 .)
6 D-5 .... Current flow for approx. 1 second
(Disconnect the ground of 3 D-5 , and ground 4 D-5 .)
8 D-5 .... Current flow for approx. 1 second

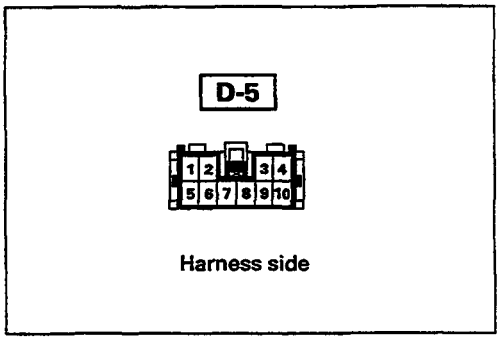

060RS009

3. Door Lock Operation Test

After confirming that there is continuity between the switch harness side connector terminals 6 D-5 and 8 D-5 , apply the battery voltage to each of the terminals to conduct the operation test.

When the door lock will not operate, check the door lock actuator for any trouble.

Connecting terminals		Operation
8 (Y/G)	6 (L/Y)	
⊕	⊖	Unlock
⊖	⊕	Lock

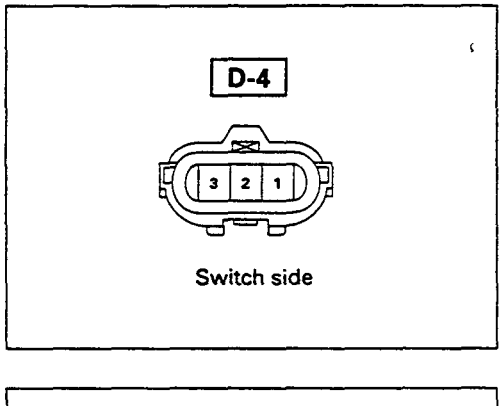

Driver's Side Door Lock Switch

1. **Switch Side Connector Circuit**

   Check continuity between the switch connector terminals

SW position \ Terminal No.	1	2	3
Lock	○———	———○	
Unlock		○———	———○

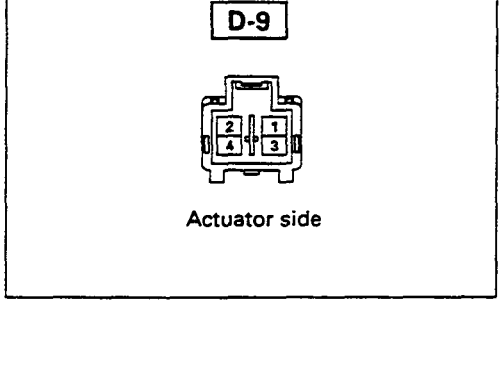

Front Passenger's Side Door Lock Actuator

1. **Actuator Side Connector Circuit**

   Apply the battery voltage to the actuator connector terminals to check the operation.

   When the door lock actuator is checked on the vehicle and there is no continuity, and when the door lock actuator itself is checked and no trouble is found, check the circuit between the door lock actuator and the driver seat side power window & door lock switch for any failure.

Connecting terminals		Operation
2	4	
⊕	⊖	Lock
⊖	⊕	Unlock

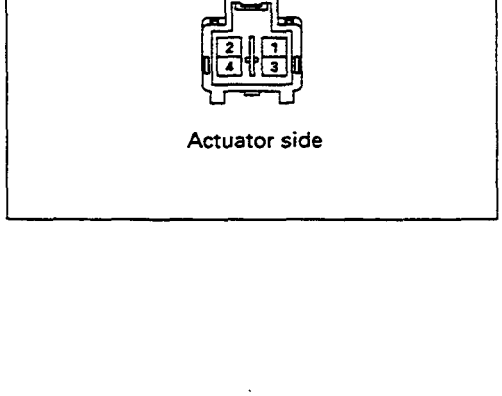

Rear Door Lock Actuator -LH & RH

1. **Actuator Side Connector Circuit**

   Apply the battery voltage to the actuator connector terminals to check the operation.

   When the door lock actuator is checked on the vehicle and there is no continuity, and when the door lock actuator itself is checked and no trouble is found, check the circuit between the door lock actuator and the driver seat side power window & door lock switch for any failure.

Connecting terminals		Operation
1	3	
⊖	⊕	Lock
⊕	⊖	Unlock

POWER WINDOW

PARTS LOCATION

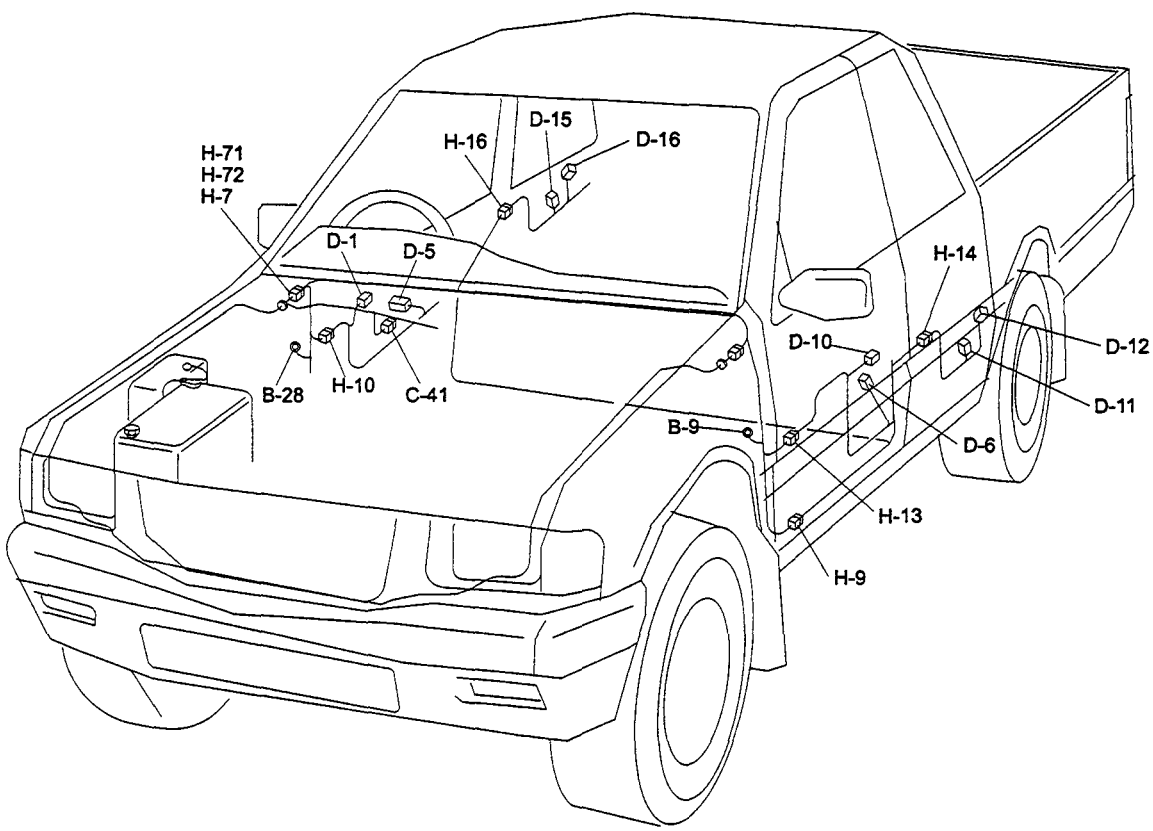

CIRCUIT DIAGRAM (RHD)

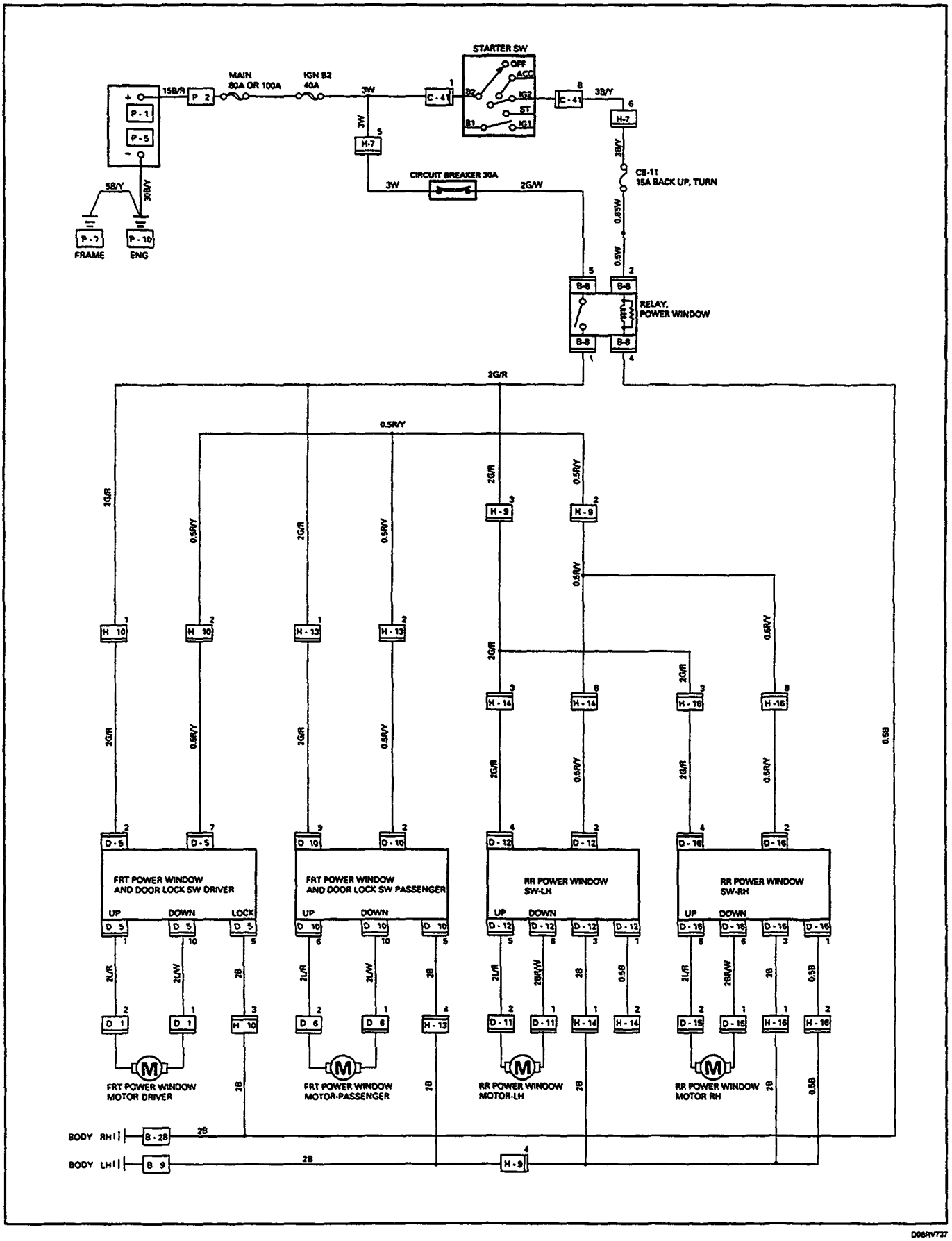

D08RV737

TROUBLE SHOOTING

QUICK CHART FOR CHECK POINTS

Trouble Mode	Check Points											
	Fuse CB-11 (15A)	Circuit Breaker (30A)	Relay; Power Window	Power Window & Door Lock Switch		Power Window Switch		Power Window Motor				Cable Harness
				Driver's Side	Passenger's Side	RR-LH	RR-RH	Driver's Side	Passenger's Side	RR-LH	RR-RH	
All windows will not operate	○	○	○	○								○
Lock SW does not function				○								
Driver's Window:												
Window does not operate	○	○	○	○				○				○
One-touch operation for "DOWN" movement will not operate				○								
Window operates in only one direction				○								
Front window on passenger seat side:												
Window does not operate				○	○				○			○
Window does not operate when operating the driver's SW				○								
Window does not operate when operating the passenger's SW				○	○							○
Window does operate in only one direction when operating the driver's SW				○	○							
Window does operate in only one direction when operating the passenger's seat side SW					○							
Rear window on left (or right) side:												
Window on left (or right) side does not operate				○		○	○			○	○	○
Window does not operate when operating the driver's SW				○								
Window does operate in only one direction when operating the driver's SW				○								
Window does operate in only one direction when operating the RR-LH (or RH) side SW						○	○					○

1. All windows do not operate

Checkpoint		Trouble Cause	Countermeasure
Fuse CB-11 (15A, Fuse box)	NG	Poor fuse contact or blown	Reinstall or replace the fuse No. CB-11(15A)
OK			
Circuit breaker (30A, Fuse box) function	NG	Circuit breaker malfunction	Replace the circuit breaker (30A)
OK			
Grounding points (B-9 and B-28)	NG	Poor grounding point contact	Repair grounding points (B-9 and B-28) contact
OK			
Power window relay function	NG	Power window relay malfunction	Replace the power window relay
OK			
Voltage between the power window relay harness side connector terminal 5 B-8 and the ground (Should be battery voltage present)	NG	Open circuit or poor connector contact	Repair an open circuit or a poor connection of the connectors between 3 H-7 (RHD: 5 H-7) and 5 B-8
OK			
Voltage between 2 D-5 and the ground (Should be battery voltage present)	NG	Open circuit or poor connector contact	Repair an open circuit or a poor connection of the connectors between 1 B-8 and 2 D-5
OK			
Voltage between B-28 and the ground	NG	Open circuit or poor connector contact	Repair an open circuit or a poor connection of the connectors between 5 D-5 and B-28 , or 4 B-8 and B-28

Continued on the next page

Checkpoint		Trouble Cause	Countermeasure
Continued from the previous page			
OK			
Driver seat side power window & door lock SW. function	NG	SW. malfunction	Replace the driver seat side power window & door lock SW.

Lock switch does not function

Driver seat side power window & door lock SW. function	NG	SW. malfunction	Replace the driver seat side power window & door lock SW.

Window on the driver's side does not operate

Driver seat side power window & door lock SW. function	NG	SW. malfunction	Replace the driver seat side power window & door lock SW.
OK			
1. Driver seat side power window motor function when connecting the motor connector 2 D-1 to the battery (+) terminal, and 1 D-1 to the (–) terminal (Should the motor rotate in the "UP" direction of the window) 2. Driver seat side power window motor function when connecting the motor connector 1 D-1 to the battery (+) terminal, and 2 D-1 to the (–) terminal (Should the motor rotate in the "DOWN" direction of the window)	NG	Motor malfunction	Replace the driver seat side power window motor
OK			
Continuity between 1 D-5 and 2 D-1, or 10 D-5 and 1 D-1	NG	Open circuit or poor connector contact	Repair open circuit or connector contact

4. Window on the front passenger's side does not operate

Checkpoint		Trouble Cause	Countermeasure
Front passenger's power window & door lock SW. function	NG	SW. malfunction	Replace the front passenger's power window & door lock SW.
OK			
Driver seat side power window & door lock SW. function	NG	SW. malfunction	Replace the driver seat side power window & door lock SW.
OK			
1. Front passenger's power window motor function when connecting the motor connector 2 D-6 to the battery (+) terminal, and 1 D-6 to the (–) terminal (Should the motor rotate in the "UP" direction of the window) 2. Front passenger's power window motor function when connecting the motor connector 1 D-6 to the battery (+) terminal, and 2 D-6 to the (–) terminal. (Should the motor rotate in the "DOWN" direction of the window)	NG	Motor malfunction	Replace the front passenger's power window motor
OK			
Continuity between 6 D-10 and 2 D-6, or 10 D-10 and 1 D-6	NG	Open circuit or poor connector contact	Repair open circuit or connector contact

5. Rear window on the left (right) side does not operate

Checkpoint		Trouble Cause	Countermeasure
Rear power window SW.-LH (RH) function	NG	SW. malfunction	Replace the rear power window SW.-LH (RH)
OK			
Driver seat side power window & door lock SW. function	NG	SW. malfunction	Replace the driver seat side power window & door lock SW.
OK			
1. Rear power window motor-LH (RH) function when connecting the motor connector 2 D-11 (2 D-15) to the battery (+) terminal, and 1 D-11 (1 D-15) to the (–) terminal (Should the motor rotate in the "UP" direction of the window) 2. Rear power window motor-LH (RH) function when connecting the motor connector 1 D-11 (1 D-15) to the battery (+) terminal, and 2 D-11 (2 D-15) to the (–) terminal (Should the motor rotate in the "DOWN" direction of the window)	NG	Motor malfunction	Replace the rear power window motor
OK			
Continuity between 5 D-12 and 2 D-11 (5 D-16 and 2 D-15), or 6 D-12 and 1 D-11 (6 D-16 and 1 D-15)	NG	Open circuit or poor connector contact	Repair open circuit or connector contact

REMOVAL AND INSTALLATION

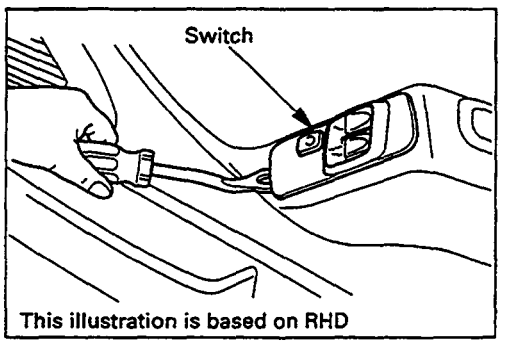

DRIVER SEAT SIDE POWER WINDOW & DOOR LOCK SWITCH (2 DOORS MODEL)

Removal

1. Remove the switch by pushing the spring with the tip of a screwdriver.
2. Disconnect the connector.

Installation

To install, follow the removal steps in the reverse order.

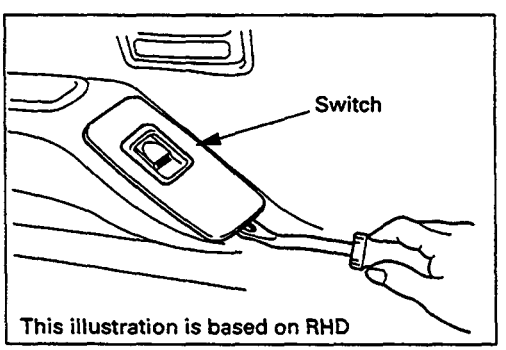

FRONT PASSENGER'S POWER WINDOW & DOOR LOCK SWITCH (2 DOORS MODEL)

Removal

1. Remove the switch by pushing the spring with the tip of a screwdriver.
2. Disconnect the connector.

Installation

To install, follow the removal steps in the reverse order.

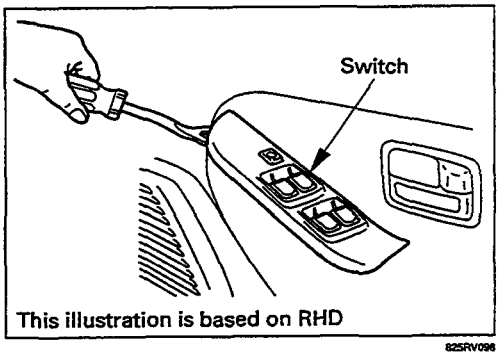

825RV096

DRIVER SEAT SIDE POWER WINDOW & DOOR LOCK SWITCH (4 DOORS MODEL)

Removal

1. Remove the switch by pushing the spring with the tip of a screwdriver.
2. Disconnect the connector.

Installation

To install, follow the removal steps in the reverse order.

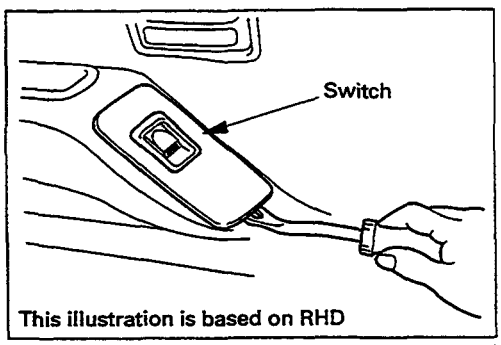

825RV086

FRONT PASSENGER'S POWER WINDOW & DOOR LOCK SWITCH (4 DOORS MODEL)

Removal

1. Remove the switch by pushing the spring with the tip of a screwdriver.
2. Disconnect the connector.

Installation

To install, follow the removal steps in the reverse order.

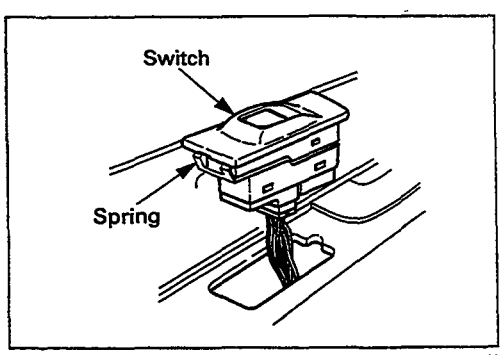

825RV096

REAR POWER WINDOW & DOOR LOCK SWITCH-LH & RH

Removal

1. Remove the switch by pushing the spring with the tip of a screwdriver.
2. Disconnect the connector.

Installation

To install, follow the removal steps in the reverse order.

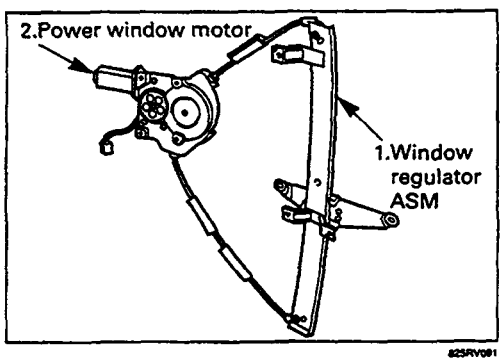

DRIVER SEAT SIDE POWER WINDOW MOTOR

Removal

1. **Window Regulator ASM**
   - Refer to the removal steps of the WINDOW REGULATOR/POWER WINDOW MOTOR in Section 10 "BODY".
2. **Power Window Motor**
   - Loosen the fixing bolts to remove the power window motor from the regulator.

Installation

To install, follow the removal steps in the reverse order.

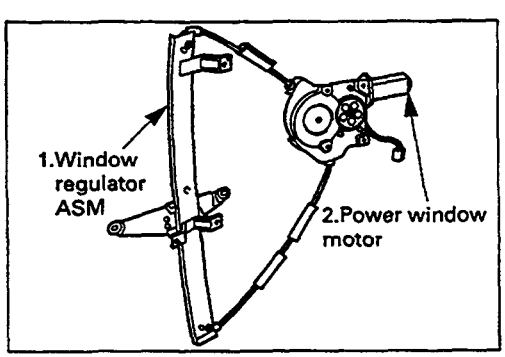

FRONT PASSENGER'S POWER WINDOW MOTOR

Removal

1. **Window Regulator ASM**
   - Refer to the removal steps of the WINDOW REGULATOR/POWER WINDOW MOTOR in Section 10 "BODY".
2. **Power Window Motor**
   - Loosen the fixing bolts to remove the power window motor from the regulator.

Installation

To install, follow the removal steps in the reverse order.

REAR POWER WINDOW MOTOR-LH & RH

Removal and Installation

Refer to the "DRIVER SEAT SIDE POWER WINDOW MOTOR" removal and installation steps in this section.

INSPECTION AND REPAIR

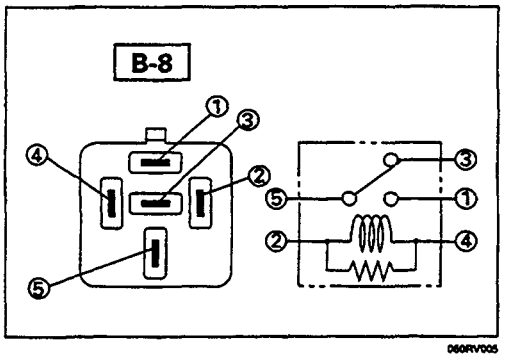

Power Window Relay

Check continuity between the relay terminals.

① - ⑤	No continuity
(When battery voltage is applied between ② and ④)	
① - ⑤	Continuity

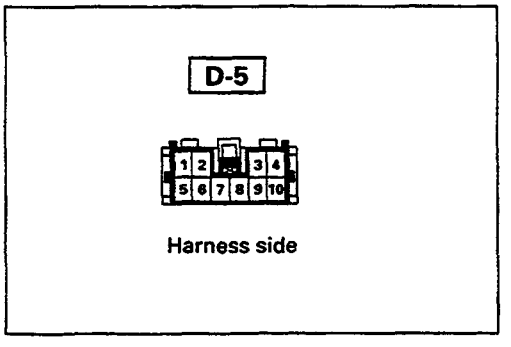

Driver Seat Side Power Window & Door Lock Switch

1. **Harness Side Connector Circuit**

   Disconnect the switch connector, and check voltage and continuity between the harness side connector terminals as shown in the following table.

Terminal No.	Wire color	Connecting to	Check item	Connecting terminal	Check condition	Standard
2	G/R	Power window relay	Voltage	2-Ground	Starter SW "ON"	Approx. 12V
1	L/R	Power window motor	Continuity	1 – 10	—	Continuity
10	L/W					
5	B	Ground	Continuity	5-Ground	—	Continuity

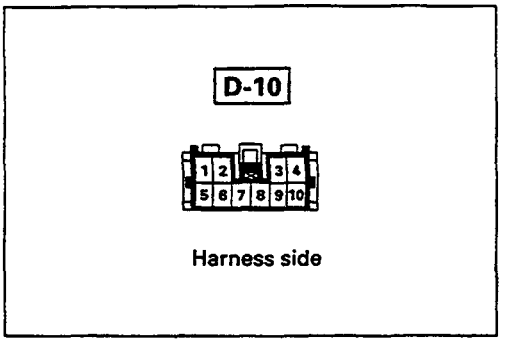

Front Passenger's Power Window & Door Lock Switch

1. **Harness Side Connector Circuit**

   Disconnect the switch connector, and check voltage and continuity between the harness side connector terminals as shown in the following table.

Terminal No.	Wire color	Connecting to	Check item	Connecting terminal	Check condition	Standard
9	G/R	Power window relay	Voltage	9-Ground	Starter SW "ON"	Approx. 12V
6	L/R	Power window motor	Continuity	6 – 10	—	Continuity
10	L/W					
5	B	Ground	Continuity	5-Ground	—	Continuity

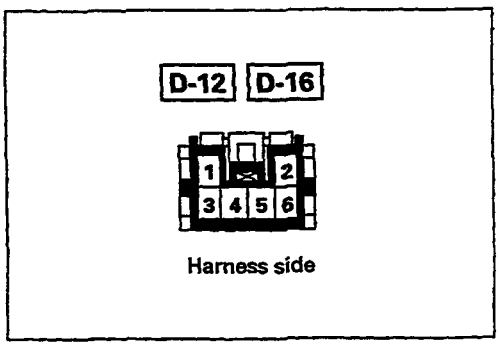

Rear Power Window Switch-LH & RH

1. **Harness Side Connector Circuit**

   Disconnect the switch connector, and check voltage and continuity between the harness side connector terminals as shown in the following tables.

D-12 (RR-LH)						
Terminal No.	Wire color	Connecting to	Check item	Connecting terminal	Check condition	Standard
4	G/R	Power window relay	Voltage	4-Ground	Starter SW "ON"	Approx. 12V
5	L/R	Power window motor	Continuity	5 – 6	—	Continuity
6	BR/W					
3	B	Ground	Continuity	3-Ground	—	Continuity

D-16 (RR-RH)						
Terminal No.	Wire color	Connecting to	Check item	Connecting terminal	Check condition	Standard
4	G/R	Power window relay	Voltage	4-Ground	Starter SW "ON"	Approx. 12V
5	L/R	Power window motor	Continuity	5 – 6	—	Continuity
6	BR/W					
3	B	Ground	Continuity	3 – 1	—	Continuity
1	B					

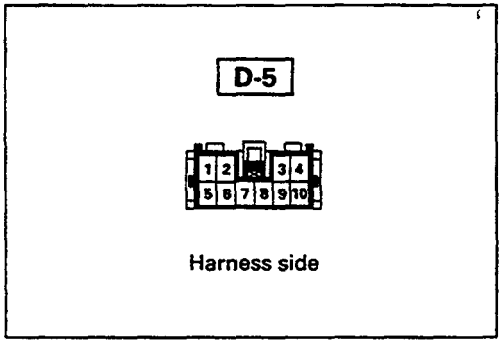

Driver Seat Side Power Window Motor

1. **Driver Seat Side Power Window & Door Lock Switch Connector Circuit**

   Disconnect the switch connector, apply the battery voltage (12V) to the harness side connector terminals and check operation.

Connecting terminals		Operation direction
1 (L/R)	10 (L/W)	
⊖	⊕	DOWN
⊕	⊖	UP

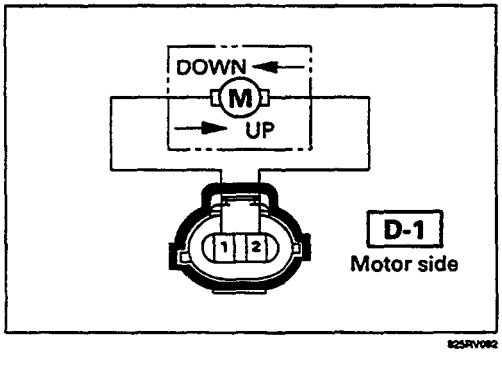

2. **Driver Seat Side Power Window Motor Connector Circuit**

   Disconnect the switch connector, apply the battery voltage (12V) to the motor side connector terminals and check operation.

Connecting terminals		Operation direction
1	2	
⊕	⊖	DOWN
⊖	⊕	UP

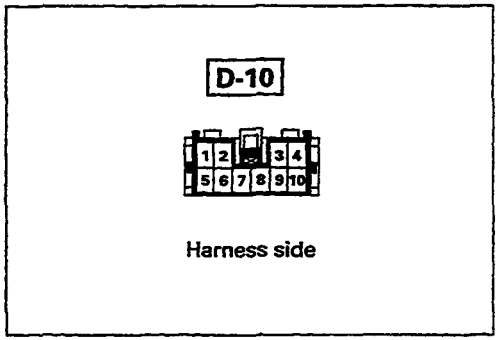

Front Passenger's Power Window Motor

1. **Front Passenger's Power Window Switch & Door Lock Switch Connector Circuit**

   Disconnect the motor connector, apply the battery voltage (12V) to the harness side connector terminals and check operation.

Connecting terminals		Operation direction
6 (L/R)	10 (L/W)	
⊖	⊕	DOWN
⊕	⊖	UP

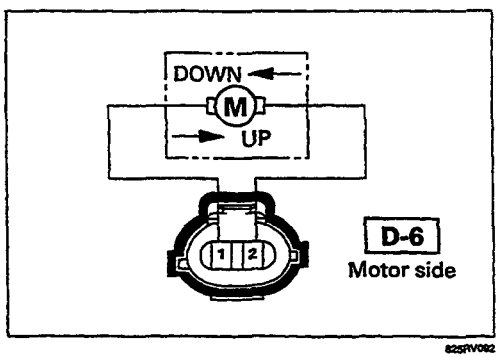

2. **Front Passenger's Power Window Motor Connector Circuit**

   Disconnect the switch connector, apply the battery voltage (12V) to the motor side connector terminals and check operation.

Connecting terminals		Operation direction
1	2	
⊕	⊖	DOWN
⊖	⊕	UP

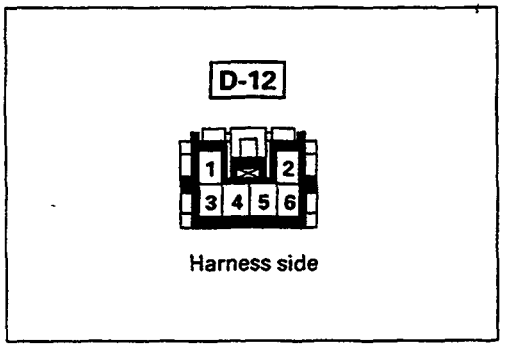

Rear Passenger's Power Window Motor-LH

1. **Rear Power Window Switch-LH Connector Circuit**

   Disconnect the motor connector, apply the battery voltage (12V) to the harness side connector terminals and check operation.

Connecting terminals		Operation direction
5 (L/R)	6 (BR/W)	
⊖	⊕	DOWN
⊕	⊖	UP

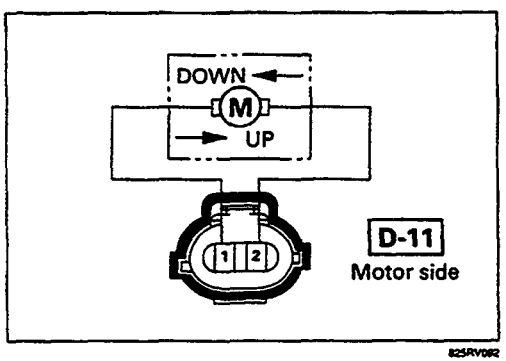

2. **Rear Power Window Motor-LH Connector Circuit**

   Disconnect the switch connector, apply the battery voltage (12V) to the motor side connector terminals and check operation.

Connecting terminals		Operation direction
1	2	
⊕	⊖	DOWN
⊖	⊕	UP

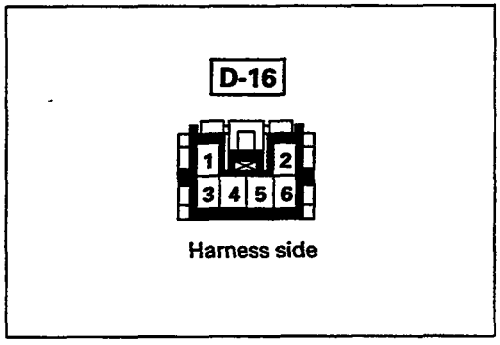

Rear Power Window Motor-RH

1. **Rear Power Window Switch-RH Connector Circuit**

   Disconnect the motor connector, apply the battery voltage (12V) to the harness side connector terminals and check operation.

Connecting terminals		Operation direction
5 (L/R)	6 (BR/W)	
⊖	⊕	DOWN
⊕	⊖	UP

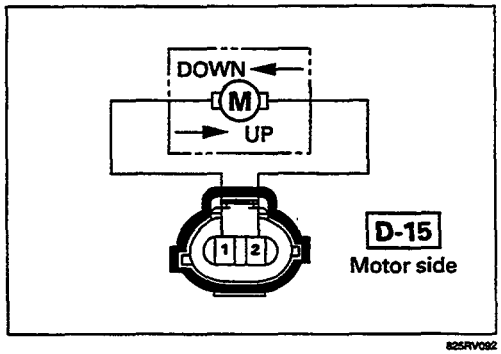

825RV092

2. **Rear Power Window Motor-RH Connector Circuit**

   Disconnect the switch connector, apply the battery voltage (12V) to the motor side connector terminals and check operation.

Connecting terminals		Operation direction
1	2	
⊕	⊖	DOWN
⊖	⊕	UP

PARTS LOCATION - AUDIO

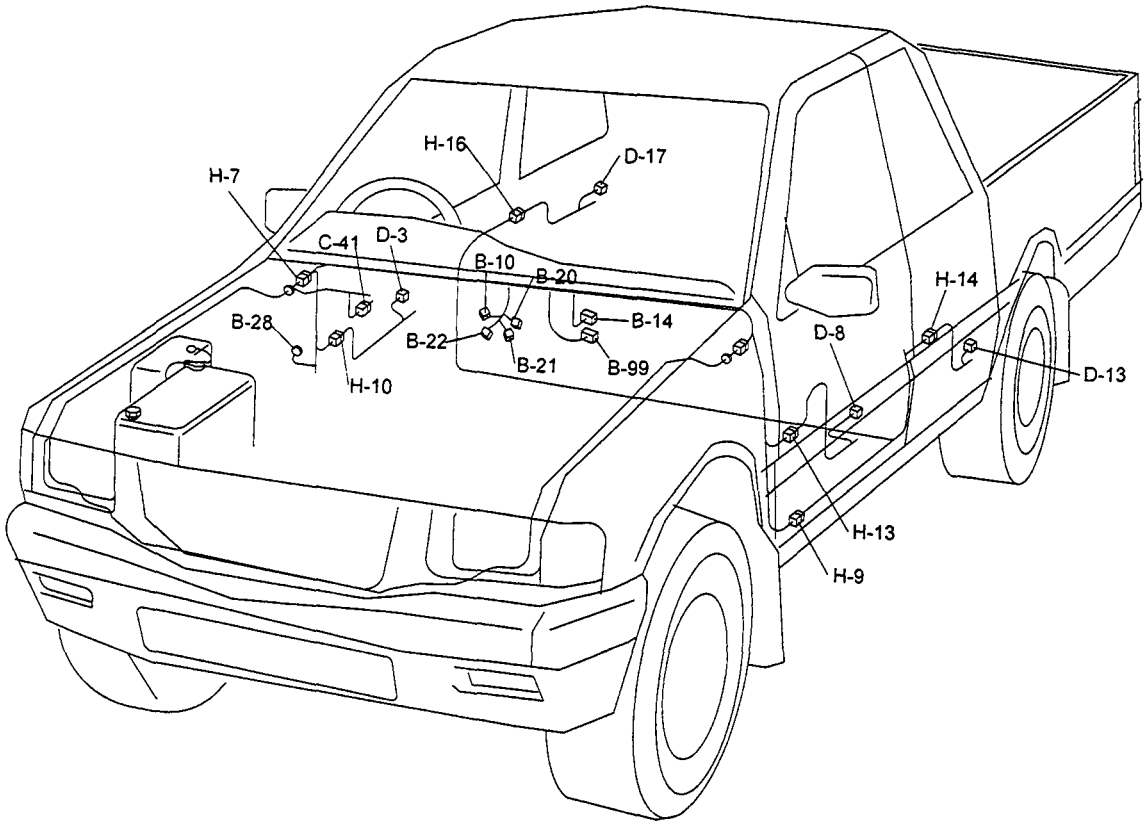

CIRCUIT DIAGRAM (RADIO)

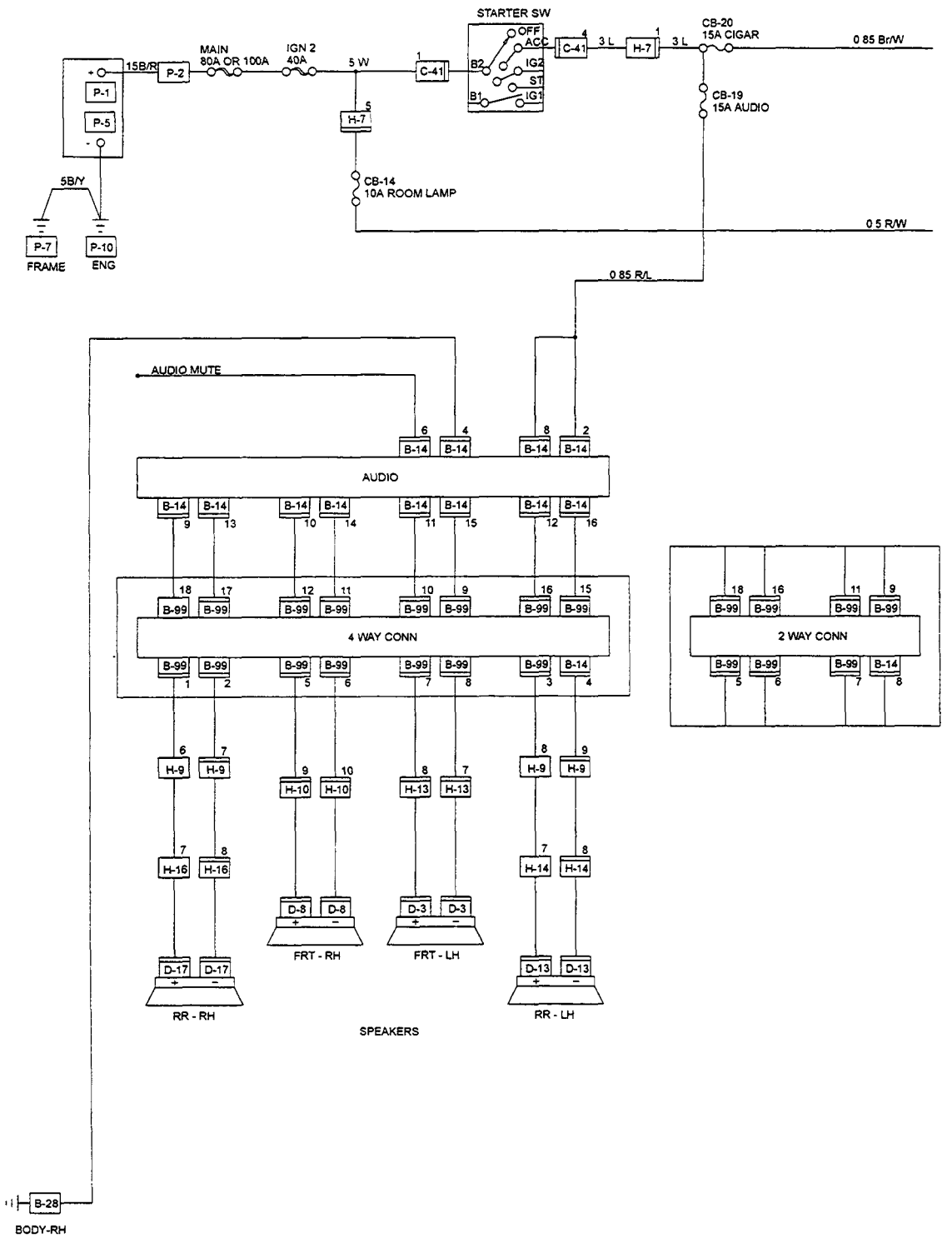

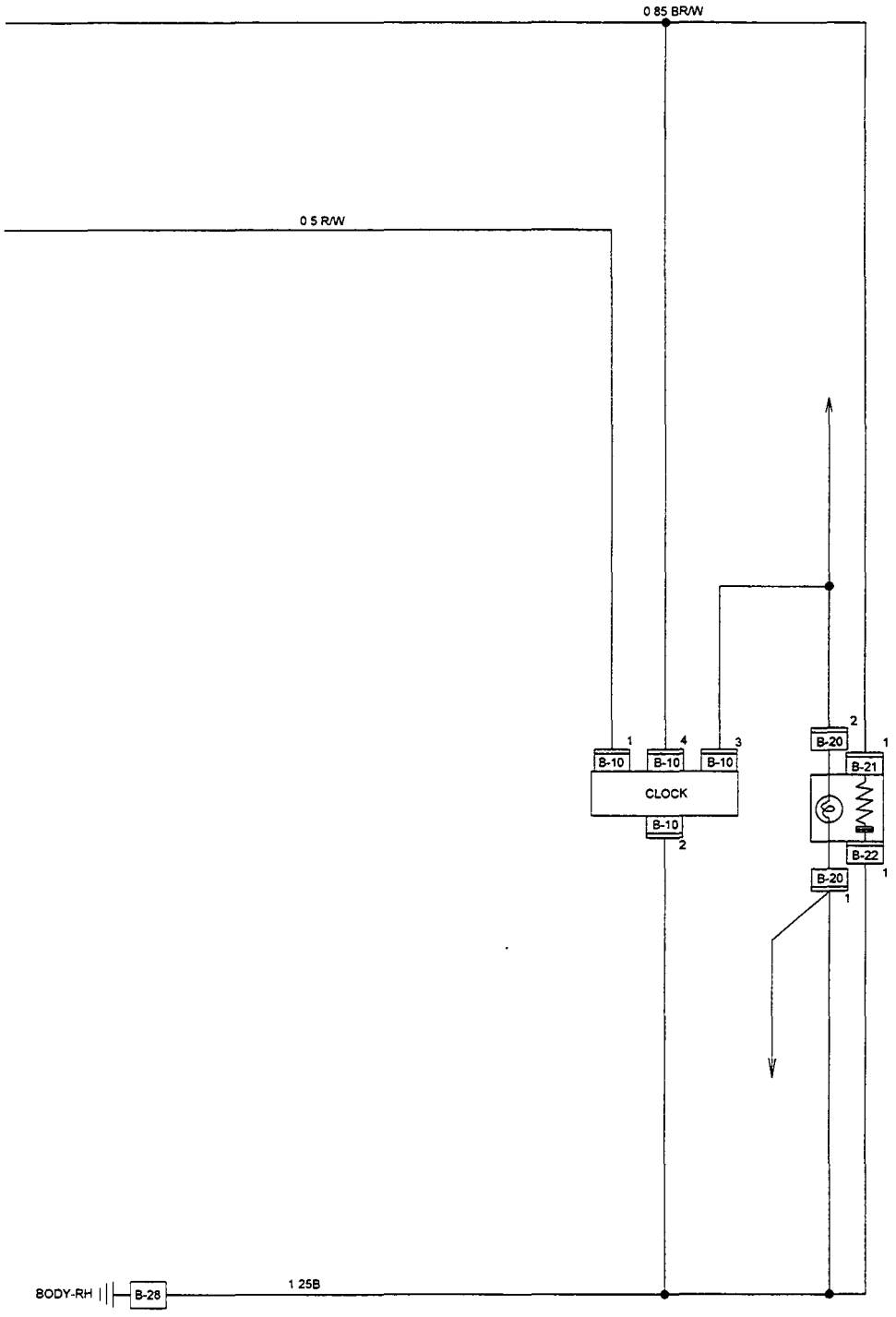
0 85 BR/W
0 5 R/W
B-10
B-10
B-10
CLOCK
B-10
B-20
B-21
B-22
B-20
BODY-RH
B-28
1 25B

TROUBLE SHOOTING

CIGARETTE LIGHTER

1. Lighter does not pop out after being pushed in. It does not become hot.

Checkpoint		Trouble Cause	Countermeasure
Audio system (System should receive power)	NG	Poor Fuse No. CB-20 (15A, Fuse box) contact or blown	Reinstall or replace the fuse No. CB-20 (15A)
OK			
Lighter continuity between center part and outer area	NG	Open circuit or poor connector contact	Replace the lighter
OK			
Voltage between connector 1 [B-21] and the ground at starter SW. is ACC position (Should be battery voltage present)	NG	Open circuit or poor connector contact	Repair open circuit or connector contact
OK			
Continuity between connector 1 [B-22] and the ground	NG	Open circuit or poor connector contact	Repair open circuit or connector contact

2. Lighter pops out prematurely before becoming hot

Lighter and casing	NG	Deformed lighter or casing	Repair or replace the lighter and/or casing

3. Lighter becomes too hot

Lighter and casing	NG	Deformed lighter and casing	Repair or replace the lighter and/or casing

REMOVAL AND INSTALLATION

AUDIO

Refer to Section 9 "ACCESSORIES" for details.

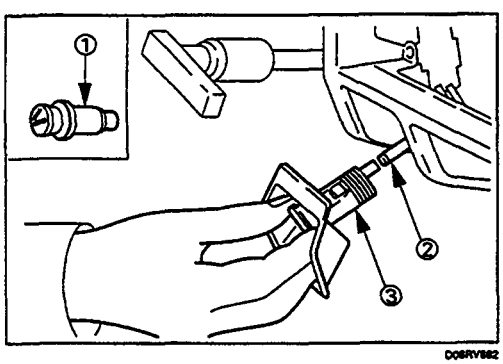

CIGARETTE LIGHTER

Removal

1. Remove the lighter ①.
2. Disconnect the connector ②.
3. Loosen the lighter holder ③ nut at the back side.
4. Remove the holder from the bezel.

Installation

Follow the removal procedure in the reverse order to install the lighter.

Pay close attention to the important points mentioned in the following paragraphs.

Connector

Be absolutely sure that the lighter connector is securely connected.

This will prevent a poor contact and an open circuit.

POWER DOOR MIRROR

PARTS LOCATION - NOT APPLICABLE MODEL YEAR 1997

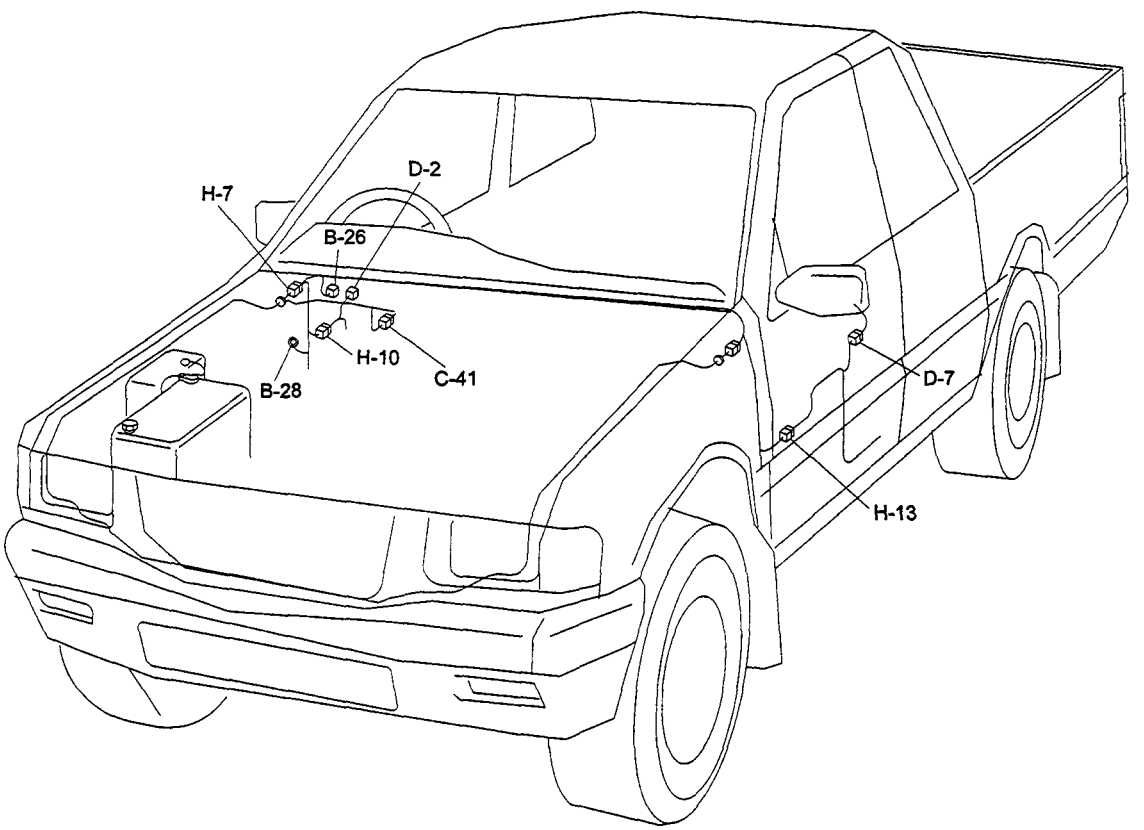

CIRCUIT DIAGRAM

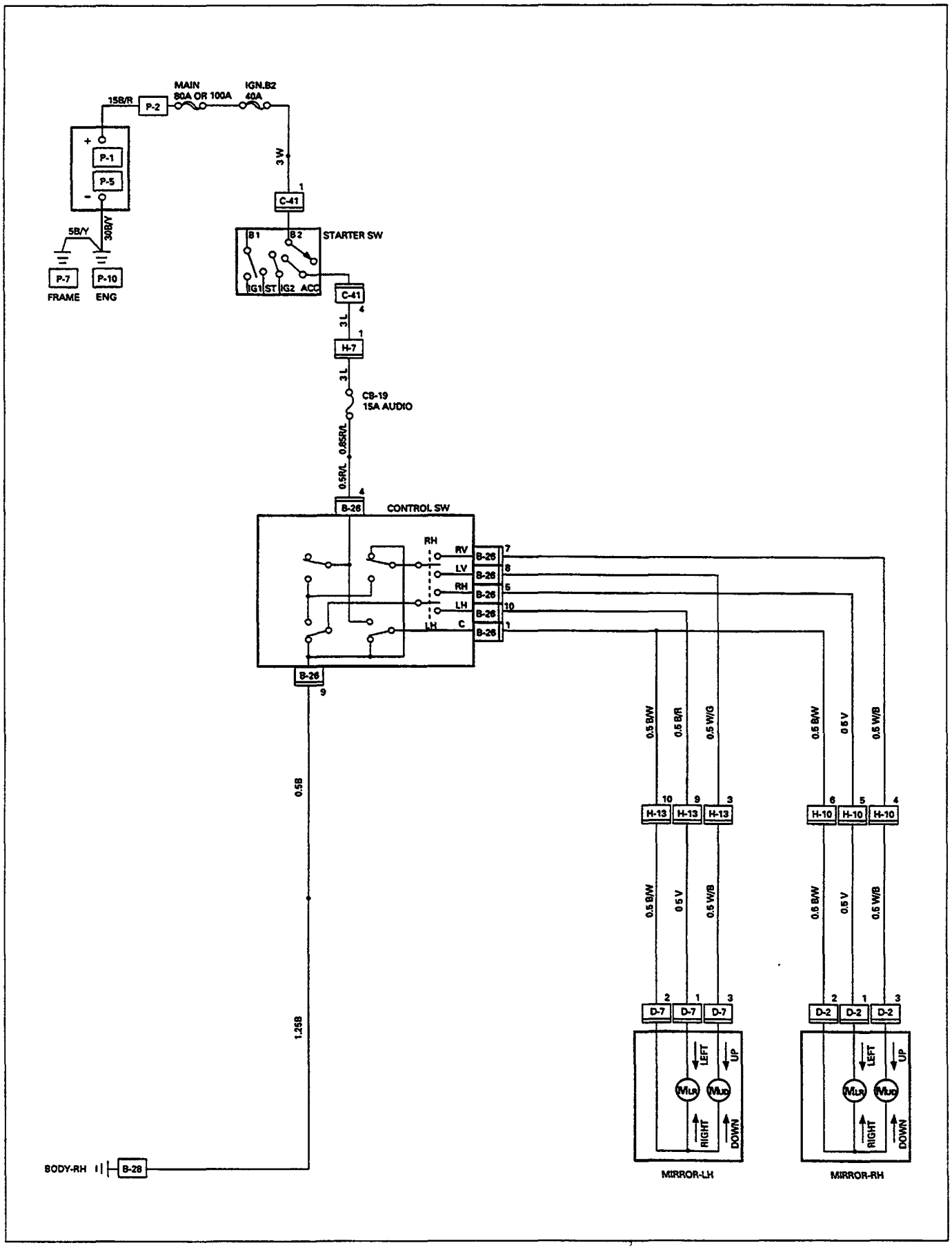

TROUBLE SHOOTING

QUICK CHART FOR CHECK POINTS

Check Points / Trouble Mode	Fuse	Door Mirror	Door Mirror		Cable Harness
	CB-19 (15A)	Control Switch	LH	RH	
1. Mirror on the both sides do not operate	○	○			○
2. Mirror on the left (or right) side goes not operate		○	○	○	○
3. Mirror on the both sides operate only in the vertical (or horizontal) direction		○			
4. Mirror on the left side operates only in the vertical (or horizontal) direction		○	○		○
5. Mirror on the right side operates only in the vertical (or horizontal) direction		○		○	○

TROUBLE SHOOTING

DOOR MIRROR CONTROL SWITCH

1. Mirrors on the both sides do not operate

Checkpoint		Trouble Cause	Countermeasure
Fuse No. CB-19 (15A, Fuse box)	NG	Poor fuse contact blown	Reinstall or replace the fuse No. CB-19 (15A)
OK			
Grounding point (B-28)	NG	Poor grounding point contact	Repair grounding point (B-28) contact
OK			
Voltage between the door mirror control SW. harness side connector terminal 4 B-26 and the ground (Should be battery voltage present)	NG	Open circuit or poor connector contact	Repair an open circuit or a poor connection of the connectors between the fuse No. CB-19 (15A) and B-26
OK			
Continuity between the door mirror control SW. harness side connector terminal 9 B-26 and B-28	NG	Open circuit or poor connector contact	Repair open circuit or connector contact
OK			
Door mirror control SW. function	NG	SW. malfunction	Replace the door mirror control SW.
OK			
Continuity between1 B-26 and 10 H-13 (or 6 H-10)	NG	Open circuit or poor connector contact	Repair open circuit or connector contact

2. Mirror on the left (or right) side does not operate

Checkpoint		Trouble Cause		Countermeasure
Door mirror control SW. function	NG	SW. malfunction	—	Replace the door mirror control SW.
OK				
Mirror function on the left (or right) side	NG	Mirror malfunction on the left (or right) side	—	Repair or replace the door mirror
OK				
Continuity between (LHD) 1 [B-26] and 2 [D-2] (1 [B-26] and 2 [D-7]) (RHD) 1 [B-26] and 2 [D-7] (1 [B-26] and 2 [D-2])	NG	Open circuit or poor connector contact	—	Repair an open circuit or a poor connection

3. Mirrors on the both sides operate only in the vertical (or horizontal) direction

Door mirror control SW. function	NG	SW. malfunction	—	Replace the door mirror control SW.

Mirror on the left side operates only in the vertical (or horizontal) direction

Door mirror control SW. function	NG	SW. malfunction	—	Replace the door mirror control SW.
OK				
Door mirror function	NG	Door mirror malfunction	—	Repair or replace the door mirror
OK				
Continuity between (LHD) 8 [B-26] and 3 [D-2] 10 [B-26] and 1 [D-2]) (RHD) 8 [B-26] and 3 [D-7] (10 [B-26] and 1 [D-7])	NG	Open circuit or poor connector contact	—	Repair an open circuit or a poor connection

5. Mirror on the right side operates only in the vertical (or horizontal) direction

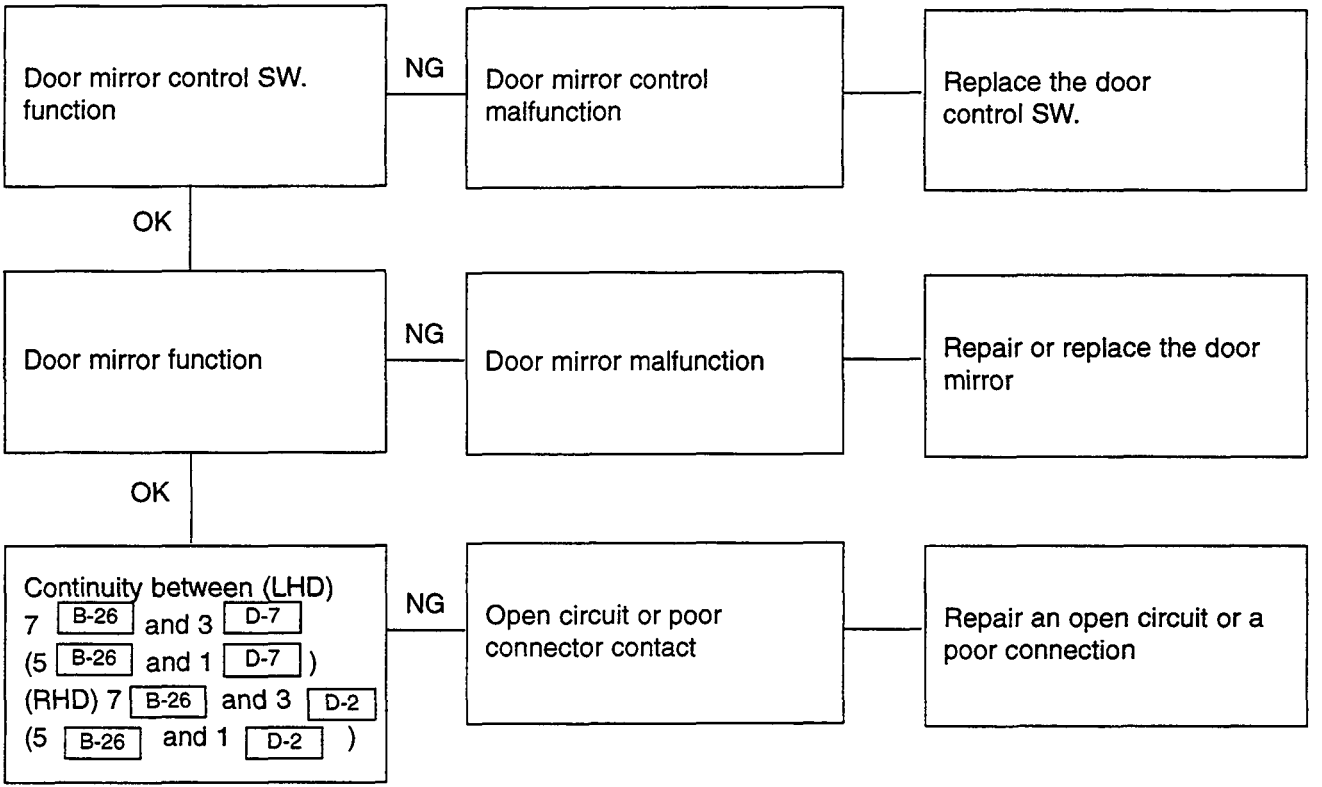

REMOVAL AND INSTALLATION

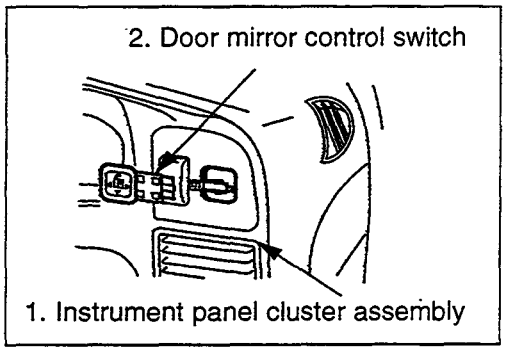

DOOR MIRROR CONTROL SWITCH

Removal

1. **Instrument Panel Cluster Assembly**
   - Refer to section 10 "BODY" for instrument panel cluster assemble by removal steps.
2. **Door Mirror Control Switch**
   - Disconnect the switch connector.
   - To remove the switch, push the lock from the back side of the cluster assembly.

Installation

To install, follow the removal steps in the reverse order.

DOOR MIRROR

Removal and Installation

Refer to DOOR MIRROR in section 10 "BODY".

INSPECTION AND REPAIR

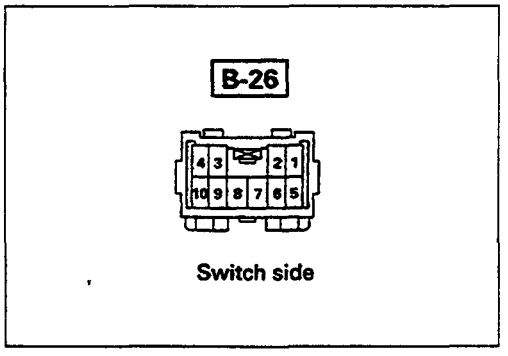

Door Mirror Control Switch

1. **Switch Side Connector Circuit**
   Check continuity between the switch connector terminals while operating the door mirror control switch as shown in the following table.

Switch position	Connector No.	4	9	1	8	10	7	5
Door mirror (RH)	Δ (Up)	○	○	○			○	○
	∇ (Down)	○	○	○			○	
	◁ (Left)	○	○	○			○	○
	▷ (Right)	○	○	○				○
Door mirror (LH)	Δ (up)	○	○	○	○	○		
	∇ (Down)	○	○	○	○			
	◁ (Left)	○	○	○	○	○		
	▷ (Right)	○	○	○		○		

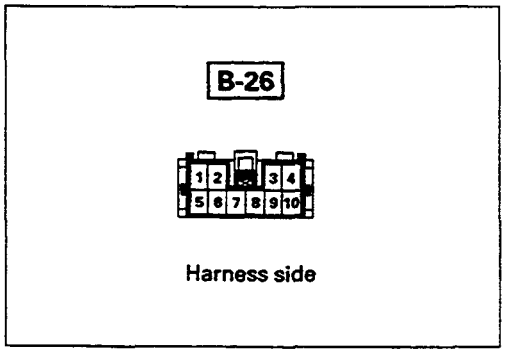

2. **Harness Side Connector Circuit**
   Remove the connector No. B-26 of the mirror control switch and check voltage and continuity of the harness side connector.
   - When there is no continuity at the terminal No. 5, 7, 8 and 10, it is considered that the circuit with terminal No. 1 (B/W) is defective.

- When there is no continuity at either one of the circuit No. 5, 7, 8 or 10, the motor in the mirror of the circuit itself is defective.

Terminal No.	Wire colour	Connecting to	Check item	Connecting terminal	Check condition	Standard
1	B/W	LH mirror & RH mirror	Continuity	1-Ground	-	No continuity
4	R/L	Fuse CB-19 (15A)	Voltage	4-Ground	Starter SW "ACC" position	Approx. 12V
5	V	RH mirror-LH/RH		5-1	-	
7	W/B	RH mirror-Up/Down		7-1	-	
8	W/G	LG mirror-Up/Down	Continuity	8-1	-	Continuity
9	B	Ground		9-Ground	-	
10	B/R	LH mirror-LH/RH		10-1	-	

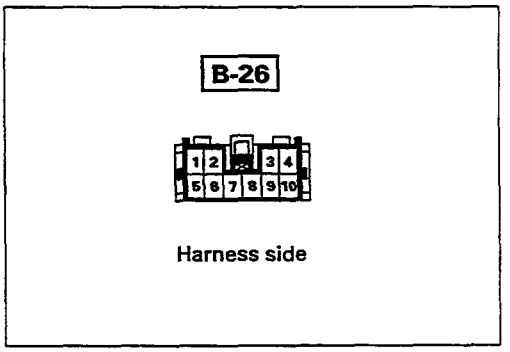

Door Mirror

1. **Door Mirror Control Switch Connector Circuit**
   Disconnect the switch connector (B-26), apply the battery voltage to the harness side connector terminals and check its function.

Connector No.	B-26					Operating direction
Mirror / Terminal No.	10	5	1	8	7	
Right Mirror		⊕	⊖			Left
		⊖	⊕			Right
			⊖		⊕	Up
			⊕		⊖	Down
Left Mirror			⊖			Left
	⊕		⊕			Right
			⊖	⊕		Up
			⊕	⊖		Down

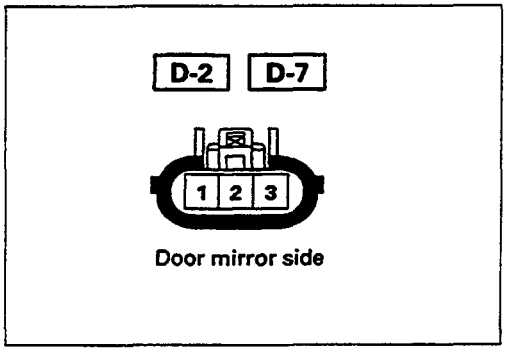

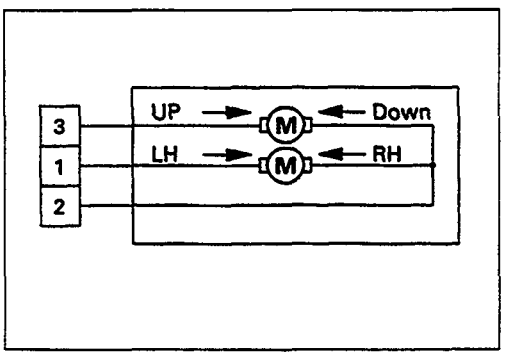

2. Door Mirror Connector Circuit

Disconnect the door mirror connector, apply the battery voltage to the door mirror side connector (D-2 and D-7) terminals and check its function.

Connector No.	D-2		D-7
Terminal No. / Operation	1	2	3
Up		⊖	⊕
Down		⊕	⊖
Left	⊕	⊖	
Right	⊖	⊕	

RADIATOR LEVEL CONTROL WARNING SYSTEM

PARTS LOCATION

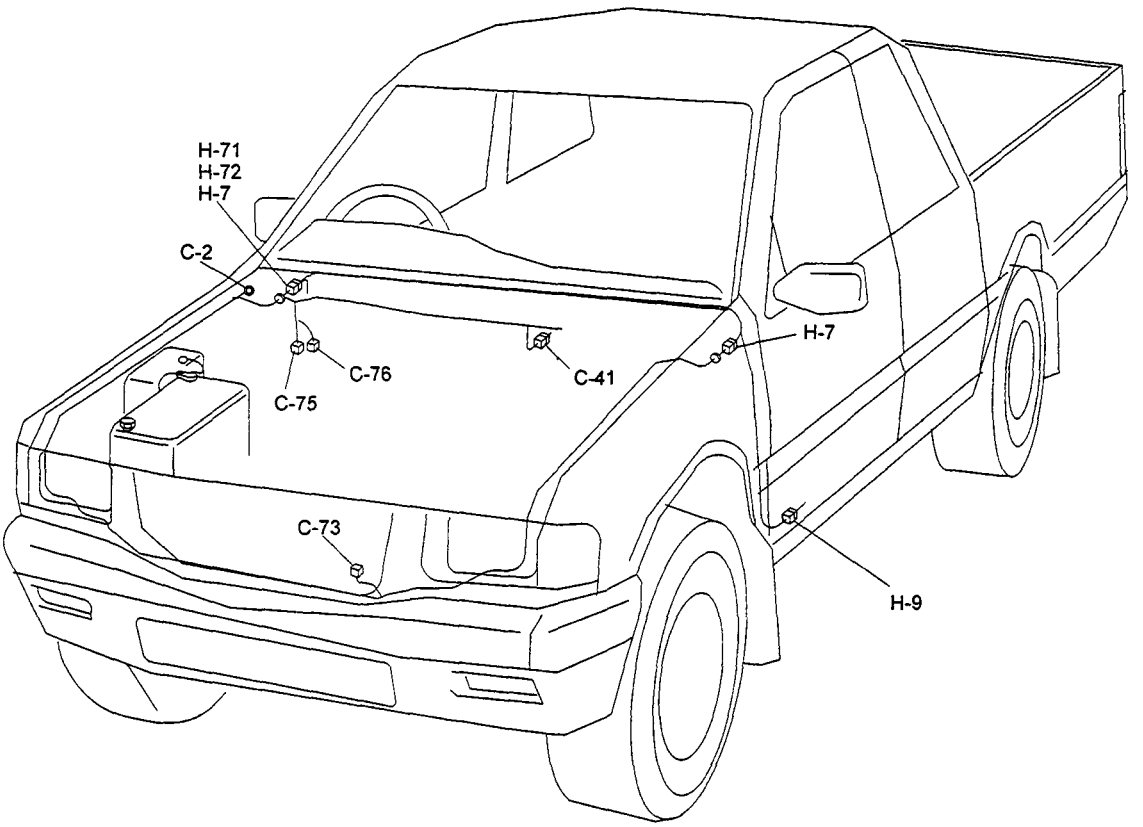

CIRCUIT DIAGRAM

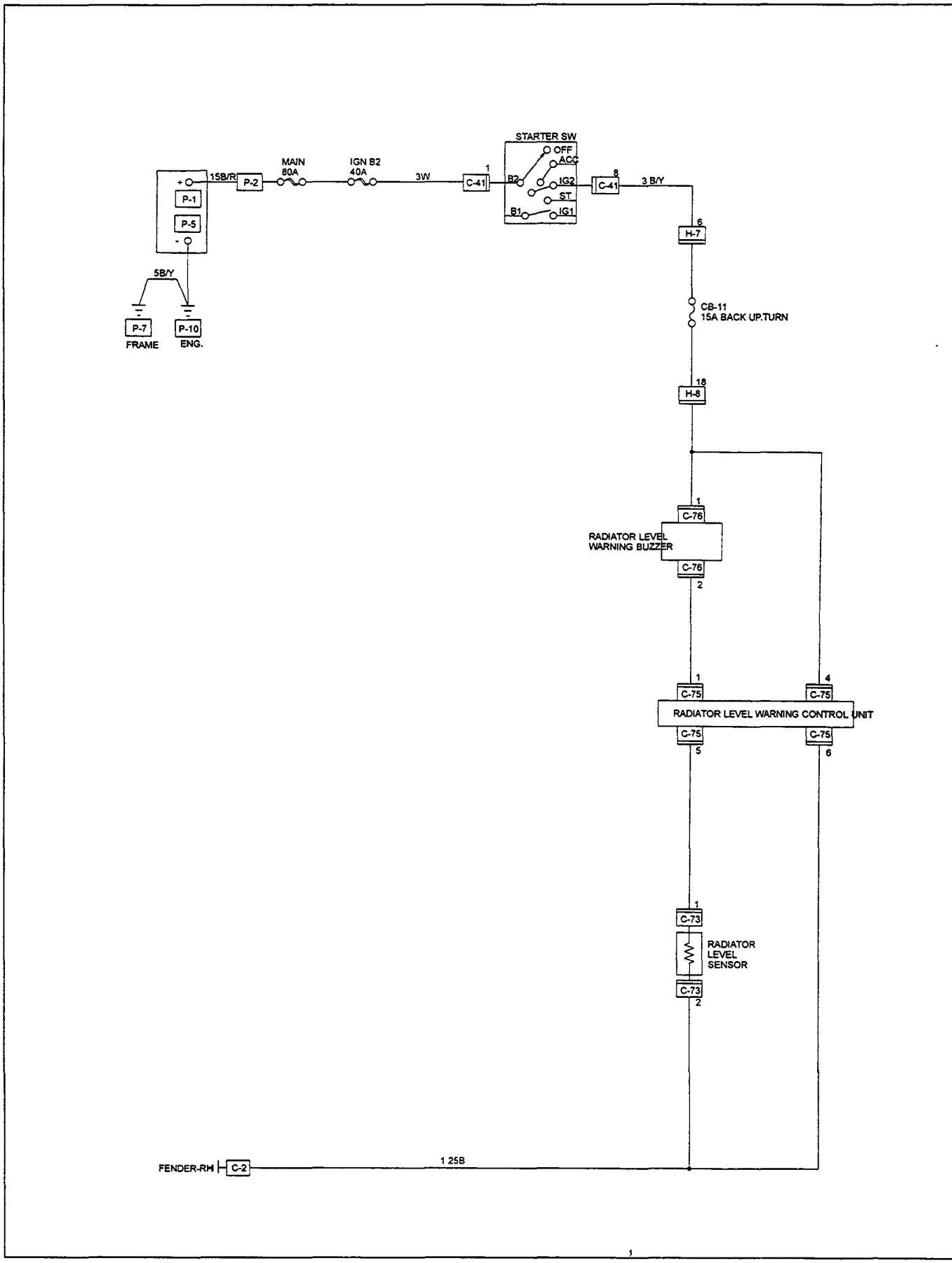

DIFF LOCK

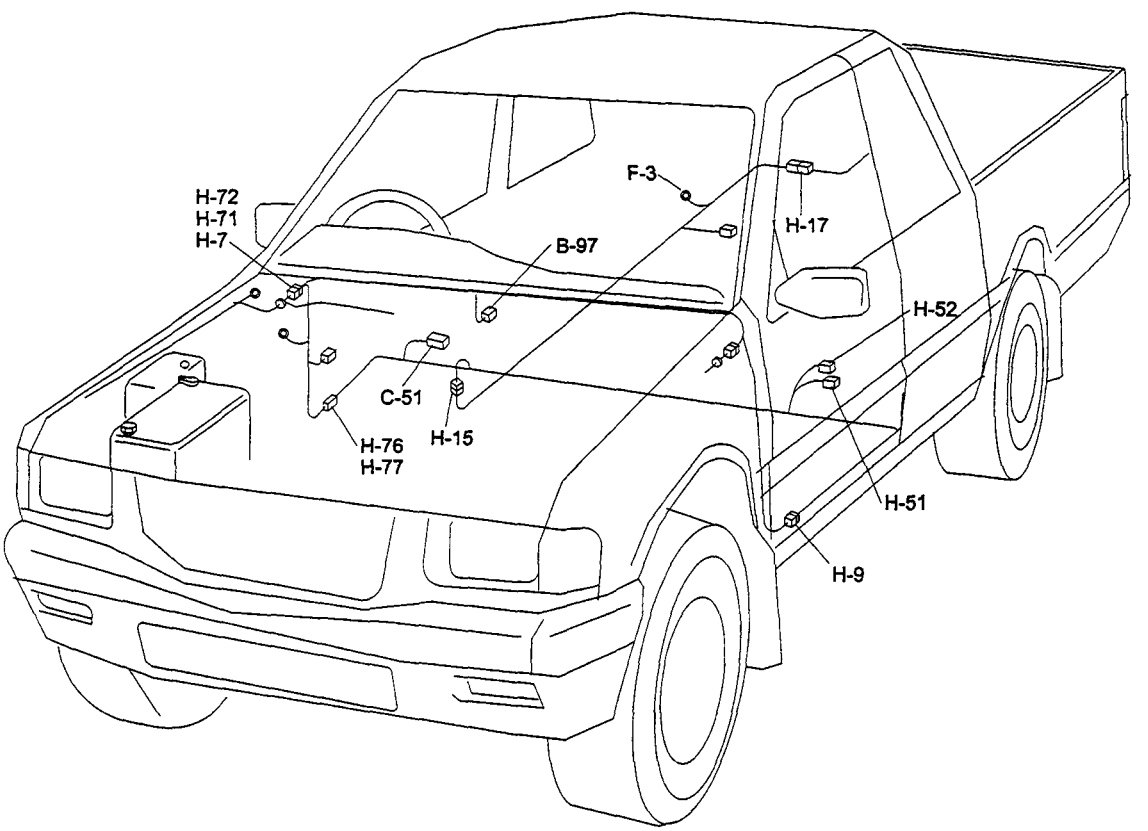

CIRCUIT DIAGRAM (DIFF LOCK)

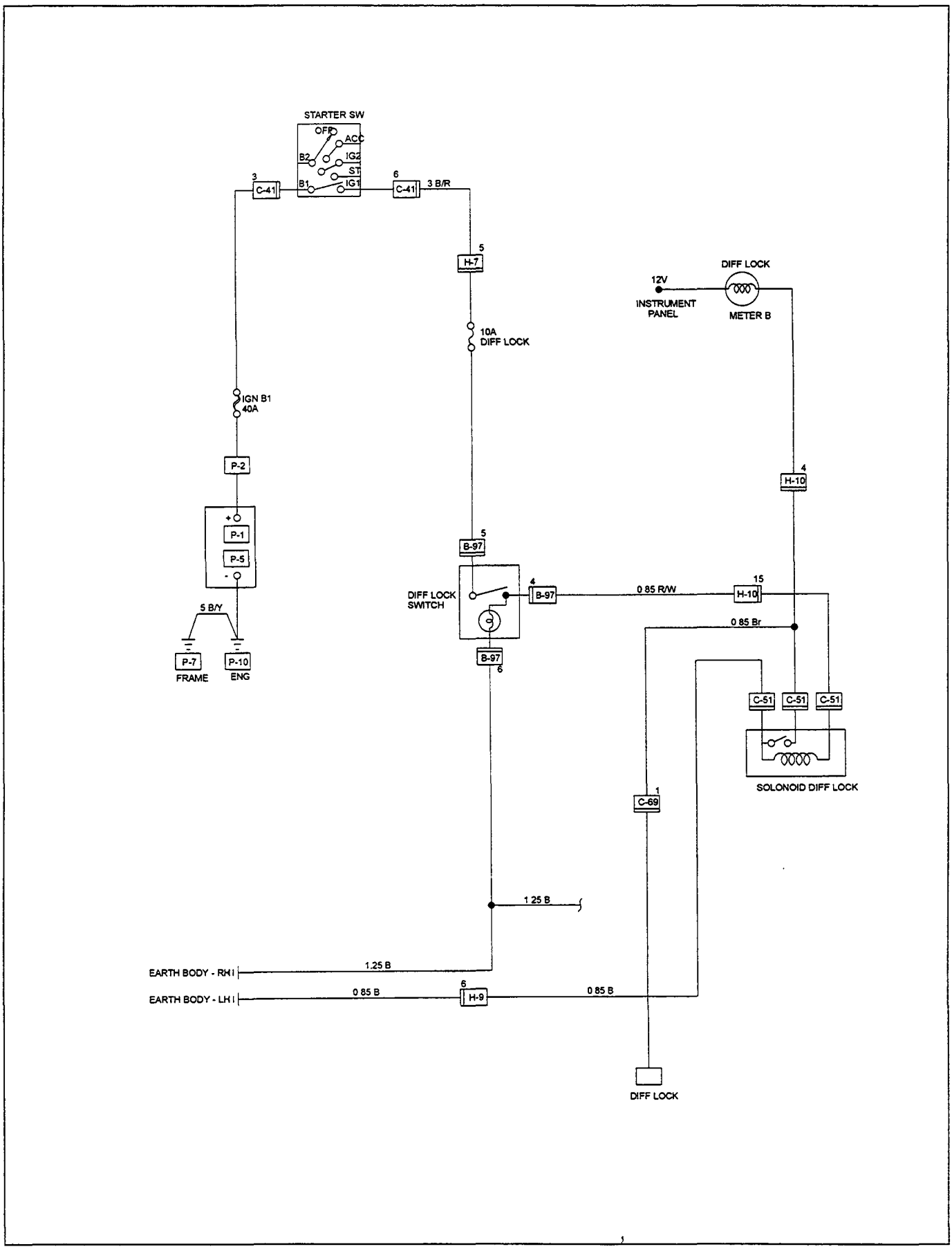

TROUBLE SHOOTING

DIFF LOCK

1. Diff-lock switch operation and test

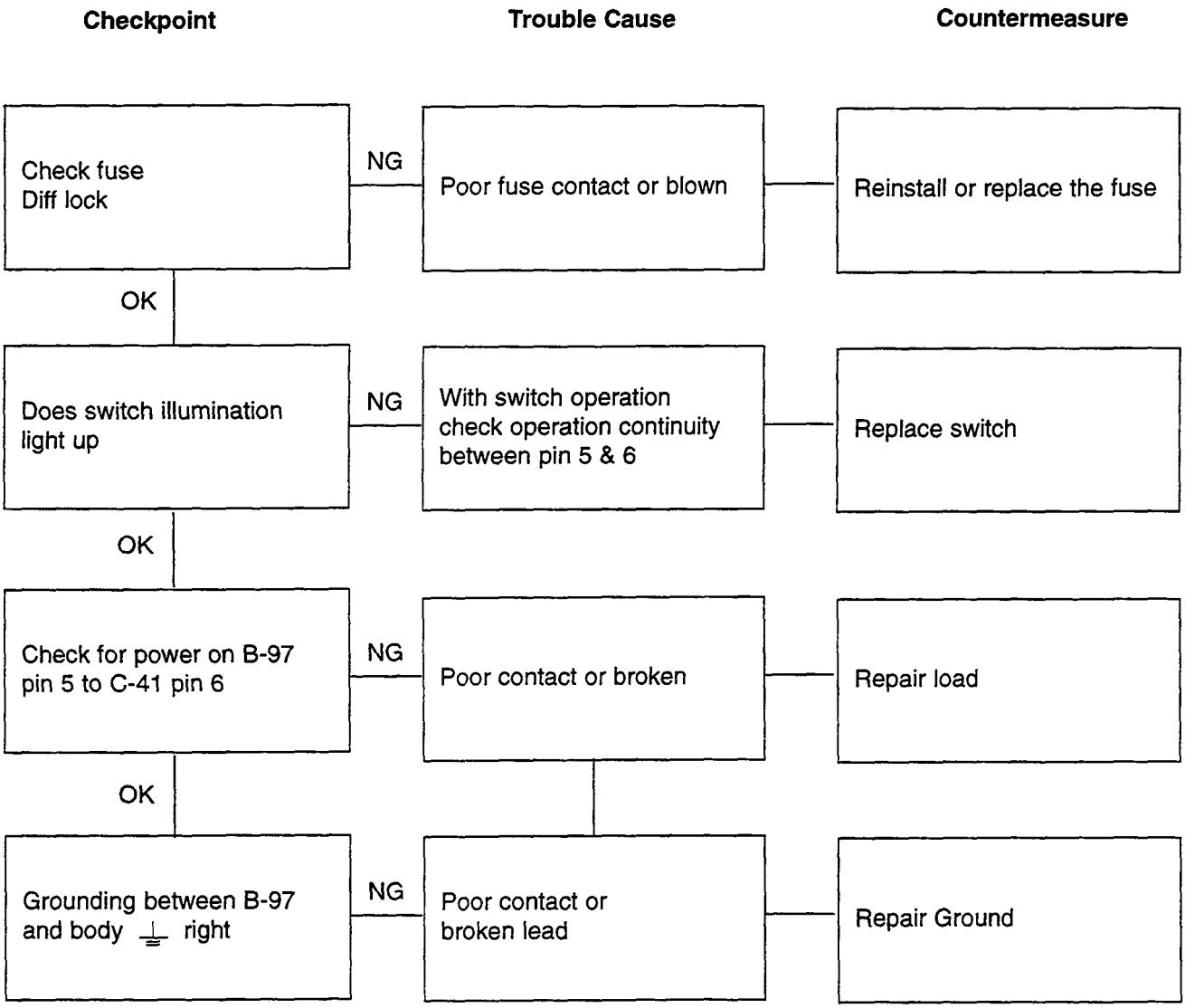

TROUBLE SHOOTING

1. To check diff lock solenoid

Checkpoint		Trouble Cause	Countermeasure
With switch operated check for 12V on R/W wire	NG	Break in continuity from B-97 pin 4	Repair lead
OK			
Check earth from solenoid to LH earth black lead	NG	Break in lead from diff lock solenoid to ⏚ LH	Repair lead
OK			
Check instrument panel that diff lock indicator is operational	NG	Break in circuit from solenoid to instrument panel	Check for continuity and repair or replace broken lead
OK			
Does diff lock have an on ⏚ lead at diff lock	NG	Possible disconnection or broken lead from solenoid to diff lock	Check continuity from solenoid through C-69 pin 1 to diff lock for continuity
OK			
Possible diff sensor failure - request help from a D.M.C. dealer			

REMOVAL AND INSTALLATION

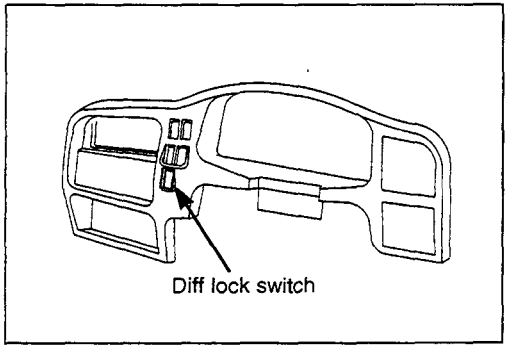

DIFF LOCK SOLENOID

Removal

1. Remove driver seat as shown in section 10
2. Tilt carpet to reveal diff lock solenoid.
3. Follow test procedure as shown in Troubleshooting
4. Replace Diff Lock solenoid if faulty.

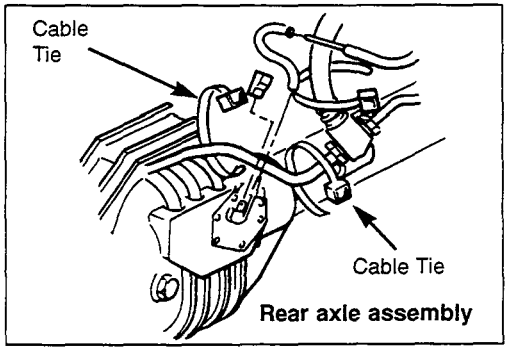

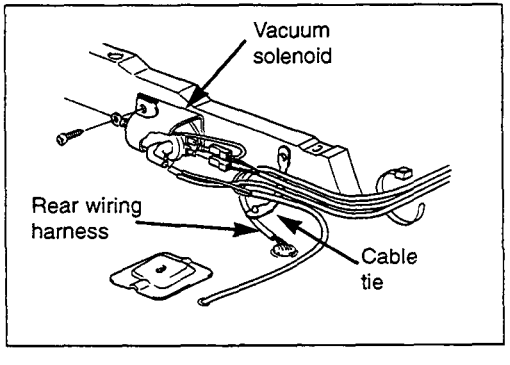

Installation

Follow REMOVAL procedure in reverse.

Note: Refer section 10 for removal and installation of driver seat.

CELL PHONE

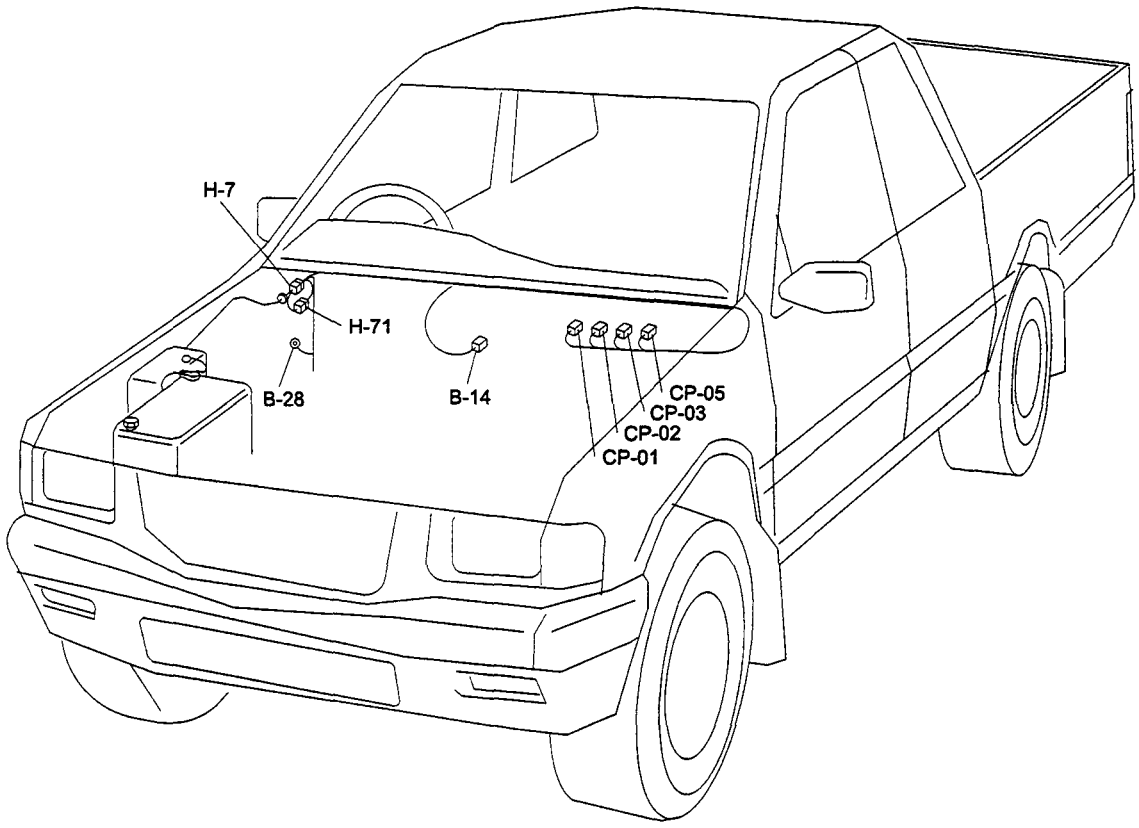

CELL PHONE LEADS

CIRCUIT DIAGRAM

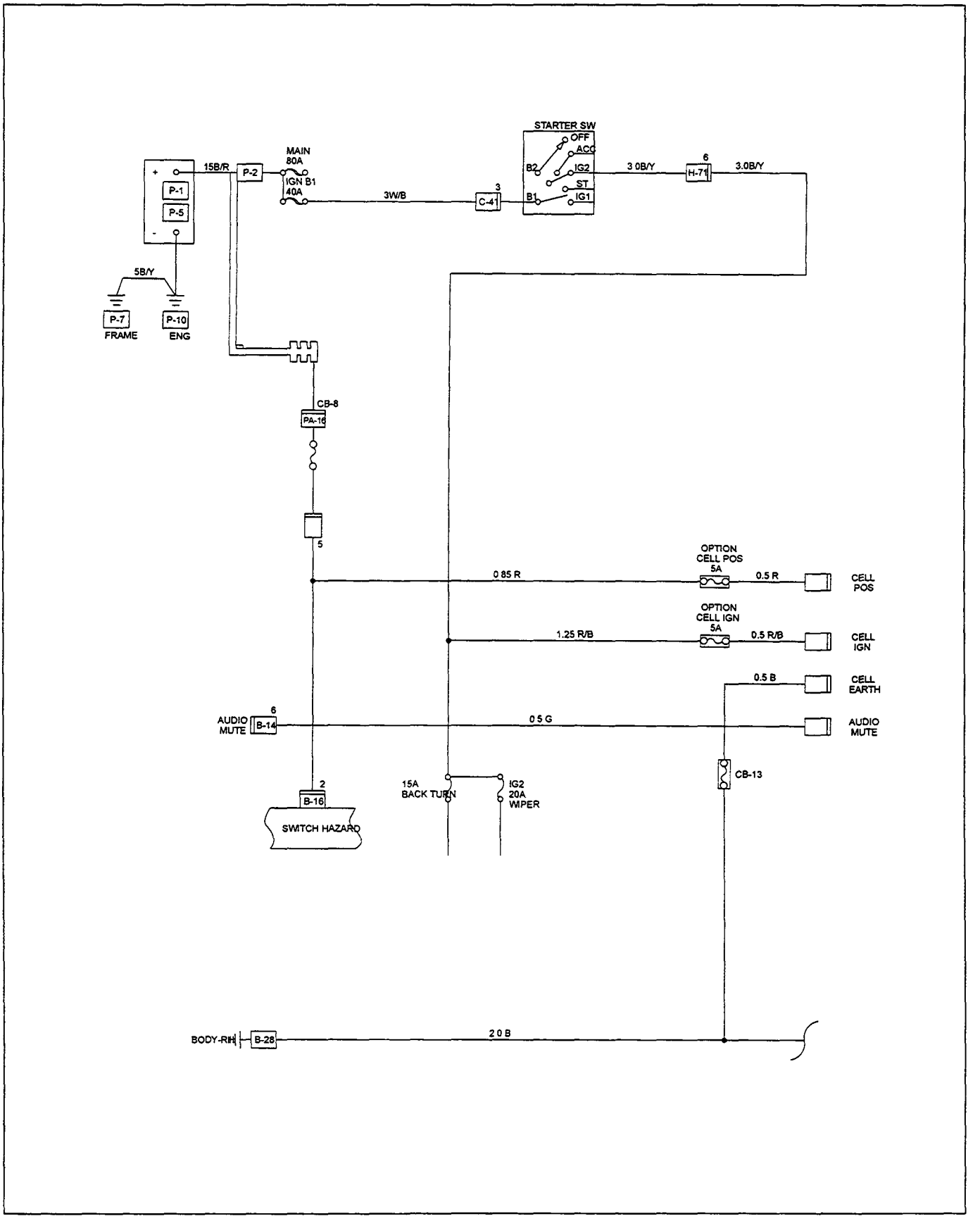

TROUBLE SHOOTING

Cell Phone Leads

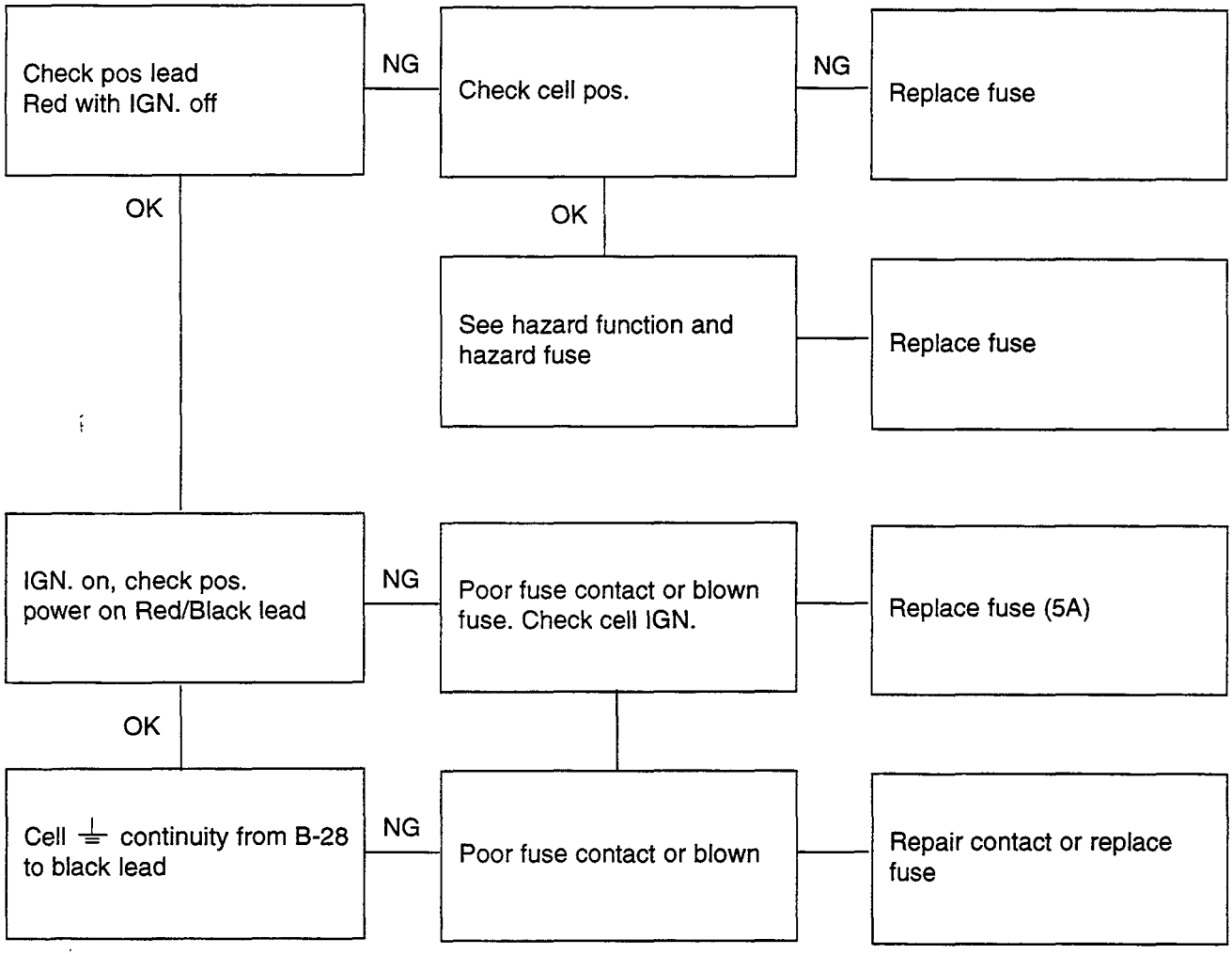

Mute Facility

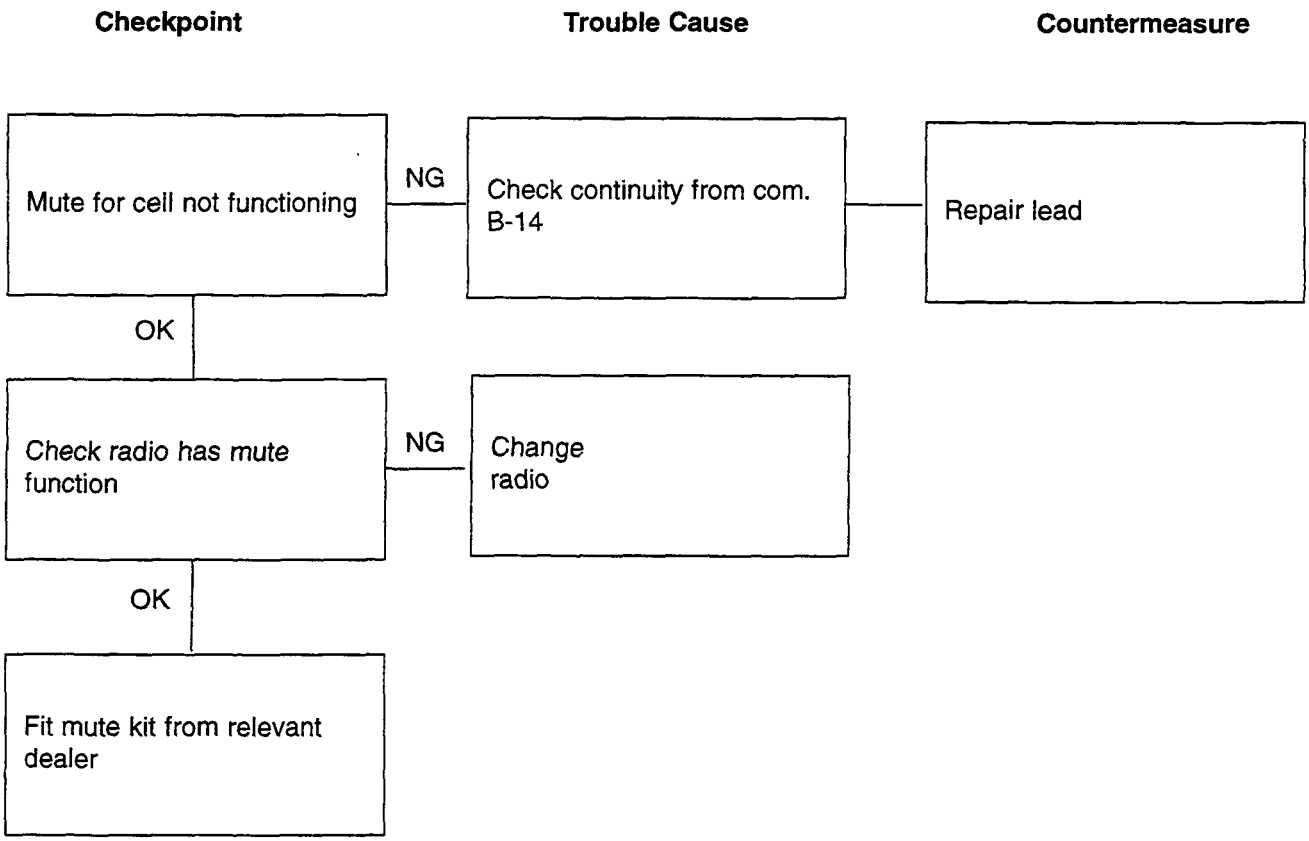

REMOVAL AND INSTALLATION

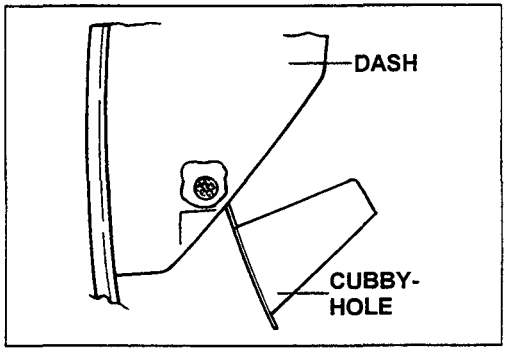

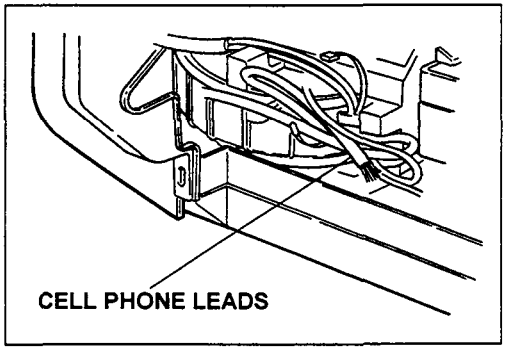

CELL LEAD

Removal

1. Open glove box and unclip from its open position.
2. Cut the tie strap holding cell phone leads in place.
3. Connect cell phone kit to leads supplied.

Installation

1. Fit new tie strap to secure cell phone leads.
2. Push close box back into closed position.

VEHICLE SECURITY SYSTEM

PARTS LOCATION

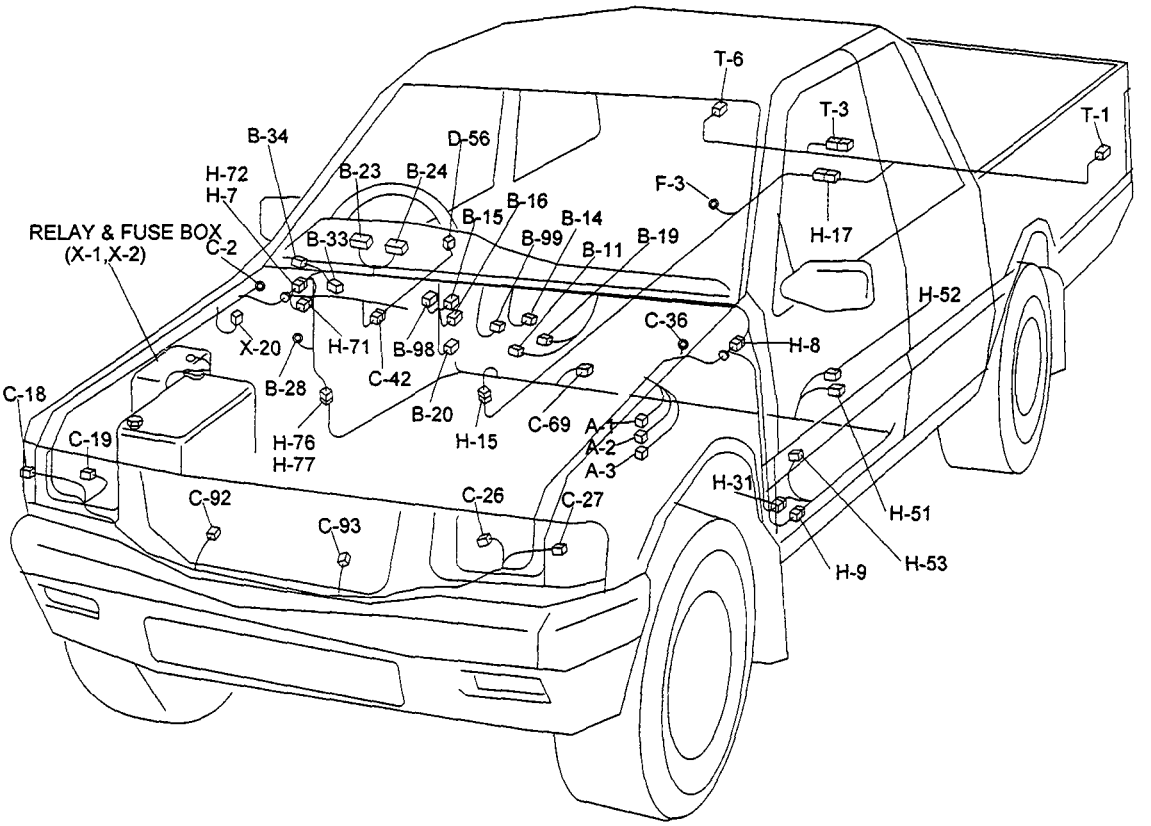

CIRCUIT DIAGRAM

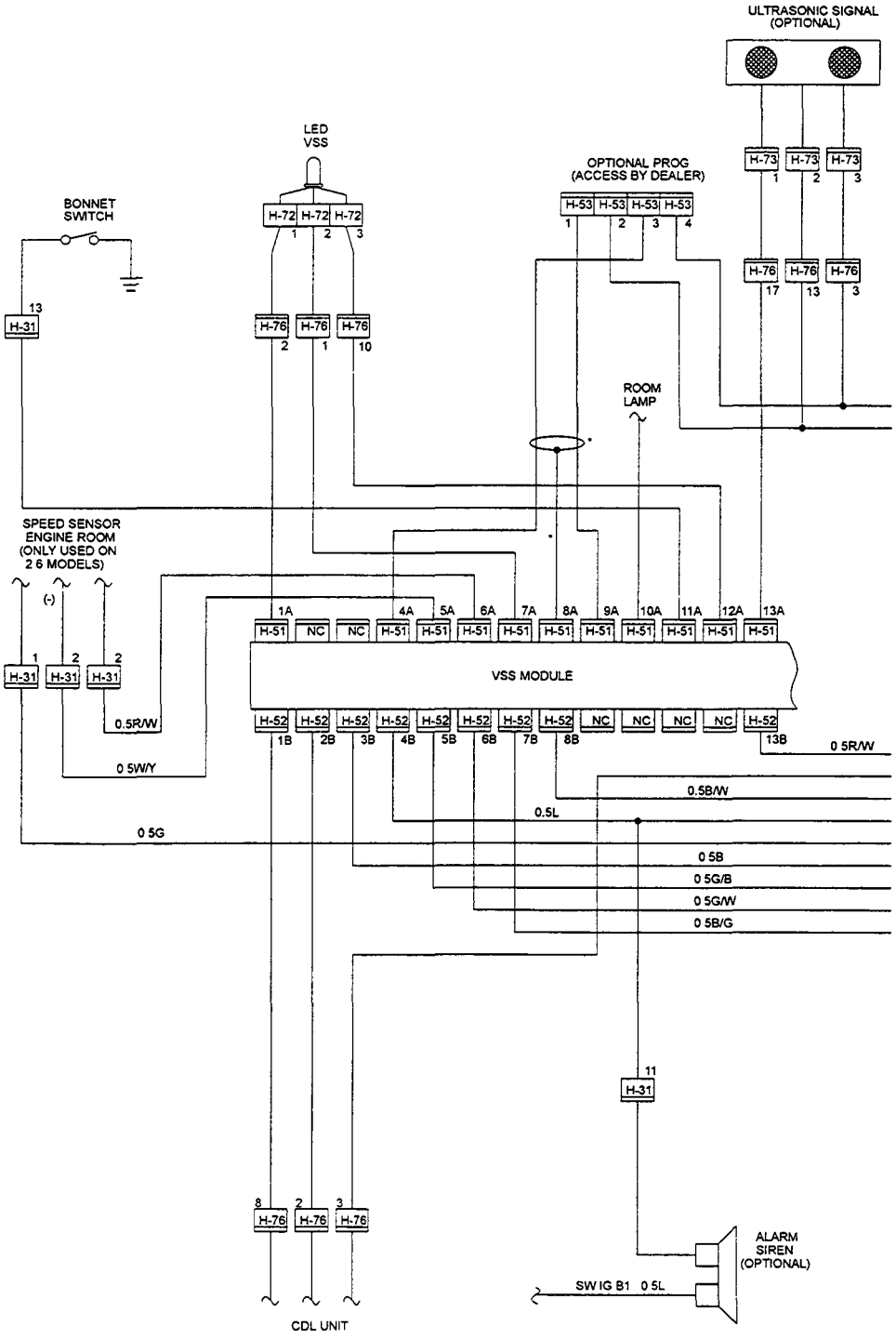

* SCREEN WIRE

CIRCUIT DIAGRAM

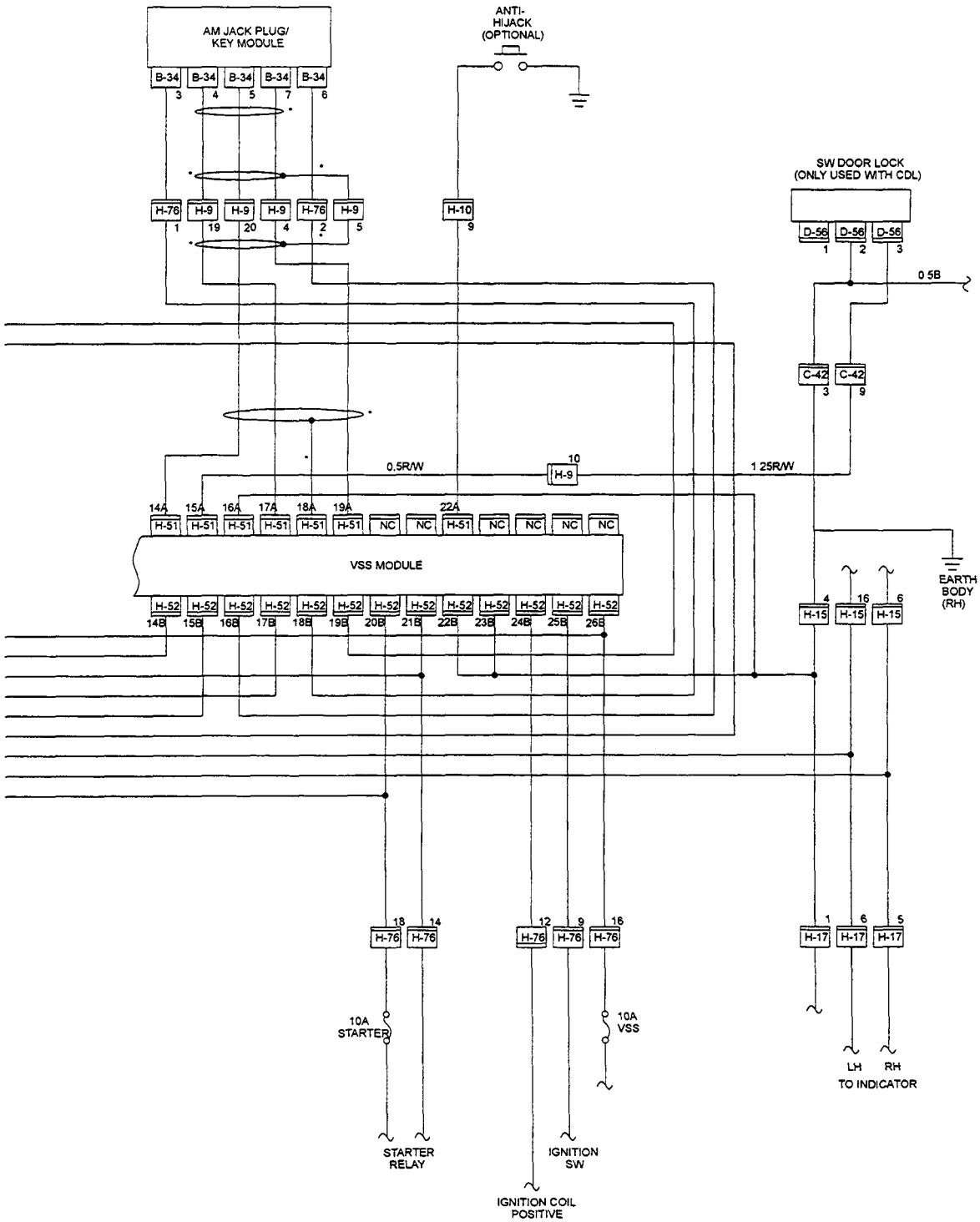

* SCREEN WIRE

VEHICLE SECURITY SYSTEM

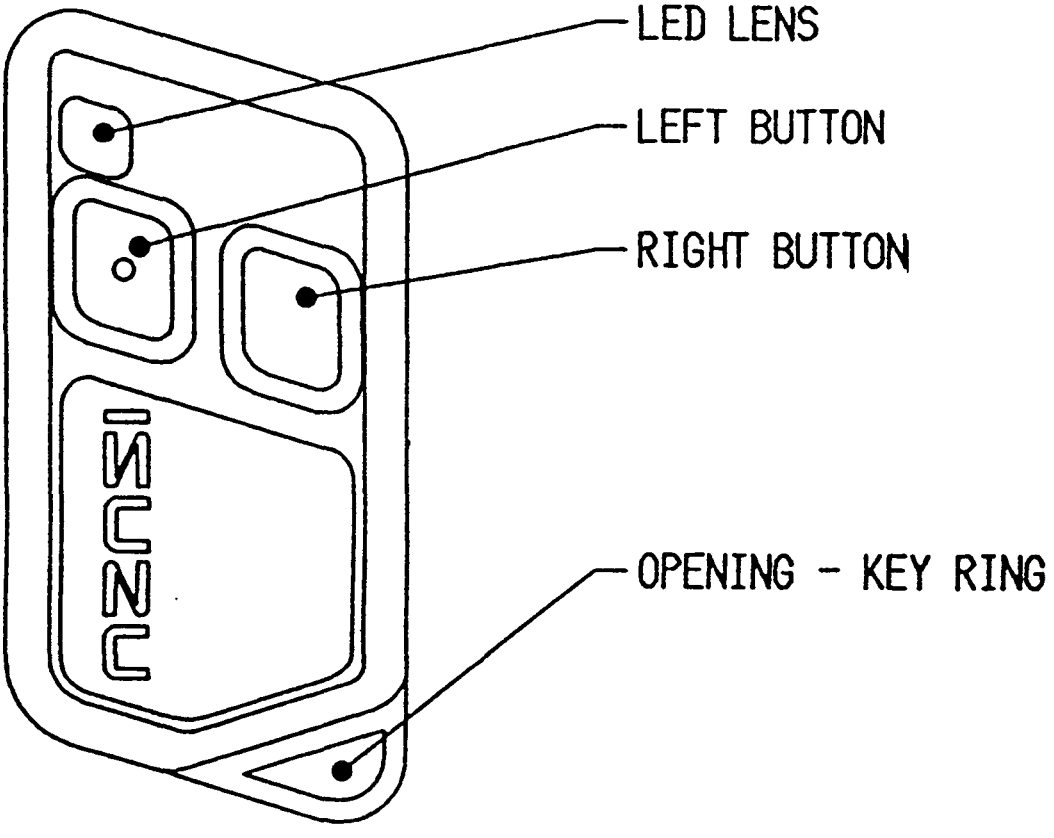

Operation
Resynchronise AM key.

Key Action
Press both buttons simultaneously,

Comment
Hold down until led stop flashing and turn on (2SEC).

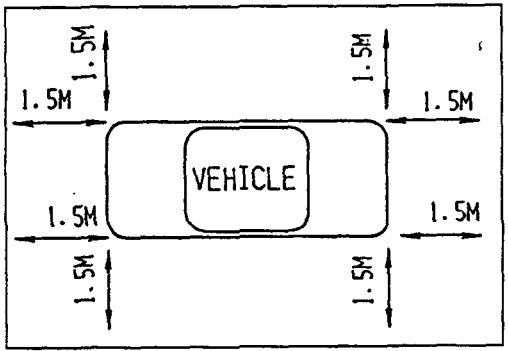

VSS REMOTE CONTROL CHECKING PROCEDURE

1. Place vehicle so that a 1.5 m perimeter is available all around.
2. Operate button one of transmitter (TX) so that all doors lock. If there is no response from the vehicle. (Doors lock/indicators flash), synchronise TX as fol lows:-
3. Stand at various points along 1.5 m perimeter to very TX range. (Refer SH 7 and 7).

V.S.S. REMOTE CONTROL OPERATIONS

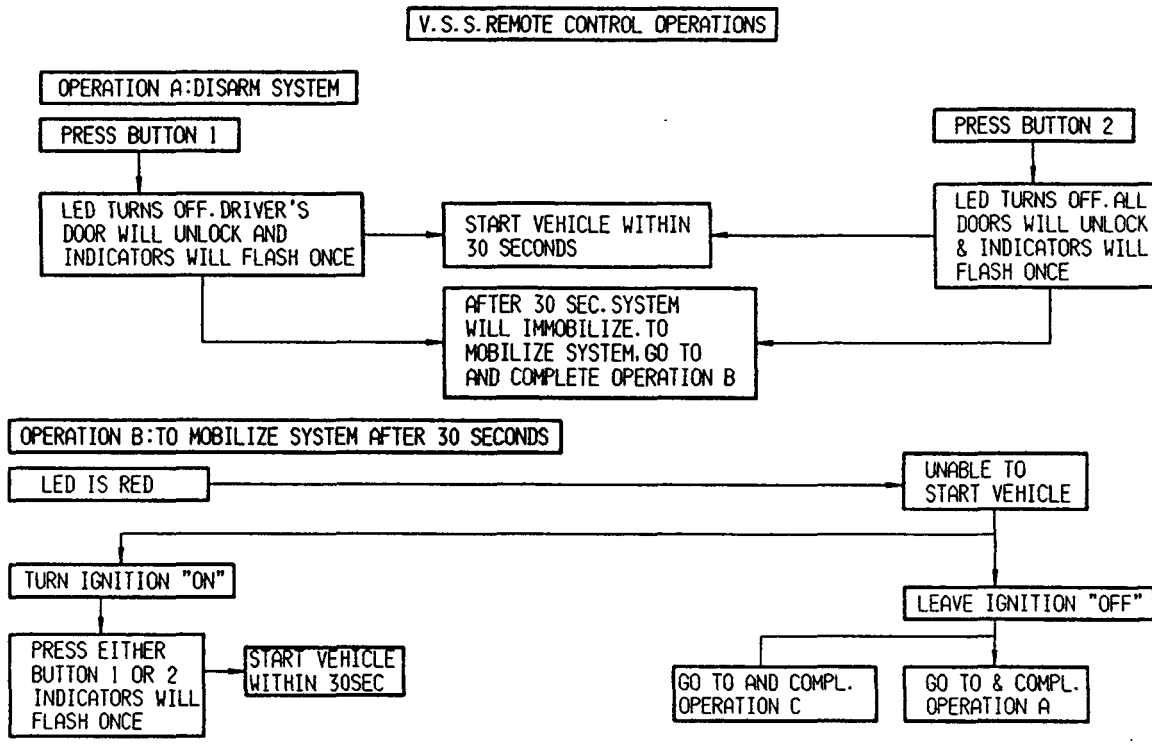

OPERATION C:ARM SYSTEM AND LOCK ALL DOORS

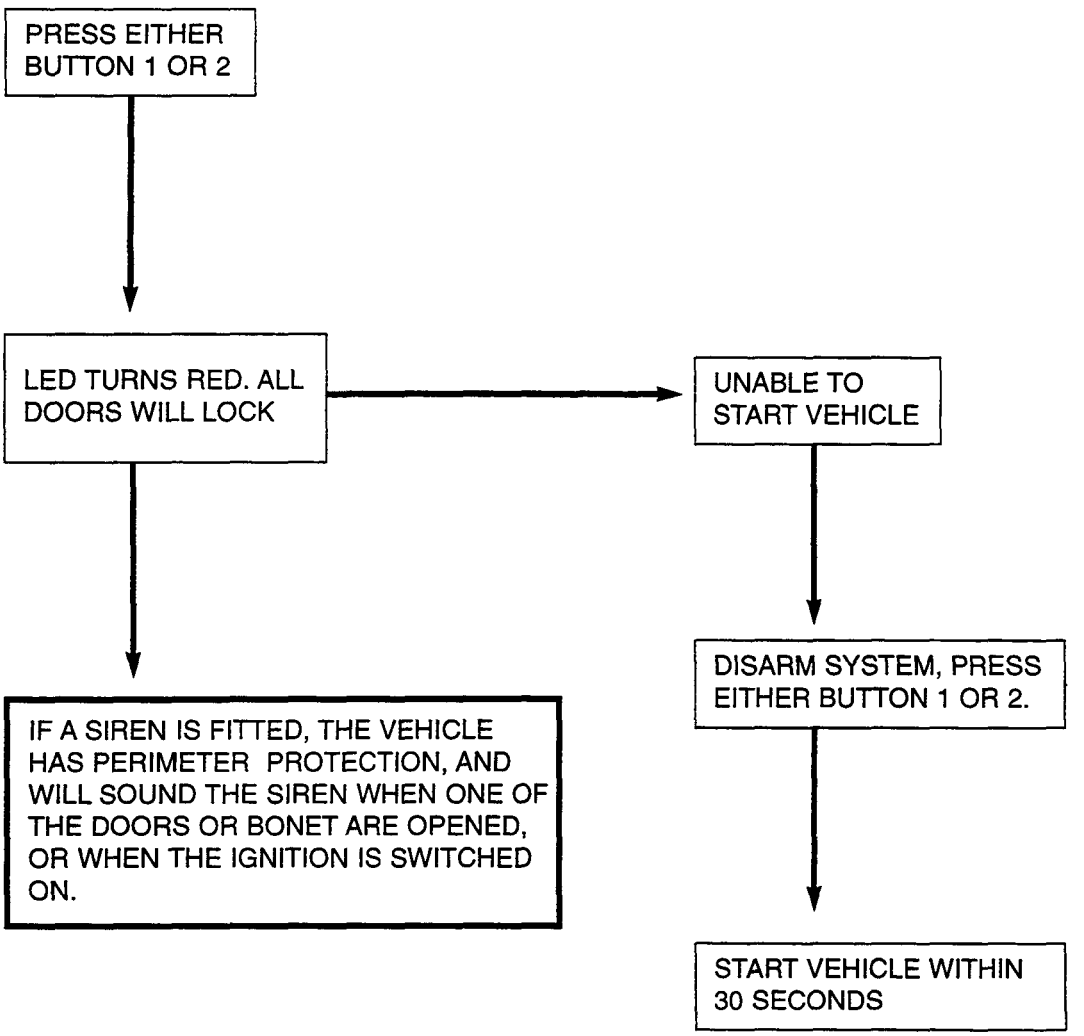

VSS IMMOBILISER

INTRODUCTION

Your Isuzu is factory fitted with a vehicle security system (VSS) that automatically immobilises the vehicle when the ignition is switched off. The vehicle may be mobilised by using the jackplug or remote key supplied. Systems using jackplug keys can be upgraded to use remote keys. Alarm functions and many other features can be added by your local dealer. For upgrade information please contact your dealer.

A status indicator light is mounted on the dashboard. On remote controlled systems, a red light indicates that the system is immobilised and armed, whilst an orange light indicates that the vehicle is only immobilised on jackplug systems a red light indicates that the vehicle is immobilised. An extinguished light indicates that the vehicle may be entered and started.

No service override is available on vehicles manufactured after May 1996.

OPERATION OF JACKPLUG SYSTEM

Mobilising the vehicle: The status light will be red when the vehicle is in the immobilised state.
Insert the jackplug key momentarily into the socket, situated below the light, while the ignition is switched off. The status light will be extinguished for 30 seconds during which the vehicle may be started.

Note:
For simple operation of the system refer flow chart A

IMMOBILISING THE VEHICLE

The vehicle will automatically be immobilised 30 seconds after the ignition is switched off. This condition is indicated by a red status light

OPERATION OF THE REMOTE CONTROL SYSTEM

Mobilising the vehicle and disarming the alarm: The status light will be orange when the vehicle is in the immobilised state or red if the alarm is armed. Press the remote key's left button (dimple) once to unlock the driver's door or the right to lock all doors on vehicle fitted with central locking. This will disarm and mobilise the vehicle. Flash the indicators once, turn the interior
dome light on for 30 seconds and extinguish the status light for 30 seconds during which time the vehicle may be entered and started.

Note:

1. **For simple operation of system refer flow chart B.**
2. **If remote key failure is experienced entry into vehicle may be gained by means of the ignition key**

Operation

Insert key into barrel & turn key to the left which will open all doors. (To close all doors, turn key to the right).

OPERATION FROM INSIDE OF VEHICLE USING LOCKING KNOB

Press driver's door locking knob and all doors will lock. (To open all doors lift driver's door locking knob.)

IMMOBILISING THE VEHICLE AND ARMING THE ALARM

The vehicle will automatically be immobilised 30 seconds after the ignition is switched off. This condition is indicated by the status light turning orange. The alarm may be armed and the doors can be locked, on systems fitted with central door locking, by pressing any button on the remote key. The status light will turn red and the indicators will flash twice.

Note:

For simple operation of system refer flow chart C.

VSS IMMOBILISER

THINGS TO REMEMBER ABOUT YOUR REMOTE KEYS

Remote keys will operate correctly only when you are close to your vehicle.

Pressing a key's button in for more than one second does not improve operation. The duration of transmission is determined electronically and not by the amount of times the button is pressed.

Press once and let go for best results.

Replace batteries every 12 months with Renata R393 or equivalent.

LOSS OF SYNCHRONISATION

It will not be possible to arm or disarm the alarm if synchronisation is lost. This will happen if:

a) A key's button is pressed more that 64 times while out of the system's operating range.
b) an attempt is made to re-synchronise when not within the normal operating range.
c) A key's batteries are replaced.

SYNCHRONISATION

Synchronise the key be pressing both buttons until the key's red light stops flashing. The vehicle's indicators will turn on for 3 seconds if synchronisation has taken place. Ensure that you are within one metre from the driver's door.

REMOTE KEY REPLACEMENT AND REPAIRS

Your Delta dealer has the necessary computerised test equipment and has been trained to analyse
and rectify any problem in the unlikely event of a malfunction or failure. He can replace a lost key as long as you have one working key available. It will, for security reasons, be necessary to replace the complete security system if all keys are lost. The system supports only two keys.

VSS IMMOBILISER - JACK - PLUG KEY

To start the vehicle, insert the Jack Plug Key (Item 1) in the socket (Item 2). Remove the jack Ply Key once the red indicator (Item 3) is off. Start the vehicle within thirty seconds.

Note:
Should you not start the vehicle within thirty seconds, the red indicator will light up again.
Insert the Jack Plug Key in the socket and remove when the red indicator is off.

The red indicator will light up after a thirty second period once the ignition is switched off.

CONNECTOR LIST

No.	Connector face	No.	Connector face
B-1		B-11	
B-2		B-12	
B-3		B-13	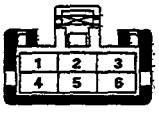
B-4	NOT USED	B-14	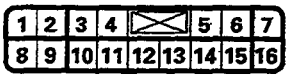
B-5		B-15	
B-6	NOT USED	B-16	
B-7	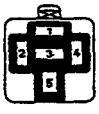	B-17	NOT USED
B-8	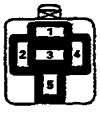	B-18	NOT USED
B-9	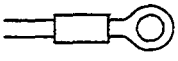	B-19	
B-10	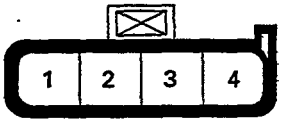	B-20	

No.	Connector face	No.	Connector face
B-21		B-31	—
B-22		B-32	NOT USED
B-23		B-33	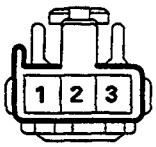
B-24		B-99	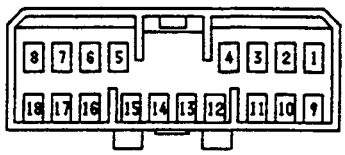
B-25	NOT USED	B-50	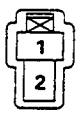
B-26	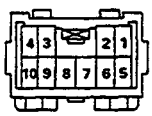	B-34	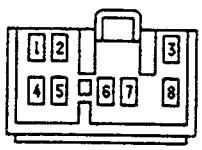
B-27	NOT USED		
B-28			
B-29			
B-30	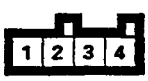		

No.	Connector face	No.	Connector face
C-1	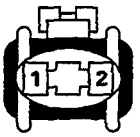	C-11	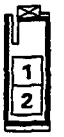
C-2		C-12	NOT USED
C-3		C-13	NOT USED
C-4	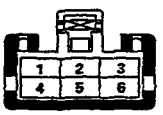	C-14	NOT USED
C-5		C-15	
C-6		C-16	NOT USED
C-7		C-17	
C-8	NOT USED	C-18	
C-9	NOT USED	C-19	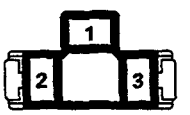
C-10	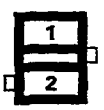	C-20	

No.	Connector face	No.	Connector face
C-21		C-37	
C-22	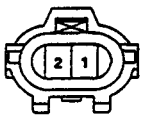	C-38	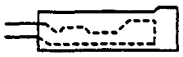
C-23	NOT USED	C-39 (LHD)	
C-24		C-39 (RHD)	
C-25	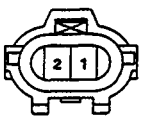	C-40	
C-26	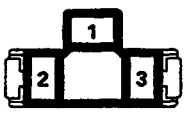	C-41	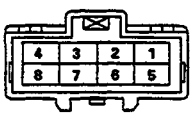
C-27		C-42	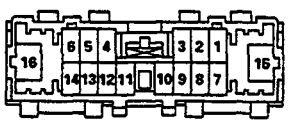 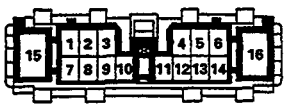
C-28 ~ C-34	NOT USED	C-43	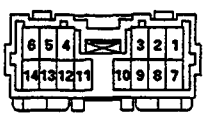
C-35	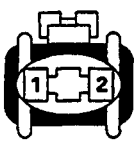	C-44	
C-36		C-45	

No.	Connector face	No.	Connector face
C-46		C-52	
C-47	(GASOLINE)	C-53 ~ C-57	NOT USED
C-47	(DIESEL)	C-58	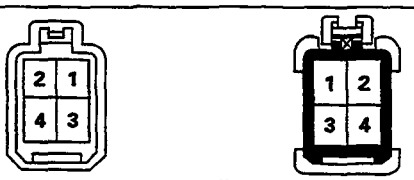
C-48	(GASOLINE)	C-59	NOT USED
C-48	(4JA1)	C-60	
C-48	(4JA1 FOR SOUTH AFRICA)	C-60	(CHINA)
C-48	(4JB1)	C-61	
C-49	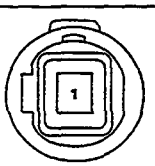	C-62	
C-50	NOT USED	C-63	NOT USED
C-51	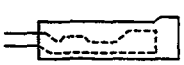 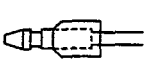	C-64	NOT USED

No.	Connector face	No.	Connector face
C-65	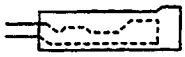	C-74	
C-66		C-75	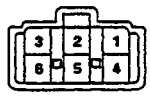
C-66	(CHINA) 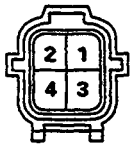	C-76	
C-67	NOT USED	C-77	
C-68		C-78	
C-69	NOT USED	C-78	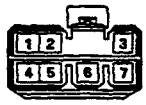 (4ZD1 WITH CATALYSIS CONTROL)
C-70	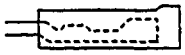	C-79	
C-71		C-80	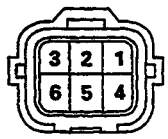
C-72		C-81	
C-73		C-82	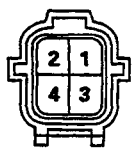

No.	Connector face	No.	Connector face
C-83			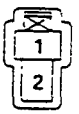
C-84			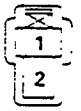
C-85	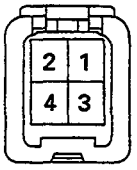		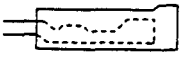
C-86	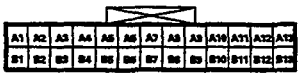		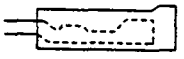
C-87			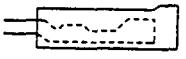
C-88	**NOT USED**		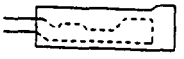
C-89	**NOT USED**		
C-90			
C-91			

No.	Connector face	No.	Connector face
D-1	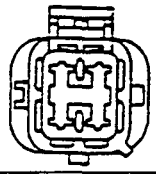	D-11	
D-2		D-12	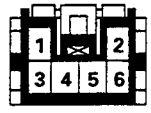
D-3	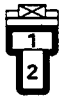	D-13	
D-4		D-14	
D-5	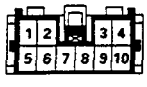	D-15	
D-6		D-16	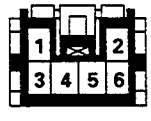
D-7		D-17	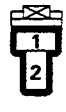
D-8		D-18	
D-9			
D-10	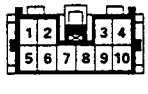		

No.	Connector face	No.	Connector face
E-1	(DIESEL)	E-10	
E-1	(GASOLINE WITH MPI)	E-11	
E-2		E-12	
E-3		E-13	
E-4		E-14	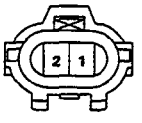
E-5		E-15	
E-6		E-16	
E-7		E-17	NOT USED
E-8		E-18	NOT USED
E-9		E-19	

No.	Connector face	No.	Connector face
E-20 ~ E-35	NOT USED	E-47	NOT USED
E-36		E-48	NOT USED
E-37		E-49	
E-38 ~ E-40	NOT USED	E-50	
E-41	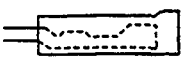		
E-42	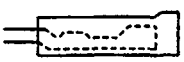		
E-43	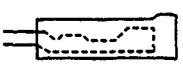		
E-44			
E-45			
E-46			

No.	Connector face	No.	Connector face
F-1			
F-2			
F-3	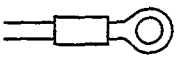		

No.	Connector face	No.	Connector face
H-1		H-8 (LHD)	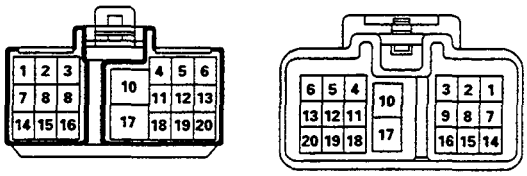
H-2		H-8 (RHD)	
H-3	**NOT USED**	H-9	
H-4	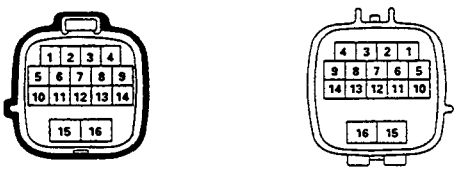	H-10	(WITHOUT POWER WINDOW AND POWER DOOR LOCK)
H-5	(4ZC1 AND 4ZD1)	H-10	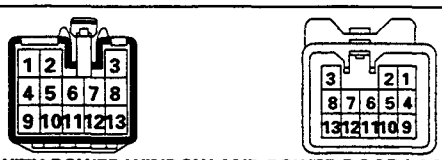 (WITH POWER WINDOW AND POWER DOOR LOCK)
		H-11	
H-5	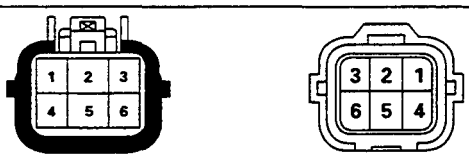 (4ZE1)	H-12	
H-71	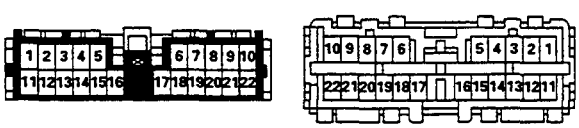	H-13	(WITHOUT POWER WINDOW AND POWER DOOR LOCK)
		H-13	(WITH POWER WINDOW AND POWER DOOR LOCK)
H-7 (RHD)	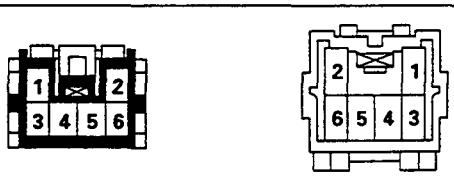	H-14	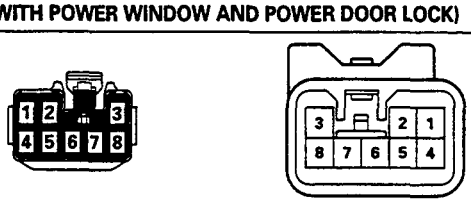

No.	Connector face	No.	Connector face
H-15		H-72	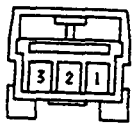
H-16	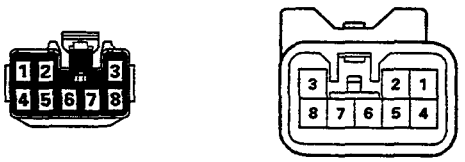	H-53	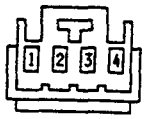
H-17		H-73	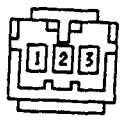
H-18		H-77	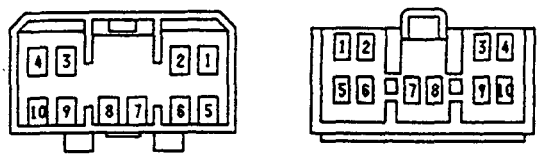
H-19	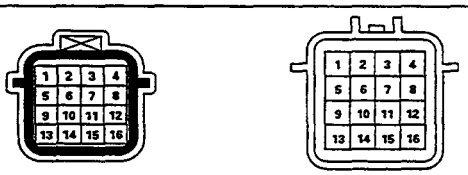	H-76	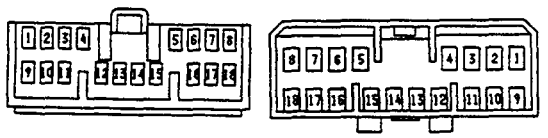
H-20	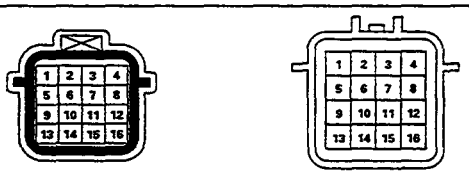	H-31	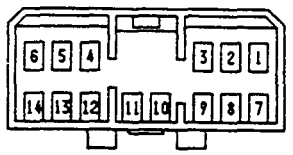
H-21			
H-51	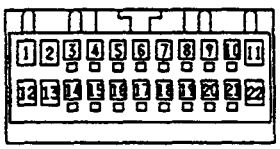		
H-52	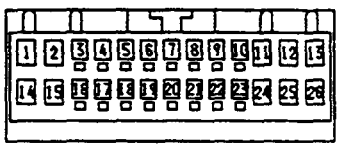		
H-72	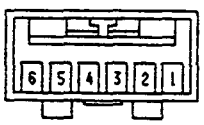		

No.	Connector face	No.	Connector face
L-1			
L-2			
L-3			
L-4			
L-5			
L-6			
L-7			
L-8			
L-9			

No.	Connector face	No.	Connector face
M-1		M-13	
M-2		M-14	
M-3			
M-4			
M-5 ~ M-7	NOT USED		
M-8			
M-9			
M-10			
M-11			
M-12			

No.	Connector face	No.	Connector face
P-1		P-9	NOT USED
P-2		P-10	
P-3	(DIESEL)		
P-3	(GASOLINE)		
P-4	(DIESEL)		
P-4	(GASOLINE)		
P-5			
P-6	NOT USED		
P-7			
P-8	NOT USED		

No.	Connector face	No.	Connector face
R-1	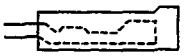		
R-2	NOT USED		
R-3			
R-4			
R-5	NOT USED		
R-6	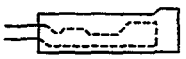		

No.	Connector face	No.	Connector face
T-1	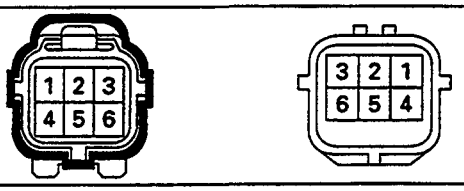		
T-2	NOT USED		
T-3			
T-4	NOT USED		
T-5	NOT USED		
T-6	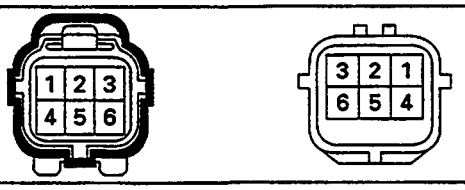		

DELTA OPEL ISUZU SUZUKI

Radio

Driving Lamps

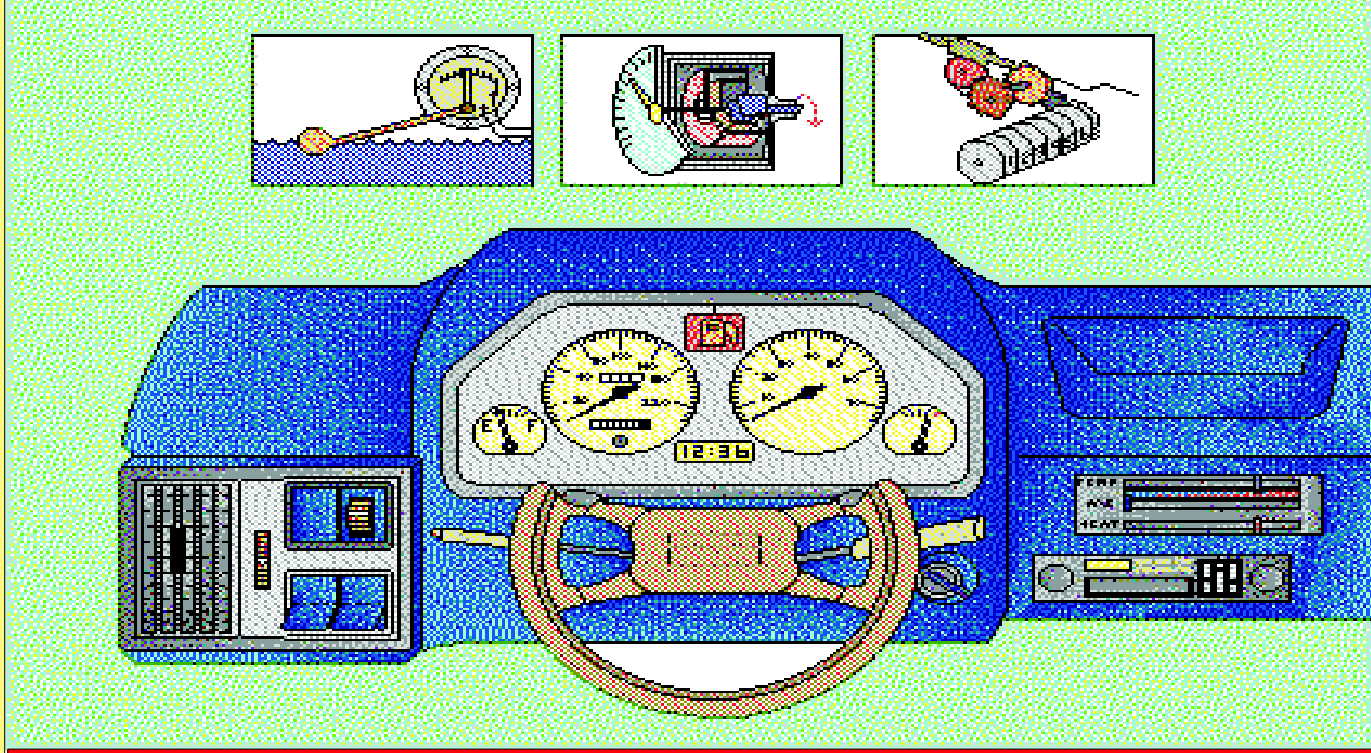

TF 140 Accessories

ISUZU

SECTION 9
ACCESSORIES

TABLE OF CONTENTS

PAGE

Radio . . . . . 9 – 2

Driving Lamps . . . . . 9 – 3

RADIO
4/2 WAY SPEAKER JUMPER

INSTALLATION

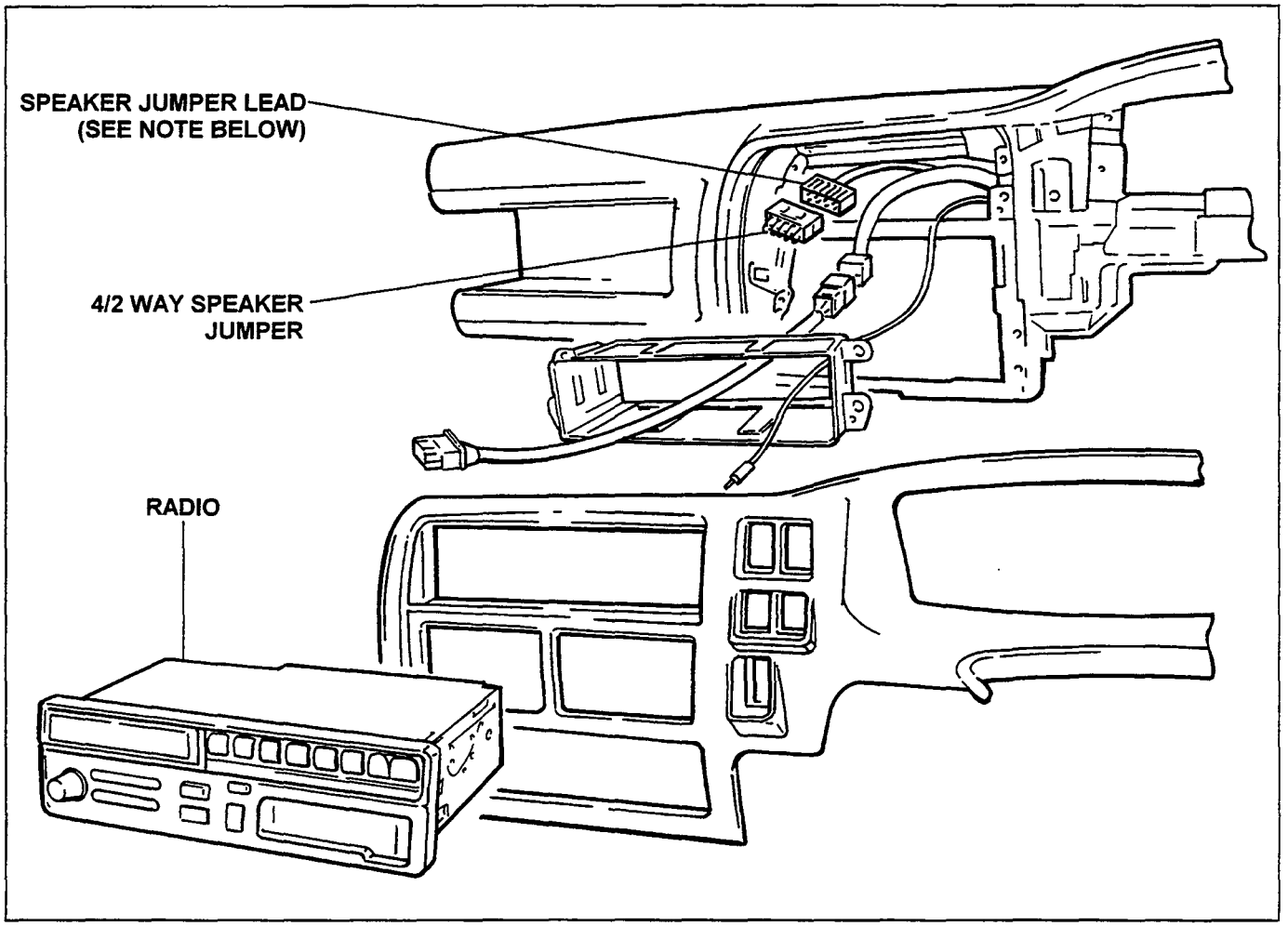

The appropriate speaker jumper (20R 4 way) is to be fitted to the jumper lead for radio aftermarket fitment.

Note* : Jumper fitted to models prior to September 1997.

DRIVING LIGHTS
(Mounted to mini grille guard)

REMOVAL AND INSTALLATION

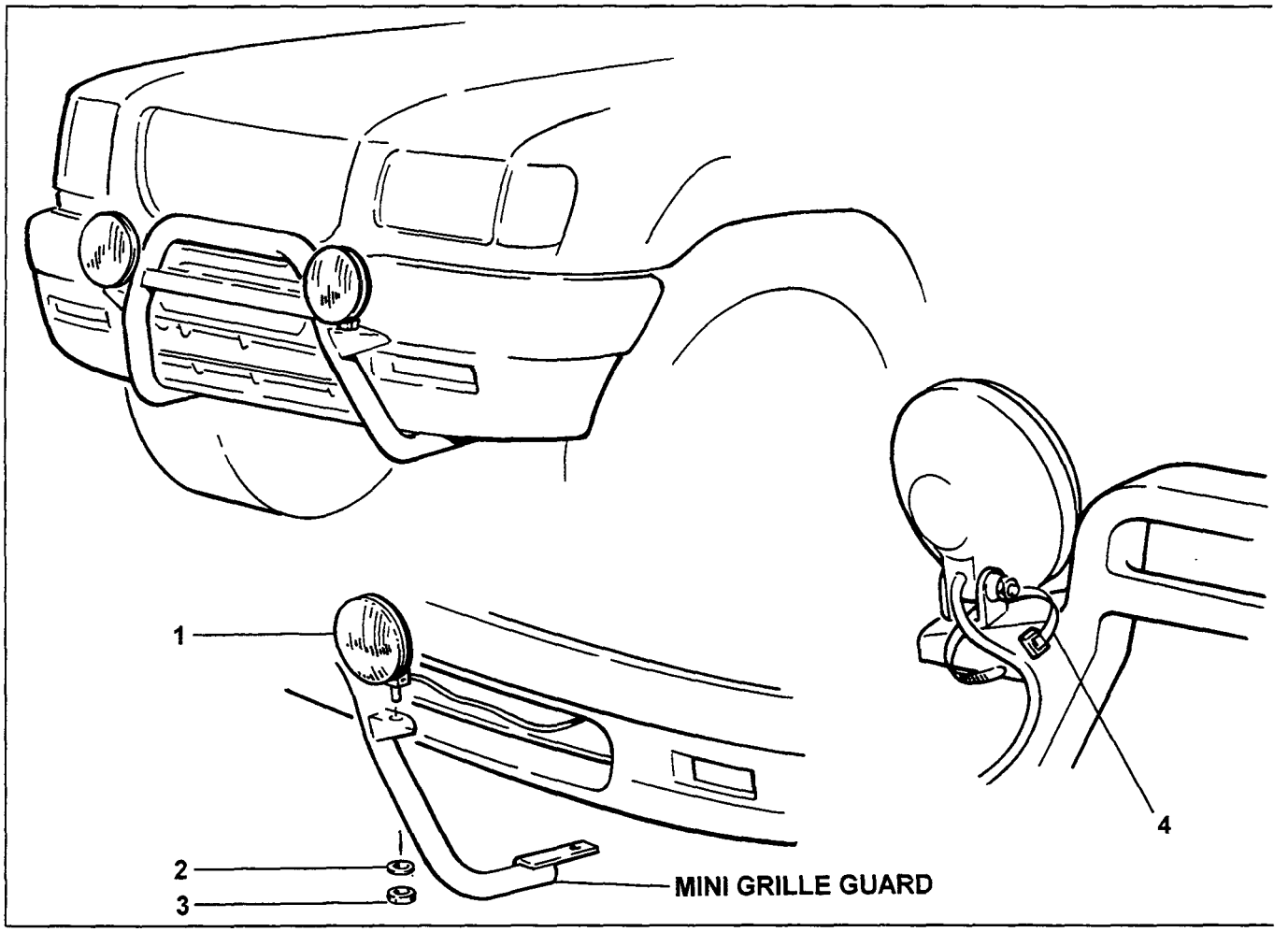

Removal Steps

4. Cable tie
▲ 3. Nut
2. Washer
1. Driving light

Installation Steps

1. Driving light
2. Washer
▲ 3. Nut
4. Cable tie

Note: The cable tie must be fitted after the driving lamps have been focused/adjusted.

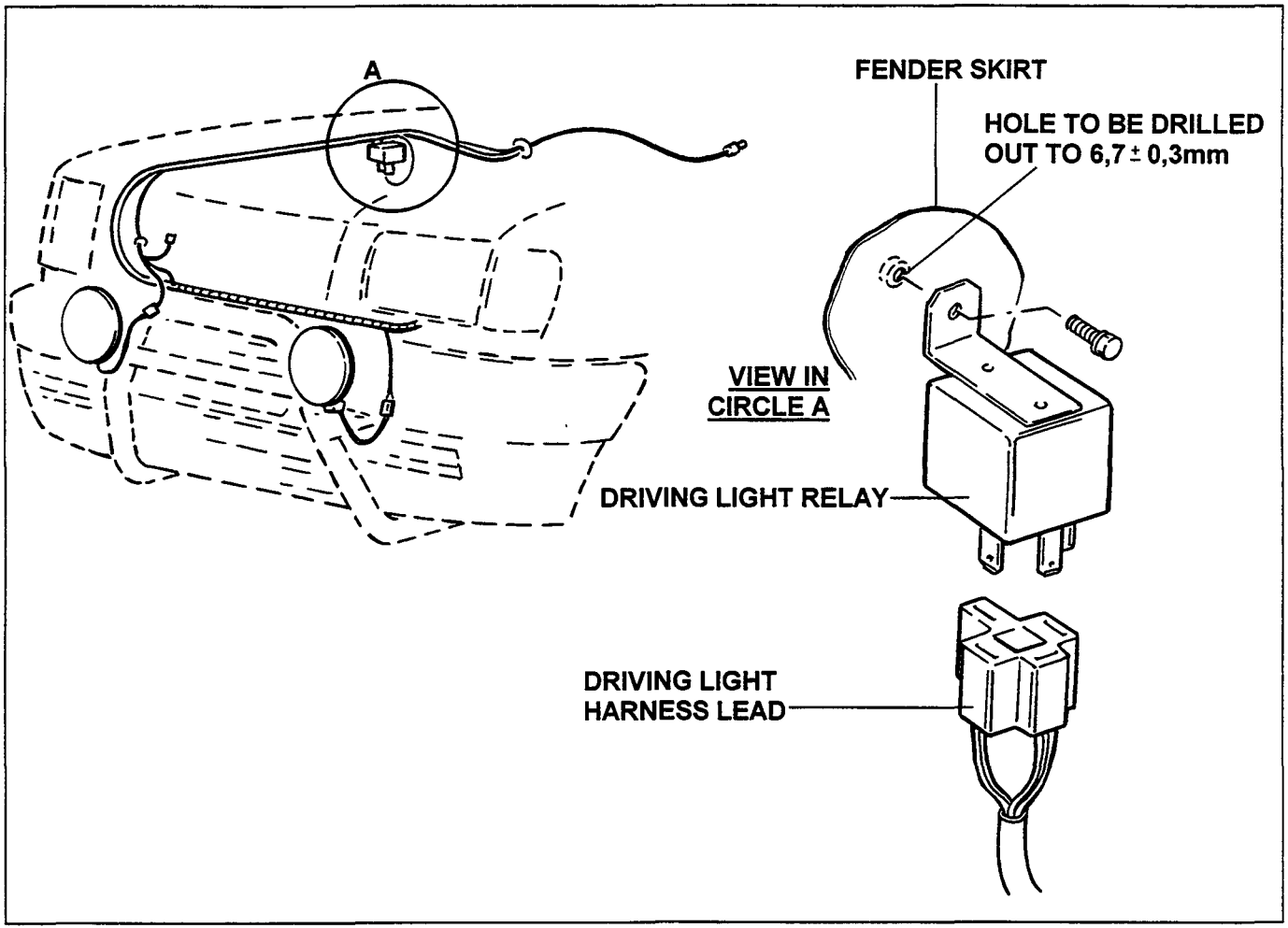

The driving light relay is to be mounted on the fender skirt as shown and the harness lead connected.

DELTA OPEL ISUZU SUZUKI

KB TF 140
Cab

ISUZU

Index
Servicing
Windshied
Doors
Front Seat
Seat Belts

SECTION 10
CAB

TABLE OF CONTENTS

	PAGE
Servicing	10 – 2
Windshield and Back Light Glasses	10 – 3
Sliding Rear Window Assembly	10 – 8
Interior Mirror	10 – 9
Doors	10 – 10
Instrument Panel	10 – 25
Driver's Foot rest	10 – 37
Console Box	10 – 38
Headlining	10 – 39
Front Seat	10 – 42
Front and Rear Seat Belts	10 – 50
Vehicle Security System	10 – 51
Rear Seat Back Rest	10 – 53
Body Side Mouldings	10 – 54
Mud flaps	10 – 55
Roll bar	10 – 57
Grille Guard	10 – 58
Wheel Arch Mouldings	10 – 60
Stone Guard	10 – 61

SERVICING

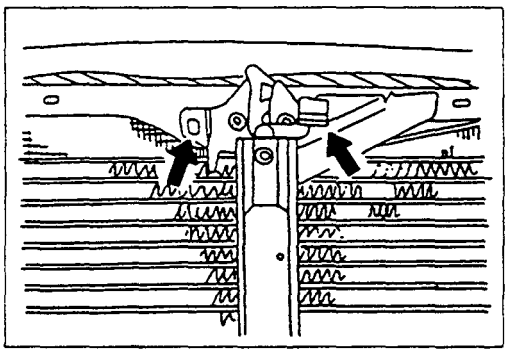

Engine Hood Lock

Align the engine hood lock with the installation holes.

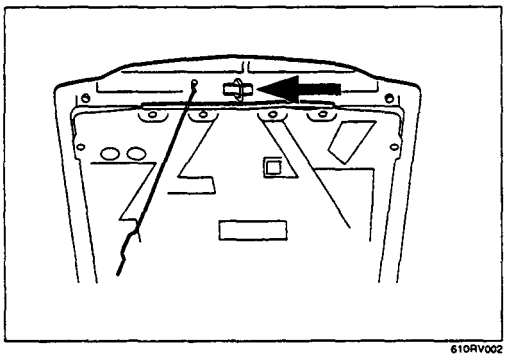

610RV002

Engine Hood Striker

Apply a light coat of grease to the striker.

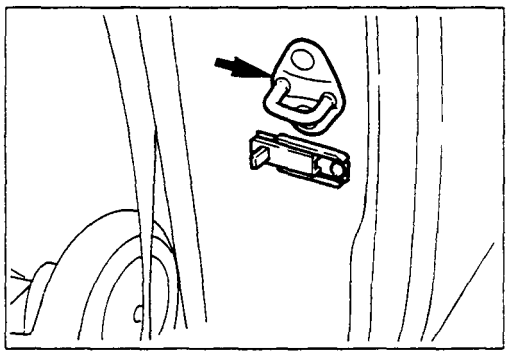

Door Striker

Apply a light coat of grease to the striker.

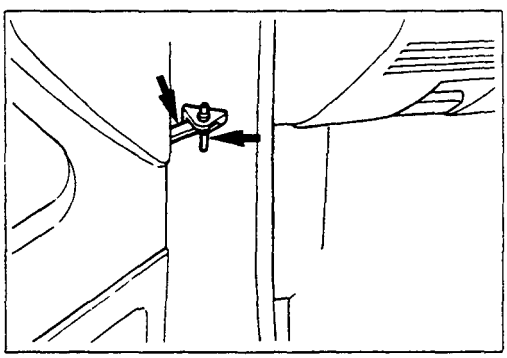

Door Checker Arm and Pin

Apply a light coat of grease to the checker arm and pin.

WINDSHIELD AND BACK LIGHT GLASSES

GENERAL DESCRIPTION

This vehicle uses two types of safety glass: (1) laminated safety plate, for the windshield, and (2) solid tempered safety plate, for the back glass.

The windshield glass is one-piece and is directly retained in the windshield opening by the adhesive.

When replacing a cracked windshield glass, it is very important that the cause of the glass breakage be determined and the condition corrected before a new glass is installed. Otherwise, it is possible that a small obstruction or high spot somewhere around the windshield opening will continue to crack or break the newly installed windshield. This is especially true when the strain on the glass caused by this obstruction is increased by such conditions as wind pressures, extremes of temperature, motion of the vehicle, etc. The procedure for removal of the windshield applies to the complete windshield assembly.

WINDSHIELD GLASS

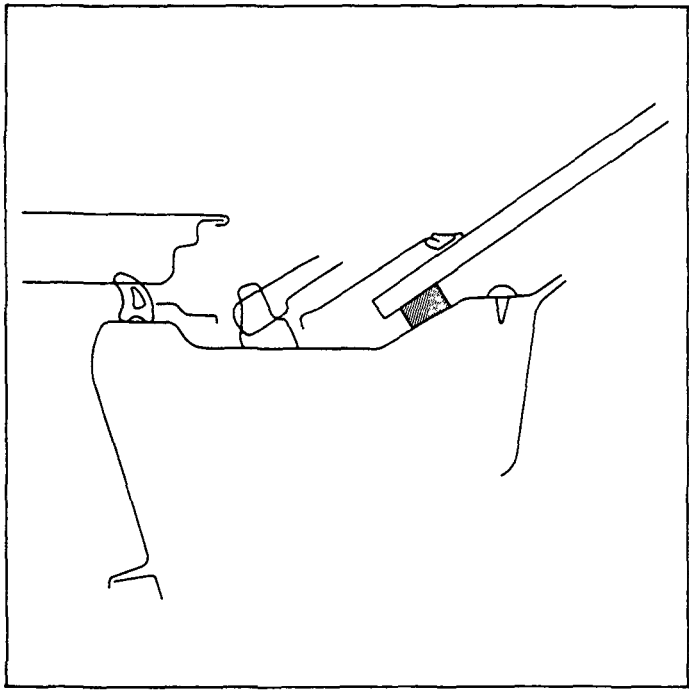

BACK LIGHT GLASS

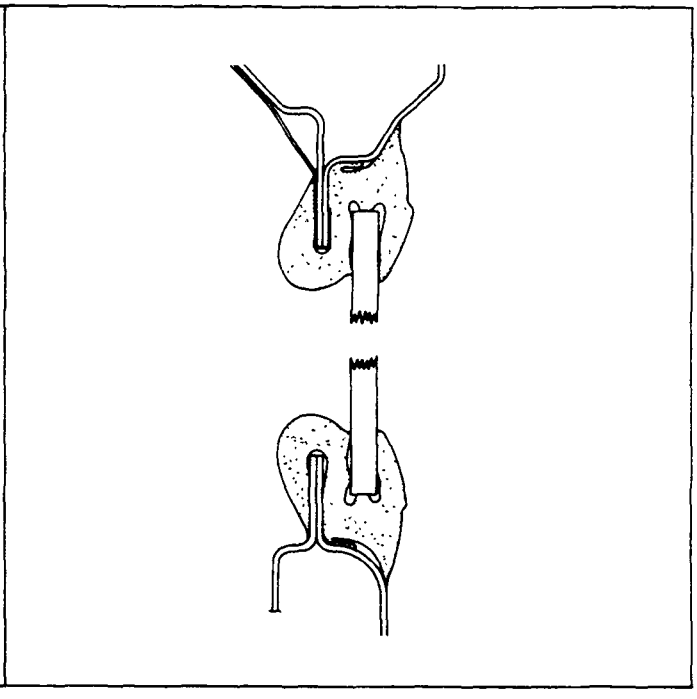

REMOVAL AND INSTALLATION

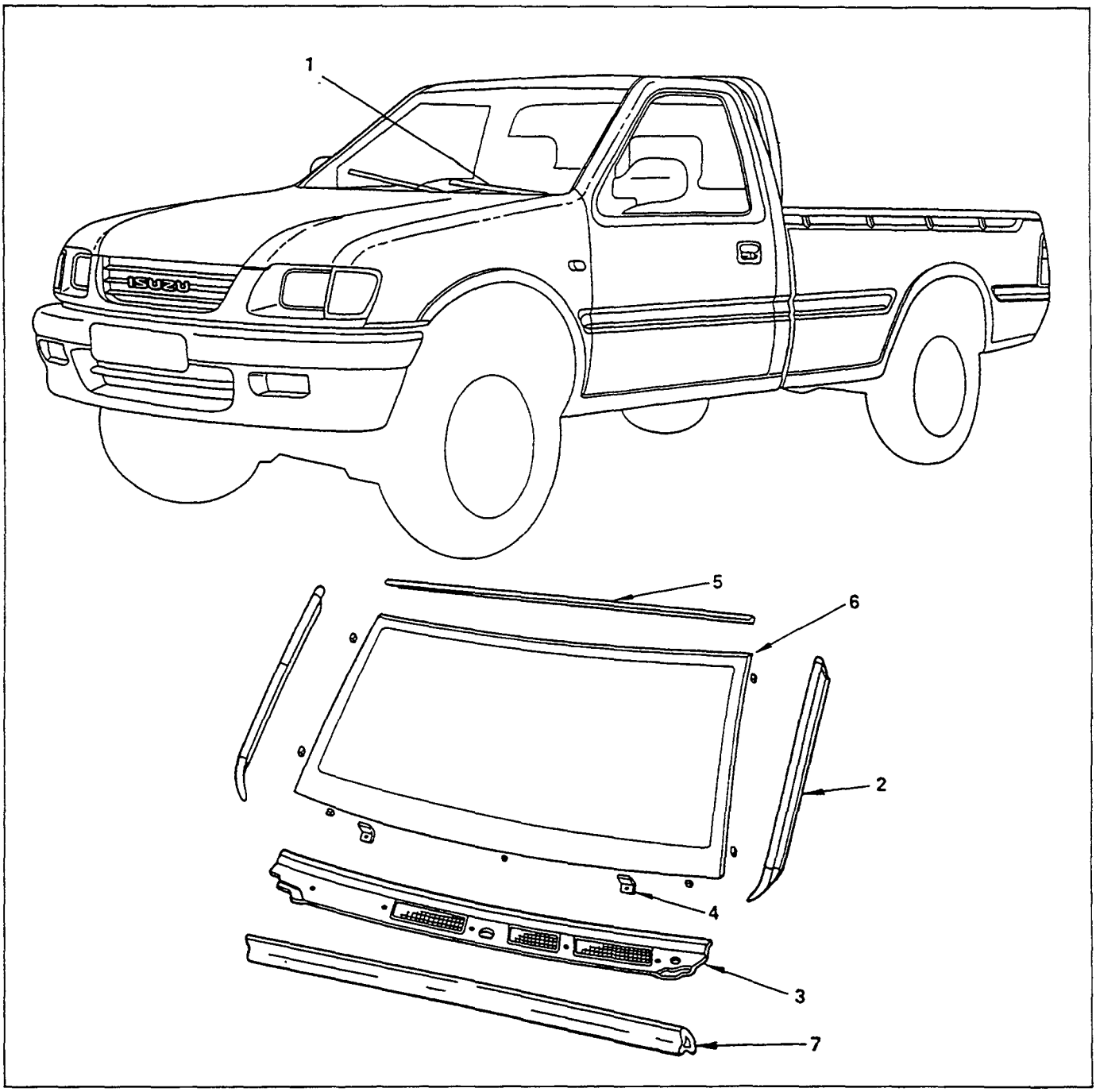

Removal Steps

1. Wiper arm assembly
2. Side moulding
3. Vent cowl cover
4. Windshield stopper
5. Upper moulding
▲ 6. Windshield glass
7. Engine hood rear seal

Installation Steps

▲ 7. Engine hood rear seal
▲ 6. Windshield glass
▲ 5. Upper moulding
▲ 4. Windshield stopper
3. Vent cowl cover
▲ 2. Side moulding
1. Wiper arm assembly

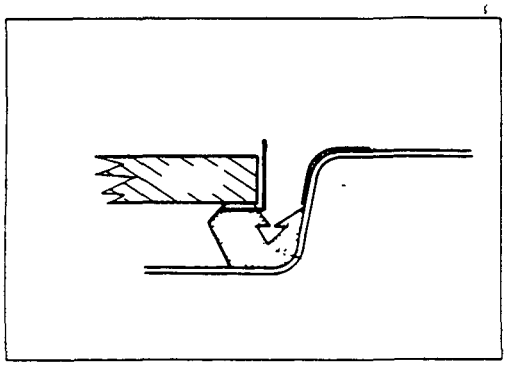

Important Operations — Removal

6. Windshield Glass

Remove the windshield glass, carefully following the steps listed below:

1) Use a knife to cut through part of the adhesive caulking material.
2) Secure one end of a piece of steel piano wire (0.02 inches in diameter) to a piece of wood that can serve as a handle.
3) Use a pair of needle nose pliers to insert the other end of the piano wire through the adhesive caulking material at the edge of the windshield glass.
4) Secure the other end of the piano wire to another piece of wood.

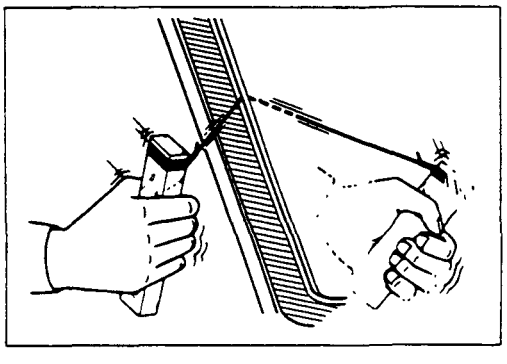

5) With the aid of an assistant, carefully move the piano wire with a sawing motion to cut through the adhesive caulking material around the entire circumferance of the windshield glass.
6) Lift the windshield from the body.
7) Clean any remaining adhesive caulking material from the area of the body which holds the windshield.
8) Use a soft rag and unleaded gasoline to wipe off any adhesive remaining on the windshield glass.

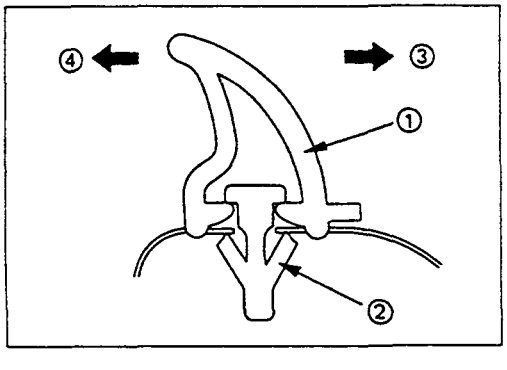

Important Operations — Installation

7. Engine Hood Rear Seal

Install the engine hood rear seal as shown in the illustration.

①: Seal
②: Clip
③: Rear (windshield glass side)
④: Front

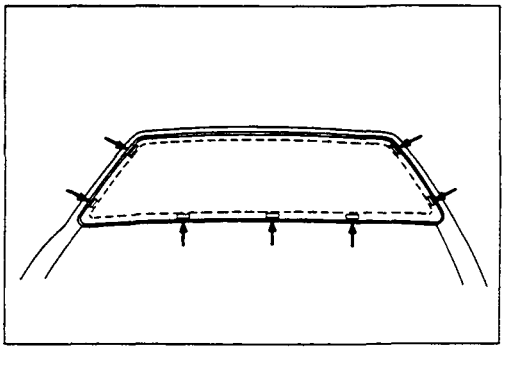

6. Windshield Glass

1) Clean the windshield glass bonding surface.
2) Use a soft rag and unleaded gasoline to wipe off any adhesive remaining on the body.
3) Mount the body window glass as shown in the illustration. Attach spacers at seven (7) locations.

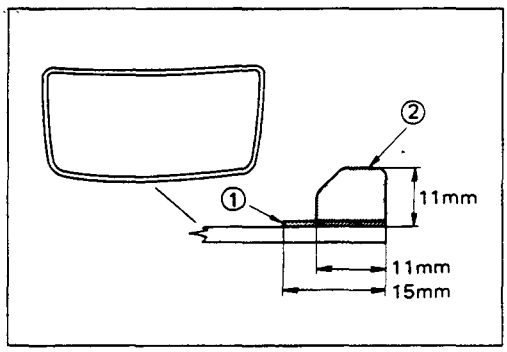

4) Apply primer ① #435-95 or equivalent to the body side bonding surface. The primer should extend 25 mm (1 in.).

Apply primer #435-40 or equivalent to the windshield glass side bonding surface.

The primer should extend 15 mm (0.6 in.) from end of the glass.

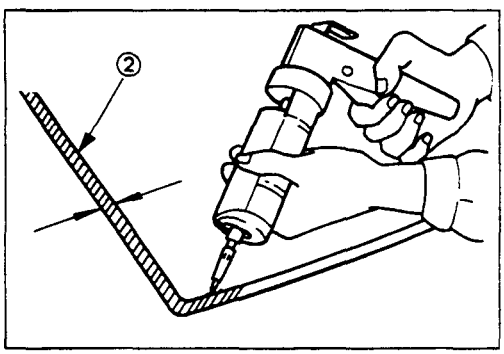

Apply the window glass sealing adhesive ②.

If you are using an air gun, air pressure should be maintained at 147 – 294 kpa.

Note:

Open time (1 min. or more) should be set after application of the primer.
Bonding shall be done within 5 minutes after the sealer has been applied.

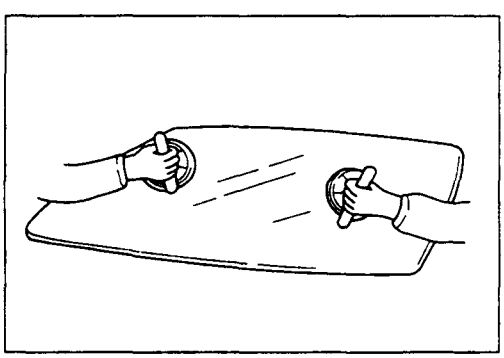

Adjust the setting of the windshield glass with suction discs.

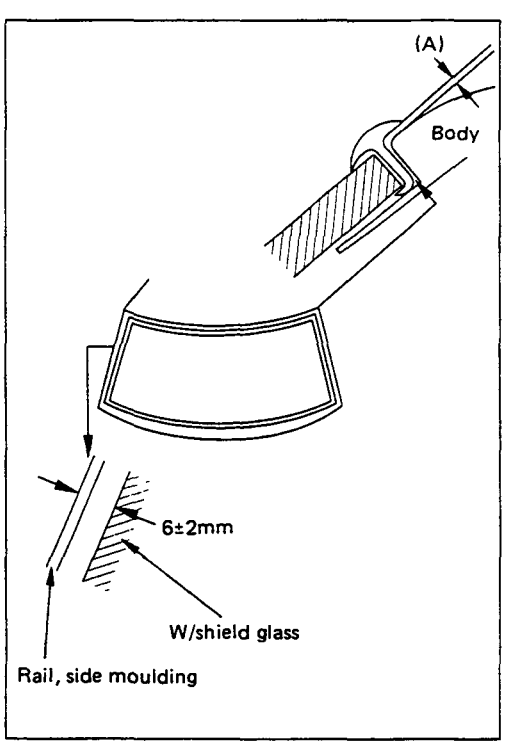

The center of the windshield glass should be in alignment with the center of the windshield glass opening.

The clearance between body and upper moulding should be within 0.5 mm (A).

Both of the clearance for RH and LH should be same. (6 mm ± 2 mm)

Note:

It is a good idea to perform the windshield installation procedure from beginning to end without pausing. If you allow time to elapse between steps, excessive amounts of adhesive may be extruded from around the windshield.

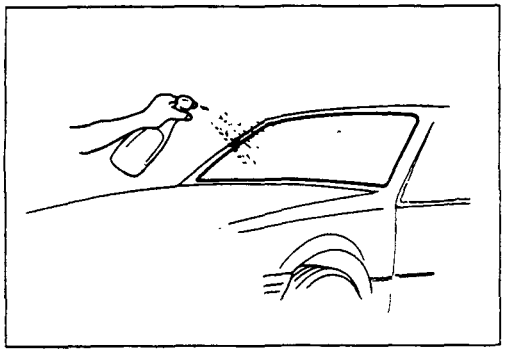

5. Upper Moulding

1) Before installing the windshield moulding (at the upper part of the windshield), spray hot water at a temperature of about 140°F (60°C) onto the windshield glass and the adhesive. This will cause curing.

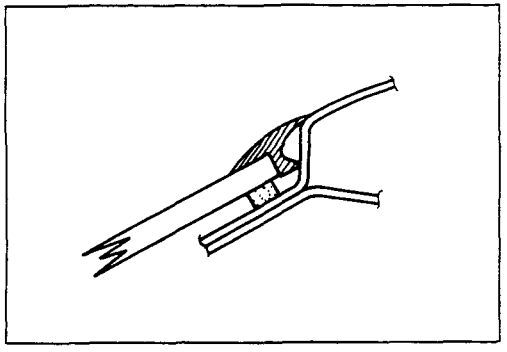

2) Install the upper moulding as soon as hot water has been applied. Using a roller push moulding in until it bottoms.

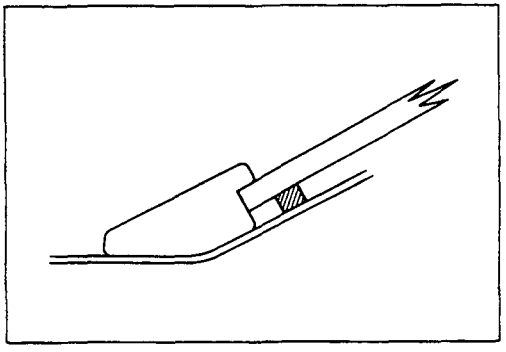

4. Windshield Stopper

Do this immediately after completing the gap adjustment.

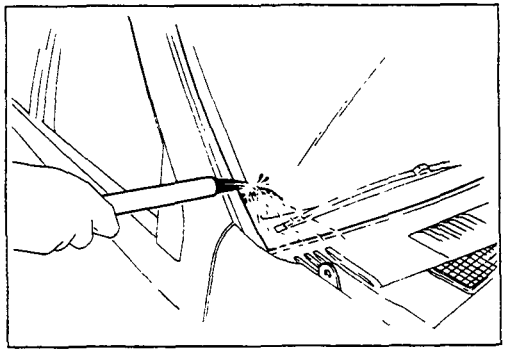

2. Side Moulding

Use unleaded gasoline and a soft cloth to wipe away any excess adhesive.

Cure the bonding at a temperature of 68° — 86°F (20° — 30°C) for twenty-four hours.

Check that the windshield does not leak water.

SLIDING REAR WINDOW

REMOVAL AND INSTALLATION

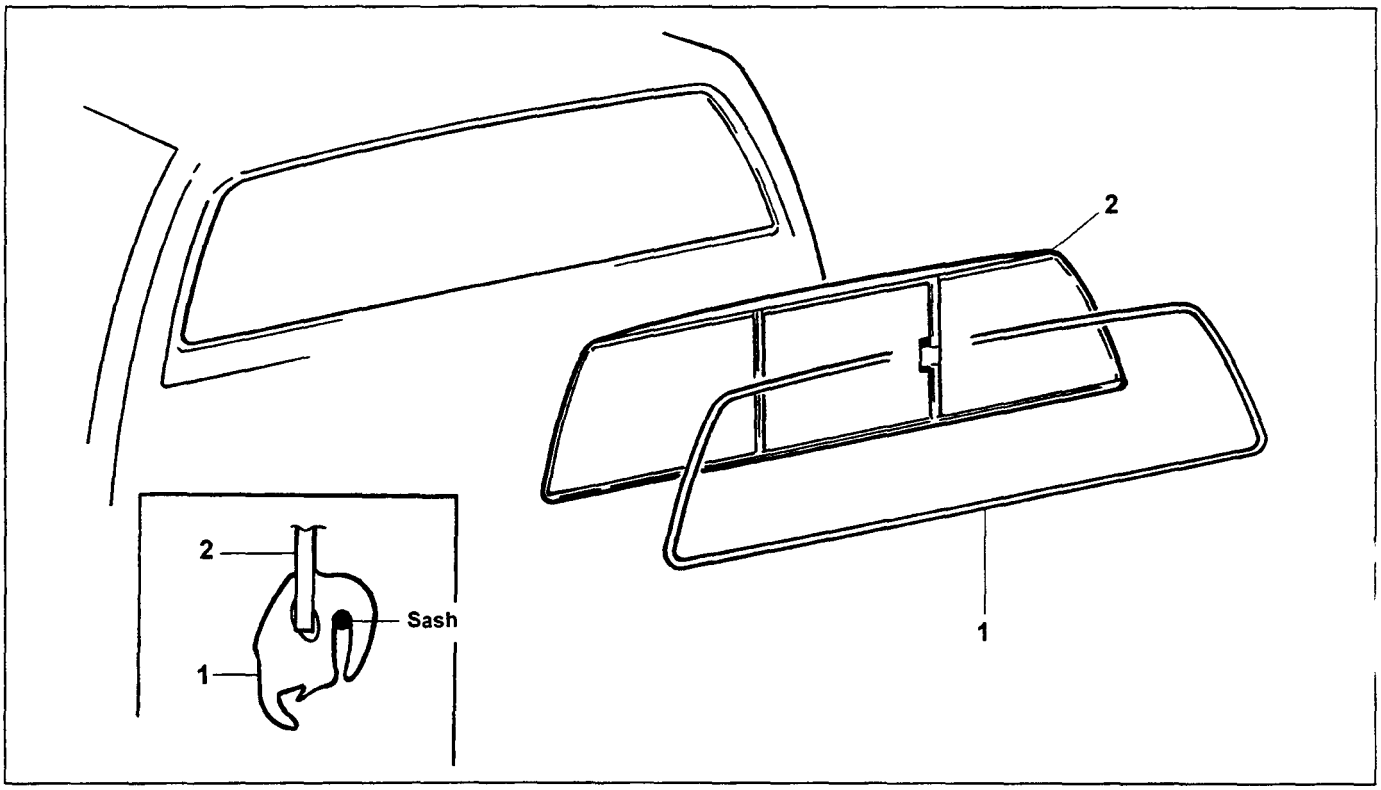

Removal Steps

1. Remove weatherstrip by pushing the lip located on the inside of cab flange opening towards the outside of cab.
2. By using hand pressure push the sliding window assembly towards outside of vehicle.

Installation Steps

1. Assemble weatherstrip (1) to sliding window (2).
2. Fit cord sash as shown in sketch and by pulling the cord towards the inside of the vehicle all round the flange. A second person is to push the assembly inwards.

Note:
A rubber mallet can also be used to tap the assembly into position from the outside. This removal/installation procedure is a two man operation.

INTERIOR MIRROR

REMOVAL AND INSTALLATION

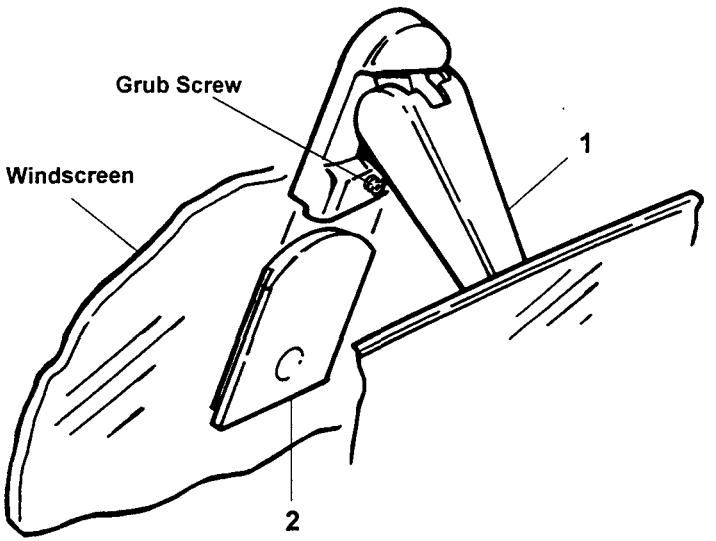

Removal Steps

1. Hold mirror assembly (1) firmly and using a 2 mm Alan key loosen grub screw sufficiently to slide it out from the base plate (2) on the windshield.

Installation Steps

1. Hold mirror assembly firmly and slide into base plate. Using the 2 mm Alan key hand tighten the grub screw to avoid any play in mirror base.

DOORS

GENERAL DESCRIPTION

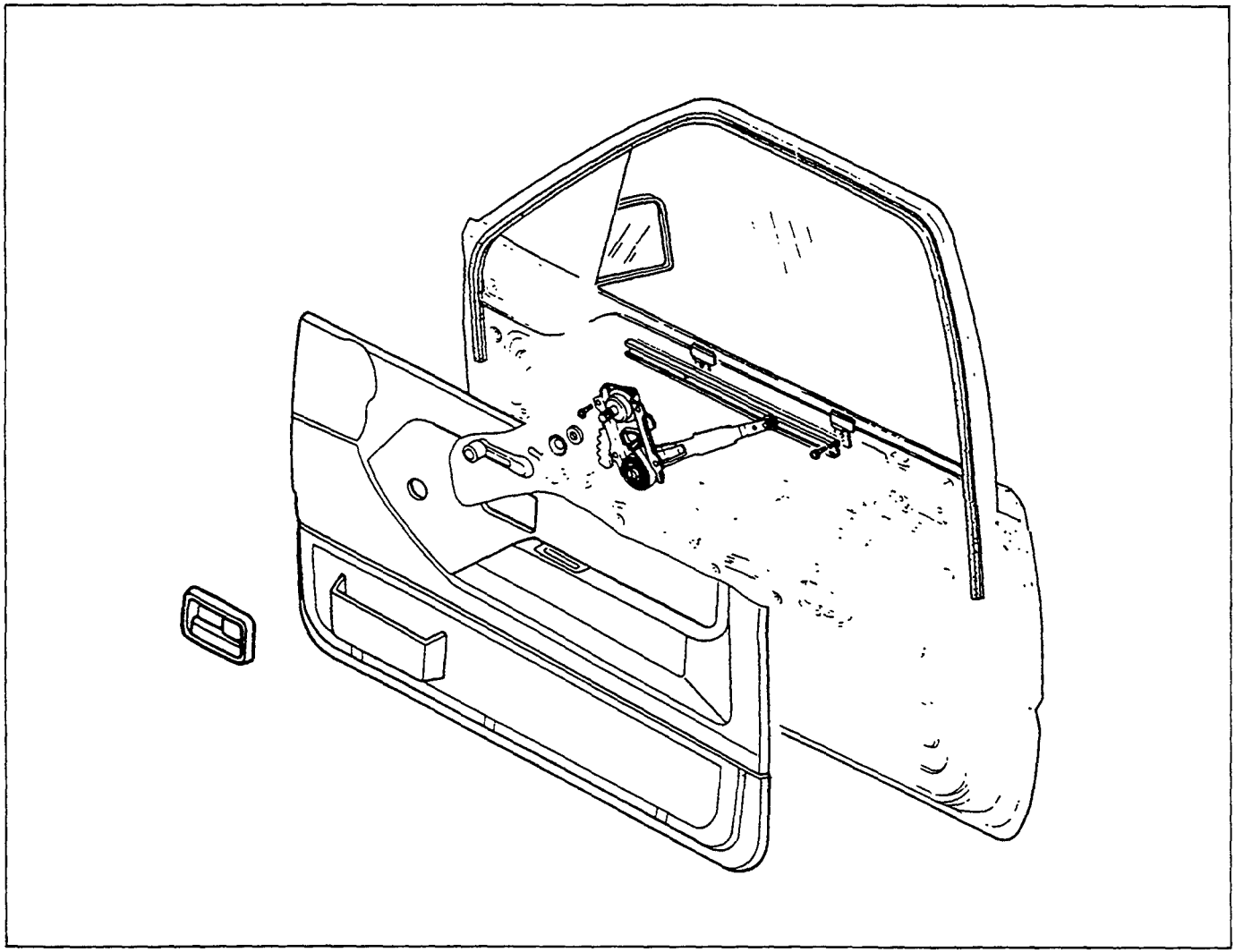

REMOVAL AND INSTALLATION

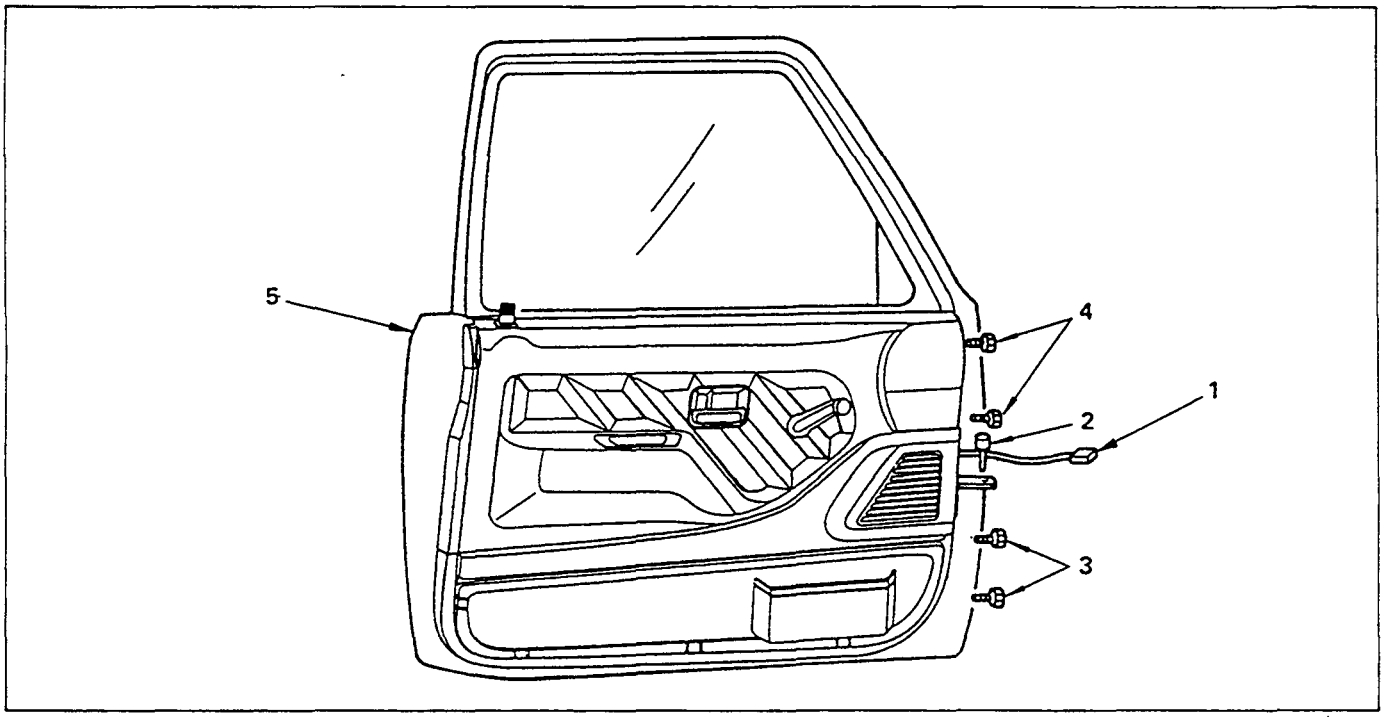

Removal Steps

- ▲ 1. Door harness
- ▲ 2. Checker pin
- ▲ 3. Lower hinge
- 4. Upper hinge
- 5. Door assembly

Installation Steps

5. Door assembly
4. Upper hinge
3. Lower hinge
2. Checker pin
1. Door harness

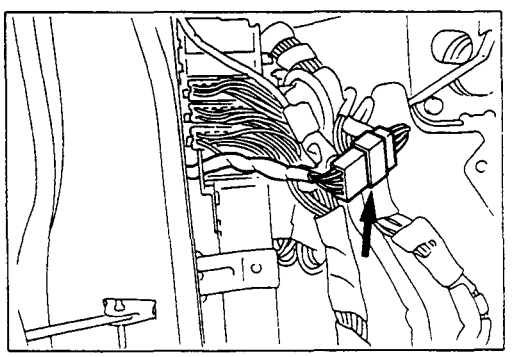

Important Operation — Removal

1. Door Harness

Disconnect the door harness.

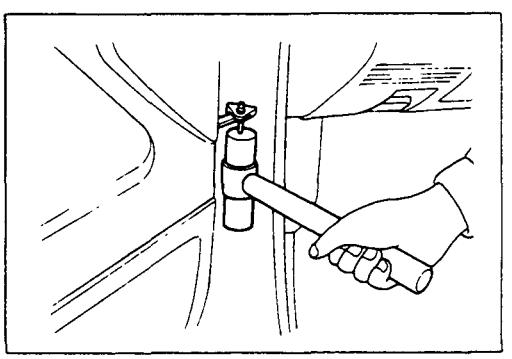

2. Checker Pin

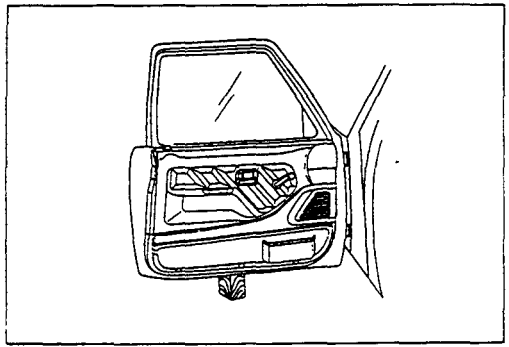

3. Lower Hinge

Position a wood block under the door for protection and support the door assembly with hands at Removal or Installation.

DISASSEMBLY

(Front Door)

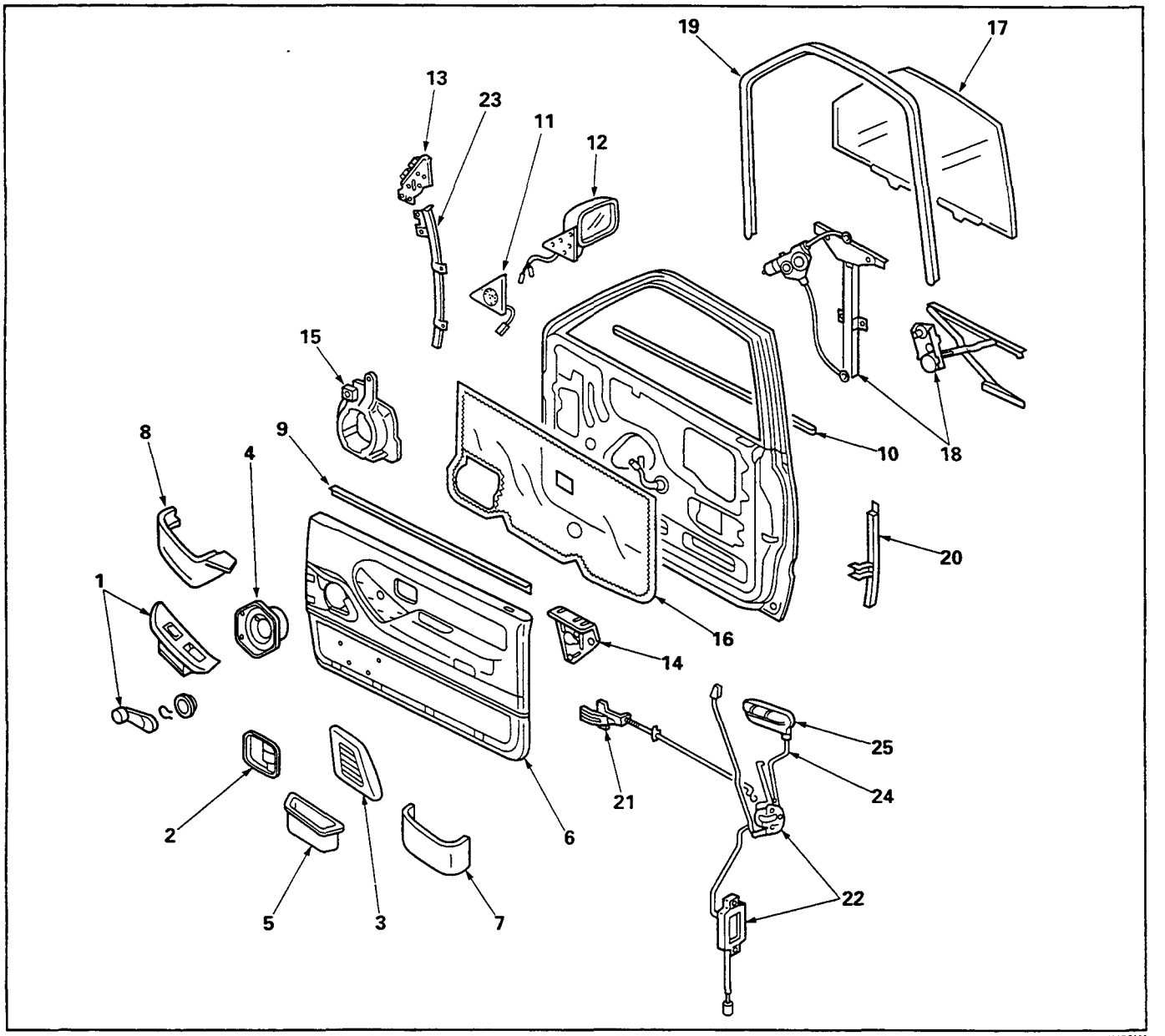

Disassembly Steps

- ▲ 1. Power window switch/Window regulator handle
- ▲ 2. Bezel
- ▲ 3. Speaker grill
- ▲ 4. Speaker assembly
- ▲ 5. Door pull case
- ▲ 6. Door trim pad
- ▲ 7. Door pocket
- ▲ 8. Power window box
- ▲ 9. Inner waste seal
- ▲ 10. Outer waste seal
- ▲ 11. Door mirror cover
- ▲ 12. Door mirror assembly
- ▲ 13. Door mirror bracket
- ▲ 14. Bracket
- ▲ 15. Speaker box
- ▲ 16. Water-proof sheet
- ▲ 17. Window glass
- ▲ 18. Window regulator/Power window motor
- ▲ 19. Glass run
- ▲ 20. Glass run rear channel
- ▲ 21. Inside lever
- ▲ 22. Door lock assembly/Door lock actuator
- ▲ 23. Glass run front channel
- ▲ 24. Door lock cylinder
- ▲ 25. Outside handle

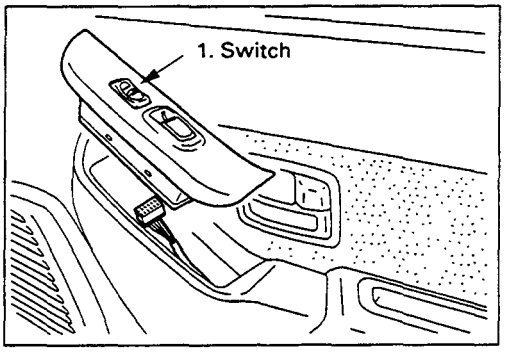

Important Operations

1. **Power Window Switch/Window Regulator Handle**
   - Prise out the power window switch and remove the connectors.

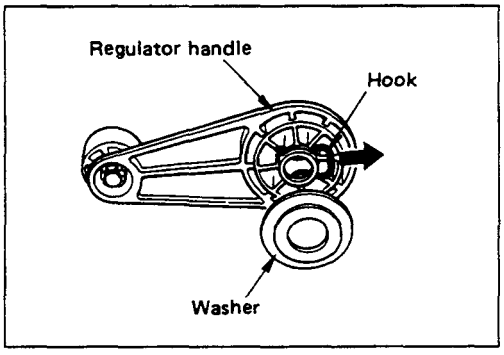

- To remove the regulator handle, remove the clip at the root of the handle by using wire.

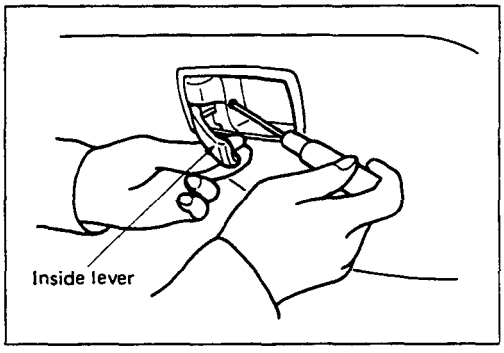

2. **Bezel**
   - Remove the screw while pulling the inside lever toward you.

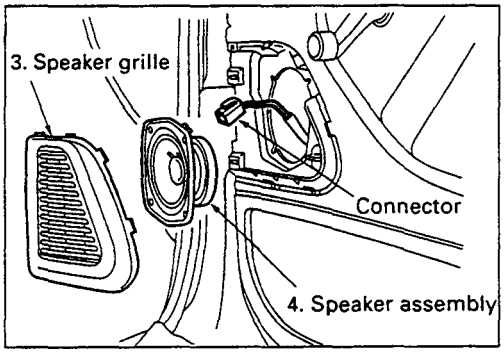

3. **Speaker Grill**
   - Pull out from the front to disengage the clips.
4. **Speaker Assembly**
   - Remove 4 screws and disconnect the speaker harness connector.

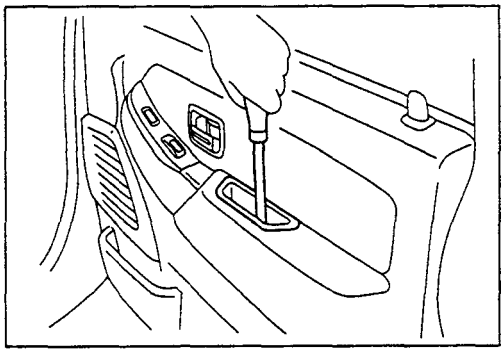

5. **Door Pull Case**
   - Remove the screw at the bottom of the case.

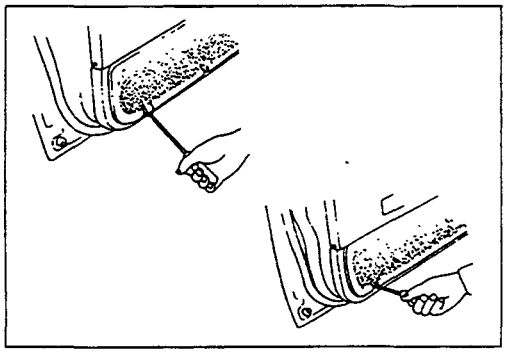

6. **Door Trim Pad**
   - Remove the cover bottom of the trim pad (4 pcs.), then remove the screws.
7. **Door Pocket**
8. **Power Window Box**
9. **Inner Waste Seal**
10. **Outer Waste Seal**

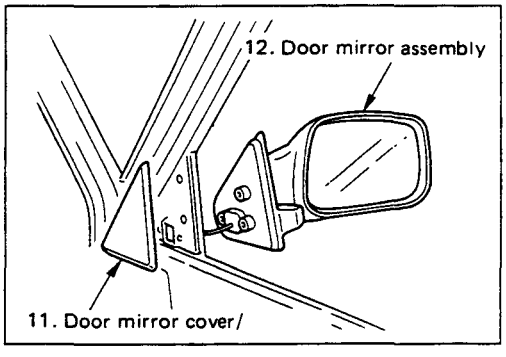

11. **Door Mirror Cover**
   - Pull out the upper clip, and then take out the catch at the lower section.
12. **Door Mirror Assembly**
   - Remove 3 fixing bolts and then remove the connector.
13. **Door Mirror Bracket**
   - Remove 2 bolts at the lower section, and then remove 2 screws in the weather strip.
14. **Bracket**
15. **Speaker Box Spacer**
   - Remove 3 fixing bolts.
16. **Water Proof Sheet**
   - Take care not to damage the sheet when peeling if off.

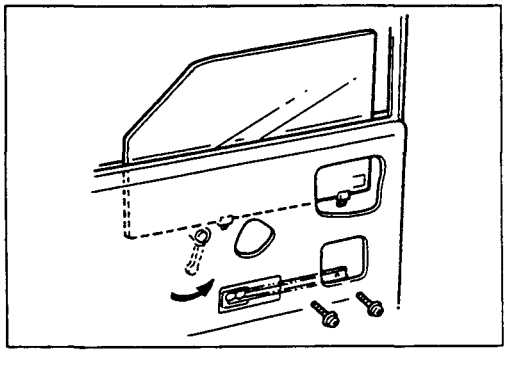

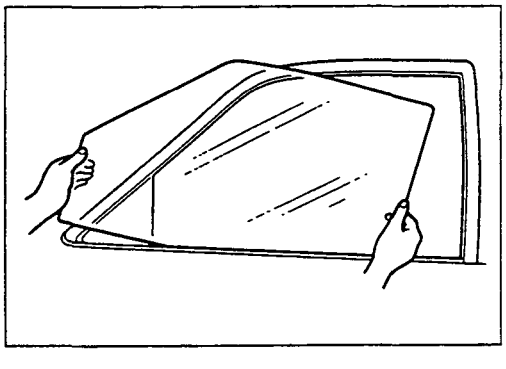

17. **Window Glass**
   - Remove 2 screws through the access hole and pull out the window glass upward.
18. **Window Regulator/Power Window Motor**
   - Disconnect the power window motor connector.
19. **Glass Run**
   - Pull it out of the door piller of the channel (front/rear).
20. **Glass Run Rear Channel**
   - Remove 2 screws.
21. **Inside Lever**

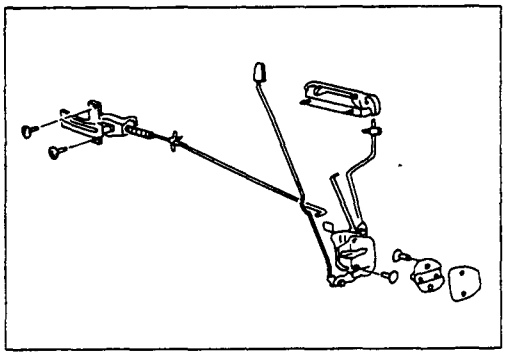

22. **Door Lock Assembly/Door Lock Actuator**
    - Disconnect the linkage with the outside handle, the inside lever and the lock cylinder.
23. **Glass Run Front Channel**

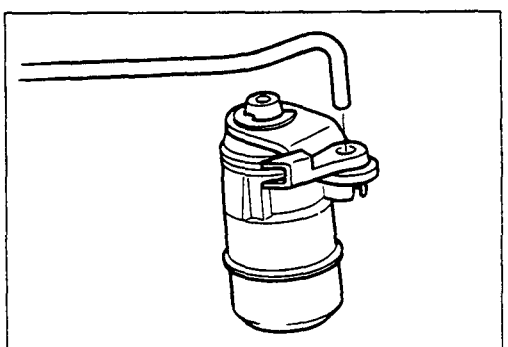

24. **Door Lock Cylinder**
    - Remove the door lock cylinder by applying finger pressure from inside while depressing the retaining clip.
25. **Outside Handle**

DISASSEMBLY

(Rear Door)

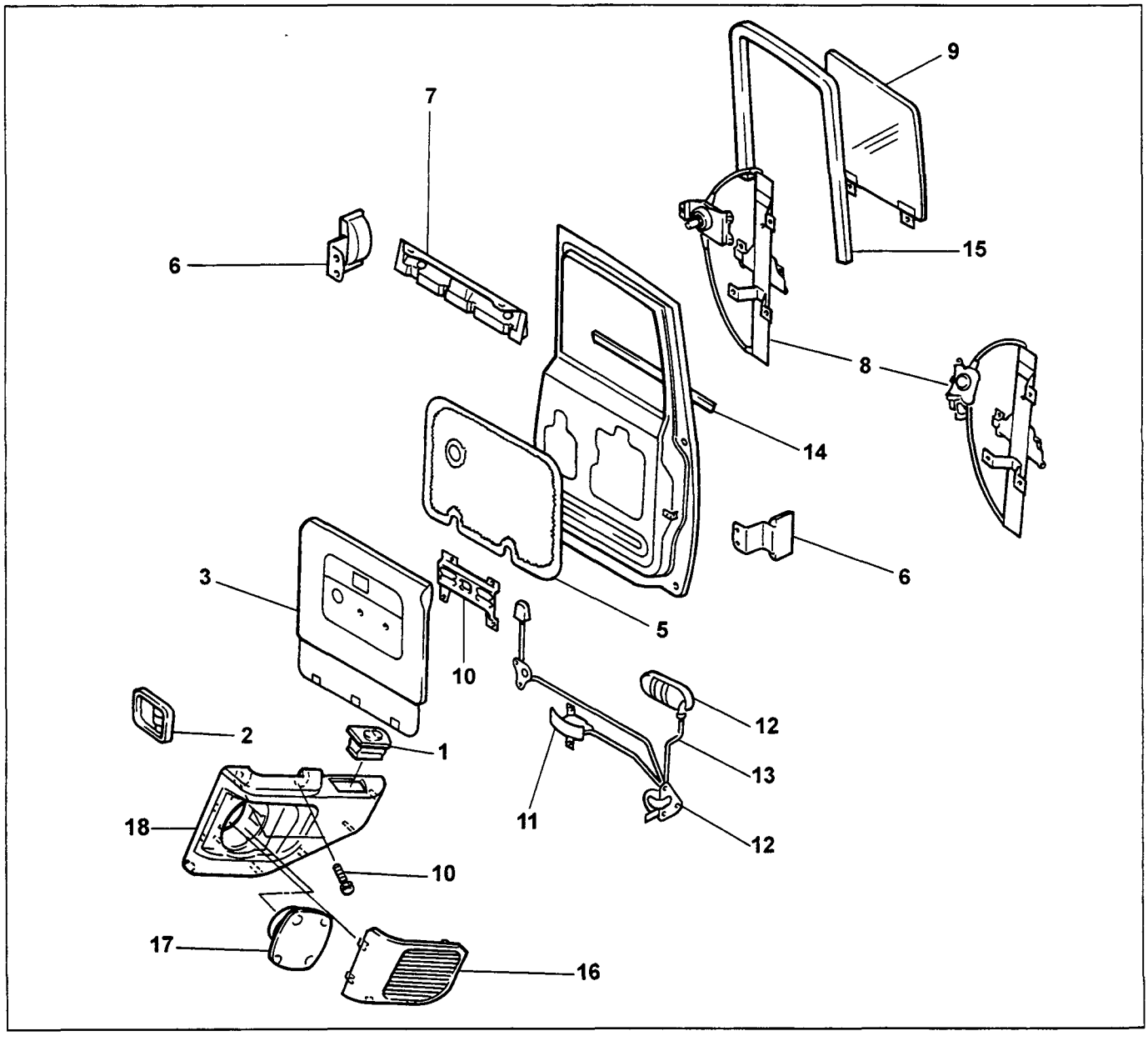

Disassembly Steps

- ▲ 1. Power window switch/window regulator handle
- ▲ 2. Bezel
- 3. Cover, lower plate fixed
- ▲ 4. Door trim pad
- 5. Water proof sheet
- 6. Glass guide
- 7. Upper cover
- ▲ 8. Window regulator/power window motor
- ▲ 9. Window glass
- 10. Bracket
- 11. Inside lever
- 12. Outside handle
- ▲ 13. Door lock cylinder
- 14. Outer waste seal
- 15. Glass run
- 16. Speaker Grille
- 17. Speaker
- 18. Arm rest assembly

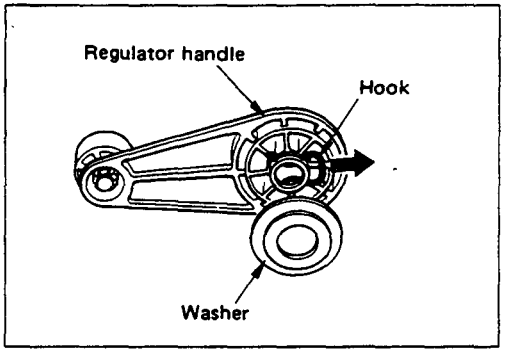

Important Operations

1. **Window Regulator Handle**
   - To remove the regulator handle, remove the clip at the root of the handle by using wire.

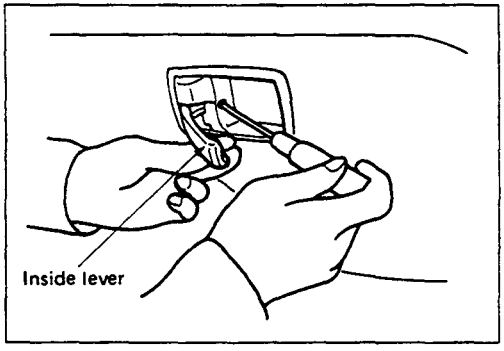

2. **Bezel**
   - Remove the screw while pulling the inside lever toward you.

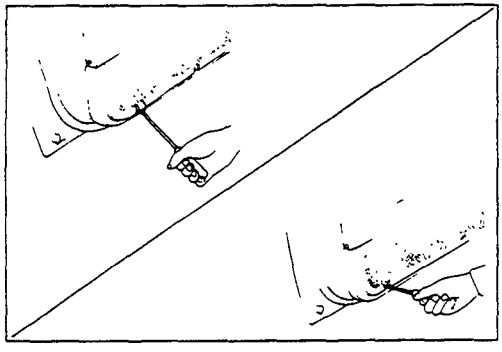

4. **Door Trim Pad**
   - Remove the cover bottom of the trim pad (3 pcs), then remove the screws.

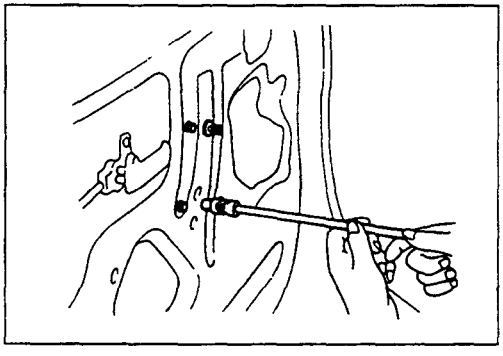

8. **Window Regulator**
   - Remove the 4 screws holding the regulator.

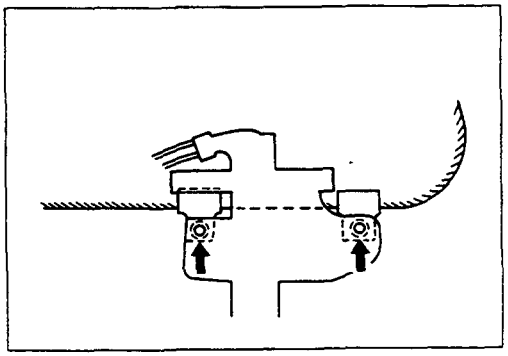

9. Window Glass

- First, align the height of regulator to the access hole. Remove 2 screws attaching bottom channel and regulator, then remove the glass.

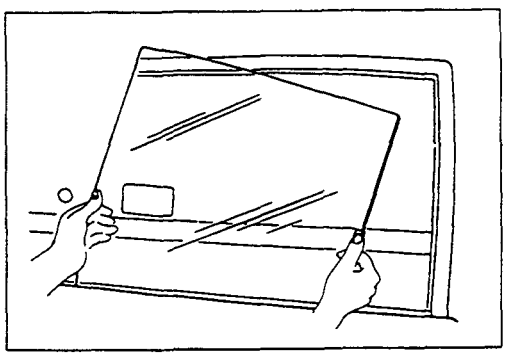

- Remove the window glass by tilting it as necessary.

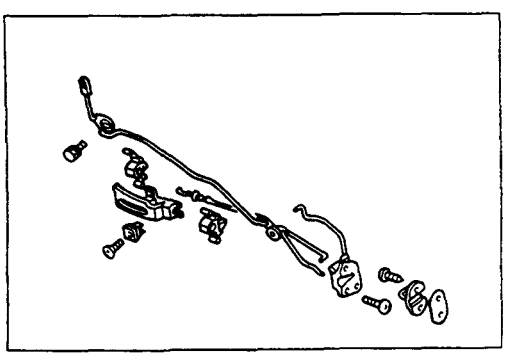

13. Door Lock Assembly

- Disconnect the linkage from the door outside handle, inside lever and lock cylinder.

  Remove the 2 bolts holding the outside handle from inner side.

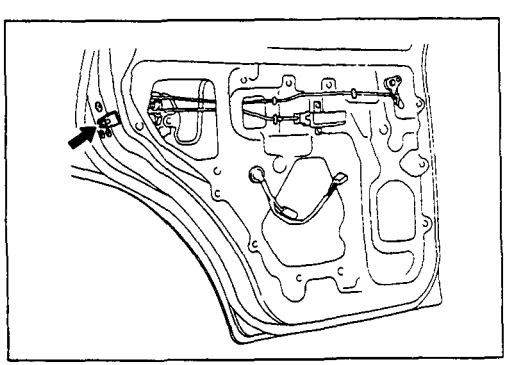

- Remove the 3 bolts holding the door lock assembly.

ADJUSTMENT (FRONT AND REAR)

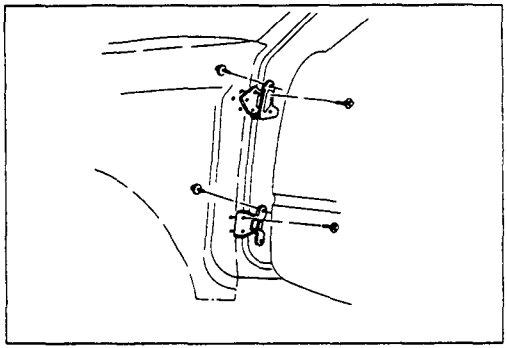

Door Hinge

Door alignment can be obtained by moving door hinges. Prior to adjustment, remove the fender and set the door temporarily.
Loosen hinge to door bolts when adjusting steps between the door and body.
Loosen hinge to body bolts to adjust the clearance between the door and body.

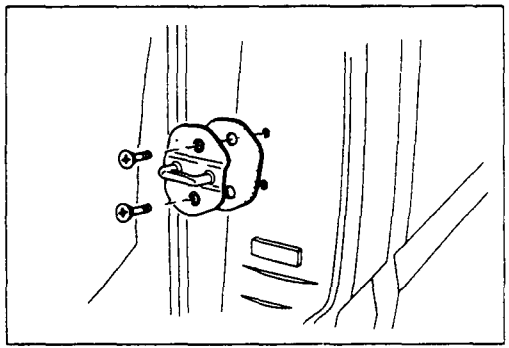

Door Striker

Loosen the striker screws and adjust the position of the striker by holding a piece of wood against the striker and tapping it with a hammer.
To obtain correct adjustment, move the position of the striker vertically so that the lower face of the dovetail becomes parallel to the striker.
Adjust the number of sheets to control engagement of the striker with the door latch. One or two sheets are generally used to obtain correct adjustment.

REASSEMBLY

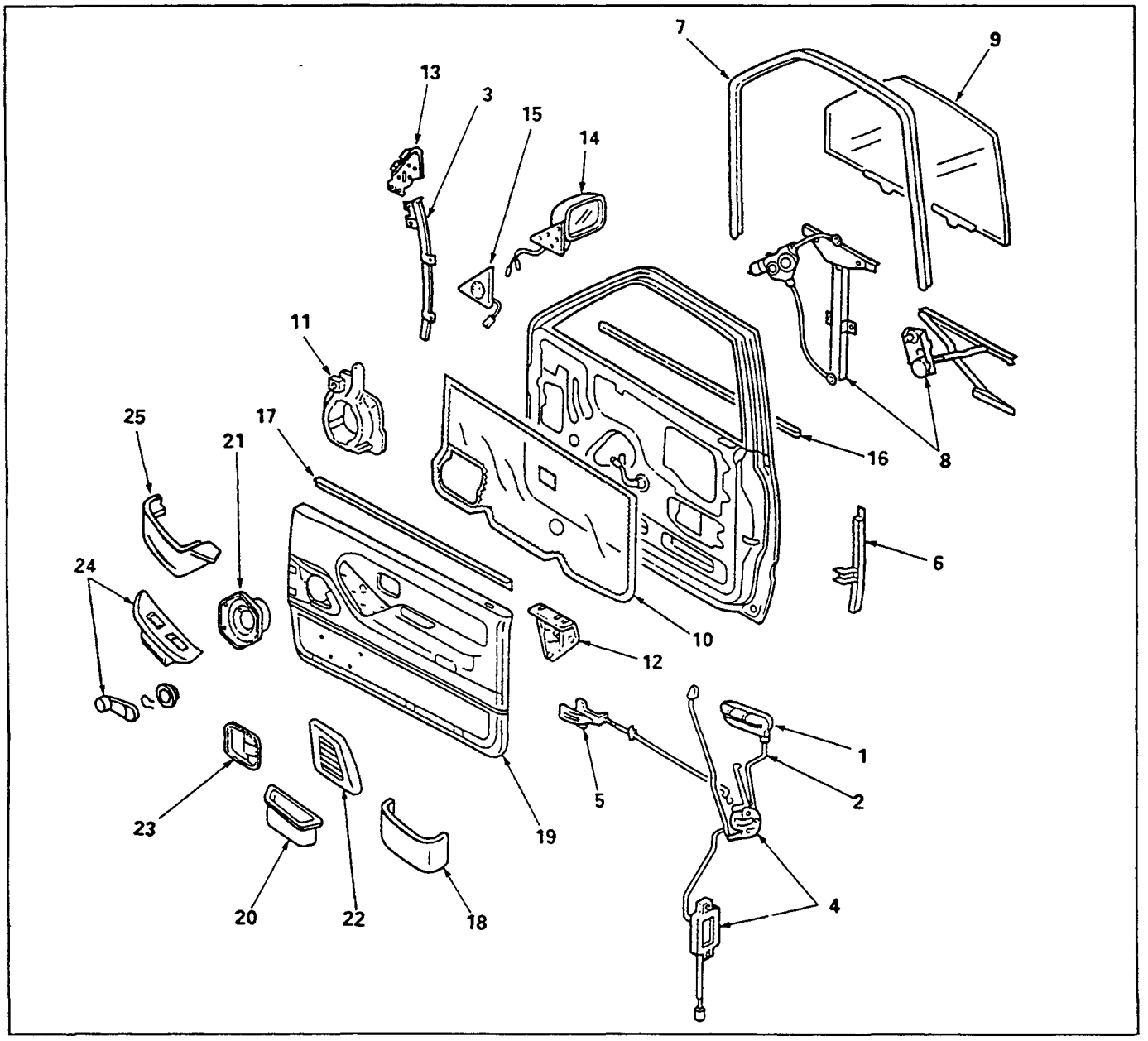

Reassembly Steps

1. Outside handle
2. Door lock cylinder
3. Glass run front channel
4. Door lock assembly/Door lock actuator
5. Inside lever
6. Glass run rear channel
7. Glass run
8. Window regulator/Power window motor
▲ 9. Window glass
▲ 10. Water proof sheet
11. Speaker box spacer
12. Bracket
13. Door mirror bracket
14. Door mirror assembly
15. Door mirror cover
16. Outer waste seal
17. Inner waste seal
18. Door pocket
19. Door trim pad
20. Door pull case
21. Speaker assembly
22. Speaker grille
23. Bezel
▲ 24. Power window switch/Window regulator handle
25. Power window box

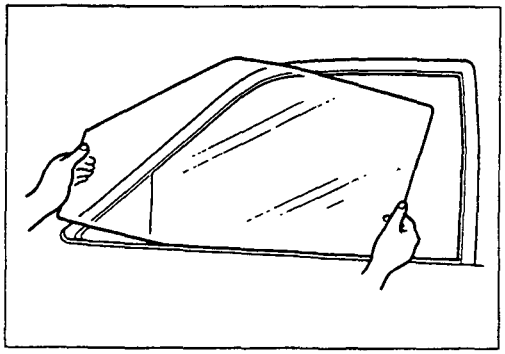

Important Operations

9. Window Glass

- Insert the window glass into position by tilting it as necessay, then set it against the channel of the window regulator.

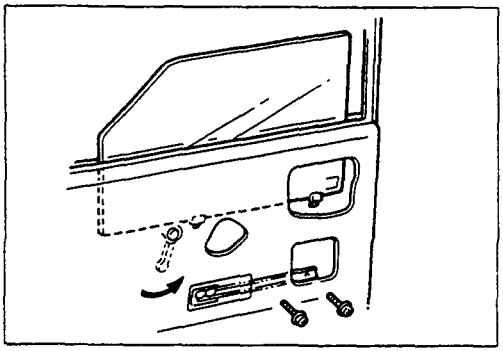

- Attach the window glass to the window regulator with the two screws.

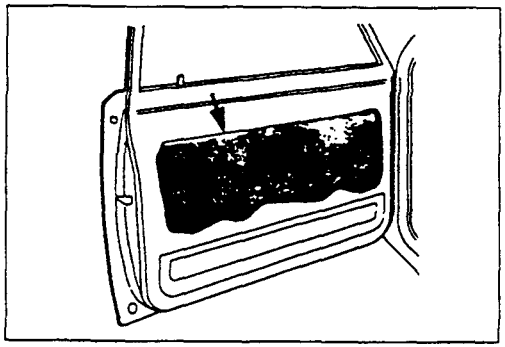

10. Water Proof Sheet

- Place the butyl tape on the door panel so as not to cover the drain hole.

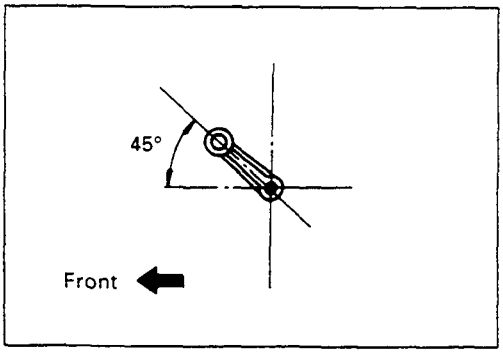

24. Regulator Handle

- Install the regulator handle as illustrated when closing the window glass.

ADJUSTMENT (FRONT AND REAR)

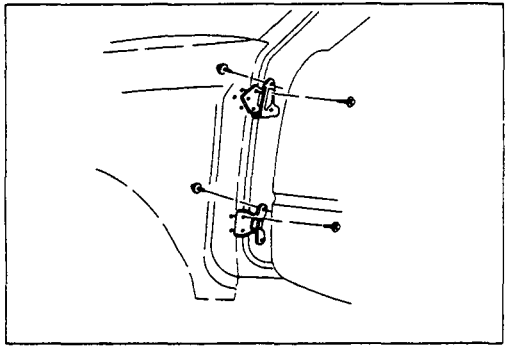

Door Hinge

Door alignment can be obtained by moving door hinges. Prior to adjustment, remove the fender and set the door temporarily.
Loosen hinge to door bolts when adjusting steps between the door and body.
Loosen hinge to body bolts to adjust the clearance between the door and body.

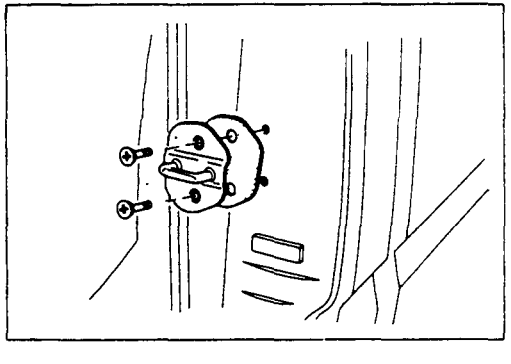

Door Striker

Loosen the striker screws and adjust the position of the striker by holding a piece of wood against the striker and tapping it with a hammer.
To obtain correct adjustment, move the position of the striker vertically so that the lower face of the dovetail becomes parallel to the striker.
Adjust the number of sheets to control engagement of the striker with the door latch. One or two sheets are generally used to obtain correct adjustment.

BRACKET ANTI-THEFT

REMOVAL AND INSTALLATION

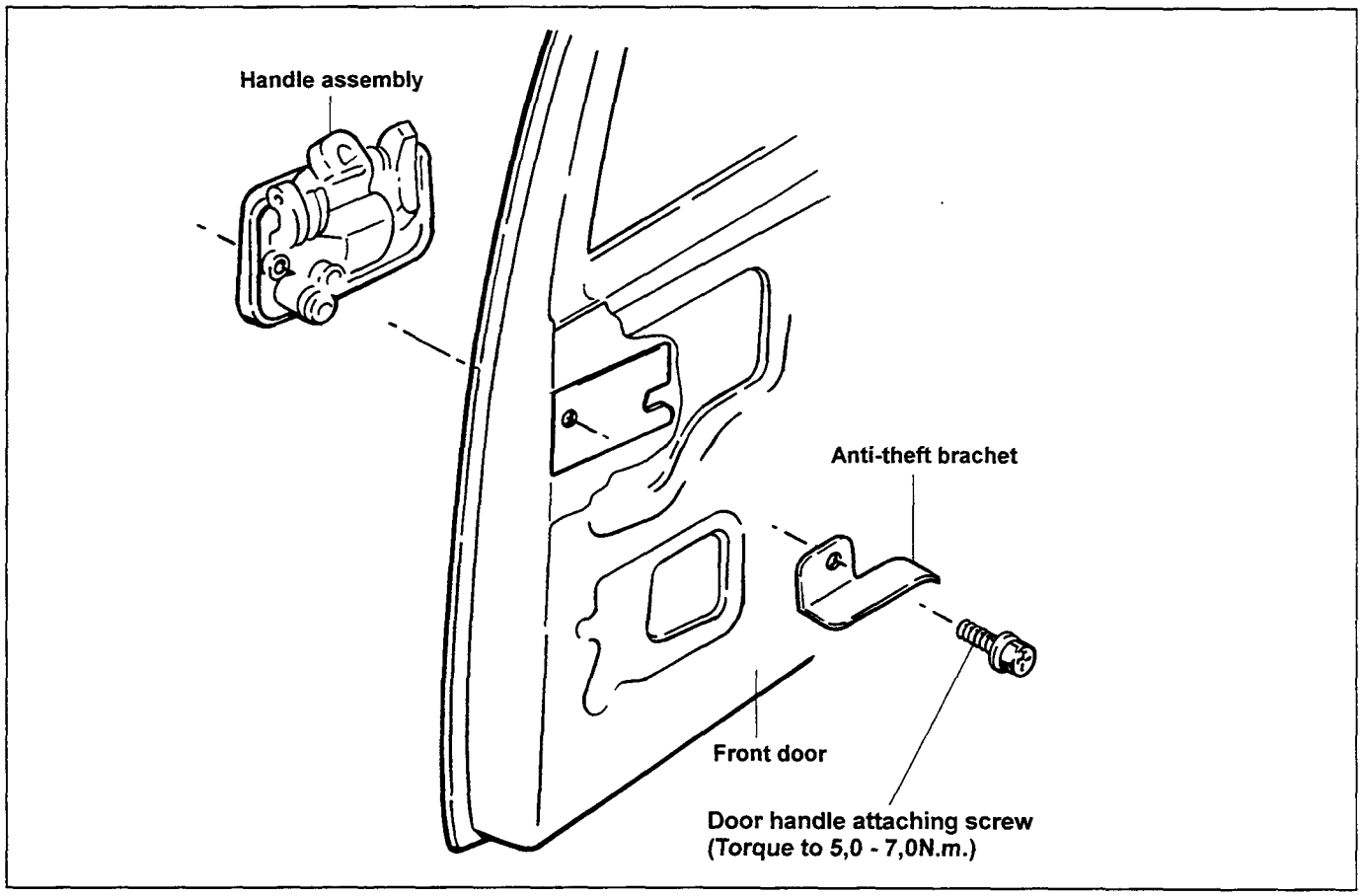

Removal Steps

1. Remove front door trim panel - Refer Section 10-13.
2. Remove existing rear most door handle attaching bolt.
3. Remove anti-theft bracket.

Installation

1. Hold door handle in position on locating holes in door outer sheet metal panel.
2. Place anti-theft bracket on rear door handle locating hole.
3. Use door handle attaching screw to attach the anti-theft bracket.
4. Reassemble door trim panel and components.

Note:
Care needs to be taken when removing/ installing, so that bracket/screw does not drop into the door assembly.

INSTRUMENT PANEL

REMOVAL

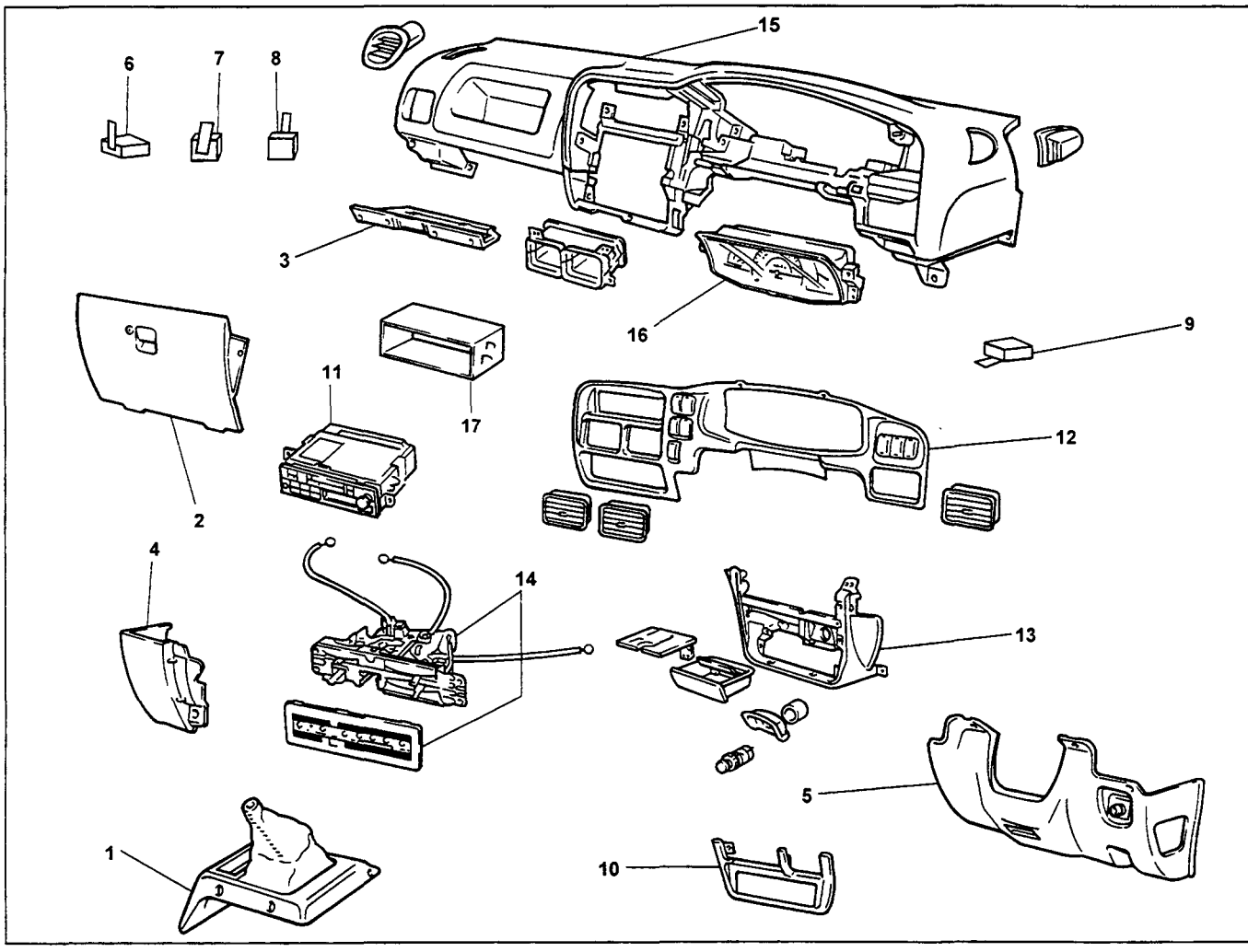

Removal Steps

- ▲ 1. Center console assembly
- ▲ 2. Glove box
- ▲ 3. Glover box cover
- ▲ 4. Instrument panel passenger lower cover assembly
- ▲ 5. Instrument panel driver lower cover assembly
- 6. Warning buzzer
- 7. CDL Interface unit
- 8. Temperature controller
- 9. AM key module
- ▲ 10. Lower cluster assembly
- 11. Radio assembly
- ▲ 12. Meter cluster assembly
- ▲ 13. Instrument panel lower center cover assembly
- 14. Control lever assembly
- 15. Instrument panel assembly
- 16. Meter assembly
- 17. Radio bracket

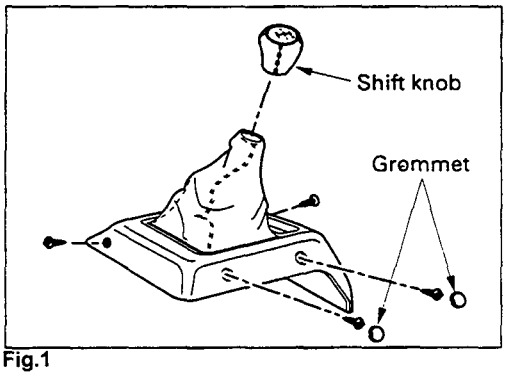

Fig.1

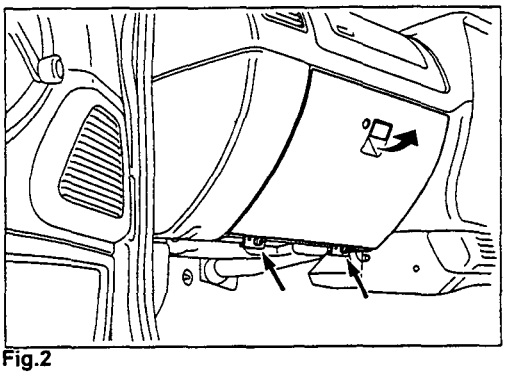
Fig.2

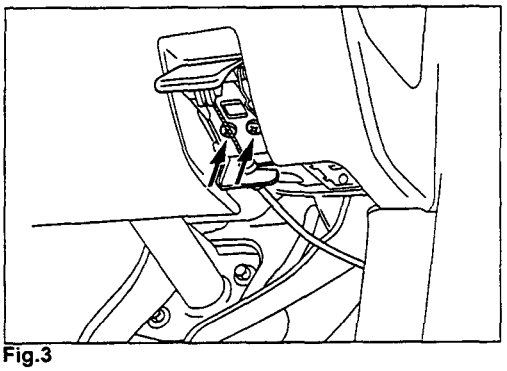
Fig.3

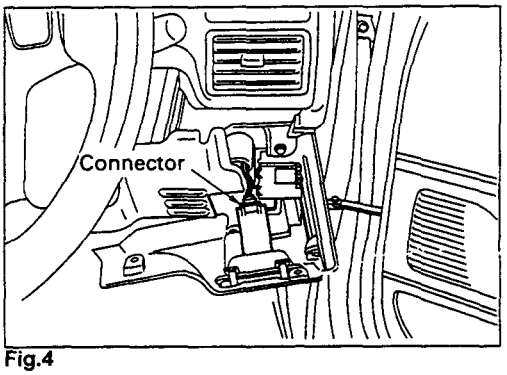

Fig.4

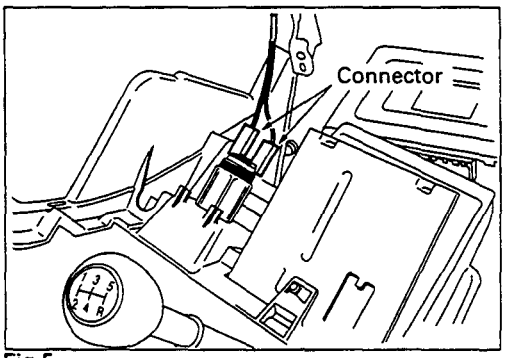

Fig.5

Important Operations

1. **Center Console Assembly (Fig.1)**
   - Remove shift knob and 2 fixing screws (front side).

     Open the grommet and remove 2 fixing screws. (rear side).

2. **Glove Box (Fig.2)**
   - Remove 2 fixing screws and pulling the handle.
3. **Glove Box Cover**
   - Remove 4 fixing screws and pull the cover toward you and remove the clips at 2 positions.
4. **Instrument Panel Passenger Lower Cover Assembly**
   - Remove 3 fixing screws and 1 clip.

5. **Instrument Panel Driver Lower Cover Assembly (Fig.3)**
   - Remove the engine hood opener 2 fixing screws and 6 fixing screws.

   - Disconnect the connector of the illumination. **(Fig.4)**

10. **Lower Cluster Assembly**
    - Remove 3 fixing clips.
12. **Meter Cluster Assembly**
    - Remove 3 fixing screws, 7 clips and switch connectors.

13. **Instrument Panel Lower Center Cover Assembly (Fig.5)**
    - Remove 7 fixing screws and disconnect the connector of the cigarette lighter.

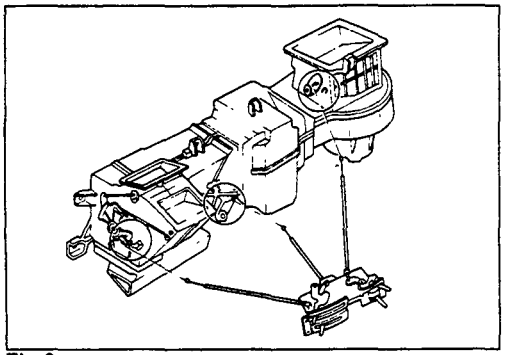

Fig.6

13. Control Lever Assembly (Fig.6)

1) Disconnect the control cable from heater unit and blower unit.
2) Remove the control lever assembly fixing screws.

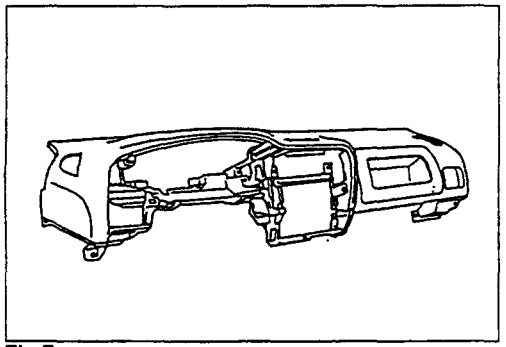

Fig.7

14. Instrument Panel (Fig.7)

1) Remove the instrument panel fixing nuts and bolts.

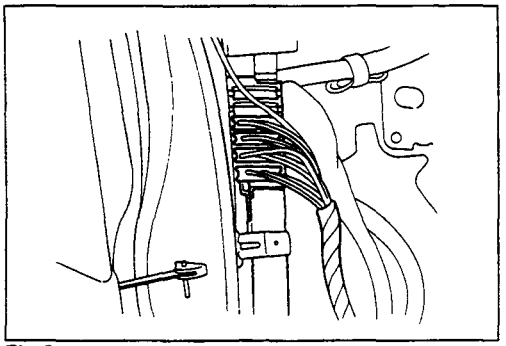

Fig.8

2) Disconnect the instrument harness on ECM. **(Fig.8)**
3) Remove the instrument panel.

INSTALLATION

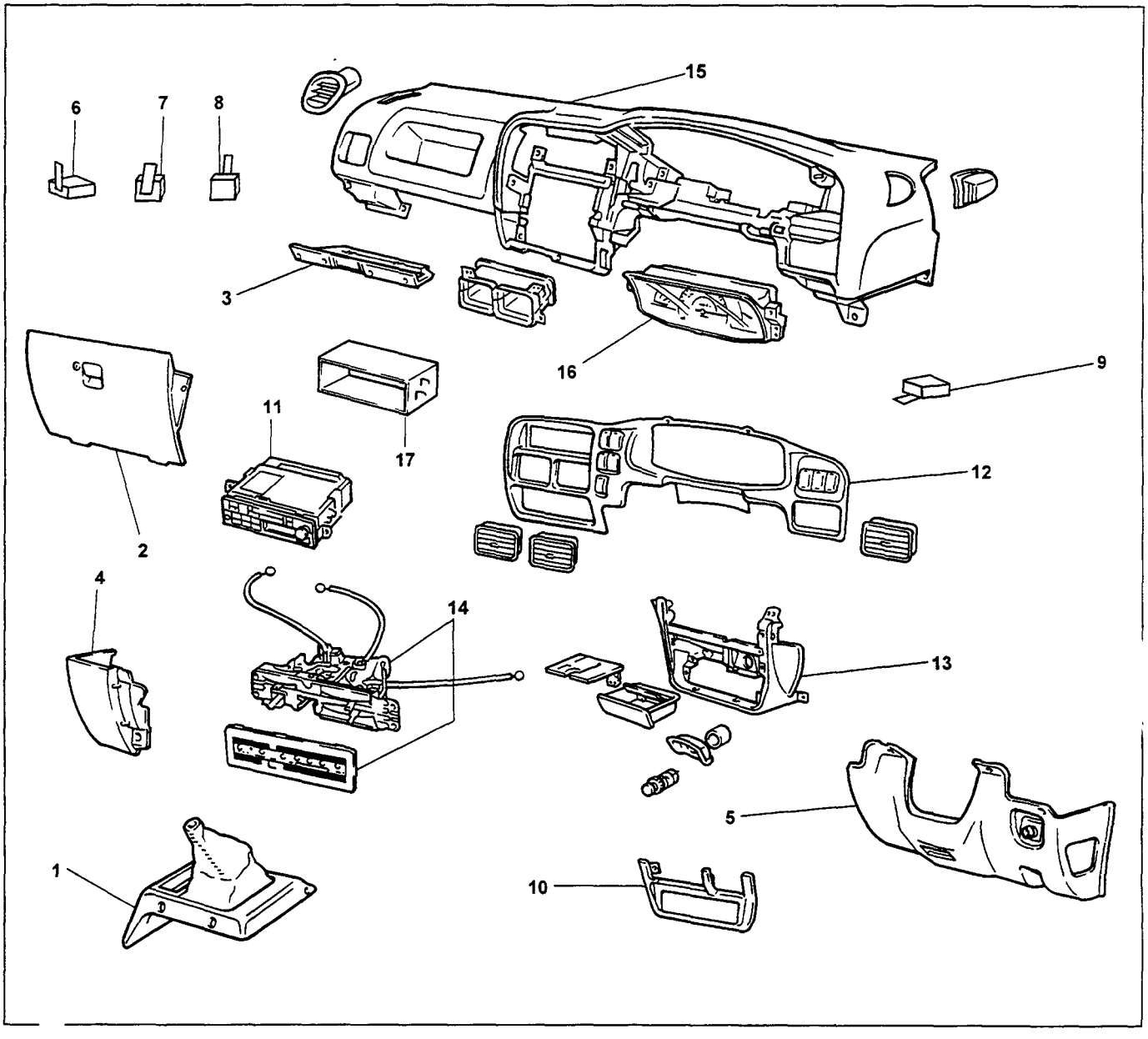

Installation Steps

17. Radio bracket
16. Meter assembly
15. Instrument panel assembly
▲ 14. Control lever assembly
13. Instrument panel lower center cover assembly
12. Meter cluster assembly
11. Radio assembly
10. Lower cluster assembly
9. AM key module
8. Temperature controller
7. CDL Interface unit
6. Warning buzzer
5. Instrument panel driver lower cover assembly
4. Instrument panel passenger lower cover assembly
3. Glove box cover
2. Glove box
1. Center console

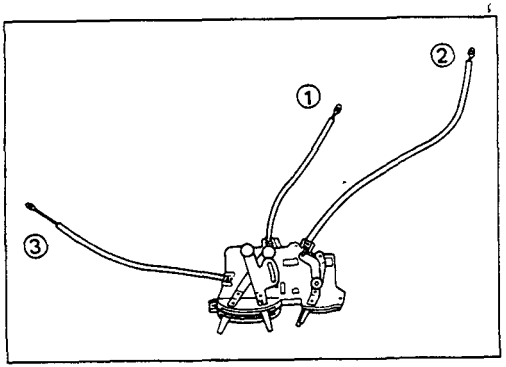

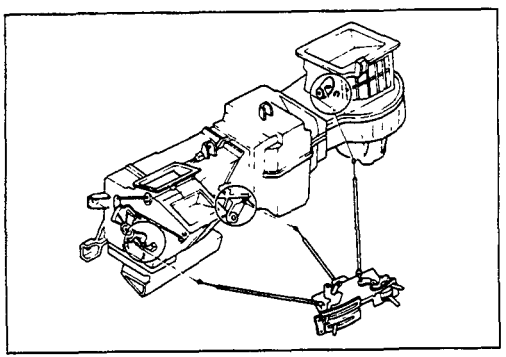

14. Control Lever Assembly

1) Set the temperature control lever and the airsource select lever st the left-hand side end.
2) Set the air selector lever at the right-hand side end.

1: Temperature control cable.
2: Air source select cable.
3: Air selector.

3) Attach the cable, after the work 1) and 2) have been completed.

BEZEL - VEHICLE SECURITY SYSTEM

REMOVAL AND INSTALLATION

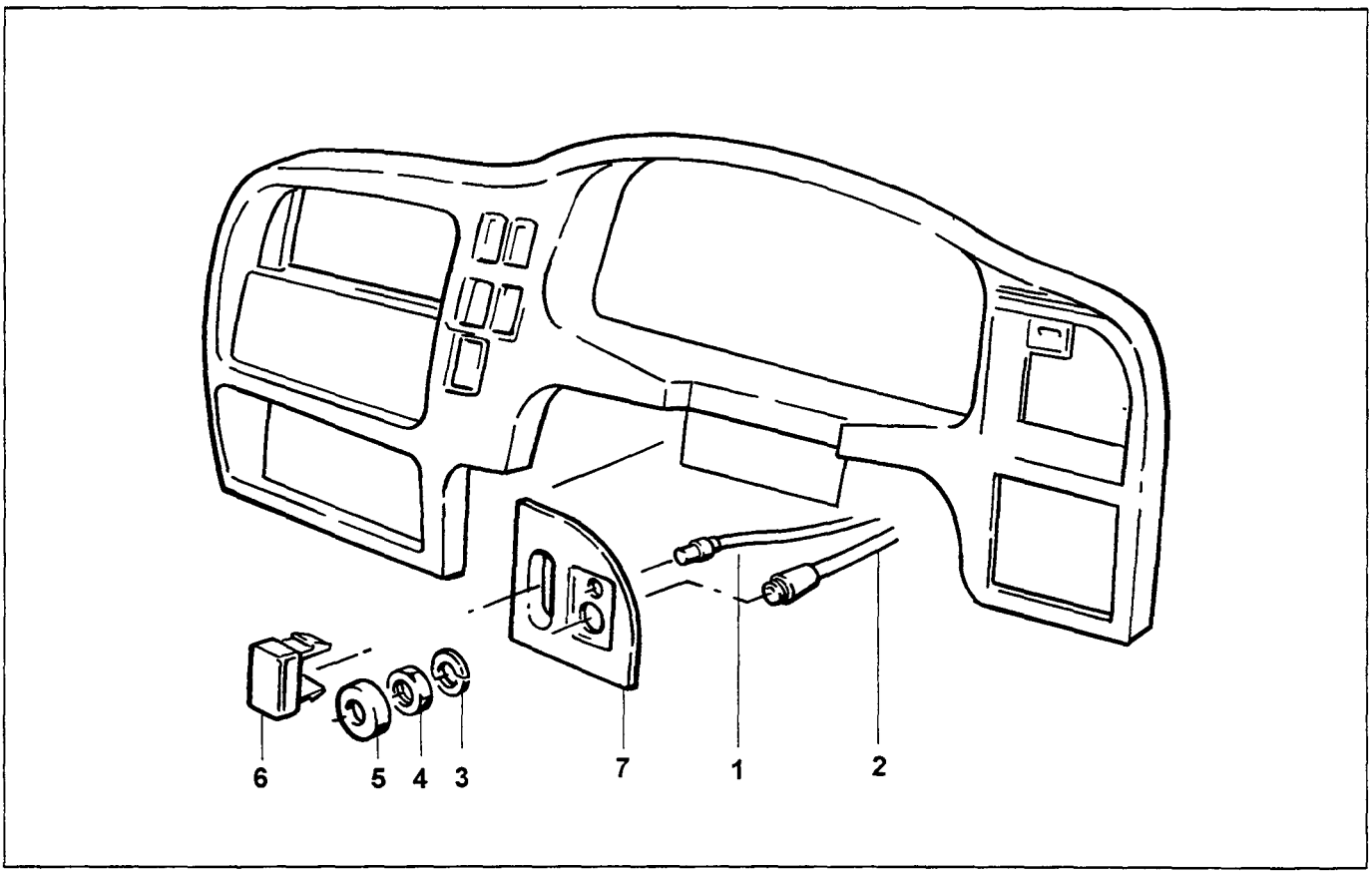

Installation Steps

1. Light-emitting diode (led) lead
2. Jack plug lead
3. Washer
4. Nut
5. Grommet
6. Hole cover
7. Bezel VSS

Removal Steps

7. Bezel VSS
6. Hole cover
5. Grommet
4. Nut
3. Washer
2. Jack plug lead
1. Led lead

RADIO

REMOVAL AND INSTALLATION

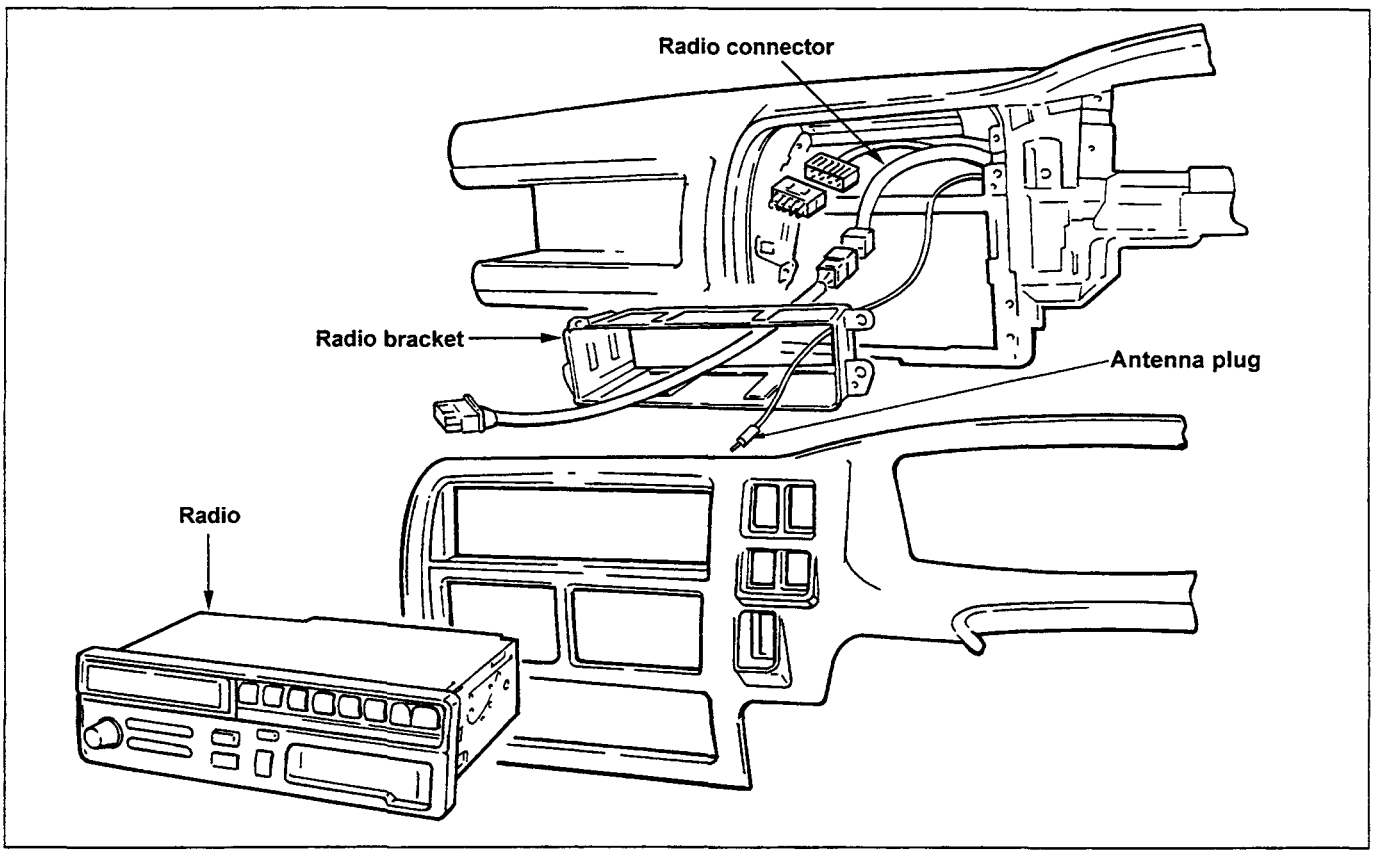

Removal Steps

SANYO FXR 100 LD/FXR 315

1. • Insert an unlock lever (supplied with radio) into the slot on each side of the radio until it clicks.
   • Do not insert the levers upside down.
   • Press levers downward, then pull levers to remove the radio.
   • Unplug the radio connector and antenna cable.

Installation Steps

1. Plug in the radio connector and antenna cable. Make sure that the antenna cable plug goes in all the way.
2. Guide the cables carefully into the aperture, and slide the radio into position until it clicks.

Removal Steps

SANYO FXR 713 RDS

1. Remove radio face.
2. Insert unlock rods (supplied with radio) into the holes on each side of the radio until they click.
   - Pull levers to remove the radio.
   - Unplug the radio connector and antenna cable.

Installation Steps

1. Plug in the radio connector and antenna cable. Make sure that the antenna cable plug goes in all the way.
2. Guide the cables carefully into the aperture, and slide the radio into position until it clicks.

FRONT SPEAKER

REMOVAL AND INSTALLATION

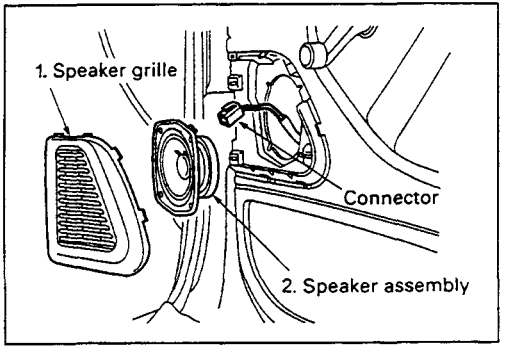

Removal Steps

1. **Speaker Grille**
   - Pull the grille to release the clips.
2. **Speaker**
   - Remove four screws.
   - Disconnect the connector.

Installation Steps

To install, follow the removal steps in the reverse order, pushing the grille in carefully untill it locks.

REAR SPEAKER

REMOVAL AND INSTALLATION

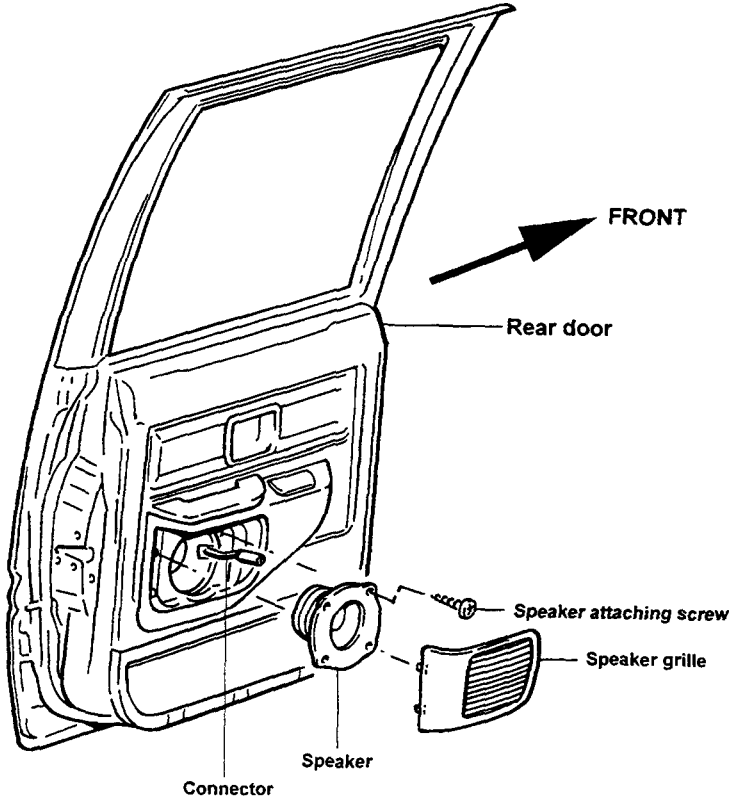

Removal Steps

1. ***Speaker Grille***
   - Pull the grille to release the clips.

2. **Speaker**
   - Remove four screws.
   - Disconnect the connector.

Installation Steps

To install, follow the removal steps in the reverse order, pushing the grille in carefully untill it locks.

Note:

Connector should point towards the front of vehicle

ANTENNA

REMOVAL AND INSTALLATION

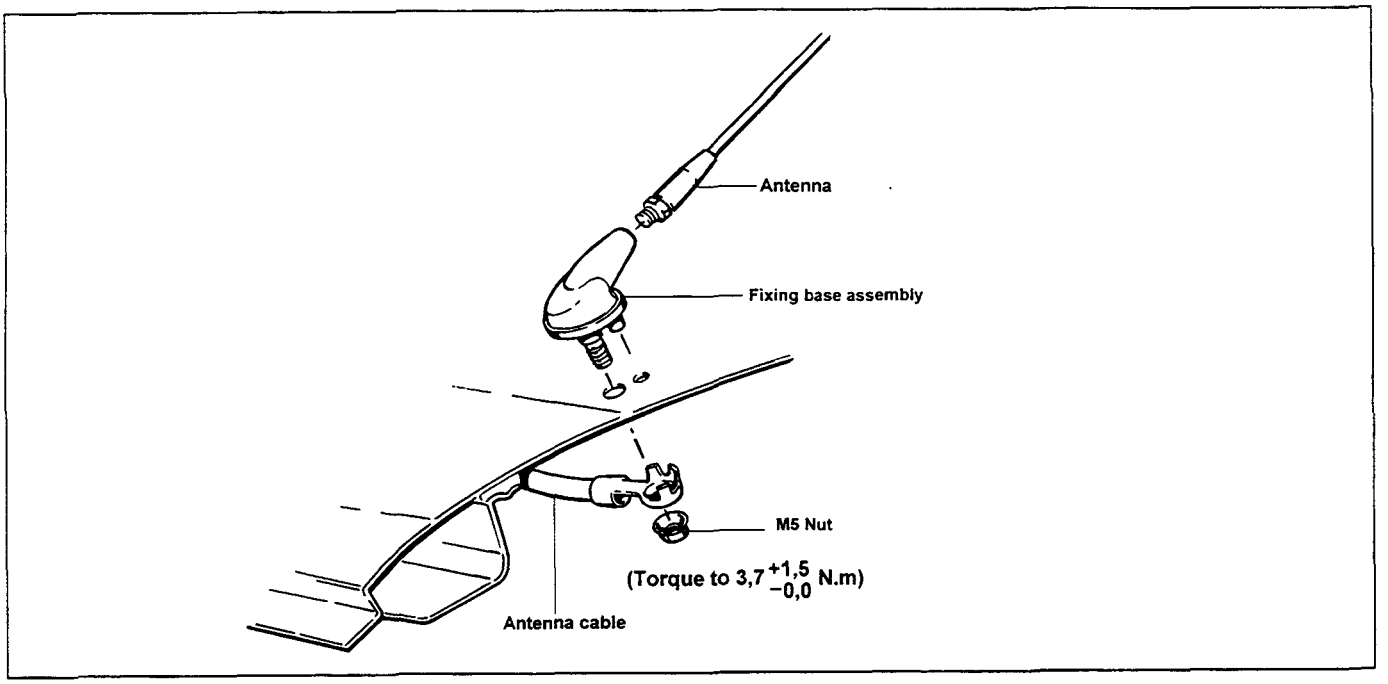

DOUBLE CAB MODELS

Removal Steps

1. **Roof headliner**
   - Remove:
     Sun visors.
     Sun visor support clips.
     Map reading lamp.
     Roof mounted assist grips and plugs.
     Interior light.
   - Remove headliner from vehicle - refer section (10-39).

2. **Antenna**
   - Remove M5 nut assembly (8mm socket).
   - Remove antenna and base assembly.
   - Antenna can be unscrewed from base.

Installation Steps

- Reverse above procedure, making sure that locator on antenna gasket is correctly installed into hole in roof and that cable is correctly intalled before entering nut. Torque nut to 3,7 $^{+1,5}_{-0,0}$N.m.

DOUBLE CAB MODELS

Removal Steps

1. **Roof headliner**
   - Remove:

     Sun visors.
     Sun visor support clips.
     Map reading lamp.
     Front roof mounted assist grips and plugs.
     Front door lace from pinch weld.
   - Pull headliner front down sufficiently to allow access to antenna mounting nut.

2. **Antenna**
   - Remove M5 nut assembly (8mm socket).
   - Remove antenna and base assembly.
   - Antenna can be unscrewed from base.

Installation Steps

- Reverse above procedure, making sure that locator on antenna gasket is correctly installed into hole in roof and that cable is correctly intalled before entering nut. Torque nut to 3,7 $^{+1,5}_{-0,0}$ Nm.

DRIVER'S FOOTREST

REMOVAL AND INSTALLATION

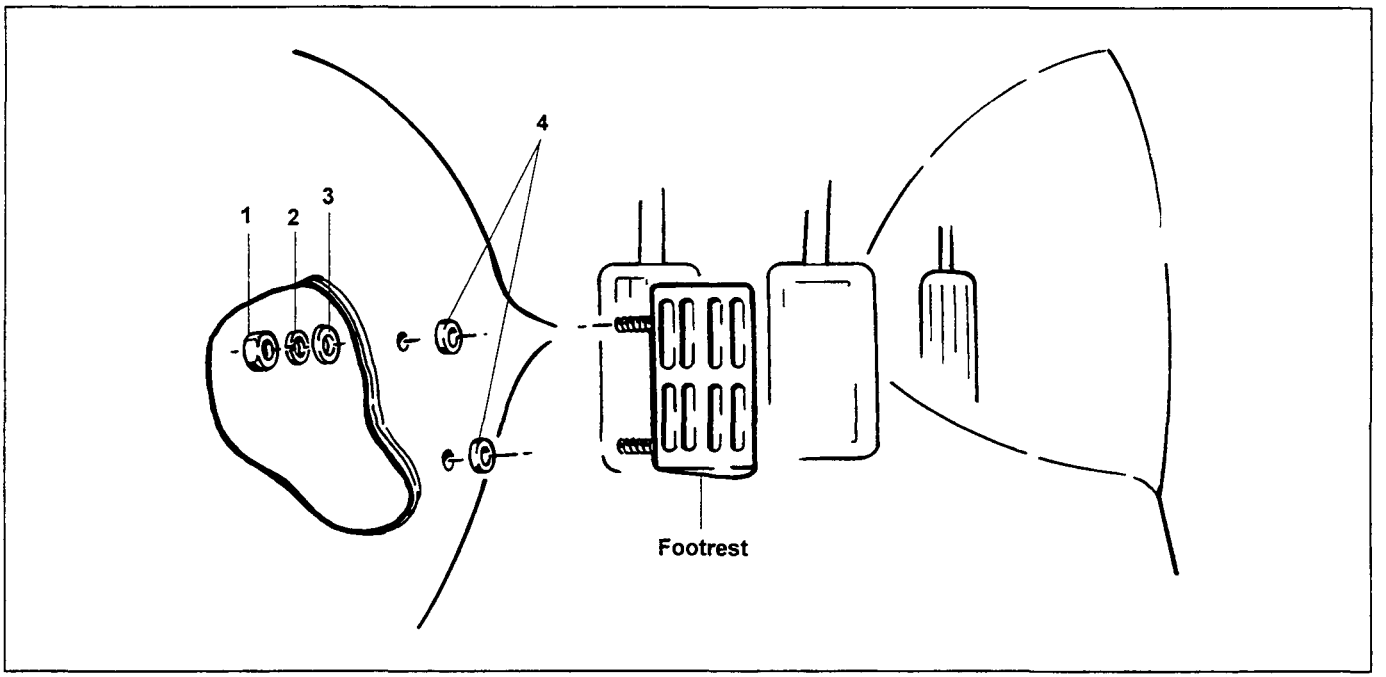

Removal Steps

1. Remove 2 nuts and washers (1, 2, 3) from underneath vehicle.
2. Remove footrest and 2 spacers (4) from inside vehicle.

Installation Steps

1. Place 2 spacers (4) over footrest studs.
2. Enter footrest studs into hole in floor through carpet. (from inside of vehicle).
3. From underneath of vehicle, enter washers and nuts onto studs.
4. Tighten nuts.

CONSOLE BOX

REMOVAL AND INSTALLATION

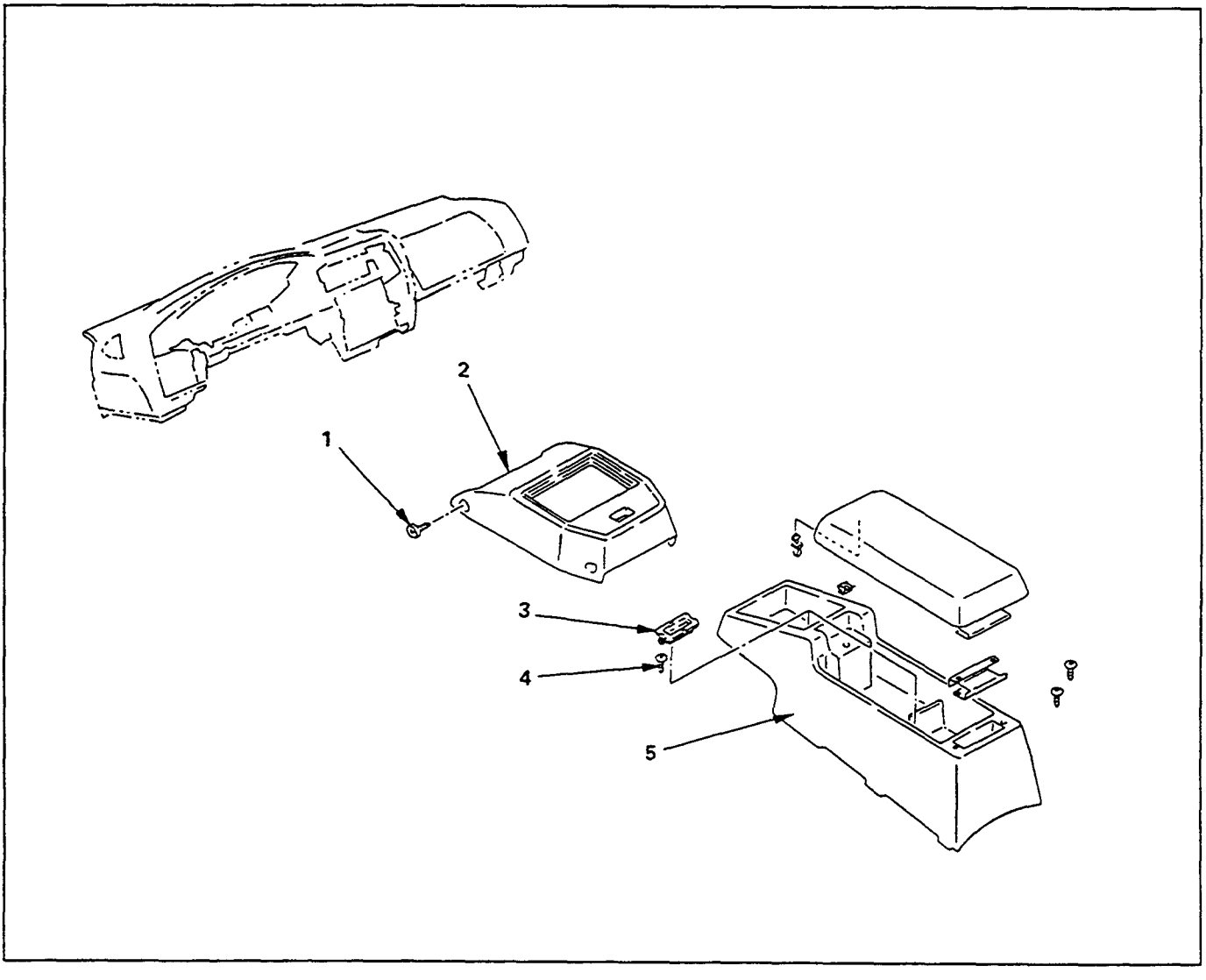

Removal Steps

1. Screw
2. Center console
3. Hole cover
4. Screw
5. Rear console

Installation Steps

5. Rear console
4. Screw
3. Hole cover
2. Center console
1. Screw

HEADLINING

GENERAL DESCRIPTION

STANDARD CAB

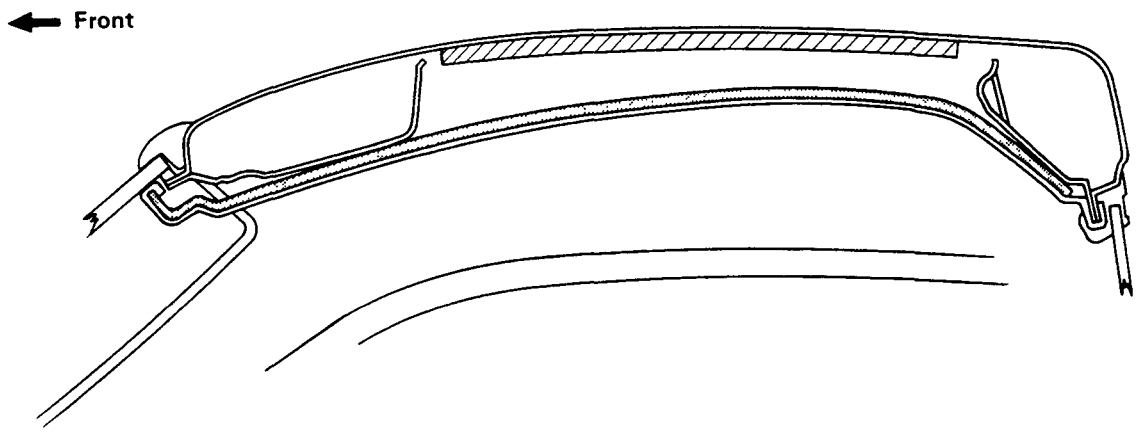

DOUBLE CAB

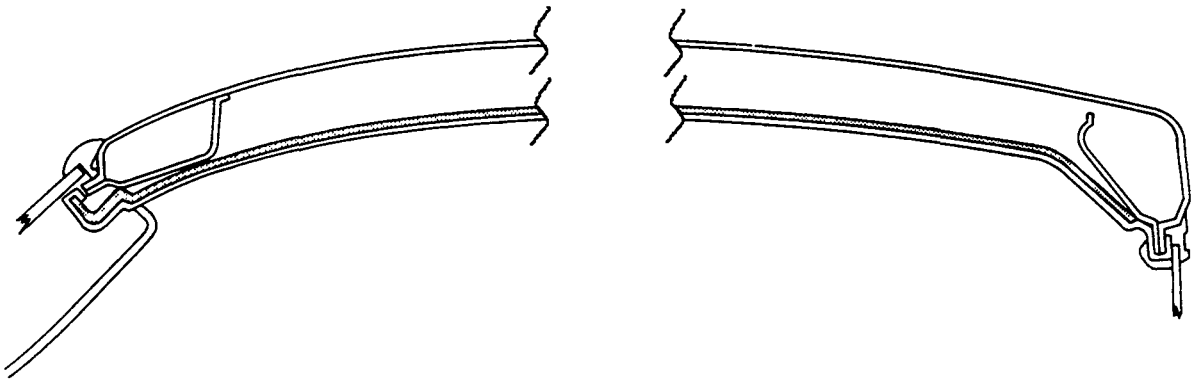

REMOVAL AND INSTALLATION

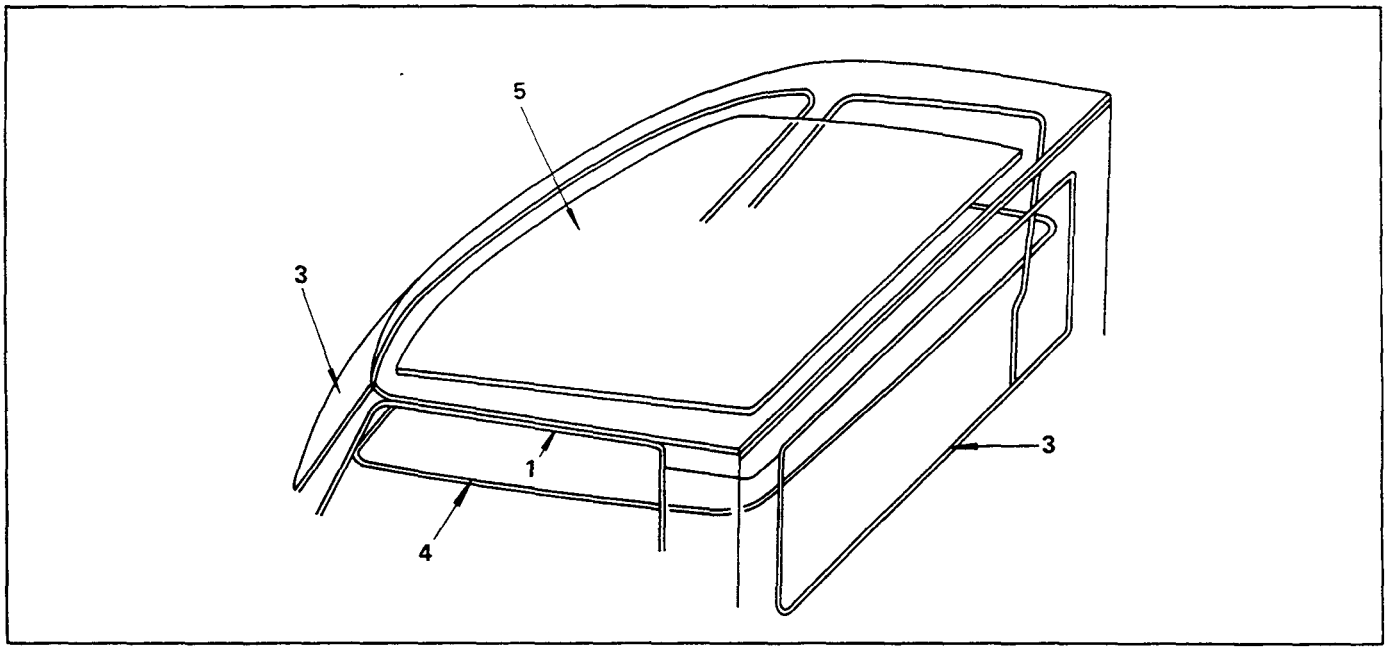

Removal Steps

1. Door finisher
2. Sun visor and dome lamp assembly
3. Windshield and back light glass
4. Head lining
5. Insulation pad

Note: Item 5 not required for double cab.

Installation Steps

5. Insulation pad
▲ 4. Headlining
3. Windshield and back light glass
2. Rear view mirror, sunvisor and dome lamp assembly
1. Door finisher

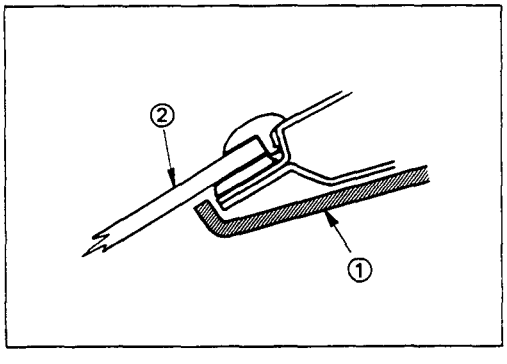

Important Operations — Installation

4. Head Lining

1) Install the headlining ① to the body panel.
   ②: Windshield glass

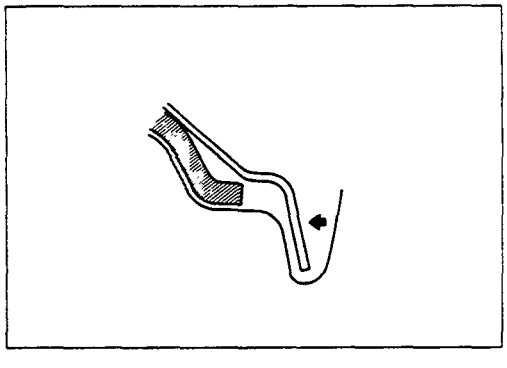

2) Roll up the headlining in the body side of the back light glass and door opening.

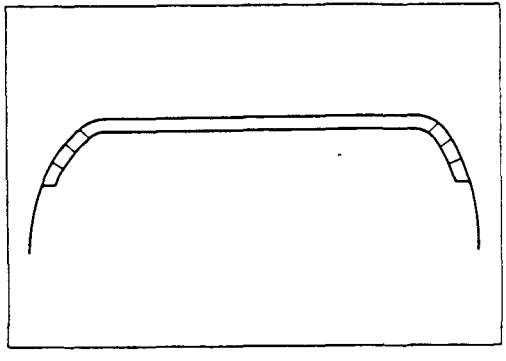

3) Roll up the headlining provided with slits, in the corner.

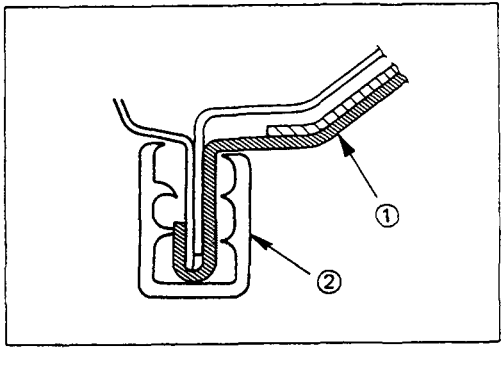

4) Roll up the headlining ① in the body side of door opening.
5) Fix to the door side, using the finisher ②.

FRONT SEAT

SPECIAL PARTS FIXING BOLT

Torque N.m

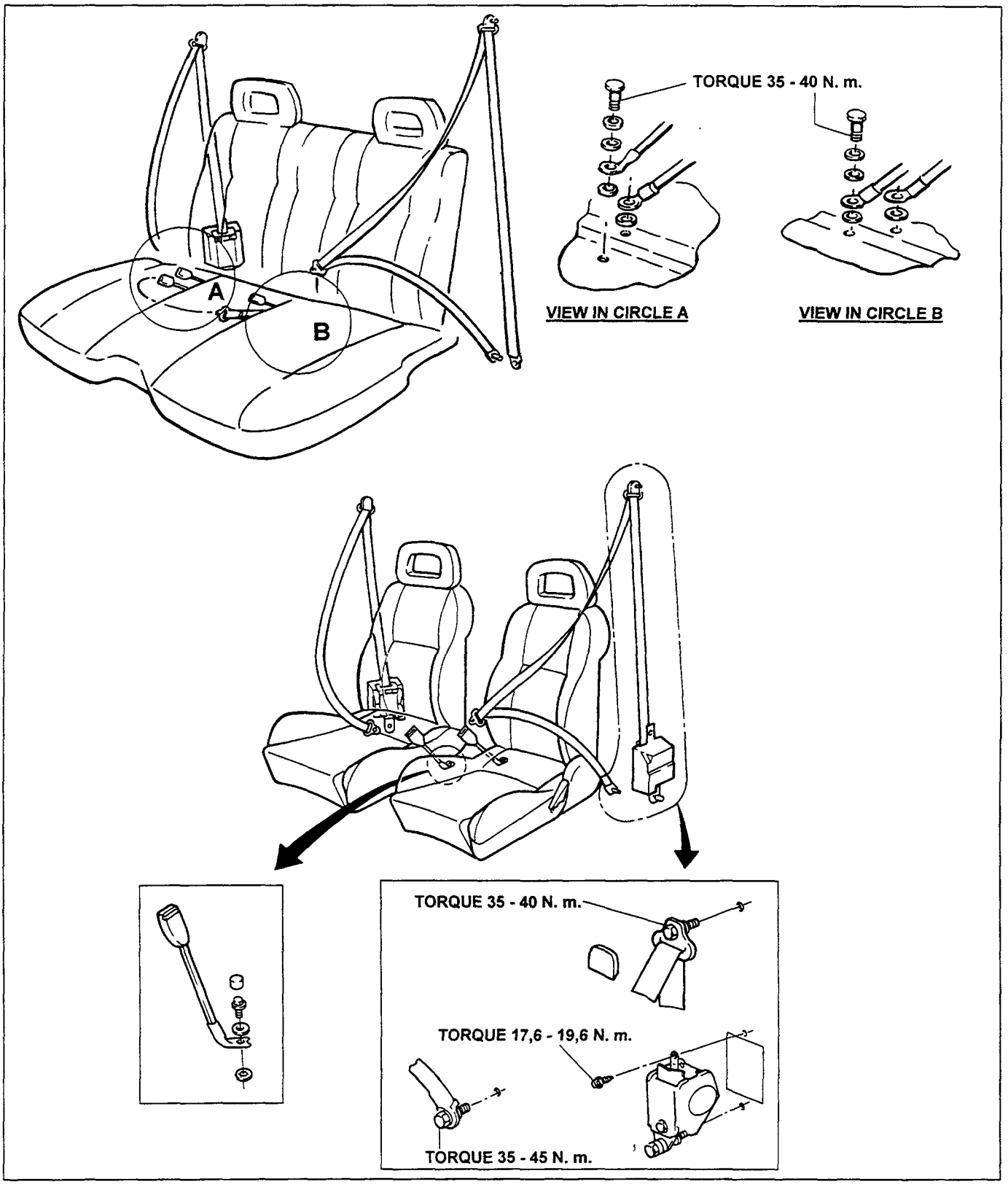

REMOVAL AND INSTALLATION

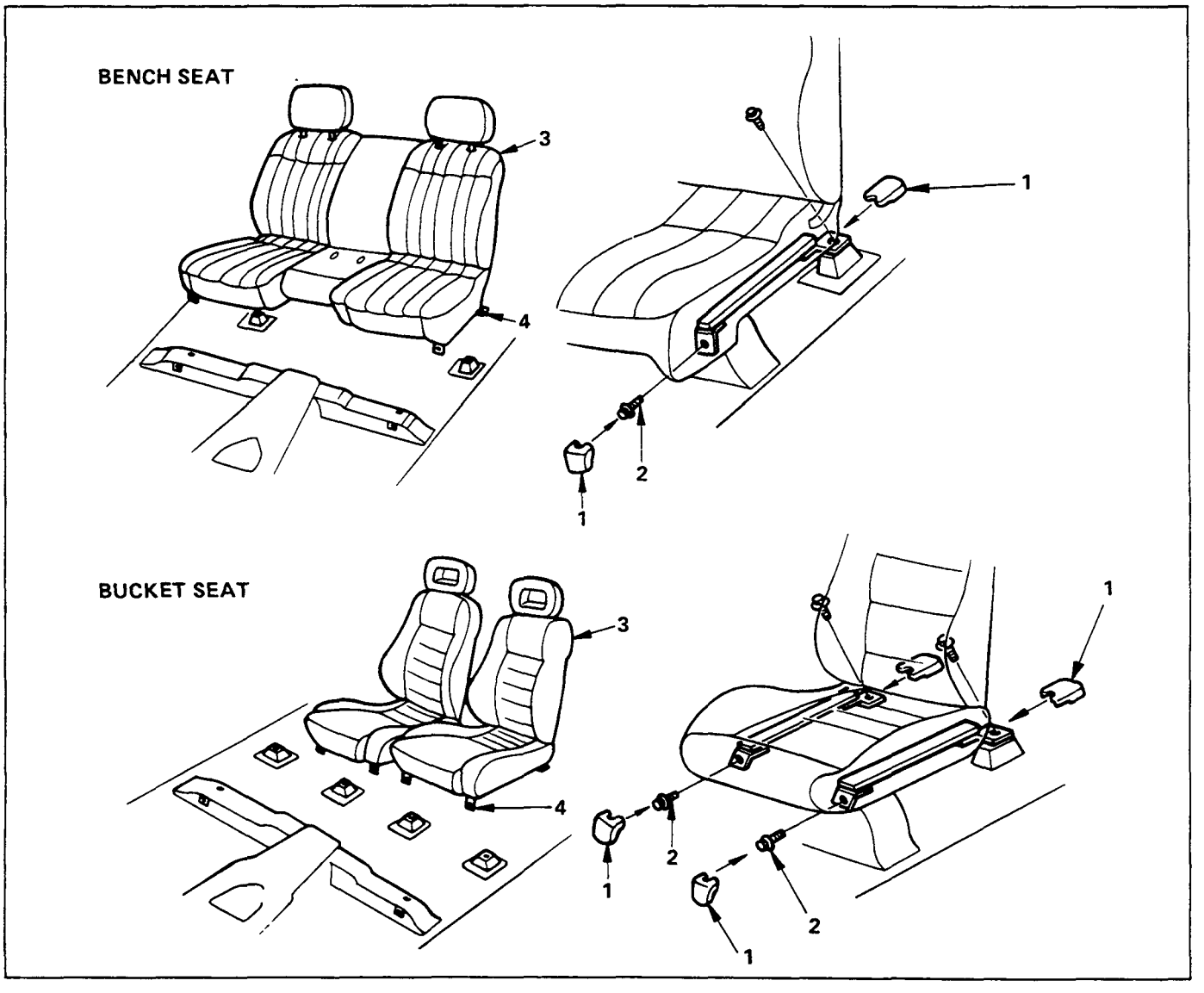

Removal Steps

1. Adjuster cover
2. Bolt
3. Seat assembly
4. Adjuster

Installation Steps

4. Adjuster
3. Seat assembly
▲ 2. Bolt
1. Adjuster cover

Important Operation — Installation

2. Bolt

Bolt Torque
35,0 - 45,0 N.m

FRONT SEAT ASSEMBLY

Left Hand Seat

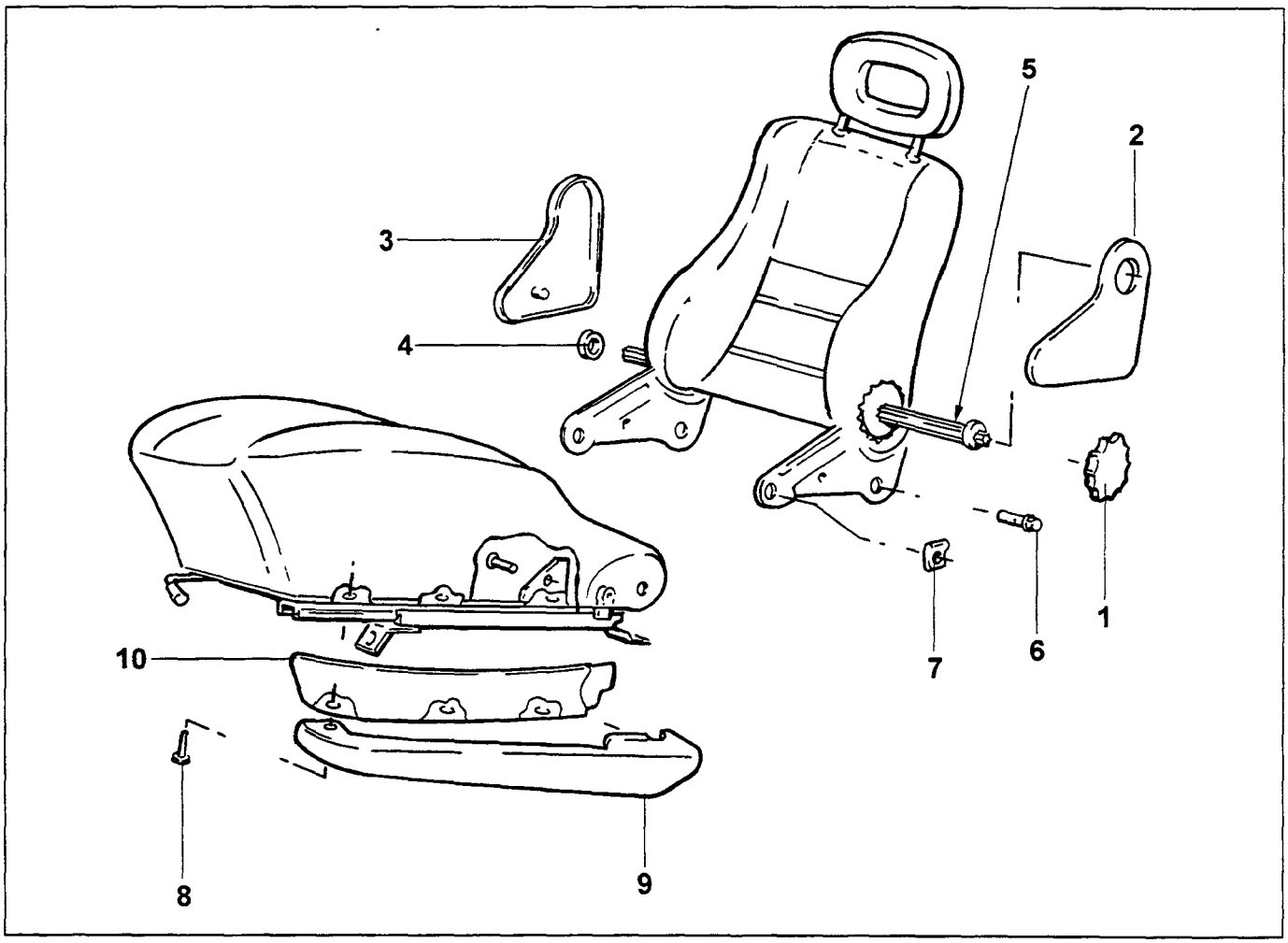

Removal Steps

1. Adjuster wheel, seat back
2. Cover, adjuster (outer)
3. Cover, adjuster (inner)
4. Plug
5. Connector rod assembly
6. Screw
7. Locking washer
8. Oval head screw
9. Seat slide cover
10. Front seat cover

Installation Steps

10. Front seat cover
9. Seat slide cover
8. Oval head screw
7. Locking washer
6. Screw
5. Connector rod assembly
4. Plug
3. Cover, adjuster (inner)
2. Cover, adjuster (outer)
1. Adjuster wheel, seat back

FRONT SEAT ASSEMBLY

Right Hand Seat

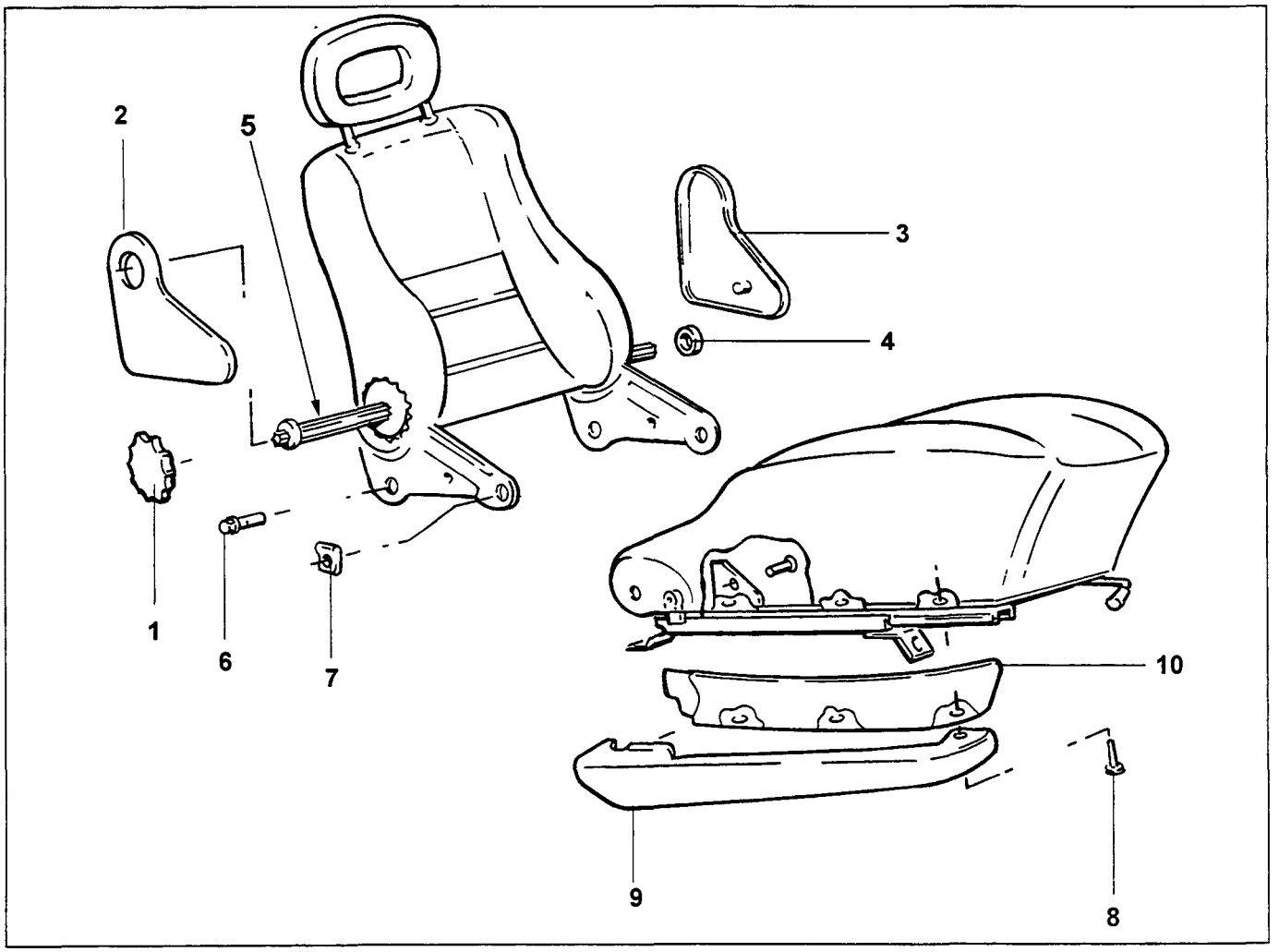

Removal Steps

1. Adjuster wheel, seat back
2. Cover, adjuster (outer)
3. Cover, adjuster (inner)
4. Plug
5. Connector rod assembly
6. Screw
7. Locking washer
8. Oval head screw
9. Seat slide cover
10. Front seat cover

Installation Steps

10. Front seat cover
9. Seat slide cover
8. Oval head screw
7. Locking washer
6. Screw
5. Connector rod assembly
4. Plug
3. Cover, adjuster (inner)
2. Cover, adjuster (outer)
1. Adjuster wheel, seat back

FRONT SEAT BACK REST

Left Hand Seat

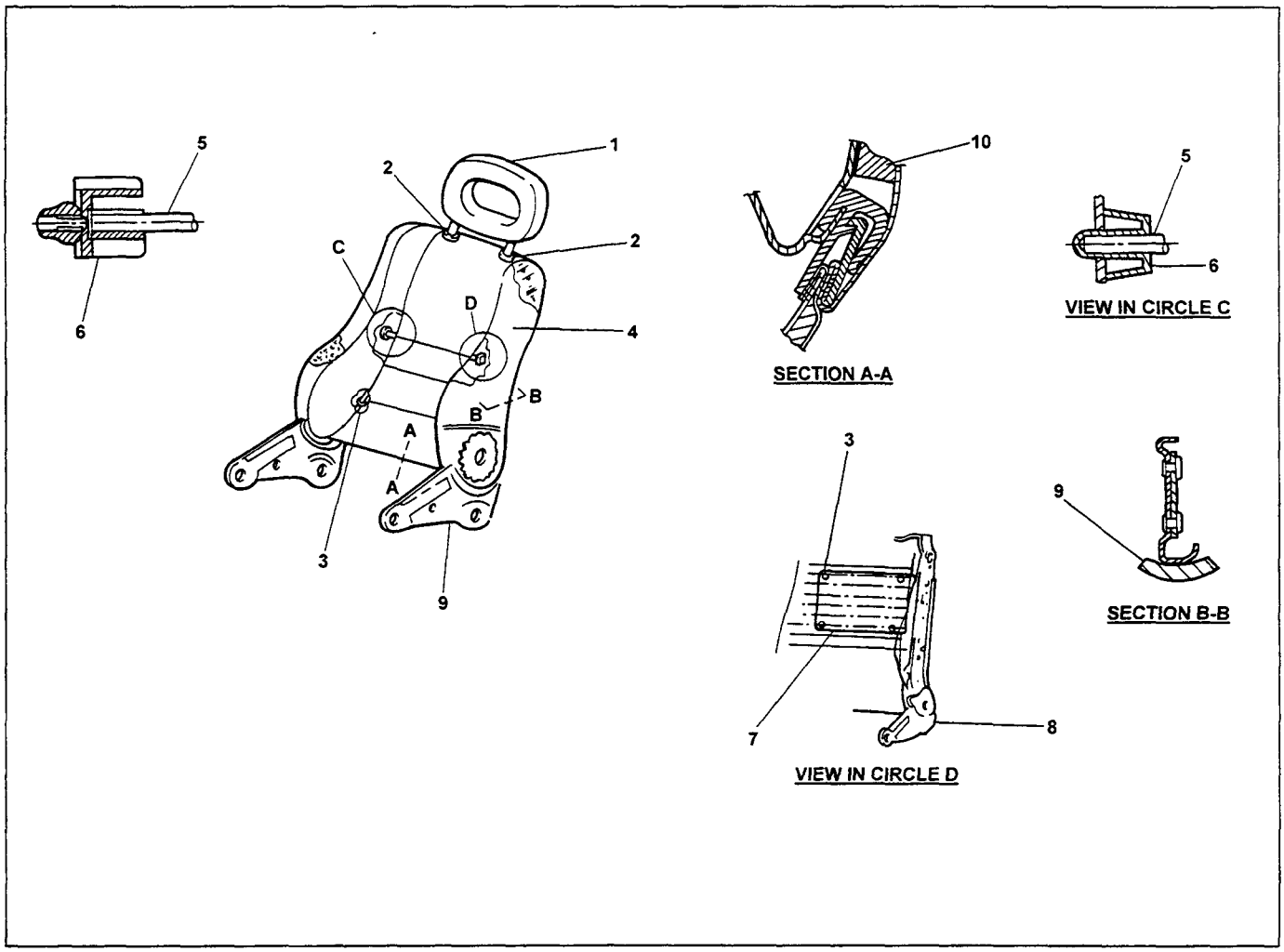

Removal Steps

1. Head rest assembly
2. Head rest sleeve assembly
3. Hog ring
4. Cover assembly, front seat back rest
5. Suspension wire
6. Bushing
7. Insulation, seat back spring
8. Seat back assembly
9. Insulating strip
10. Insulating strip

Installation Steps

10. Insulating strip
9. Insulating strip
8. Seat back assembly
7. Insulation, seat back spring
6. Bushing
5. Suspension wire
4. Cover assembly, front seat back rest
3. Hog ring
2. Head rest sleeve assembly
1. Head rest assembly

FRONT SEAT BACK REST

Right Hand Seat

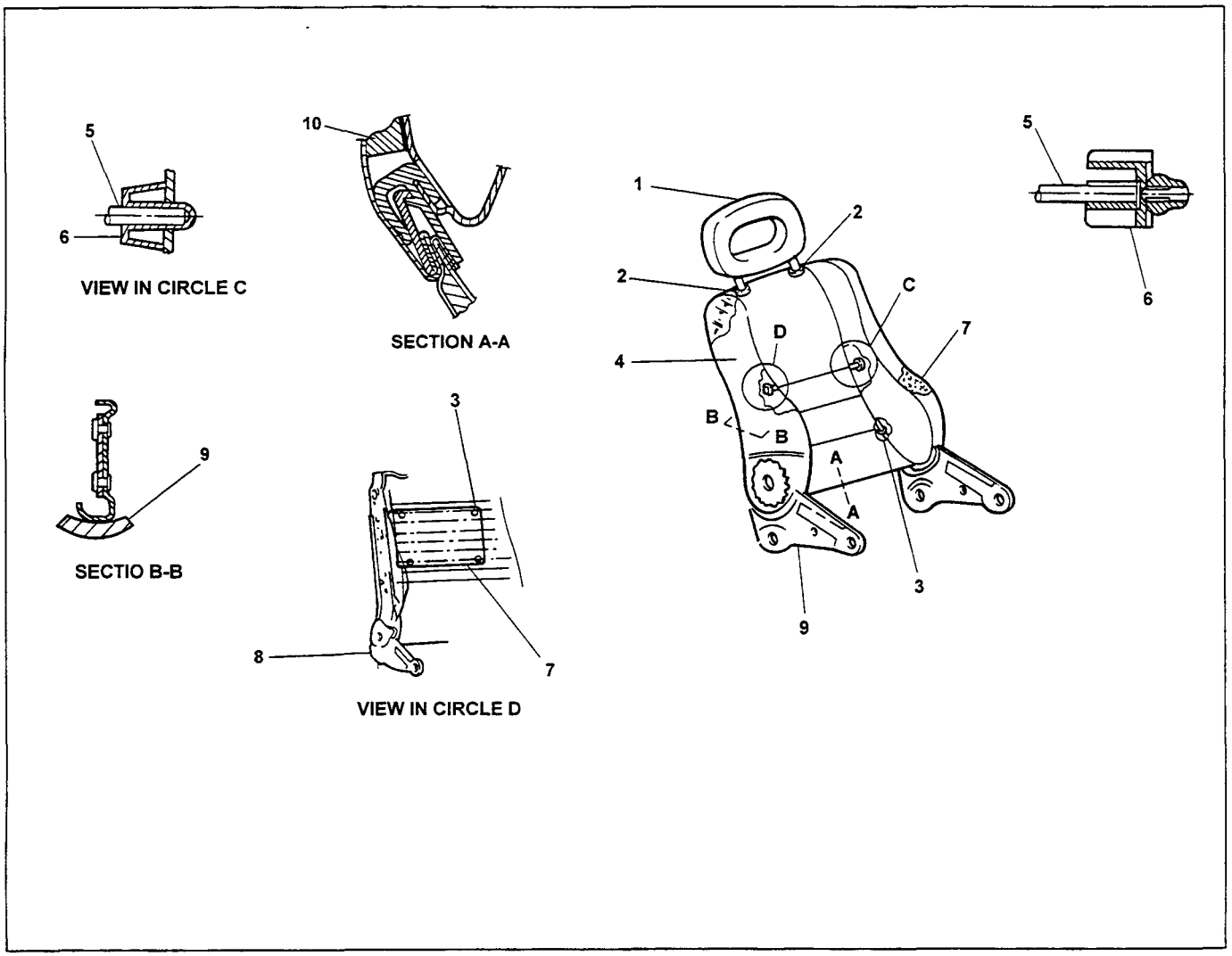

Removal Steps

1. Head rest assembly
2. Head rest sleeve assembly
3. Hog ring
4. Cover assembly, front seat back rest
5. Suspension wire
6. Bushing
7. Insulation, seat back spring
8. Seat back assembly
9. Insulating strip
10. Insulating strip

InstallationSteps

10. Insulating strip
9. Insulating strip
8. Seat back assembly
7. Insulation, seat back spring
6. Bushing
5. Suspension wire
4. Cover assembly, front seat back rest
3. Hog ring
2. Head rest sleeve assembly
1. Head rest assembly

FRONT SEAT CUSHION

Left Hand Seat

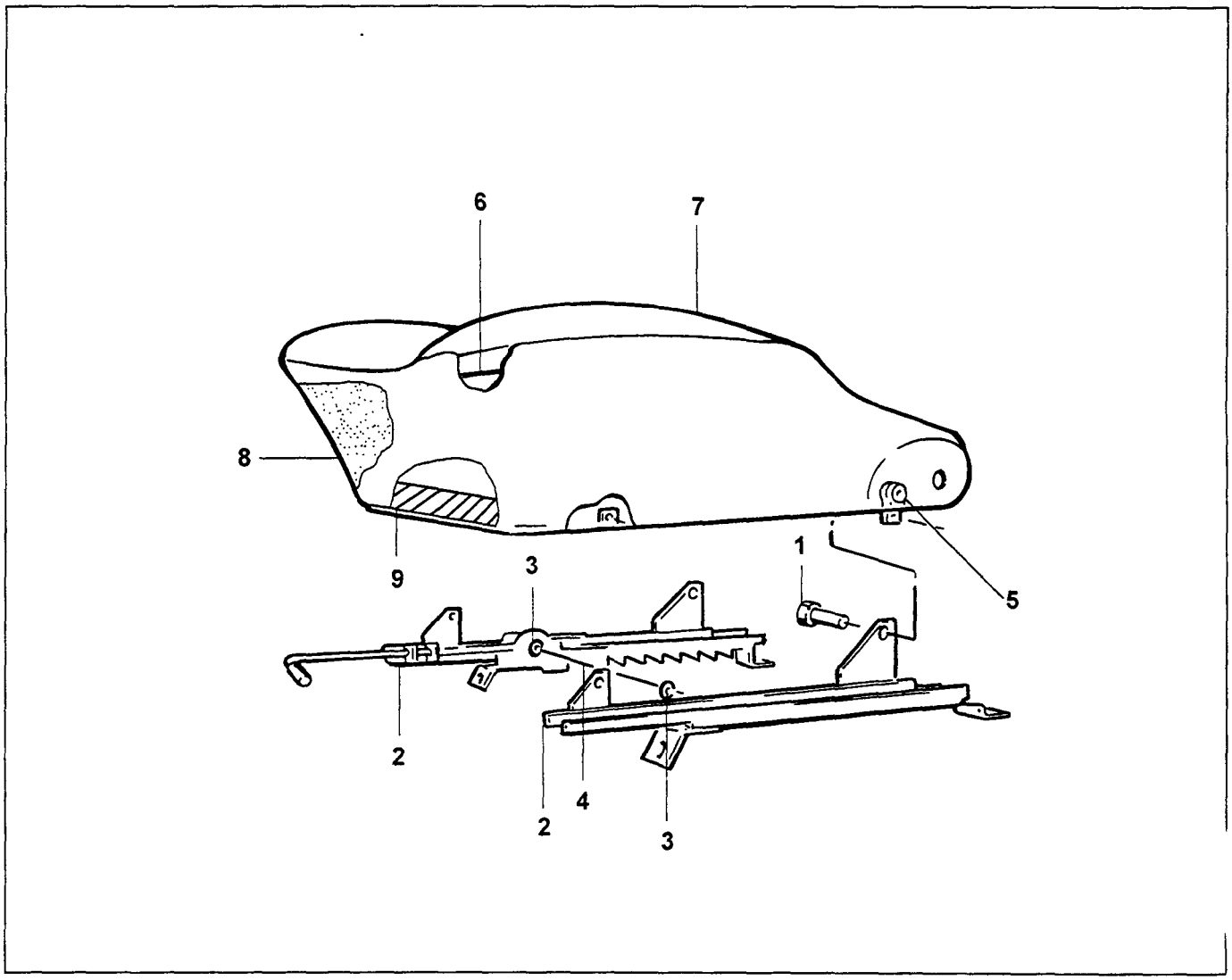

Removal Steps

1. Screw
2. Seat slide assemblies, inner and outer
3. Washer
4. Control cable
5. Screw
6. Hog ring
7. Cover assembly, seat cushion
8. Pad assembly
9. Front seat assembly

Installation Steps

9. Front seat assembly
8. Pad assembly
7. Cover assembly, seat cushion
6. Hog ring
5. Screw
4. Control cable
3. Washer
2. Seat slide assemblies, inner and outer
1. Screw

FRONT SEAT CUSHION

Right Hand Seat

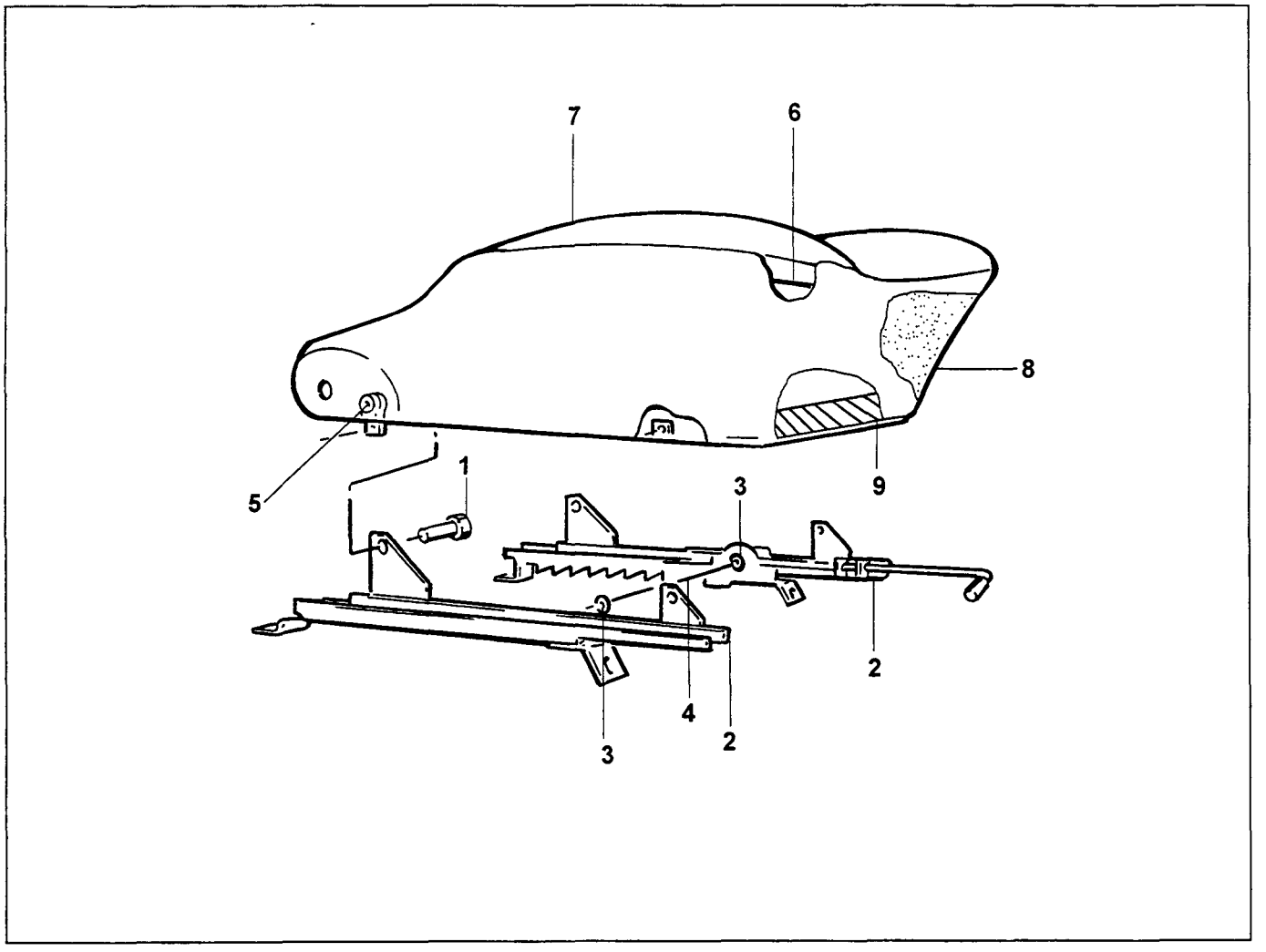

Removal Steps

1. Screw
2. Seat slide assemblies, inner and outer
3. Washer
4. Control cable
5. Screw
6. Hog ring
7. Cover assembly, seat cushion
8. Pad assembly
9. Front seat assembly

Installation Steps

9. Front seat assembly
8. Pad assembly
7. Cover assembly, seat cushion
6. Hog ring
5. Screw
4. Control cable
3. Washer
2. Seat slide assemblies, inner and outer
1. Screw

FRONT AND REAR SEAT BELT

REMOVAL AND INSTALLATION

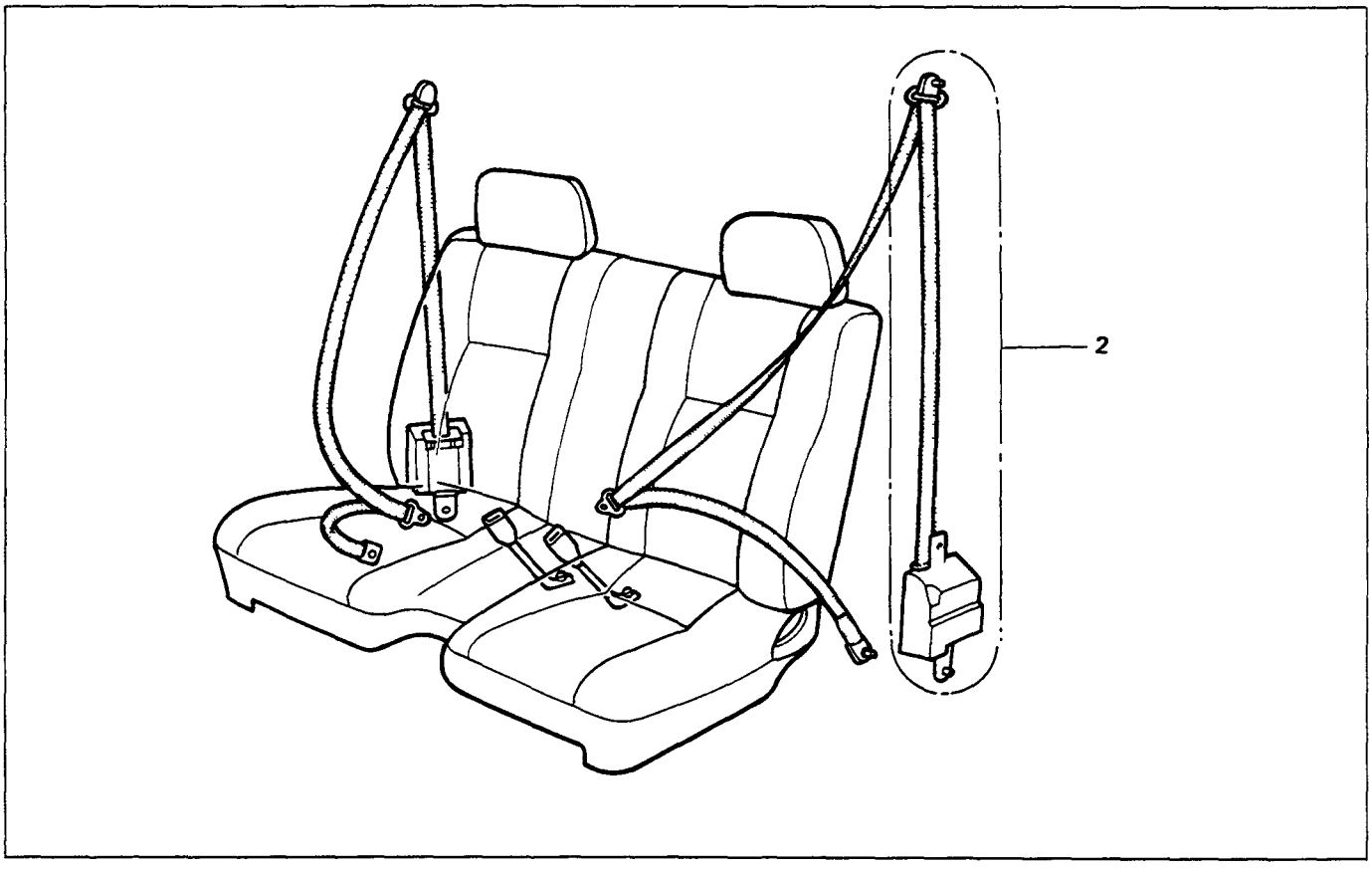

Removal Steps

1. Trim
2. Seat belt and retractor

Installation Steps

2. Seat belt and retractor
1. Trim

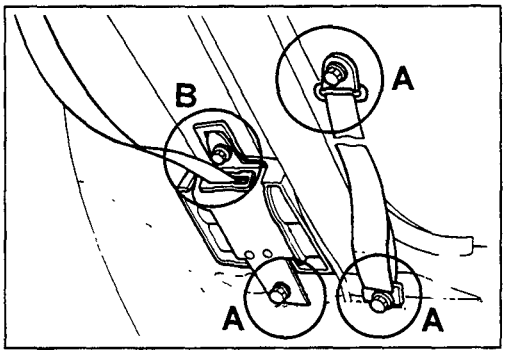

Important Operation – Installation

2. Seat Belt and Retractor

Bolt Torque - N.m

A- 35,0 - 45,0
B- 17,6 - 19,6

VEHICLE SECURITY SYSTEM

REMOVAL AND INSTALLATION

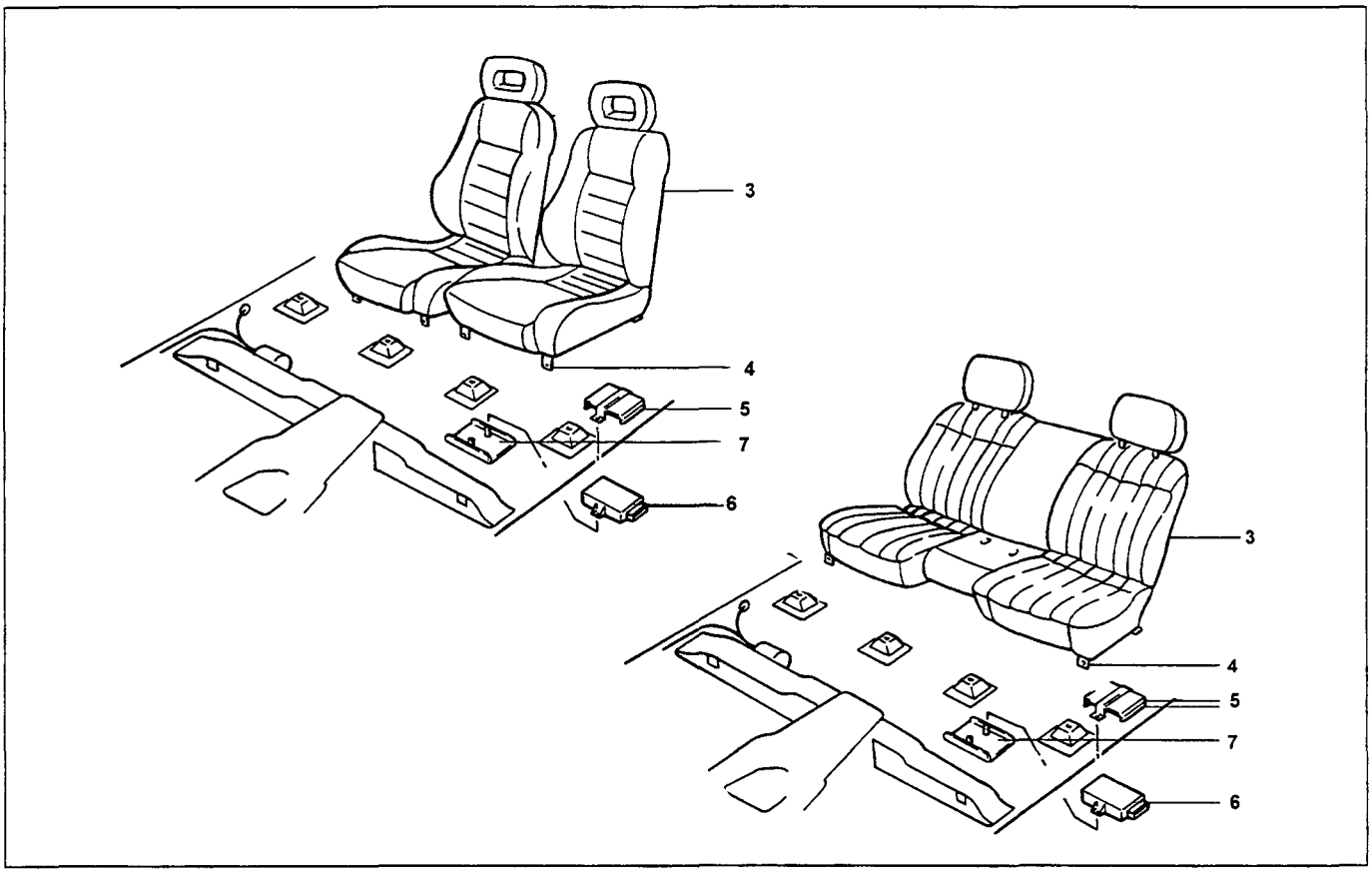

Removal Steps

1. Adjuster cover
2. Bolt
3. Seat assembly
4. Adjuster
5. Upper bracket
6. VSS Control box
7. Lower bracket
8. Diff lock housing

Installation Steps

7. Lower bracket
6. VSS Control box
5. Upper bracket
4. Adjuster
3. Seat assembly
▲ 2. Bolt
1. Adjuster cover

Important Operation – Installation

2. Bolt

Bolt Torque - Nm
35,0 - 45,0 Nm

VSS CONTROL

REMOVAL AND INSTALLATION

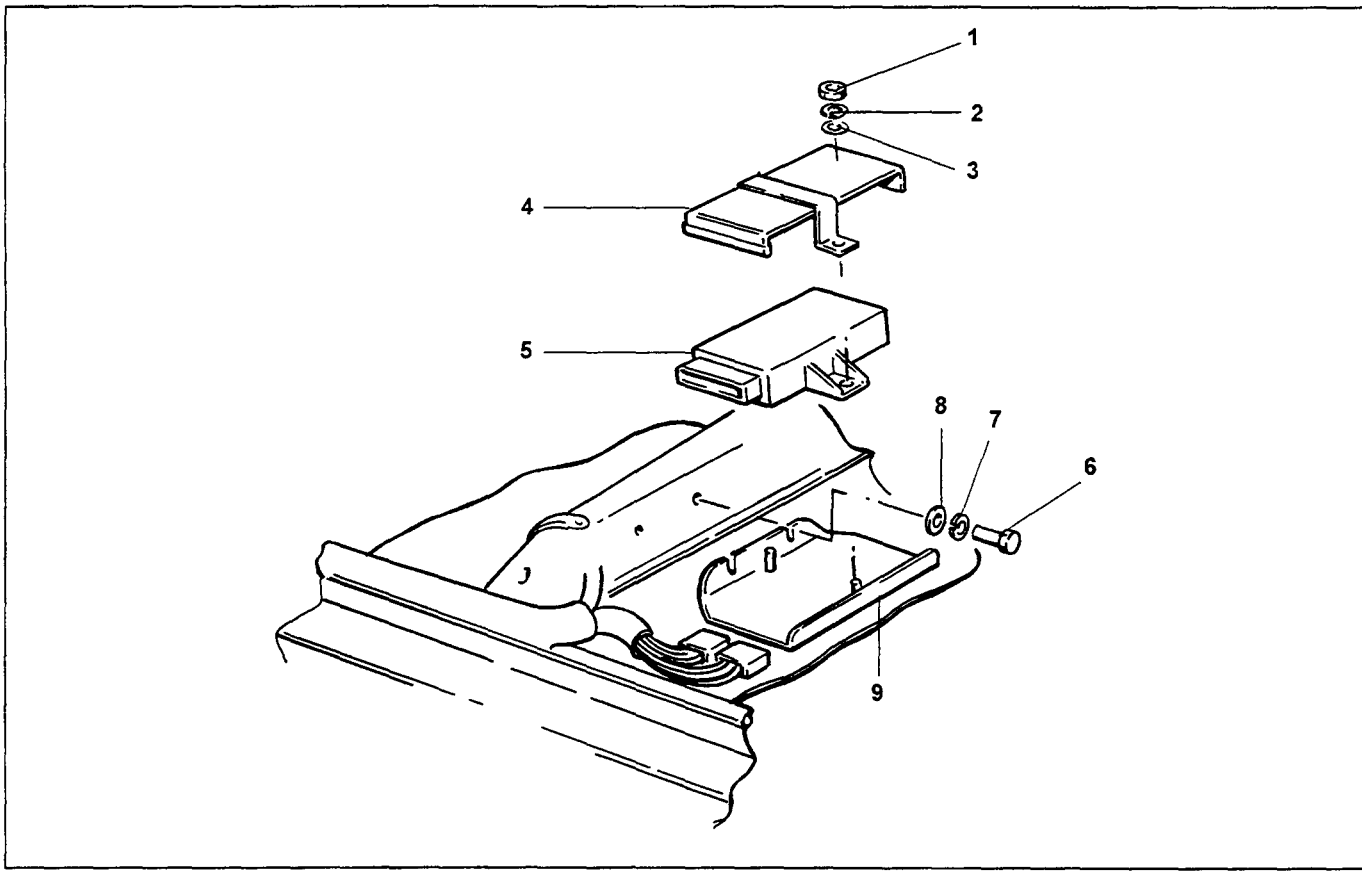

Removal Steps

1. Nut
2. Spring washer
3. Flat washer
4. Vehicle security system upper bracket
5. Vehicle security system control box
6. Bolt
7. Spring washer
8. Flat washer
9. Vehicle security system lower bracket

Installation Steps

9. Vehicle security system lower bracket
8. Flat washer
7. Spring washer
6. Bolt
5. Vehicle security system control box
4. Vehicle security system upper bracket
3. Flat washer
2. Spring washer
1. Nut

REAR SEAT BACKREST

REMOVAL AND INSTALLATION

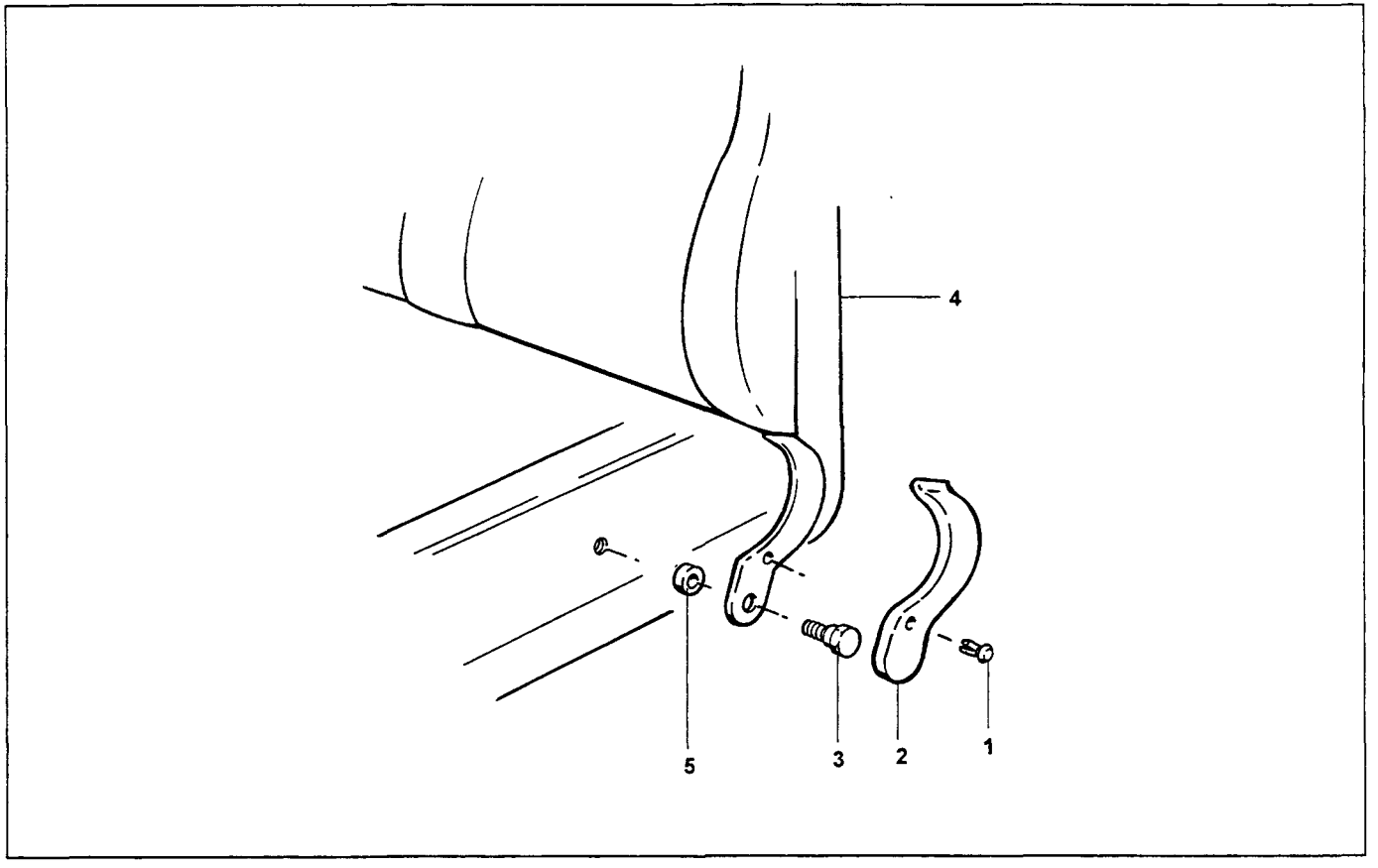

Removal Steps

1. Expansion-rivet
2. Cover-hinge
3. Bolt-shoulder
4. Rear seat back rest assembly
5. Washer-flat 5 mm

Installation Steps

5. Washer-flat 5 mm
4. Rear seat back rest assembly
3. Bolt-shoulder
2. Cover-hinge
1. Expansion-rivet

BODY SIDE MOULDINGS

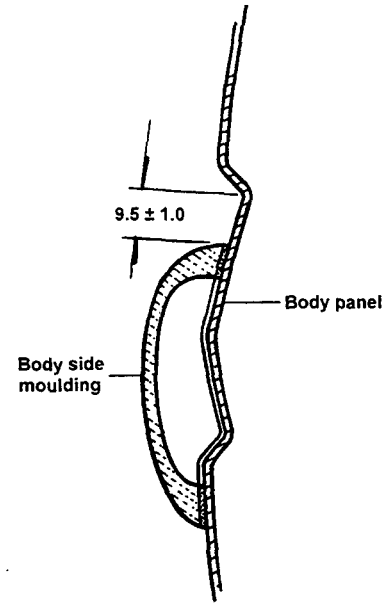

Removal Steps

1. Body side mouldings are fixed to the body by means of adhesive tape, and need to be peeled off the body carefully so as not to damage the moulding - the adhesive tape will however be damaged.
2. Remove remaining adhesive tape from body.

Installation Steps

Removed mouldings can be re-used:

1. Remove remaining adhesive tape from moulding.
2. Clean moulding with benzine.
3. Apply new double sided adhesive tape (max thickness 1,0mm)
4. Clean body side of vehicle with benzine.
5. Locate moulding on body side and mark position in a few places with masking tape.
6. Remove adhesive tape backing.
7. Carefully place moulding onto body next to tape markers.
8. Apply pressure to fix into place.

Note: If brand new mouldings are to be fitted, work from step 4 above.

9. Ensure good alignment of one moulding to another. (And to wheelarch mouldings).

MUDFLAPS

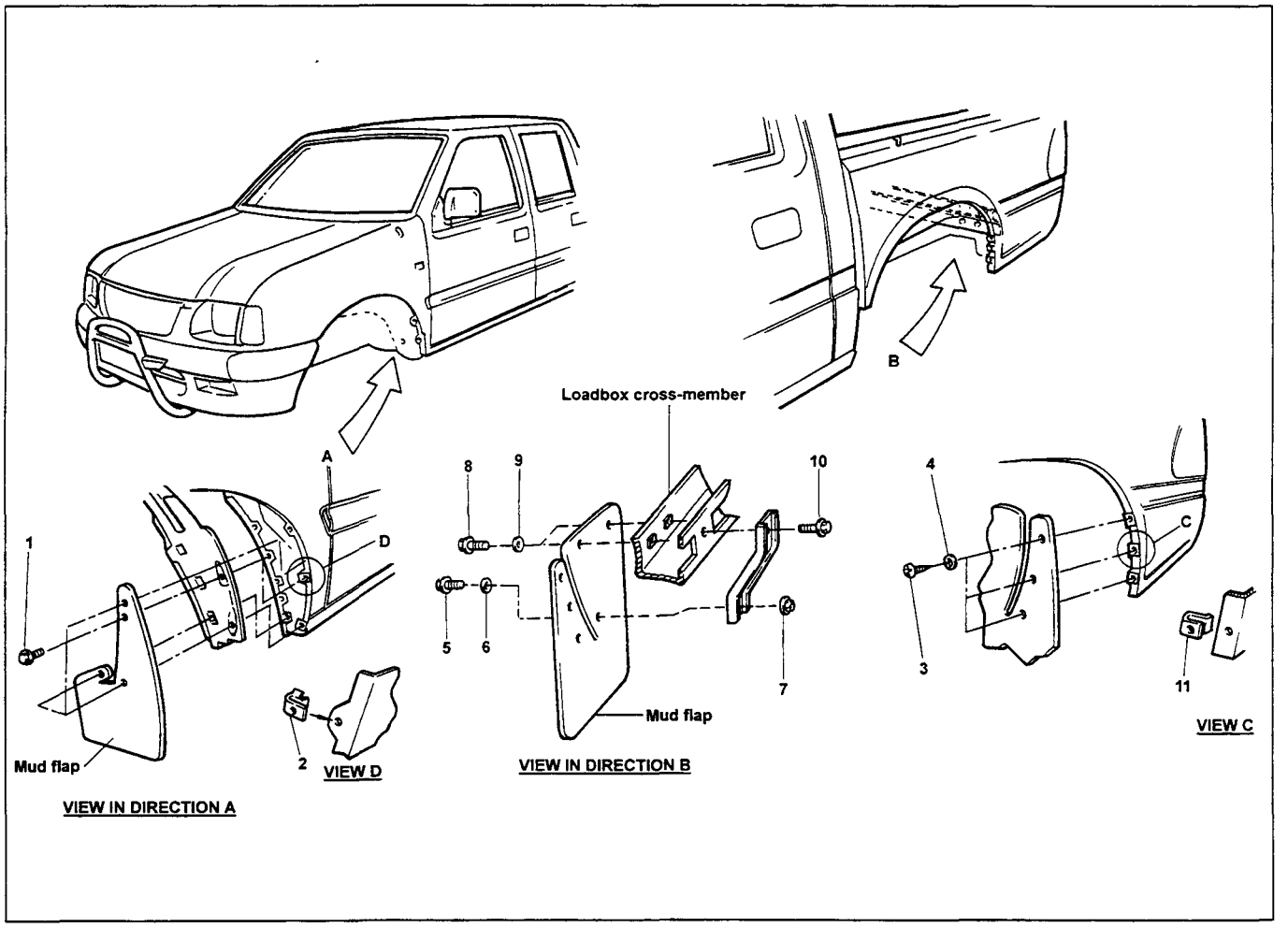

Removal Steps

1. **Front Mudflaps**
   - 1.1 Remove 4 screws (1)
   - 1.2 Remove mudflap

2. **Rear Mudflaps**
   - 2.1 Remove 3 tapping screws & washers (3) (4)
   - 2.2 Remove 1 bolt, washer & nut (5) (6) (7)
   - 2.3 Remove 2 bolts & washers (8) (9)
   - 2.4 Remove mudflap

Installation Steps

1. **Front Mudflaps**
   - 1.1 Ensure 4 spire nuts (2) are correctly located.
   - 1.2 Hold mudflap in position.
   - 1.3 Enter inside screw (1) first, then enter outside screws (1).
   - 1.4 Thighten inside screw and lower outer screw (1).
   - 1.5 Ensure mudflap matches wheelarch shape before tightening upper screws (1).

2. **Rear Mudflaps**
   - 2.1 Loosen upper bolt (10) on mudflap support.
   - 2.2 Check that 3 clipnuts (11) are correctly located.
   - 2.3 Hold mudflap in position and enter 2 upper bolts and washers (8, 9).
   - 2.4 Enter 3 tappings screws and washers
   - 2.5 Enter lower bolt, washer and nut (5, 6, 7).
   - 2.6 Ensure mudflap correctly aligned, then tighten two upper bolts (8) and lower bolt/nut (5,7).
   - 2.7 Tighten tappings screws (3).
   - 2.8 Finally tighten upper support bolt (10).

ROLLBAR

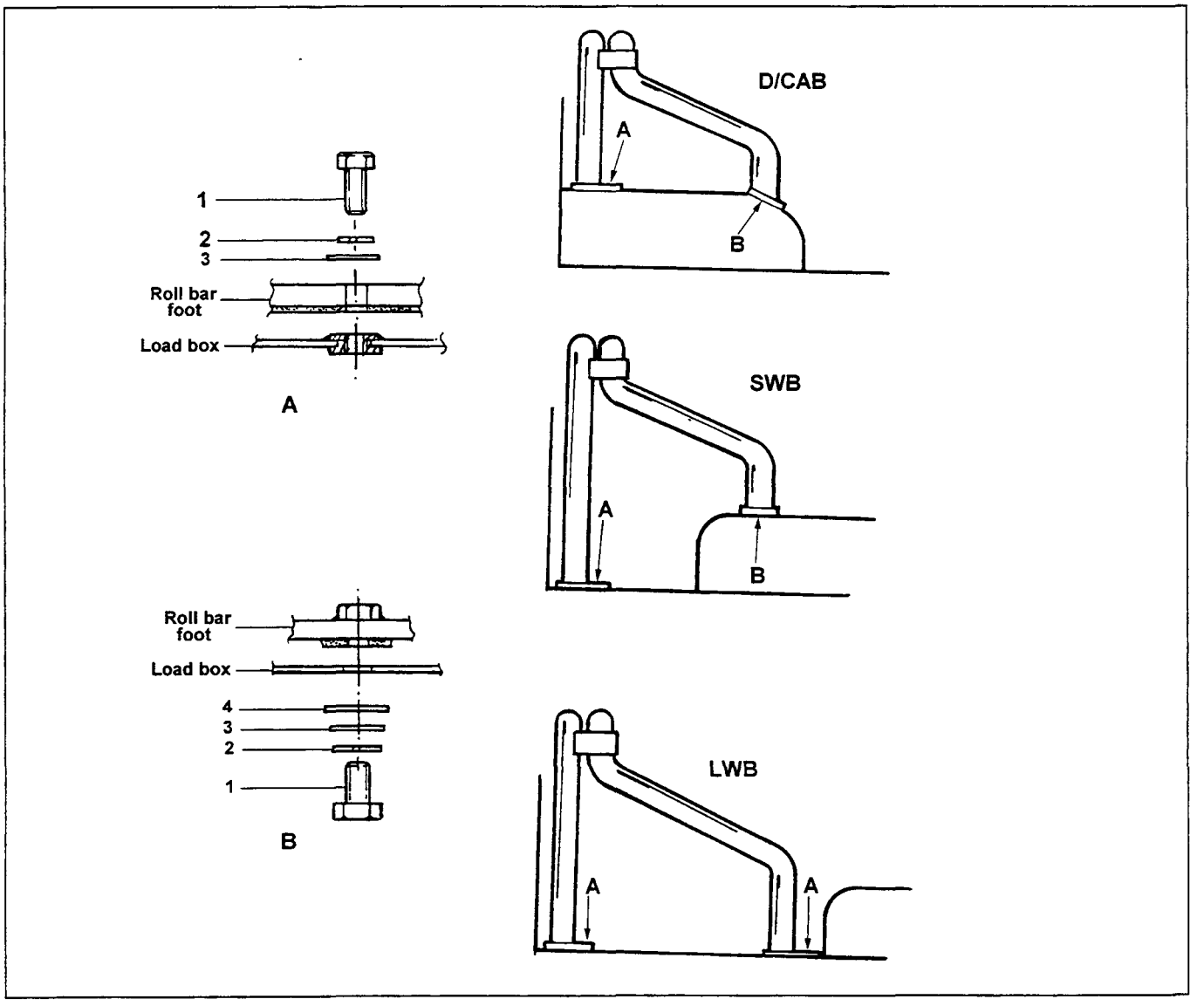

Removal Steps

1. Remove 4 mounting bolts and washers (1) (2) (3) (4)
2. Lift rollbar out of loadbox.

Installation Steps

1. Position rollbar into loadbox.
2. Line up holes in rollbar with holes in loadbox.
3. Enter four bolts/washers (1) (2) (3) (4) - refer sketch for particular mounting method to suit either double cab, single cab, short wheel base or single cab long wheel base.
4. Before finally tightening the bolts, ensure that rollbar is equally spaced in loadbox.
5. Torque mounting bolts to 30 N.m +/- 5,0

GRILLE GUARD

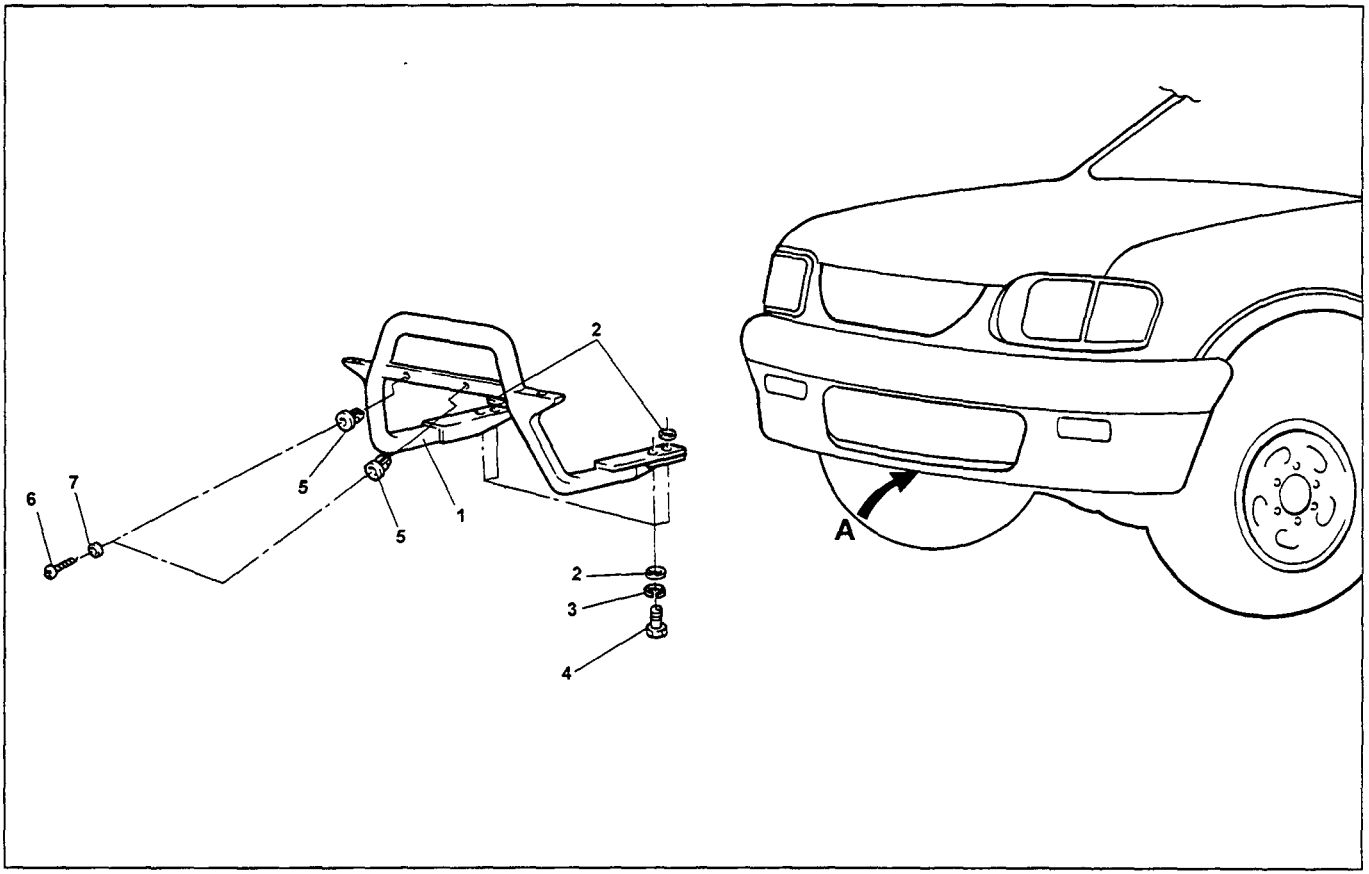

Removal Steps

1. Unplug driving lights from harness (refer section 9)
2. Remove four bolts & washers (4) (3) (2)
3. Note extra washers on rear bolt (5) between grille guard and frame.
4. Remove grille guard.

Installation Steps

1. Hold grille guard in place.
2. Enter front bolts/washers - do not tighten.
3. Slide washers (5) between grille guard mounting and frame.
4. Enter rear bolts/washers.
5. Centralise grille guard on vehicle and tighten the four bolts (torque 25,0 - 34,0)

Note: Additional washers may be fitted between grille guard mounting and frame at the front bolts to align grille guard horizontally with bumper/grille.

6. Re-connect driving lights to harness (refer section 9).

WHEEL-ARCH MOULDINGS

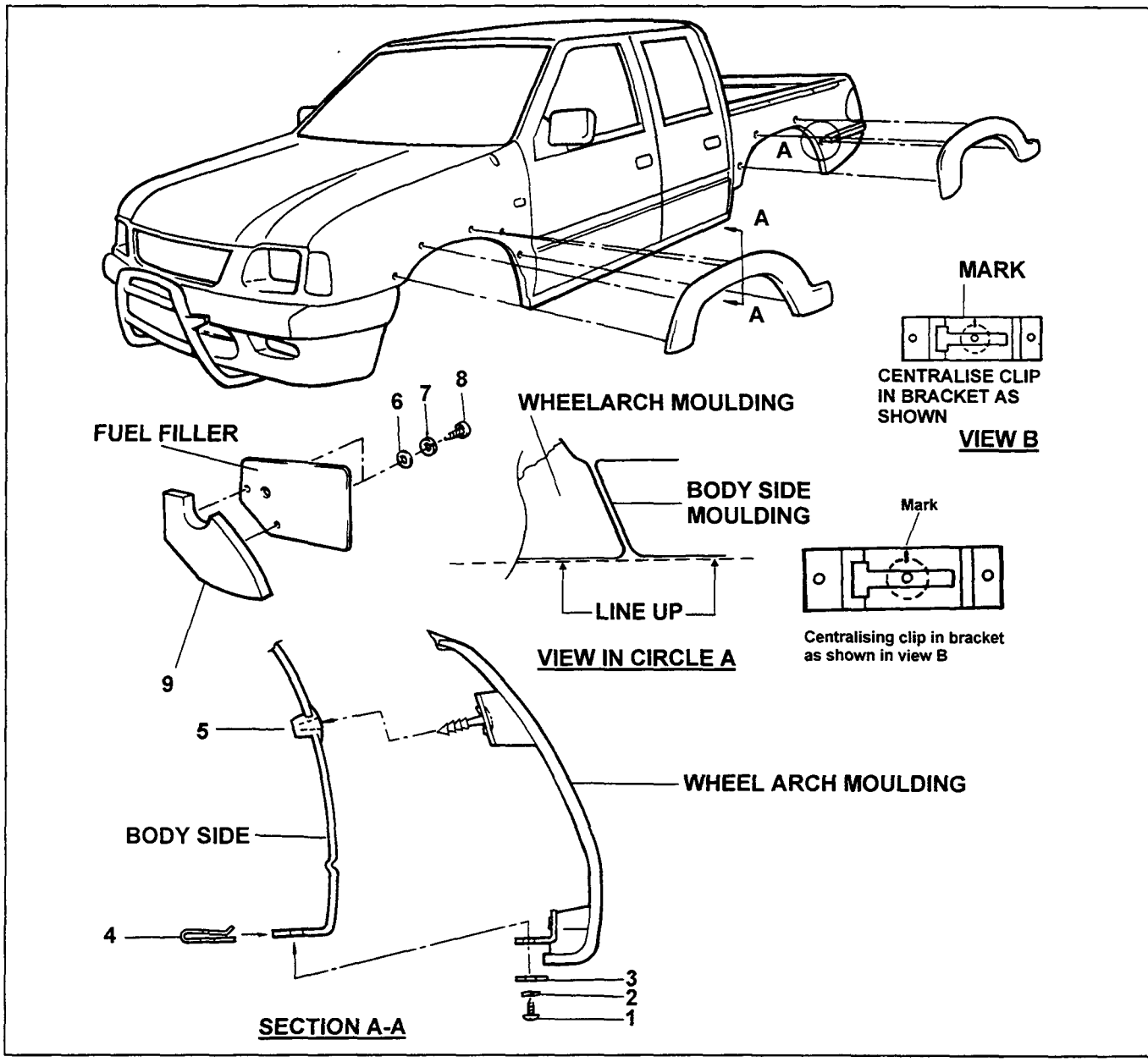

Removal Steps

1. Remove 3 screws/washers (1) (2) (3) underneath moulding.
2. Carefully pull off the moulding from the body - this must be done evenly to preent body damage.
3. Remove 2 screws/washers (6) (7) (8) and remove fuel flap moulding (9).

Installation Steps

1. Ensure that clip is centralised in bracket as shown at arrow B.
2. Align clip with ferrule (5), and push moulding into place.
3. Enter screws/washers (1) (2) (3) into clipnut (4) and tighten , ensuring correct alginment with body side moulding.
4. Fit fuel flap moulding using 2 screws / washers (6) (7) (8).

STONE GUARD

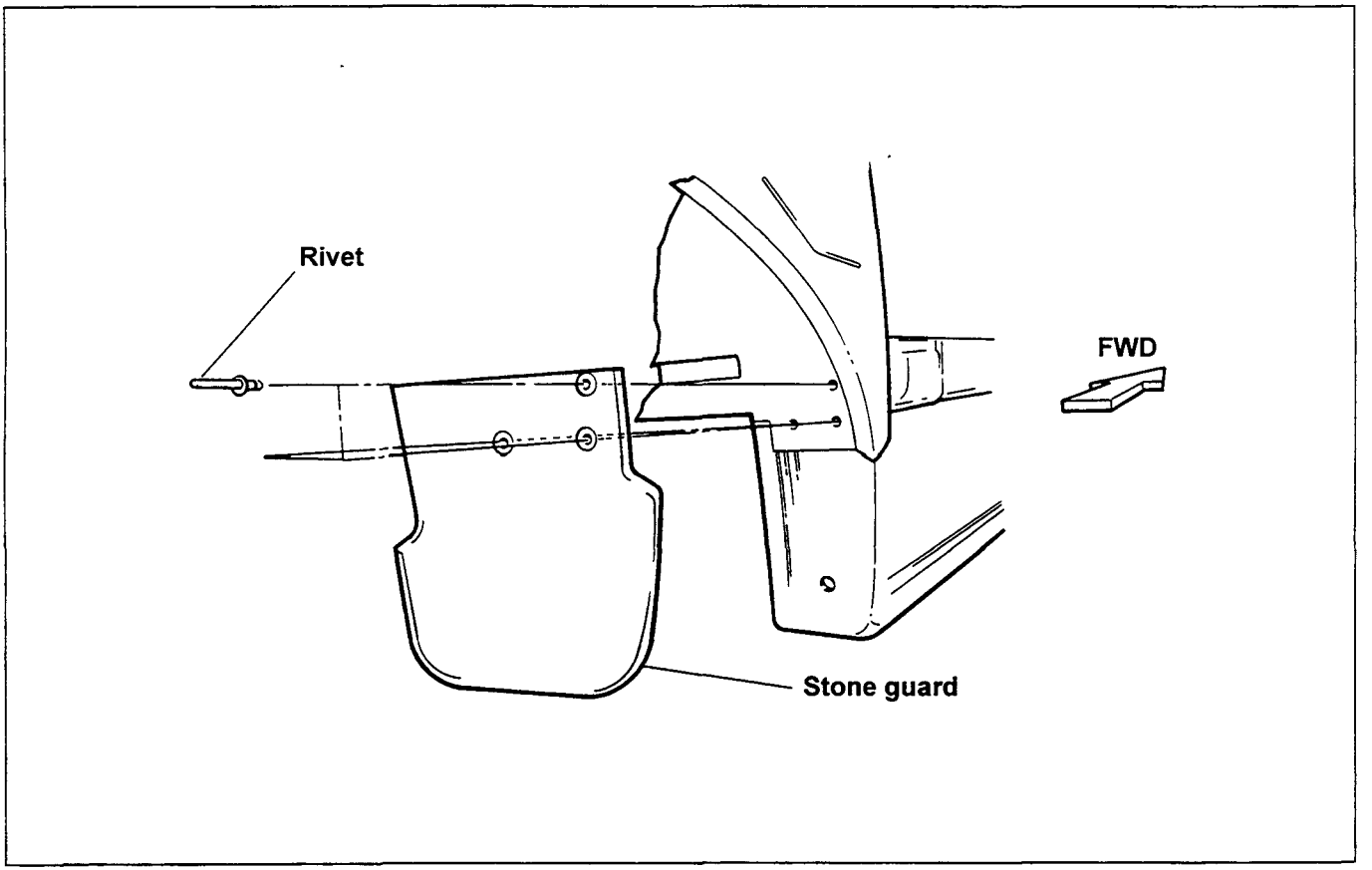

Removal Steps

1. Drill out rivets.
2. Remove stone guard.

Installation Steps

1. Rivet the stone guard in place using suitable rivets. Recommended rivet has shank 4,8, 19,6 long, and a head 16,0.